CONTRACT SUPPLEMENT
SP-37 - Rev. 11/17/16
Prev. Rev. 4/28/14

Daniel Dion
Contract Specialist

860-713-5168
Telephone Number

STATE OF CONNECTICUT

DEPARTMENT OF ADMINISTRATIVE SERVICES
PROCUREMENT DIVISION
450 Columbus Boulevard, Hartford, CT 06103

CONTRACT AWARD NO.: **18PSX0311**
Contract Award Date: 12 March 2019
Bid Due Date: 4 February 2019
SUPPLEMENT DATE: 14 March 2019

CONTRACT AWARD SUPPLEMENT #1

IMPORTANT: THIS IS NOT A PURCHASE ORDER. DO NOT PRODUCE OR SHIP WITHOUT AN AGENCY PURCHASE ORDER.

DESCRIPTION: **Bituminous Concrete Materials**

FOR:	TERM OF CONTRACT:
Department of Transportation, All Using State Agencies, and Political Subdivisions	**March 12, 2019 through December 31, 2020**
	AGENCY REQUISITION NUMBER: 0000134849

CHANGE TO IN STATE (NON-SB) CONTRACT VALUE	CHANGE TO DAS-CERTIFIED SMALL BUSINESS CONTRACT VALUE	CHANGE TO OUT OF STATE CONTRACT VALUE	CHANGE TO TOTAL CONTRACT AWARD VALUE
-	-	-	-

NOTICE TO CONTRACTORS: This notice is not an order to ship. Purchase Orders against contracts will be furnished by the using agency or agencies on whose behalf the contract is made. INVOICE SHALL BE RENDERED DIRECT TO THE ORDERING AGENCY.
NOTE: Dollar amounts listed next to each contractor are possible award amounts, however, they do not reflect any expected purchase amounts (actual or implied). They are for CHRO use only.
NOTICE TO AGENCIES: A complete explanatory report shall be furnished promptly to the Procurement Manager concerning items delivered and/or services rendered on orders placed against awards listed herein which are found not to comply with the specifications or which are otherwise unsatisfactory from the agency's viewpoint, as well as failure of the contractor to deliver within a reasonable period of time specified. Please issue orders and process invoices promptly.
CASH DISCOUNTS: Cash discounts, if any, shall be given SPECIAL ATTENTION, but such cash discount shall not be taken unless payment is made within the discount period.
PRICE BASIS: Unless otherwise noted, prices include delivery and transportation charges fully prepaid f.o.b. agency. No extra charge is to be made for packing or packages.

PLEASE NOTE:

Supplement #1 is issued to post the corrected Exhibit B1- Price Schedule for O & G Industries, Inc. All terms and conditions not otherwise affected by this supplement remain unchanged and in full force and effect.

DEPARTMENT OF ADMINISTRATIVE SERVICES

By:_____
(Original Signature on Document in Procurement Files)
Name: **DANIEL DION**
Title: Contract Specialist
Date:

Exhibit - B1		BITUMINOUS CONCRETE MATERIALS - PICK UP										
Contract #: 18PSX0311		Net Price Per Ton At Plant Loaded Into Customer's Truck										
Awarded Contractor	Plant Location	S0.25 Level 1-3	S0.375 Level 1-3	S0.5 Level 1-3	S1 Level 1-3	Curb Mix	Cold Patch (without fibers) Class 5	Cold Patch (with polypropylene fibers) Class 5A	Cold Patch (with polyester fibers) Class 5B	EZ Street Cold Patch	Greenpatch	Quality Pavement Repair
A.E.N. Asphalt Inc.	45 Lebanon Road, Franklin, CT	$ 79.00	$ 79.00	$ 74.00	$ 74.00	$ 85.00	No Bid	No Bid	No Bid	No Bid	No Bid	No Bid
Adelman Sand & Gravel Inc.	34 Bozrah Street, Bozrah, CT	No Bid	No Bid	No Bid	No Bid	No Bid	No Bid	No Bid	No Bid	No Bid	No Bid	$ 125.00
American Industries, Inc.	630 Plainfield Road, Jewett City, CT	$ 85.00	$ 85.00	$ 80.00	$ 80.00	$ 85.00	No Bid	No Bid	No Bid	No Bid	No Bid	No Bid
B. Metcalf Asphalt Paving Inc.	235 East Canaan Road, North Canaan, CT	No Bid	No Bid	No Bid	No Bid	No Bid	$ 108.00	No Bid	No Bid	No Bid	No Bid	No Bid
Galasso Materials LLC	60 South Main Street, East Granby, CT 06026	$ 71.28	$ 70.54	$ 67.25	$ 67.20	$ 78.20	No Bid	No Bid	No Bid	No Bid	$ 110.00	No Bid
Hain Materials Corp	249 Windham Center Road, Windham, CT	$ 87.00	$ 81.25	$ 76.50	No Bid	$ 88.00	No Bid	No Bid	No Bid	No Bid	No Bid	No Bid
JSL Asphalt Inc	75 King Spring, Windsor Locks, CT	$ 83.70	$ 76.70	$ 73.70	$ 76.70	$ 85.00	No Bid	No Bid	No Bid	No Bid	No Bid	No Bid
Killingly Asphalt Products, LLC	514 Wildwood Avenue, Dayville, CT	$ 82.00	$ 81.00	$ 77.50	$ 77.50	$ 87.50	No Bid	No Bid	No Bid	No Bid	No Bid	No Bid
Laydon Industries, LLC	7 Spring Street, West Haven, CT	No Bid	No Bid	No Bid	No Bid	No Bid	No Bid	No Bid	No Bid	No Bid	$ 133.20	No Bid
O & G Industries, Inc.	Bridgeport, CT	$ 84.20	$ 84.20	$ 79.48	$ 79.99	$ 93.58	$ 141.00	No Bid	$ 156.00	No Bid	$ 135.00	No Bid
O & G Industries, Inc.	Canal Street, Stamford, CT	$ 85.87	$ 86.13	$ 80.78	$ 80.78	$ 95.00	No Bid	No Bid	No Bid	No Bid	No Bid	No Bid
O & G Industries, Inc.	Davenport Street, Stamford, CT	$ 85.87	$ 86.13	$ 80.78	$ 80.78	$ 95.00	$ 150.00	No Bid	$ 165.00	No Bid	$ 135.00	No Bid
O & G Industries, Inc.	Southbury, CT	$ 75.45	$ 75.75	$ 73.70	$ 73.70	$ 90.02	$ 130.00	No Bid	$ 145.00	No Bid	$ 135.00	No Bid
O & G Industries, Inc.	Waterbury, CT	$ 79.93	$ 79.93	$ 75.87	$ 75.87	$ 90.67	No Bid	No Bid	No Bid	No Bid	$ 135.00	No Bid
O & G Industries, Inc.	New Milford, CT	$ 76.61	$ 77.20	$ 75.33	$ 75.33	$ 90.76	No Bid	No Bid	No Bid	No Bid	No Bid	No Bid
O & G Industries, Inc.	Harwinton/ Torrington, CT	$ 78.92	$ 78.25	$ 73.81	$ 73.81	$ 88.85	$ 140.00	No Bid	$ 155.00	No Bid	$ 135.00	No Bid
Palmer Paving Corporation	25 Blanchard Street, Palmer, MA	$ 83.50	$ 77.50	$ 72.50	No Bid	$ 79.50	No Bid	No Bid	No Bid	No Bid	No Bid	No Bid
Palmer Paving Corporation	1000 Page Boulevard, Springfield, MA	$ 83.50	$ 77.50	$ 72.50	No Bid	$ 79.50	No Bid	No Bid	No Bid	No Bid	No Bid	No Bid

Exhibit - B1		BITUMINOUS CONCRETE MATERIALS - PICK UP										
Contract #: 18PSX0311		Net Price Per Ton At Plant Loaded Into Customer's Truck										
Awarded Contractor	Plant Location	S0.25 Level 1-3	S0.375 Level 1-3	S0.5 Level 1-3	S1 Level 1-3	Curb Mix	Cold Patch (without fibers) Class 5	Cold Patch (with polypropylene fibers) Class 5A	Cold Patch (with polyester fibers) Class 5B	EZ Street Cold Patch	Greenpatch	Quality Pavement Repair
The L. Suzio Asphalt Co., Inc.	Meriden, CT	$ 87.00	$ 87.00	$ 87.00	$ 87.00	$ 96.00	$ 125.00	No Bid	No Bid	No Bid	No Bid	No Bid
Tilcon Connecticut Inc.	North Branford, CT	$ 87.45	$ 85.17	$ 79.21	$ 77.71	$ 95.50	No Bid	No Bid	No Bid	No Bid	No Bid	$ 123.95
Tilcon Connecticut Inc.	Newtown, CT	No Bid	No Bid	No Bid	No Bid	$ 101.19	No Bid	No Bid	No Bid	No Bid	No Bid	No Bid
Tilcon Connecticut Inc.	Waterbury, CT	$ 81.19	$ 78.21	$ 73.34	$ 71.00	$ 94.76	No Bid	No Bid	No Bid	No Bid	No Bid	No Bid
Tilcon Connecticut Inc.	Hamden, CT	No Bid	No Bid	No Bid	No Bid	$ 97.79	No Bid	No Bid	No Bid	No Bid	No Bid	No Bid
Tilcon Connecticut Inc.	Plainville/ New Britain, CT	$ 85.61	$ 84.41	$ 78.27	$ 76.13	$ 94.23	No Bid	No Bid	No Bid	No Bid	No Bid	$ 123.95
Tilcon Connecticut Inc.	Wallingford, CT	$ 87.06	$ 84.80	$ 79.95	$ 76.94	$ 94.41	No Bid	No Bid	No Bid	No Bid	No Bid	No Bid
Tilcon Connecticut Inc.	Manchester, CT	$ 88.89	$ 87.66	$ 81.32	$ 79.13	$ 95.92	No Bid	No Bid	No Bid	No Bid	No Bid	No Bid
Tilcon Connecticut Inc.	Old Saybrook, CT	No Bid	No Bid	No Bid	No Bid	$ 95.59	No Bid	No Bid	No Bid	No Bid	No Bid	No Bid
Tilcon Connecticut Inc.	Danbury, CT	$ 87.39	$ 85.09	$ 79.05	$ 77.87	$ 97.64	No Bid	No Bid	No Bid	No Bid	No Bid	$ 126.95
Tilcon Connecticut Inc.	Groton, CT	$ 79.49	$ 78.94	$ 72.39	No Bid	No Bid	No Bid	No Bid	No Bid	No Bid	No Bid	No Bid
Wescon Corp of Conn.	36 Elmata Avenue, Pawcatuck, CT	$ 70.00	$ 70.00	$ 70.00	$ 70.00	$ 74.00	No Bid	No Bid	No Bid	No Bid	No Bid	No Bid

CONTRACT AWARD
SP-38 - Rev. 11/17/16
Prev. Rev. 5/21/14

Daniel Dion
Contract Specialist

860-713-5168
Telephone Number

STATE OF CONNECTICUT

DEPARTMENT OF ADMINISTRATIVE SERVICES

PROCUREMENT DIVISION

450 Columbus Boulevard, Hartford, CT 06103

CONTRACT AWARD NO.:
18PSX0311
Contract Award Date:
12 March 2019
Bid Due Date:
4 February 2019

CONTRACT AWARD

IMPORTANT: THIS IS NOT A PURCHASE ORDER. DO NOT PRODUCE OR SHIP WITHOUT AN AGENCY PURCHASE ORDER.

DESCRIPTION:
Bituminous Concrete Materials

FOR:
Department of Transportation, All Using State Agencies, and Political Subdivisions

TERM OF CONTRACT:
March 12, 2019 through December 31, 2020

AGENCY REQUISITION NUMBER: 0000134849

IN STATE (NON-SB) CONTRACT VALUE	DAS *CERTIFIED* SMALL BUSINESS CONTRACT VALUE	OUT OF STATE CONTRACT VALUE	TOTAL CONTRACT AWARD VALUE
$2,785,714.23 EST		$214,285.71 EST	$3,000,000.00 EST

NOTICE TO CONTRACTORS: This notice is not an order to ship. Purchase Orders against contracts will be furnished by the using agency or agencies on whose behalf the contract is made. INVOICE SHALL BE RENDERED DIRECT TO THE ORDERING AGENCY.
NOTE: Dollar amounts listed next to each contractor are possible award amounts, however, they do not reflect any expected purchase amounts (actual or implied). They are for CHRO use only.
NOTICE TO AGENCIES: A complete explanatory report shall be furnished promptly to the Procurement Manager concerning items delivered and/or services rendered on orders placed against awards listed herein which are found not to comply with the specifications or which are otherwise unsatisfactory from the agency's viewpoint, as well as failure of the contractor to deliver within a reasonable period of time specified. Please issue orders and process invoices promptly.
CASH DISCOUNTS: Cash discounts, if any, shall be given SPECIAL ATTENTION, but such cash discount shall not be taken unless payment is made within the discount period.
PRICE BASIS: Unless otherwise noted, prices include delivery and transportation charges fully prepaid f.o.b. agency. No extra charge is to be made for packing or packages.

CONTRACTOR INFORMATION:
REFER TO THE CONTRACT ON THE DAS PROCUREMENT WEB PAGE FOR THE MOST CURRENT CONTRACTOR INFORMATION. (http://das.ct.gov/mp1.aspx?page=8)

Company Name: **A.E.N. Asphalt, Inc.**
Company Address: **45 Lebanon Road, Franklin, CT 06254**
Tel. No.: **(860)885-0500** *Fax No.:* **(860)889-8466** *Contract Value:* **$214,285.71 EST**
Contact Person: **Linda Adelman** *Delivery:* ***N/A***
Contact Person Address: **34 Bozrah Street Bozrah, CT 06334**
Company E-mail Address and/or Company Web Site: **Bozrahsss@aol.com**
Certification Type (SBE,MBE or None): **None** *Agrees to Supply Political SubDivisions:* **Yes**
Prompt Payment Terms: **0% 00 Net 45**

Company Name: **Adelman Sand & Gravel, Inc.**
Company Address: **34 Bozrah Street, Bozrah, CT**
Tel. No.: **(860)334-6269** *Contract Value:* **$214,285.71 EST**
Contact Person: **Linda Adelman** *Delivery:* ***N/A***
Contact Person Address: **Same as above**
Company E-mail Address and/or Company Web Site: **Bozrahsss@aol.com**
Certification Type (SBE,MBE or None): **None** *Agrees to Supply Political SubDivisions:* **Yes**
Prompt Payment Terms: **0% 00 Net 45**

Company Name: **American Industries, Inc.**
Company Address: **630 Plainfield Road, Jewett City, CT 06351**
Tel. No.: **(860)376-2537** *Fax No.:* **(860)376-3909** *Contract Value:* **$214,285.71 EST**
Contact Person: **Cale Carnot** *Delivery:* ***N/A***
Contact Person Address: **Same as above**
Company E-mail Address and/or Company Web Site: **ccarnot@americanind.net**
Certification Type (SBE,MBE or None): **None** *Agrees to Supply Political SubDivisions:* **Yes**
Prompt Payment Terms: **0% 00 Net 45**

Company Name: **B. Metcalf Asphalt Paving Inc.**
Company Address: **104 Interlaken Road, Lakeville, CT 06039**
Tel. No.: **(860)435-1205** *Contract Value:* **$214,285.71 EST**
Contact Person: **Benjamin Metcalf** *Delivery:* ***As required***
Contact Person Address: **Same as above**
Company E-mail Address and/or Company Web Site: **bmetcalfasphalt@sbcglobal.net / www.bmetcalfasphalt.com**
Certification Type (SBE,MBE or None): **None** *Agrees to Supply Political SubDivisions:* **Yes**
Prompt Payment Terms: **0% 00 Net 45**

Company Name: **Galasso Materials, LLC**
Company Address: **60 South Main Street, East Granby, CT 06026**
Tel. No.: **(860)653-2524** *Contract Value:* **$214,285.71 EST**
Contact Person: **Craig Timpson** *Delivery:* ***As required***
Contact Person Address: **Same as above**
Company E-mail Address and/or Company Web Site: **ctimpson@galassomaterials.com**
Certification Type (SBE,MBE or None): **None** *Agrees to Supply Political SubDivisions:* **Yes**
Prompt Payment Terms: **0% 00 Net 45**

Company Name: **Hain Materials Corp.**
Company Address: **249 Windham Center Road, P.O. Box 245, Windham, CT 06280-0245**
Tel. No.: **(860)423-9691** *Fax No.:* **(860) 423-0694** *Contract Value:* **$214,285.71 EST**
Contact Person: **Patrick Carey** *Delivery:* ***N/A***
Contact Person Address: **Same as above**
Company E-mail Address and/or Company Web Site: **pcarey@hainmaterials.com**
Certification Type (SBE,MBE or None): **None** *Agrees to Supply Political SubDivisions:* **Yes**
Prompt Payment Terms: **0% 00 Net 45**

Company Name: **JSL Asphalt Inc**
Company Address: **75 King Spring Road, Windsor Locks, CT 06096**
Tel. No.: **(413)568-8986** *Fax No.:* **(413)562-7651** *Contract Value:* **$214,285.71 EST**
Contact Person: **Scott Coviello** *Delivery:* ***N/A***
Contact Person Address: **730 East Mountain Road, Westfield, MA 01085**
Company E-mail Address and/or Company Web Site: **scoviello@jslane.com / www.jslane.com**
Certification Type (SBE,MBE or None): **None** *Agrees to Supply Political SubDivisions:* **Yes**
Prompt Payment Terms: **0% 00 Net 45**

Company Name: **Killingly Asphalt Products LLC**
Company Address: **514 Wildwood Avenue, Dayville, CT 06241**
Tel. No.: **(413)665-7021** *Fax No.:* **(413)665-9027** *Contract Value:* **$214,285.71 EST**

Contact Person: **James Tudryn** *Delivery:* ***N/A***
Contact Person Address: **Same as above**
Company E-mail Address and/or Company Web Site: **jim.tudryn@asmg.com / www.asmg.com**
Certification Type (SBE,MBE or None): **None** *Agrees to Supply Political SubDivisions:* **Yes**
Prompt Payment Terms: **0% 00 Net 45**

Company Name: **Laydon Industries, LLC**
Company Address: **51 Longhini Lane, New Haven, CT 06519**
Tel. No.: **(203)562-7283** *Fax No.:* **(203)562-7200** *Contract Value:* **$214,285.71 EST**
Contact Person: **Kristy Laydon** *Delivery:* ***As required***
Contact Person Address: **Same as above**
Company E-mail Address and/or Company Web Site: **info@laydonindustries.com / www.laydonindustries.com**
Certification Type (SBE,MBE or None): **None** *Agrees to Supply Political SubDivisions:* **Yes**
Prompt Payment Terms: **0% 00 Net 45**

Company Name: **O & G Industries, Inc.**
Company Address: **112 Wall Street, Torrington, CT 06790-5464**
Tel. No.: **(860)626-6439** *Fax No.:* **(860)626-6458** *Contract Value:* **$214,285.71 EST**
Contact Person: **Holly Hunt** *Delivery:* ***As required***
Contact Person Address: **Same as above**
Company E-mail Address and/or Company Web Site: **hollyhunt@ogind.com / www.ogind.com**
Certification Type (SBE,MBE or None): **None** *Agrees to Supply Political SubDivisions:* **Yes**
Prompt Payment Terms: **0% 00 Net 45**

Company Name: **Palmer Paving Corporation**
Company Address: **25 Blanchard Street, Palmer, MA 01069**
Tel. No.: **413-283-8354** *Contract Value:* **$214,285.71 EST**
Contact Person: **Fred Hugli** *Delivery:* ***N/A***
Contact Person Address: **Same as above**
Company E-mail Address and/or Company Web Site: **fhugli@palmerpaving.com**
Certification Type (SBE,MBE or None): **None** *Agrees to Supply Political SubDivisions:* **Yes**
Prompt Payment Terms: **0% 00 Net 45**

Company Name: **The L. Suzio Asphalt Co., Inc.**
Company Address: **975 Westfield Road, P.O. Box 748, Meriden, CT 06450**
Tel. No.: **(203) 237-8421** *Contract Value:* **$214,285.71 EST**
Contact Person: **Cheryl Suzio** *Delivery:* ***N/A***
Contact Person Address: **Same as above**
Company E-mail Address and/or Company Web Site: **casuzio@suzioyorkhill.com / bdykty@suzioyorkhill.com**
Certification Type (SBE,MBE or None): **None** *Agrees to Supply Political SubDivisions:* **Yes**
Prompt Payment Terms: **0% 00 Net 45**

Company Name: **Tilcon Connecticut Inc.**
Company Address: **301 Hartford Avenue, Newington, CT 06111**
Tel. No.: **(860)224-6011** *Contract Value:* **$214,285.71 EST**
Contact Person: **Richard Birge** *Delivery:* ***As required***
Contact Person Address: **Same as above**
Company E-mail Address and/or Company Web Site: **rbirge@Tilcon-inc.com / www.tilconct.com**

Certification Type (SBE,MBE or None):

Agrees to Supply Political SubDivisions: **Yes**

Prompt Payment Terms: **0% 00 Net 45**

Company Name: **Wescon Corp. of Conn.**
Company Address: **36 Elmata Avenue, Pawcatuck, CT 06379**
Tel. No.: **(860)599-2500** *Fax No.:*
Contract Value: **$214,285.71 EST**
Contact Person: **David Lynch, Sr.**
Delivery: ***N/A***
Contact Person Address: **Same as above**
Company E-mail Address and/or Company Web Site: **scullen@jhlynch.com**
Certification Type (SBE,MBE or None): **None**
Agrees to Supply Political SubDivisions: **Yes**
Prompt Payment Terms: **0% 00 Net 45**

The signature below by the DAS Procurement Director is evidence that the Contractor's solicitation response has/have been accepted and that the Contractor(s) and DAS are bound by all of the terms and conditions of the Contract.

DEPARTMENT OF ADMINISTRATIVE SERVICES

By:_____
(Original Signature on Document in Procurement Files)
Name: **DANIEL DION**
Title: Contract Specialist
Date:

DEPARTMENT OF ADMINISTRATIVE SERVICES

By:_____
(Original Signature on Document in Procurement Files)
Name: **CAROL WILSON**
Title: Procurement Director
Date:

18PSX0311- Bituminous Concrete Materials

Contract Usage Instructions

This is a multiple award contract. When selecting a Contractor for Bituminous Concrete Materials- Pick Up, the Client Agency shall issue a purchase order based on the material availability, material cost, and the associated travel time and mileage to the plant.

The Bituminous Concrete Materials- Delivered is awarded to specific Contractors based on DOT Sections. Please refer to Attachment 2- DOT Maintenance Section Map for geographic limits.

CONTRACT #18PSX0311

Between

THE STATE OF CONNECTICUT

Acting by its

DEPARTMENT OF ADMINISTRATIVE SERVICES

AND

A.E.N. Asphalt, Inc., Adelman Sand & Gravel, Inc., American Industries, Inc., B. Metcalf Asphalt Paving Inc., Galasso Materials, LLC, Hain Materials Corp., JSL Asphalt, Inc., Killingly Asphalt Products, LLC, Laydon Industries, LLC, O & G Industries, Inc., Palmer Paving Corporation, The L. Suzio Asphalt Company, Incorporated, Tilcon Connecticut Inc., and Wescon Corp. of Conn.

Awarded Contractors

BITUMINOUS CONCRETE MATERIALS

Contract Table of Contents

1. Definitions
2. Term of Contract; Contract Extension
3. Description of Goods and Services
4. Price Schedule, Payment Terms and Billing, and Price Adjustments
5. Rejected Items; Abandonment
6. Order and Delivery
7. Contract Amendments
8. Assignment
9. Termination
10. Cost Modifications
11. Breach
12. Waiver
13. Open Market Purchases
14. Purchase Orders
15. Indemnification
16. Forum and Choice of Law
17. Contractor Guaranties
18. Implied Warranties
19. Goods, Standards and Appurtenances
20. Delivery
21. Goods Inspection
22. Emergency Standby for Goods and/or Services
23. Setoff
24. Force Majeure
25. Advertising
26. Americans With Disabilities Act
27. Representations and Warranties
28. Representations and Warranties Concerning Motor Vehicles
29. Disclosure of Contractor Parties Litigation
30. Entirety of Contract
31. Exhibits
32. Executive Orders
33. Non-Discrimination
34. Tangible Personal Property
35. Whistleblowing
36. Notice
37. Insurance
38. Headings
39. Number and Gender
40. Parties
41. Contractor Changes
42. Further Assurances
43. Audit and Inspection of Plants, Places of Business and Records
44. Background Checks
45. Continued Performance
46. Working and Labor Synergies
47. Contractor Responsibility
48. Severability
49. Confidential Information
50. References to Statutes, Public Acts, Regulations, Codes and Executive Orders
51. Cross-Default
52. Disclosure of Records
53. Summary of State Ethics Laws
54. Sovereign Immunity
55. Time of the Essence
56. Reserved
57. Campaign Contribution Restriction
58. Reserved
59. Protection of Confidential Information
60. Antitrust
61. Reserved

EXHIBIT A - Description of Goods & Services and Additional Terms and Conditions

EXHIBIT B1 & B2 - Price Schedule

EXHIBIT C - Notice to Executive Branch State Contractors and Prospective State Contractors of Campaign Contribution and Solicitation Limitations

EXHIBIT D- Prevailing Wage Schedule

ATTACHMENT 1- Bituminous Concrete Standards

ATTACHMENT 2- DOT Maintenance Section Map

ATTACHMENT 3- Bituminous Concrete Materials Plant and Delivery Information

This Contract (the "Contract") is made as of the Effective Date shown on the contract award form, number SP-38 corresponding to the subject procurement and is by and between, the contractor identified on such Form SP-38 (the "Contractor,") which is attached and shall be considered a part of this Contract, with a principal place of business as indicated on the signature page form, number SP-26, acting by the duly authorized representative as indicated on the SP-26, and the State of Connecticut, Department of Administrative Services ("DAS"), with a principal place of business at 450 Columbus Boulevard, Hartford, Connecticut 06103, acting by Daniel Dion, its Contract Specialist, in accordance with Sections 4a-2 and 4a-51 of the Connecticut General Statutes.

Now therefore, in consideration of these presents, and for other good and valuable consideration, the receipt and sufficiency of which the parties acknowledge, the Contractor and the State agree as follows:

1. Definitions. Unless otherwise indicated, the following terms shall have the following corresponding definitions:

(a) Bid: A submittal in response to an Invitation to Bid.

(b) Claims: All actions, suits, claims, demands, investigations and proceedings of any kind, open, pending or threatened, whether mature, unmatured, contingent, known or unknown, at law or in equity, in any forum.

(c) Client Agency: Any department, commission, board, bureau, agency, institution, public authority, office, council, association, instrumentality or political subdivision of the State of Connecticut, as applicable, who is authorized and chooses to make purchases under, and pursuant to the terms and conditions of, this Contract.

(d) Confidential Information: This shall mean any name, number or other information that may be used, alone or in conjunction with any other information, to identify a specific individual including, but not limited to, such individual's name, date of birth, mother's maiden name, motor vehicle operator's license number, Social Security number, employee identification number, employer or taxpayer identification number, alien registration number, government passport number, health insurance identification number, demand deposit account number, savings account number, credit card number, debit card number or unique biometric data such as fingerprint, voice print, retina or iris image, or other unique physical representation. Without limiting the foregoing, Confidential Information shall also include any information that the Client Agency or DAS classifies as "confidential" or "restricted." Confidential Information shall not include information that may be lawfully obtained from publicly available sources or from federal, state, or local government records which are lawfully made available to the general public.

(e) Confidential Information Breach: This shall mean, generally, an instance where an unauthorized person or entity accesses Confidential Information in any manner, including but not limited to the following occurrences: (1) any Confidential Information that is not encrypted or protected is misplaced, lost, stolen or in any way compromised; (2)one or more third parties have had access to or taken control or possession of any Confidential Information that is not encrypted or protected without prior written authorization from the State; (3) the unauthorized acquisition of encrypted or protected Confidential Information together with the confidential process or key that is capable of compromising the integrity

of the Confidential Information; or (4) if there is a substantial risk of identity theft or fraud to the Client Agency, the Contractor, DAS or State.

(f) Contract: The agreement, as of its Effective Date, between the Contractor and the State for any or all Goods or Services at the Bid price.

(g) Contractor: A person or entity who submits a Bid and who executes a Contract.

(h) Contractor Parties: A Contractor's members, directors, officers, shareholders, partners, managers, principal officers, representatives, agents, servants, consultants, employees or any one of them or any other person or entity with whom the Contractor is in privity of oral or written contract and the Contractor intends for such other person or entity to Perform under the Contract in any capacity.

(i) Day: All calendar days other than Saturdays, Sundays and days designated as national or State of Connecticut holidays upon which banks in Connecticut are closed.

(j) Force Majeure: Events that materially affect the cost of the Goods or Services or the time schedule within which to Perform and are outside the control of the party asserting that such an event has occurred, including, but not limited to, labor troubles unrelated to the Contractor, failure of or inadequate permanent power, unavoidable casualties, fire not caused by the Contractor, extraordinary weather conditions, disasters, riots, acts of God, insurrection or war.

(k) Goods: For purposes of the Contract, all things which are movable at the time that the Contract is effective and which include, without limiting this definition, supplies, materials and equipment, as specified in the Invitation to Bid and set forth in Exhibit A.

(l) Goods or Services: Goods, Services or both, as specified in the Invitation to Bid and set forth in Exhibit A.

(m) Invitation to Bid: A State request inviting bids for Goods or Services. This Contract shall be governed by the statutes, regulations and procedures of the State of Connecticut, Department of Administrative Services.

(n) Records: All working papers and such other information and materials as may have been accumulated by the Contractor in performing the Contract, including but not limited to, documents, data, plans, books, computations, drawings, specifications, notes, reports, records, estimates, summaries and correspondence, kept or stored in any form.

(o) Services: The performance of labor or work, as specified in the Invitation to Bid and set forth in Exhibit A.

(p) State: The State of Connecticut, including DAS, the Client Agency and any office, department, board, council, commission, institution or other agency of the State.

(q) Termination: An end to the Contract prior to the end of its term whether effected pursuant to a right which the Contract creates or for a breach.

(r) Title: all ownership, title, licenses, rights and interest, including, but not limited to, perpetual use, of and to the Goods or Services.

2. Term of Contract; Contract Extension. The Contract will be in effective from the date of award through December 31, 2020.
DAS, in its sole discretion, may extend this Contract for additional terms beyond the original term, prior to Termination or expiration, one or more times for a combined total period not to exceed the complete length of the original term.

3. Description of Goods or Services and Additional Terms and Conditions. The Contractor shall perform as set forth in Exhibit A. For purposes of this Contract, to perform and the performance in Exhibit A is referred to as "Perform" and the "Performance."

4. Price Schedule, Payment Terms and Billing, and Price Adjustments.

(a) Price Schedule: Price Schedule under this Contract is set forth in Exhibit B.

(b) Payment Terms and Billing:

(1) Payment shall be made only after the Client Agency receives and accepts the Goods or Services and after it receives a properly completed invoice. Unless otherwise specified in the Contract, payment for all accepted Goods or Services shall be due within forty-five (45) days after acceptance of the Goods or Services, or thirty (30) days if the Contractor is a certified small contractor or minority business enterprise as defined in Conn. Gen. Stat. § 4a-60g. The Contractor shall submit an invoice to the Client Agency for the Performance. The invoice shall include detailed information for Goods or Services, delivered and Performed, as applicable, and accepted. Any late payment charges shall be calculated in accordance with the Connecticut General Statutes.

(2) THE STATE SHALL MAKE ALL PAYMENTS TO THE CONTRACTOR THROUGH ELECTRONIC FUNDS TRANSFER VIA THE AUTOMATED CLEARING HOUSE ("ACH"). CONTRACTOR SHALL ENROLL IN ACH THROUGH THE OFFICE OF THE STATE COMPTROLLER PRIOR TO SENDING ANY INVOICE TO THE STATE. THE CONTRACTOR MAY OBTAIN DETAILED INFORMATION REGARDING ACH AT: HTTP://WWW.OSC.CT.GOV/VENDOR/DIRECTDEPOSIT.HTML.

(c) Notwithstanding any language regarding Contractor price increases herein, the Price Schedule will be adjusted to reflect any increase in the minimum wage rate that may occur during the term of this Contract as mandated by State law and in accordance with the terms of this section. Contractor shall provide documentation, in the form of certified payroll or other documentation acceptable to the State, substantiating the amount of any increase in Contractor labor costs as a result of changes to the minimum wage rate within ninety (90) days of the statutorily identified effective date of any increase in the minimum wage. Upon receipt, and verification of Contractor documentation DAS shall adjust the Price Schedule accordingly through a supplement to this Contract.

(d) The Contractor shall comply with all provisions of Section 31-57f of the Connecticut General Statutes concerning standard wages. Current standard wage rates are included in Exhibit D. Notwithstanding any language regarding Contractor price increases, the Price Schedule will be adjusted to reflect any increase in the standard wage rate that may occur, as mandated by State law. Exhibit D will not be adjusted to reflect new standard wage rates until the Contractor provides documentation, in the form of certified payroll or other documentation acceptable to the State, substantiating the increase in Contractor labor costs as a result of changes to the standard wage rate. The Contractor must provide this documentation to the State within ninety (90) days' of the effective date that the State Department of Labor establishes for the increase in the standard wage. Upon receipt and verification of

Contractor documentation, DAS shall adjust the Price Schedule and update Exhibit D accordingly through a supplement to this Contract.

(e) Price Adjustments:
Prices for the Goods or Services listed in Exhibit B shall remain unchanged for twelve (12) months following the Effective Date of the Contract. The Contractor shall have the right to request a price adjustment only during the thirty (30) days immediately preceding the annual anniversary dates of the Effective Date of the Contract during the term of the Contract. During this thirty (30) day period, the Contractor may submit a request in writing to DAS for a price adjustment that is consistent with and relative to price changes originating with and compelled by manufacturer and/or market trends and which changes are outside of the Contractor's control. The Contractor must fully document its request, attaching to the request, without limitation, such manufacturer and market data, as support the requested adjustment. DAS may, in its sole discretion, approve or disapprove the requested adjustment, in whole or in part. Any approved adjustment shall be final and shall remain unchanged until the next annual anniversary date of the Effective Date of the Contract.

The Contractor shall submit all requests in accordance with Section #36. Notice. A request made to the Client Agency shall not be valid and the parties shall treat it as if the Contractor had not made the request at all. A request made to the Client Agency shall not be considered timely and shall not toll or extend the running of the thirty (30) days. The right of the Contractor to request a particular price adjustment shall lapse upon the expiration of the applicable thirty (30) days. If the Contractor fails to make a timely request, then the price shall remain unchanged from the previous year and shall continue through the next succeeding twelve (12) months and until the second annual anniversary of the Effective Date of the Contract, if approved, price adjustments shall become effective ten (10) days after the date of the approval. The Contractor shall honor any purchase orders issued prior to the effective date of the approval at the price in effect at the time of the issuance of the purchase order.

5. Rejected Items; Abandonment.

(a) The Contractor may deliver, cause to be delivered, or, in any other way, bring or cause to be brought, to any State premises or other destination, Goods, as samples or otherwise, and other supplies, materials, equipment or other tangible personal property. The State may, by written notice and in accordance with the terms and conditions of the Contract, direct the Contractor to remove any or all such Goods ("the "Rejected Goods") and any or all other supplies, materials, equipment or other tangible personal property (collectively, the "Contractor Property") from and out of State premises and any other location which the State manages, leases or controls. The Contractor shall remove the Rejected Goods and the Contractor Property in accordance with the terms and conditions of the written notice. Failure to remove the Rejected Goods or the Contractor Property in accordance with the terms and conditions of the written notice shall mean, for itself and all Contractor Parties, that:

(1) they have voluntarily, intentionally, unconditionally, unequivocally and absolutely abandoned and left unclaimed the Rejected Goods and Contractor Property and relinquished all ownership, title, licenses, rights, possession and interest of, in and to (collectively, "Title") the Rejected Goods and Contractor Property with the specific and express intent of (A) terminating all of their Title to the Rejected Goods and Contractor Property, (B) vesting Title to the Rejected Goods and Contractor Property in the State of

Connecticut and (C) not ever reclaiming Title or any future rights of any type in and to the Rejected Goods and Contractor Property;

(2) there is no ignorance, inadvertence or unawareness to mitigate against the intent to abandon the Rejected Goods or Contractor Property;

(3) they vest authority, without any further act required on their part or the State's part, in the Client Agency and the State to use or dispose of the Rejected Goods and Contractor Property, in the State's sole discretion, as if the Rejected Goods and Contractor Property were the State's own property and in accordance with law, without incurring any liability or obligation to the Contractor or any other party;

(4) if the State incurs any costs or expenses in connection with disposing of the Rejected Goods and Contractor Property, including, but not limited to, advertising, moving or storing the Rejected Goods and Contractor Property, auction and other activities, the State shall invoice the Contractor for all such cost and expenses and the Contractor shall reimburse the State no later than thirty (30) days after the date of invoice; and

(5) they do remise, release and forever discharge the State and its employees, departments, commissions, boards, bureaus, agencies, instrumentalities or political subdivisions and their respective successors, heirs, executors and assigns (collectively, the "State and Its Agents") of and from all Claims which they and their respective successors or assigns, jointly or severally, ever had, now have or will have against the State and Its Agents arising from the use or disposition of the Rejected Goods and Contractor Property.

(b) The Contractor shall secure from each Contractor Party, such document or instrument as necessary or appropriate as will vest in the Contractor plenary authority to bind the Contractor Parties to the full extent necessary or appropriate to give full effect to all of the terms and conditions of this section. The Contractor shall provide, no later than fifteen (15) days after receiving a request from the State, such information as the State may require to evidence, in the State's sole determination, compliance with this section.

6. Order and Delivery. The Contract shall bind the Contractor to furnish and deliver the Goods or Services in accordance with Exhibit A and at the prices set forth in Exhibit B. Subject to the sections in this Contract concerning Force Majeure, Termination and Open Market Purchases, the Contract shall bind the Client Agency to order the Goods or Services from the Contractor, and to pay for the accepted Goods or Services in accordance with Exhibit B.

7. Contract Amendments.
No amendment to or modification or other alteration of the Contract shall be valid or binding upon the State unless made in writing, signed by both parties and, if applicable, approved by the Connecticut Attorney General.

8. Assignment. The Contractor shall not assign any of its rights or obligations under the Contract, voluntarily or otherwise, in any manner without the prior written consent of DAS. DAS may void any purported assignment in violation of this section and declare the Contractor in breach of Contract. Any Termination by DAS for a breach is without prejudice to DAS's or the State's rights or possible Claims.

9. Termination.

(a) Notwithstanding any provisions in this Contract, DAS, through a duly authorized employee, may Terminate the Contract whenever DAS makes a written determination that such Termination is in the best interests of the State. DAS shall notify the Contractor in writing of Termination pursuant to this section, which notice shall specify the effective date of Termination and the extent to which the Contractor must complete its Performance under the Contract prior to such date.

(b) Notwithstanding any provisions in this Contract, DAS, through a duly authorized employee, may, after making a written determination that the Contractor has breached the Contract, Terminate the Contract in accordance with the provisions in the Breach section of this Contract.

(c) DAS shall send the notice of Termination via certified mail, return receipt requested, to the Contractor at the most current address which the Contractor has furnished to DAS for purposes of correspondence, or by hand delivery. Upon receiving the notice from DAS, the Contractor shall immediately discontinue all services affected in accordance with the notice, undertake all commercially reasonable efforts to mitigate any losses or damages, and deliver to the Client Agency all Records. The Records are deemed to be the property of the Client Agency and the Contractor shall deliver them to the Client Agency no later than thirty (30) days after the Termination of the Contract or fifteen (15) days after the Contractor receives a written request from either DAS or the Client Agency for the Records. The Contractor shall deliver those Records that exist in electronic, magnetic or other intangible form in a non-proprietary format, such as, but not limited to, ASCII or .TXT.

(d) Upon receipt of a written notice of Termination from DAS, the Contractor shall cease operations as DAS directs in the notice, and take all actions that are necessary or appropriate, or that DAS may reasonably direct, for the protection, and preservation of the Goods and any other property. Except for any work which DAS directs the Contractor to Perform in the notice prior to the effective date of Termination, and except as otherwise provided in the notice, the Contractor shall terminate or conclude all existing subcontracts and purchase orders and shall not enter into any further subcontracts, purchase orders or commitments.

(e) The Client Agency shall, within forty-five (45) days of the effective date of Termination, reimburse the Contractor for its Performance rendered and accepted by the Client Agency in accordance with Exhibit A, in addition to all actual and reasonable costs incurred after Termination in completing those portions of the Performance which the notice required the Contractor to complete. However, the Contractor is not entitled to receive and the Client Agency is not obligated to tender to the Contractor any payments for anticipated or lost profits. Upon request by DAS or the Client Agency, as applicable, the Contractor shall assign to DAS or the Client Agency, or any replacement contractor which DAS or the Client Agency designates, all subcontracts, purchase orders and other commitments, deliver to DAS or the Client Agency all Records and other information pertaining to its Performance, and remove from State premises, whether leased or owned, all of Contractor's property, equipment, waste material and rubbish related to its Performance, all as DAS or the Client Agency may request.

(f) For breach or violation of any of the provisions in the section concerning Representations and Warranties, DAS may Terminate the Contract in accordance with its terms and revoke any consents to assignments given as if the assignments had never been requested or consented to, without liability to the Contractor or Contractor Parties or any third party.

(g) Upon Termination of the Contract, all rights and obligations shall be null and void, so that no party shall have any further rights or obligations to any other party, except with respect to the sections which survive Termination. All representations, warranties, agreements and rights of the parties under the Contract shall survive such Termination to the extent not otherwise limited in the Contract and without each one of them having to be specifically mentioned in the Contract.

(h) Termination of the Contract pursuant to this section shall not be deemed to be a breach of contract by DAS.

10. Cost Modifications. The parties may agree to a reduction in the cost of the Contract at any time during which the Contract is in effect. Without intending to impose a limitation on the nature of the reduction, the reduction may be to hourly, staffing or unit costs, the total cost of the Contract or the reduction may take such other form as the State deems to be necessary or appropriate.

11. Breach. If either party breaches the Contract in any respect, the non-breaching party shall provide written notice of such breach to the breaching party and afford the breaching party an opportunity to cure the breach within ten (10) days from the date that the breaching party receives such notice. Any other time provided for in the notice shall trump such ten (10) days. Such right to cure period shall be extended if the non-breaching party is satisfied that the breaching party is making a good faith effort to cure but the nature of the breach is such that it cannot be cured within the right to cure period. The notice may include an effective Contract Termination date if the breach is not cured by the stated date and, unless otherwise modified by the non-breaching party in writing prior to the Termination date, no further action shall be required of any party to effect the Termination as of the stated date. If the notice does not set forth an effective Contract Termination date, then the non-breaching party may Terminate the Contract by giving the breaching party no less than twenty four (24) hours' prior written notice. If DAS believes that the Contractor has not performed according to the Contract, the Client Agency may withhold payment in whole or in part pending resolution of the Performance issue, provided that DAS notifies the Contractor in writing prior to the date that the payment would have been due in accordance with Exhibit B.

12. Waiver.

(a) No waiver of any breach of the Contract shall be interpreted or deemed to be a waiver of any other or subsequent breach. All remedies afforded in the Contract shall be taken and construed as cumulative, that is, in addition to every other remedy provided in the Contract or at law or in equity.

(b) A party's failure to insist on strict performance of any provision of the Contract shall only be deemed to be a waiver of rights and remedies concerning that specific instance of Performance and shall not be deemed to be a waiver of any subsequent rights, remedies or breach.

13. Open Market Purchases. Failure of the Contractor to Perform within the time specified in the Contract, or failure to replace rejected or substandard Goods or fulfill unperformed Services when so requested and as the Contract provides or allows, constitutes a breach of the Contract and as a remedy for such breach, such failure shall constitute authority for DAS, if it deems it to be necessary or appropriate in its sole discretion, to Terminate the Contract and/or to purchase on the open market, Goods or Services to replace those which have been rejected, not delivered, or not Performed. The Client Agency shall invoice the

Contractor for all such purchases to the extent that they exceed the costs and expenses in Exhibit B and the Contractor shall pay the Client Agency's invoice immediately after receiving the invoice. If DAS does not Terminate the Contract, the Client Agency will deduct such open market purchases from the Contract quantities. However, if the Client Agency deems it to be in the best interest of the State, the Client Agency may accept and use the Goods or Services delivered which are substandard in quality, subject to an adjustment in price to be determined by the Client Agency.

14. Purchase Orders.

(a) The Contract itself is not an authorization for the Contractor to ship Goods or begin Performance in any way. The Contractor may begin Performance only after it has received a duly issued purchase order against the Contract for Performance.

(b) The Client Agency shall issue a purchase order against the Contract directly to the Contractor and to no other party.

(c) All purchase orders shall be in written or electronic form, bear the Contract number (if any) and comply with all other State and Client Agency requirements, particularly the Client Agency's requirements concerning procurement. Purchase orders issued in compliance with such requirements shall be deemed to be duly issued.

(d) A Contractor making delivery without a duly issued purchase order in accordance with this section does so at the Contractor's own risk.

(e) The Client Agency may, in its sole discretion, deliver to the Contractor any or all duly issued purchase orders via electronic means only, such that the Client Agency shall not have any additional obligation to deliver to the Contractor a "hard copy" of the purchase order or a copy bearing any hand-written signature or other "original" marking.

15. Indemnification.

(a) The Contractor shall indemnify, defend and hold harmless the State and its officers, representatives, agents, servants, employees, successors and assigns from and against any and all (1) Claims arising, directly or indirectly, in connection with the Contract, including the acts of commission or omission (collectively, the "Acts") of the Contractor or Contractor Parties; and (2) liabilities, damages, losses, costs and expenses, including but not limited to, attorneys' and other professionals' fees, arising, directly or indirectly, in connection with Claims, Acts or the Contract. The Contractor shall use counsel reasonably acceptable to the State in carrying out its obligations under this section. The Contractor's obligations under this section to indemnify, defend and hold harmless against Claims includes Claims concerning confidentiality of any part of or all of the Contractor's bid, proposal or any Records, any intellectual property rights, other proprietary rights of any person or entity, copyrighted or uncopyrighted compositions, secret processes, patented or unpatented inventions, articles or appliances furnished or used in the Performance.

(b) The Contractor shall not be responsible for indemnifying or holding the State harmless from any liability arising due to the negligence of the State or any other person or entity acting under the direct control or supervision of the State.

(c) The Contractor shall reimburse the State for any and all damages to the real or personal property of the State caused by the Acts of the Contractor or any Contractor Parties. The State shall give the Contractor reasonable notice of any such Claims.

(d) The Contractor's duties under this section shall remain fully in effect and binding in accordance with the terms and conditions of the Contract, without being lessened or compromised in any way, even where the Contractor is alleged or is found to have merely contributed in part to the Acts giving rise to the Claims and/or where the State is alleged or is found to have contributed to the Acts giving rise to the Claims.

(e) The Contractor shall carry and maintain at all times during the term of the Contract, and during the time that any provisions survive the term of the Contract, sufficient general liability insurance to satisfy its obligations under this Contract. The Contractor shall cause the State to be named as an additional insured on the policy and shall provide (1) a certificate of insurance, (2) the declaration page and (3) the additional insured endorsement to the policy to DAS all in an electronic format acceptable to DAS prior to the Effective Date of the Contract evidencing that the State is an additional insured. The Contractor shall not begin Performance until the delivery of these 3 documents to DAS. Contractor shall provide an annual electronic update of the 3 documents to DAS on or before each anniversary of the Effective Date during the Contract Term. State shall be entitled to recover under the insurance policy even if a body of competent jurisdiction determines that State is contributorily negligent.

(f) This section shall survive the Termination of the Contract and shall not be limited by reason of any insurance coverage.

16. Forum and Choice of Law. The parties deem the Contract to have been made in the City of Hartford, State of Connecticut. Both parties agree that it is fair and reasonable for the validity and construction of the Contract to be, and it shall be, governed by the laws and court decisions of the State of Connecticut, without giving effect to its principles of conflicts of laws. To the extent that any immunities provided by Federal law or the laws of the State of Connecticut do not bar an action against the State, and to the extent that these courts are courts of competent jurisdiction, for the purpose of venue, the complaint shall be made returnable to the Judicial District of Hartford only or shall be brought in the United States District Court for the District of Connecticut only, and shall not be transferred to any other court, provided, however, that nothing here constitutes a waiver or compromise of the sovereign immunity of the State of Connecticut. The Contractor waives any objection which it may now have or will have to the laying of venue of any Claims in any forum and further irrevocably submits to such jurisdiction in any suit, action or proceeding.

17. Contractor Guaranties. Contractor shall:

(a) Perform fully under the Contract;

(b) Guarantee the Goods or Services against defective material or workmanship and to repair any damage or marring occasioned in transit or, at the Client Agency's option, replace them;

(c) Furnish adequate protection from damage for all work and to repair damage of any kind, for which its workers are responsible, to the premises, Goods, the Contractor's work or that of Contractor Parties;

(d) With respect to the provision of Services, pay for all permits, licenses and fees and give all required or appropriate notices;

(e) Adhere to all Contractual provisions ensuring the confidentiality of Records that the Contractor has access to and are exempt from disclosure under the State's Freedom of Information Act or other applicable law; and

(f) Neither disclaim, exclude nor modify the implied warranties of fitness for a particular purpose or of merchantability.

18. Implied Warranties. DAS does not disclaim, exclude or modify the implied warranty of fitness for a particular purpose or the warranty of merchantability.

19. Goods, Standards and Appurtenances. Any Goods delivered must be standard new Goods, latest model, except as otherwise specifically stated in the Contract. Remanufactured, refurbished or reconditioned equipment may be accepted but only to the extent allowed under the Contract. Where the Contract does not specifically list or describe any parts or nominal appurtenances of equipment for the Goods, it shall be understood that the Contractor shall deliver such equipment and appurtenances as are usually provided with the manufacturer's stock model.

20. Delivery.

(a) Delivery shall be made as ordered and in accordance with the Contract. Unless otherwise specified in the Contract, delivery shall be to a loading dock or receiving platform. The Contractor or Contractor's shipping designee shall be responsible for removal of Goods from the carrier and placement on the Client Agency loading dock or receiving platform. The receiving personnel of the Client Agency are not required to assist in this process. The decision of DAS as to reasonable compliance with delivery terms shall be final and binding. The burden of proof of proper receipt of the order shall rest with the Contractor.

(b) In order for the time of delivery to be extended, the Client Agency must first approve a request for extension from the time specified in the Contract, such extension applying only to the particular item or shipment.

(c) Goods shall be securely and properly packed for shipment, according to accepted standard commercial practice, without extra charge for packing cases, baling or sacks. The containers shall remain the property of the Client Agency unless otherwise stated in the Contract.

(d) All risk of loss and damage to the Goods transfers to the Client Agency upon Title vesting in the Client Agency.

21. Goods Inspection. The Commissioner of DAS, in consultation with the Client Agency, shall determine the manner and prescribe the inspection of all Goods and the tests of all samples submitted to determine whether they comply with all of the specifications in the Contract. If any Goods fail in any way to meet the specifications in the Contract, the Client Agency or the Commissioner of DAS may, in its sole discretion, either reject it and owe nothing or accept it and pay for it on an adjusted price basis, depending on the degree to which the Goods meet the specifications. Any decision pertaining to any such failure or rejection shall be final and binding.

22. Emergency Standby for Goods and/or Services**.** If any Federal or State official, having authority to do so, declares an emergency or the occurrence of a natural disaster within the State of Connecticut, DAS and the Client Agency may request the Goods and Services on an expedited and prioritized basis. Upon receipt of such a request the Contractor shall make all necessary and appropriate commercially reasonable efforts to reallocate its staffing and

other resources in order to give primary preference to Performing this Contract ahead of or prior to fulfilling, in whole or in part, any other contractual obligations that the Contractor may have. The Contractor is not obligated to make those efforts to Perform on an expedited and prioritized basis in accordance with this paragraph if doing so will make the Contractor materially breach any other contractual obligations that the Contractor may have. Contractor shall acknowledge receipt of any request made pursuant to this paragraph within 2 hours from the time that the Contractor receives it via purchase order or through a request to make an expedited or prioritized purchase through the State of Connecticut Purchasing Card (MasterCard) Program (the "P-Card Program"). If the Contractor fails to acknowledge receipt within 2 hours, confirm its obligation to Perform or actually Perform, as set forth in the purchase order or through the P-Card Program, then DAS and the Client Agency may procure the Performance from another source without further notice to Contractor and without creating any right of recourse at law or in equity against DAS or Client Agency.

23. Setoff. In addition to all other remedies available hereunder, the State, in its sole discretion, may setoff (1) any costs or expenses that the State incurs resulting from the Contractor's unexcused nonperformance under the Contract and under any other agreement or arrangement that the Contractor has with the State and (2) any other amounts that are due or may become due from the State to the Contractor, against amounts otherwise due or that may become due to the Contractor under the Contract, or under any other agreement or arrangement that the Contractor has with the State. The State's right of setoff shall not be deemed to be the State's exclusive remedy for the Contractor's or Contractor Parties' breach of the Contract, all of which shall survive any setoffs by the State.

24. Force Majeure. The State and the Contractor shall not be excused from their obligation to Perform in accordance with the Contract except in the case of Force Majeure events and as otherwise provided for in the Contract. In the case of any such exception, the nonperforming party shall give immediate written notice to the other, explaining the cause and probable duration of any such nonperformance.

25. Advertising. The Contractor shall not refer to sales to the State for advertising or promotional purposes, including, but not limited to, posting any material or data on the Internet, without DAS's prior written approval.

26. Americans With Disabilities Act. The Contractor shall be and remain in compliance with the Americans with Disabilities Act of 1990 ("Act"), to the extent applicable, during the term of the Contract. DAS may Terminate the Contract if the Contractor fails to comply with the Act.

27. Representations and Warranties. The Contractor, represents and warrants to DAS for itself and Contractor Parties, that:

(a) if they are entities, they are duly and validly existing under the laws of their respective states of organization and authorized to conduct business in the State of Connecticut in the manner contemplated by the Contract. Further, as appropriate, they have taken all necessary action to authorize the execution, delivery and Performance of the Contract and have the power and authority to execute, deliver and Perform their obligations under the Contract;

(b) they will comply with all applicable State and Federal laws and municipal ordinances in satisfying their obligations to the State under and pursuant to the Contract, including, but not limited to (1) Connecticut General Statutes Title 1, Chapter 10, concerning the State's

Codes of Ethics and (2) Title 4a concerning State purchasing, including, but not limited to Section 22a-194a concerning the use of polystyrene foam;

(c) the execution, delivery and Performance of the Contract will not violate, be in conflict with, result in a breach of or constitute (with or without due notice and/or lapse of time) a default under any of the following, as applicable: (1) any provision of law; (2) any order of any court or the State; or (3) any indenture, agreement, document or other instrument to which it is a party or by which it may be bound;

(d) they are not presently debarred, suspended, proposed for debarment, declared ineligible, or voluntarily excluded from covered transactions by any governmental entity;

(e) as applicable, they have not, within the three years preceding the Contract, in any of their current or former jobs, been convicted of, or had a civil judgment rendered against them or against any person who would Perform under the Contract, for commission of fraud or a criminal offense in connection with obtaining, attempting to obtain, or performing a transaction or contract with any governmental entity. This includes, but is not limited to, violation of Federal or state antitrust statutes or commission of embezzlement, theft, forgery, bribery, falsification or destruction of records, making false statements, or receiving stolen property;

(f) they are not presently indicted for or otherwise criminally or civilly charged by any governmental entity with commission of any of the offenses listed above;

(g) they have not within the three years preceding the Contract had one or more contracts with any governmental entity Terminated;

(h) they have not employed or retained any entity or person, other than a bona fide employee working solely for them, to solicit or secure the Contract and that they have not paid or agreed to pay any entity or person, other than a bona fide employee working solely for them, any fee, commission, percentage, brokerage fee, gifts, or any other consideration contingent upon or resulting from the award or making of the Contract or any assignments made in accordance with the terms of the Contract;

(i) to the best of their knowledge, there are no Claims involving the Contractor or Contractor Parties that might reasonably be expected to materially adversely affect their businesses, operations, assets, properties, financial stability, business prospects or ability to Perform fully under the Contract;

(j) they shall disclose, to the best of their knowledge, to DAS in writing any Claims involving them that might reasonably be expected to materially adversely affect their businesses, operations, assets, properties, financial stability, business prospects or ability to Perform fully under the Contract, no later than ten (10) Days after becoming aware or after they should have become aware of any such Claims. For purposes of the Contractor's obligation to disclose any Claims to DAS, the ten (10) Days in the section of this Contract concerning Disclosure of Contractor Parties Litigation shall run consecutively with the ten (10) Days provided for in this representation and warranty;

(k) their participation in the Invitation to Bid process is not a conflict of interest or a breach of ethics under the provisions of Title 1, Chapter 10 of the Connecticut General Statutes concerning the State's Code of Ethics;

(l) the Bid was not made in connection or concert with any other person or entity, including any affiliate (as defined in the Tangible Personal Property section of this Contract) of the Contractor, submitting a bid for the same Goods or Services, and is in all respects fair and without collusion or fraud;

(m) they are able to Perform under the Contract using their own resources or the resources of a party who is not a Contractor;

(n) the Contractor shall obtain in a written contract all of the representations and warranties in this section from any Contractor Parties and to require that provision to be included in any contracts and purchase orders with Contractor Parties;

(o) they have paid all applicable workers' compensation second injury fund assessments concerning all previous work done in Connecticut;

(p) they have a record of compliance with Occupational Health and Safety Administration regulations without any unabated, willful or serious violations;

(q) they owe no unemployment compensation contributions;

(r) they are not delinquent in the payment of any taxes owed, or, that they have filed a sales tax security bond, and they have, if and as applicable, filed for motor carrier road tax stickers and have paid all outstanding road taxes;

(s) all of their vehicles have current registrations and, unless such vehicles are no longer in service, they shall not allow any such registrations to lapse;

(t) each Contractor Party has vested in the Contractor plenary authority to bind the Contractor Parties to the full extent necessary or appropriate to ensure full compliance with and Performance in accordance with all of the terms and conditions of the Contract and that all appropriate parties shall also provide to DAS, no later than fifteen (15) days after receiving a request from DAS, such information as DAS may require to evidence, in DAS's sole determination, compliance with this section;

(u) except to the extent modified or abrogated in the Contract, all Title shall pass to the Client Agency upon complete installation, testing and acceptance of the Goods or Services and payment by the Client Agency;

(v) if either party Terminates the Contract, for any reason, they shall relinquish to the Client Agency all Title to the Goods delivered, accepted and paid for (except to the extent any invoiced amount is disputed) by the Client Agency;

(w) with regard to third party products provided with the Goods, they shall transfer all licenses which they are permitted to transfer in accordance with the applicable third party license;

(x) they shall not copyright, register, distribute or claim any rights in or to the Goods after the Effective Date of the Contract without DAS's prior written consent;

(y) they either own or have the authority to use all Title of and to the Goods, and that such Title is not the subject of any encumbrances, liens or claims of ownership by any third party;

(z) the Goods do not infringe or misappropriate any patent, trade secret or other intellectual property right of a third party;

(aa) the Client Agency's use of any Goods shall not infringe or misappropriate any patent, trade secret or other intellectual property right of a third party;

(bb) if they procure any Goods, they shall sub-license such Goods and that the Client Agency shall be afforded the full benefits of any manufacturer or subcontractor licenses for the use of the Goods; and

(cc) they shall assign or otherwise transfer to the Client Agency, or afford the Client Agency the full benefits of any manufacturer's warranty for the Goods, to the extent that such warranties are assignable or otherwise transferable to the Client Agency.

28. Representations and Warranties Concerning Motor Vehicles. If in the course of Performance or in any other way related to the Contract the Contractor at any time uses or operates "motor vehicles," as that term is defined by Conn. Gen. Stat. §14-1 (including, but not limited to such services as snow plowing, sanding, hauling or delivery of materials, freight or merchandise, or the transportation of passengers), the Contractor, represents and warrants for itself and the Contractor Parties, that:

(a) It is the owner of record or lessee of record of each such motor vehicle used in the Performance of the Contract, and each such motor vehicle is duly registered with the Connecticut Department of Motor Vehicles ("ConnDMV") in accordance with the provisions of Chapter 246 of the Connecticut General Statutes. Each such registration shall be in valid status, and shall not be expired, suspended or revoked by ConnDMV , for any reason or cause. If such motor vehicle is not registered with ConnDMV, then it shall be duly registered with another state or commonwealth in accordance with such other state's or commonwealth's applicable statutes. Each such registration shall be in valid status, and shall not be expired, suspended or revoked by such other state or commonwealth for any reason or cause.

(b) Each such motor vehicle shall be fully insured in accordance with the provisions of Sections 14-12b, 14-112 and 38a-371 of the Connecticut General Statutes, as amended, in the amounts required by the said sections or in such higher amounts as have been specified by ConnDMV as a condition for the award of the Contract, or in accordance with all substantially similar provisions imposed by the law of the jurisdiction where the motor vehicle is registered.

(c) Each Contractor Party who uses or operates a motor vehicle at any time in the Performance of the Contract shall have and maintain a motor vehicle operator's license or commercial driver's license of the appropriate class for the motor vehicle being used or operated. Each such license shall bear the endorsement or endorsements required by the provisions of Section 14-36a of the Connecticut General Statutes, as amended, to operate such motor vehicle, or required by substantially similar provisions imposed by the law of another jurisdiction in which the operator is licensed to operate such motor vehicle. The license shall be in valid status, and shall not be expired, suspended or revoked by ConnDMV or such other jurisdiction for any reason or cause.

(d) Each motor vehicle shall be in full compliance with all of the terms and conditions of all provisions of the Connecticut General Statutes and regulations, or those of the jurisdiction where the motor vehicle is registered, pertaining to the mechanical condition, equipment, marking and operation of motor vehicles of such type, class and weight, including, but not limited to, requirements for intrastate carriers with motor vehicles having a gross vehicle weight rating or gross combination weight rating or gross vehicle weight or gross

combination weight of 18,001 pounds or more or interstate carriers with motor vehicles having a gross vehicle weight rating or gross combination weight rating or gross vehicle weight or gross combination weight of 10,001 pounds or more otherwise described by the provisions of Conn. Gen. Stat. § 14-163c(a) and all applicable provisions of the Federal Motor Carrier Safety Regulations, as set forth in Title 49, Parts 382 to 399, inclusive, of the Code of Federal Regulations. If the Contractor is a "motor carrier," as that term is defined in section 49 CFR Part 390, and the Contractor is subject to an order issued by the Federal Motor Carrier Safety Administration that prohibits such Contractor from operating or allowing the operation of a motor vehicle, then the Contractor shall comply fully with such order. In addition, if a motor vehicle or its operator is declared out of service pursuant to Conn. Gen. Stat. § 14-163c(d)(4), then the Contractor shall not operate or allow the operation of that motor vehicle and shall not allow the operator to operate a motor vehicle while the respective subject out-of-service order is in effect.

29. Disclosure of Contractor Parties Litigation. The Contractor shall require that all Contractor Parties, as appropriate, disclose to the Contractor, to the best of their knowledge, any Claims involving the Contractor Parties that might reasonably be expected to materially adversely affect their businesses, operations, assets, properties, financial stability, business prospects or ability to Perform fully under the Contract, no later than ten (10) Days after becoming aware or after they should have become aware of any such Claims. Disclosure shall be in writing.

30. Entirety of Contract. The Contract is the entire agreement between the parties with respect to its subject matter, and supersedes all prior agreements, bids, offers, counteroffers and understandings of the parties, whether written or oral. The Contract has been entered into after full investigation, neither party relying upon any statement or representation by the other unless such statement or representation is specifically embodied in the Contract.

31. Exhibits. All exhibits referred to in and attached to this Contract are incorporated in this Contract by such reference and shall be deemed to be a part of it as if they had been fully set forth in it.

32. Executive Orders. This Contract is subject to the provisions of Executive Order No. Three of Governor Thomas J. Meskill, promulgated June 16, 1971, concerning labor employment practices, Executive Order No. Seventeen of Governor Thomas J. Meskill, promulgated February 15, 1973, concerning the listing of employment openings and Executive Order No. Sixteen of Governor John G. Rowland promulgated August 4, 1999, concerning violence in the workplace, all of which are incorporated into and are made a part of the Contract as if they had been fully set forth in it. The Contract may also be subject to Executive Order No. 14 of Governor M. Jodi Rell, promulgated April 17, 2006, concerning procurement of cleaning products and services, Executive Order No. 61 of Governor Dannel P. Malloy promulgated December 13, 2017 concerning the Policy for the Management of State Information Technology Projects, as issued by the Office of Policy and Management, Policy ID IT-SDLC-17-04, and Executive Order No. 49 of Governor Dannel P. Malloy, promulgated May 22, 2015, mandating disclosure of certain gifts to public employees and contributions to certain candidates for office in accordance with their respective terms and conditions. If Executive Orders 14, 61 or 49 are applicable, it is deemed to be incorporated into and are made a part of the Contract as if it had been fully set forth in it. At the Contractor's request, the State shall provide a copy of these orders to the Contractor.

33. Non-discrimination.

(a) For purposes of this Section, the following terms are defined as follows:

(1) "Commission" means the Commission on Human Rights and Opportunities;

(2) "Contract" and "contract" include any extension or modification of the Contract or contract;

(3) "Contractor" and "contractor" include any successors or assigns of the Contractor or contractor;

(4) "Gender identity or expression" means a person's gender-related identity, appearance or behavior, whether or not that gender-related identity, appearance or behavior is different from that traditionally associated with the person's physiology or assigned sex at birth, which gender-related identity can be shown by providing evidence including, but not limited to, medical history, care or treatment of the gender-related identity, consistent and uniform assertion of the gender-related identity or any other evidence that the gender-related identity is sincerely held, part of a person's core identity or not being asserted for an improper purpose.

(5) "good faith" means that degree of diligence which a reasonable person would exercise in the performance of legal duties and obligations;

(6) "good faith efforts" shall include, but not be limited to, those reasonable initial efforts necessary to comply with statutory or regulatory requirements and additional or substituted efforts when it is determined that such initial efforts will not be sufficient to comply with such requirements;

(7) "marital status" means being single, married as recognized by the state of Connecticut, widowed, separated or divorced;

(8) "mental disability" means one or more mental disorders, as defined in the most recent edition of the American Psychiatric Association's "Diagnostic and Statistical Manual of Mental Disorders", or a record of or regarding a person as having one or more such disorders;

(9) "minority business enterprise" means any small contractor or supplier of materials fifty-one percent or more of the capital stock, if any, or assets of which is owned by a person or persons: (1) who are active in the daily affairs of the enterprise, (2) who have the power to direct the management and policies of the enterprise, and (3) who are members of a minority, as such term is defined in subsection (a) of Connecticut General Statutes § 32-9n; and

(10) "public works contract" means any agreement between any individual, firm or corporation and the State or any political subdivision of the State other than a municipality for construction, rehabilitation, conversion, extension, demolition or repair of a public building, highway or other changes or improvements in real property, or which is financed in whole or in part by the State, including, but not limited to, matching expenditures, grants, loans, insurance or guarantees.

For purposes of this Section, the terms "Contract" and "contract" do not include a contract where each contractor is (1) a political subdivision of the state, including, but not limited to, a municipality, unless the contract is a municipal public works contract or quasi-public agency project contract, (2) any other state, including but not limited to any federally recognized Indian tribal governments, as defined in C.G.S. § 1-267, (3) the federal government, (4) a foreign

government, or (5) an agency of a subdivision, state or government described in the immediately preceding enumerated items (1), (2), (3),or (4).

(b)

(1) The Contractor agrees and warrants that in the performance of the Contract such Contractor will not discriminate or permit discrimination against any person or group of persons on the grounds of race, color, religious creed, age, marital status, national origin, ancestry, sex, gender identity or expression, status of a veteran, intellectual disability, mental disability or physical disability, including, but not limited to, blindness, unless it is shown by such Contractor that such disability prevents performance of the work involved, in any manner prohibited by the laws of the United States or of the State of Connecticut; and the Contractor further agrees to take affirmative action to [insure] ensure that applicants with job-related qualifications are employed and that employees are treated when employed without regard to their race, color, religious creed, age, marital status, national origin, ancestry, sex, gender identity or expression, status of a veteran, intellectual disability, mental disability or physical disability, including, but not limited to, blindness, unless it is shown by the Contractor that such disability prevents performance of the work involved; (2) the Contractor agrees, in all solicitations or advertisements for employees placed by or on behalf of the Contractor, to state that it is an "affirmative action-equal opportunity employer" in accordance with regulations adopted by the Commission; (3) the Contractor agrees to provide each labor union or representative of workers with which the Contractor has a collective bargaining agreement or other contract or understanding and each vendor with which the Contractor has a contract or understanding, a notice to be provided by the Commission, advising the labor union or workers' representative of the Contractor's commitments under this section and to post copies of the notice in conspicuous places available to employees and applicants for employment; (4) the Contractor agrees to comply with each provision of this Section and Connecticut General Statutes §§ 46a-68e and 46a-68f and with each regulation or relevant order issued by said Commission pursuant to Connecticut General Statutes §§ 46a-56, 46a-68e and 46a-68f; and (5) the Contractor agrees to provide the Commission on Human Rights and Opportunities with such information requested by the Commission, and permit access to pertinent books, records and accounts, concerning the employment practices and procedures of the Contractor as relate to the provisions of this Section and Connecticut General Statutes § 46a-56. If the contract is a public works contract, the Contractor agrees and warrants that he will make good faith efforts to employ minority business enterprises as subcontractors and suppliers of materials on such public works projects.

(c) Determination of the Contractor's good faith efforts shall include, but shall not be limited to, the following factors: The Contractor's employment and subcontracting policies, patterns and practices; affirmative advertising, recruitment and training; technical assistance activities and such other reasonable activities or efforts as the Commission may prescribe that are designed to ensure the participation of minority business enterprises in public works projects.

(d) The Contractor shall develop and maintain adequate documentation, in a manner prescribed by the Commission, of its good faith efforts.

(e) The Contractor shall include the provisions of subsection (b) of this Section in every subcontract or purchase order entered into in order to fulfill any obligation of a contract with the State and such provisions shall be binding on a subcontractor, vendor or manufacturer unless exempted by regulations or orders of the Commission. The

Contractor shall take such action with respect to any such subcontract or purchase order as the Commission may direct as a means of enforcing such provisions including sanctions for noncompliance in accordance with Connecticut General Statutes §46a-56; provided if such Contractor becomes involved in, or is threatened with, litigation with a subcontractor or vendor as a result of such direction by the Commission, the Contractor may request the State of Connecticut to enter into any such litigation or negotiation prior thereto to protect the interests of the State and the State may so enter.

(f) The Contractor agrees to comply with the regulations referred to in this Section as they exist on the date of this Contract and as they may be adopted or amended from time to time during the term of this Contract and any amendments thereto.

(g)

(1) The Contractor agrees and warrants that in the performance of the Contract such Contractor will not discriminate or permit discrimination against any person or group of persons on the grounds of sexual orientation, in any manner prohibited by the laws of the United States or the State of Connecticut, and that employees are treated when employed without regard to their sexual orientation; (2) the Contractor agrees to provide each labor union or representative of workers with which such Contractor has a collective bargaining agreement or other contract or understanding and each vendor with which such Contractor has a contract or understanding, a notice to be provided by the Commission on Human Rights and Opportunities advising the labor union or workers' representative of the Contractor's commitments under this section, and to post copies of the notice in conspicuous places available to employees and applicants for employment; (3) the Contractor agrees to comply with each provision of this section and with each regulation or relevant order issued by said Commission pursuant to Connecticut General Statutes § 46a-56; and (4) the Contractor agrees to provide the Commission on Human Rights and Opportunities with such information requested by the Commission, and permit access to pertinent books, records and accounts, concerning the employment practices and procedures of the Contractor which relate to the provisions of this Section and Connecticut General Statutes § 46a-56.

(h) The Contractor shall include the provisions of the foregoing paragraph in every subcontract or purchase order entered into in order to fulfill any obligation of a contract with the State and such provisions shall be binding on a subcontractor, vendor or manufacturer unless exempted by regulations or orders of the Commission. The Contractor shall take such action with respect to any such subcontract or purchase order as the Commission may direct as a means of enforcing such provisions including sanctions for noncompliance in accordance with Connecticut General Statutes § 46a-56; provided, if such Contractor becomes involved in, or is threatened with, litigation with a subcontractor or vendor as a result of such direction by the Commission, the Contractor may request the State of Connecticut to enter into any such litigation or negotiation prior thereto to protect the interests of the State and the State may so enter.

34. Tangible Personal Property.

(a) The Contractor on its behalf and on behalf of its Affiliates, as defined below, shall comply with the provisions of Conn. Gen. Stat. §12-411b, as follows:

(1) For the term of the Contract, the Contractor and its Affiliates shall collect and remit to the State of Connecticut, Department of Revenue Services, any Connecticut use tax due under the provisions of Chapter 219 of the Connecticut General Statutes for items of tangible

personal property sold by the Contractor or by any of its Affiliates in the same manner as if the Contractor and such Affiliates were engaged in the business of selling tangible personal property for use in Connecticut and had sufficient nexus under the provisions of Chapter 219 to be required to collect Connecticut use tax;

(2) A customer's payment of a use tax to the Contractor or its Affiliates relieves the customer of liability for the use tax;

(3) The Contractor and its Affiliates shall remit all use taxes they collect from customers on or before the due date specified in the Contract, which may not be later than the last day of the month next succeeding the end of a calendar quarter or other tax collection period during which the tax was collected;

(4) The Contractor and its Affiliates are not liable for use tax billed by them but not paid to them by a customer; and

(5) Any Contractor or Affiliate who fails to remit use taxes collected on behalf of its customers by the due date specified in the Contract shall be subject to the interest and penalties provided for persons required to collect sales tax under chapter 219 of the general statutes.

(b) For purposes of this section of the Contract, the word "Affiliate" means any person, as defined in section 12-1 of the general statutes, that controls, is controlled by, or is under common control with another person. A person controls another person if the person owns, directly or indirectly, more than ten per cent of the voting securities of the other person. The word "voting security" means a security that confers upon the holder the right to vote for the election of members of the board of directors or similar governing body of the business, or that is convertible into, or entitles the holder to receive, upon its exercise, a security that confers such a right to vote. "Voting security" includes a general partnership interest.

(c) The Contractor represents and warrants that each of its Affiliates has vested in the Contractor plenary authority to so bind the Affiliates in any agreement with the State of Connecticut. The Contractor on its own behalf and on behalf of its Affiliates shall also provide, no later than 30 days after receiving a request by the State's contracting authority, such information as the State may require to ensure, in the State's sole determination, compliance with the provisions of Chapter 219 of the Connecticut General Statutes, including, but not limited to, §12-411b.

35. Whistleblowing. This Contract may be subject to the provisions of Section 4-61dd of the Connecticut General Statutes. In accordance with this statute, if an officer, employee or appointing authority of the Contractor takes or threatens to take any personnel action against any employee of the Contractor in retaliation for such employee's disclosure of information to any employee of the contracting state or quasi-public agency or the Auditors of Public Accounts or the Attorney General under the provisions of subsection (a) of such statute, the Contractor shall be liable for a civil penalty of not more than five thousand dollars for each offense, up to a maximum of twenty per cent of the value of this Contract. Each violation shall be a separate and distinct offense and in the case of a continuing violation, each calendar day's continuance of the violation shall be deemed to be a separate and distinct offense. The State may request that the Attorney General bring a civil action in the Superior Court for the Judicial District of Hartford to seek imposition and recovery of such civil penalty. In accordance with subsection (f) of such statute, each large state contractor, as defined in the statute, shall post a notice of the provisions of the statute

relating to large state contractors in a conspicuous place which is readily available for viewing by the employees of the Contractor.

36. Notice. All notices, demands, requests, consents, approvals or other communications required or permitted to be given or which are given with respect to this Contract (for the purpose of this section collectively called "Notices") shall be deemed to have been effected at such time as the notice is placed in the U.S. mail, first class and postage pre-paid, return receipt requested or placed with a recognized, overnight express delivery service that provides for a return receipt. All such Notices shall be in writing and shall be addressed as follows:

    If to DAS:

    State of Connecticut Department of Administrative Services
    Procurement Division
    450 Columbus Boulevard, Suite 1202
    Hartford, CT 06103
    Attention: Daniel Dion

    If to the Contractor:

    At the address set forth on Form SP-38.

37. Insurance. Before commencing Performance, the Contractor shall obtain and maintain at its own cost and expense for the duration of the Contract, the following insurance as described in (a) through (h) below. Contractor shall assume any and all deductibles in the described insurance policies. The Contractor's insurers shall have no right of recovery or subrogation against the State and the described Contractor's insurance shall be primary coverage. Any failure to comply with the claim reporting provisions of the policy shall not affect coverage provided to the State.

(a) Reserved

(b) Commercial General Liability: $1,000,000 combined single limit per occurrence for bodily injury, personal injury and property damage. Coverage shall include, Premises and Operations, Independent Contractors, Products and Completed Operations, Contractual Liability and Broad Form Property Damage coverage. If a general aggregate is used, the general aggregate limit shall apply separately to the project or the general aggregate limit shall be twice the occurrence limit.

(c) Automobile Liability: $1,000,000 combined single limit per accident for bodily injury. Coverage extends to owned, hired and non-owned automobiles. If the vendor/contractor does not own an automobile, but one is used in the execution of the contract, then only hired and non-owned coverage is required. If a vehicle is not used in the execution of the contract then automobile coverage is not required.

(d) Workers' Compensation and Employers Liability: Statutory coverage in compliance with the Compensation laws of the State of Connecticut. Coverage shall include Employer's Liability with minimum limits of $100,000 each accident, $500,000 Disease – Policy limit, $100,000 each employee.

(e) Reserved

(f) Umbrella Liability: Excess/umbrella liability insurance may be included to meet minimum requirements. Umbrella coverage must indicate the existing underlying insurance coverage.

(g) Claims Made: Not acceptable with the exception of Professional Liability when specified.

(h) Reserved

38. Headings. The headings given to the sections in the Contract are inserted only for convenience and are in no way to be construed as part of the Contract or as a limitation of the scope of the particular section to which the heading refers.

39. Number and Gender. Whenever the context so requires, the plural or singular shall include each other and the use of any gender shall include all genders.

40. Parties. To the extent that any Contractor Party is to participate or Perform in any way, directly or indirectly in connection with the Contract, any reference in the Contract to "Contractor" shall also be deemed to include "Contractor Parties," as if such reference had originally specifically included "Contractor Parties" since it is the parties' intent for the terms "Contractor Parties" to be vested with the same respective rights and obligations as the term "Contractor."

41. Contractor Changes. The Contractor shall notify DAS in writing no later than ten (10) Days from the effective date of any change in:

a. its certificate of incorporation or other organizational document;

b. more than a controlling interest in the ownership of the Contractor; or

c. the individual(s) in charge of the Performance.

This change shall not relieve the Contractor of any responsibility for the accuracy and completeness of the Performance. DAS, after receiving written notice by the Contractor of any such change, may require such agreements, releases and other instruments evidencing, to DAS's satisfaction, that any individuals retiring or otherwise separating from the Contractor have been compensated in full or that provision has been made for compensation in full, for all work performed under terms of the Contract. The Contractor shall deliver such documents to DAS in accordance with the terms of DAS's written request. DAS may also require, and the Contractor shall deliver, a financial statement showing that solvency of the Contractor is maintained. The death of any Contractor Party, as applicable, shall not release the Contractor from the obligation to Perform under the Contract; the surviving Contractor Parties, as appropriate, must continue to Perform under the Contract until Performance is fully completed.

42. Further Assurances. The parties shall provide such information, execute and deliver any instruments and documents and take such other actions as may be necessary or reasonably requested by the other party which are not inconsistent with the provisions of this Contract and which do not involve the vesting of rights or assumption of obligations other than those provided for in the Contract, in order to give full effect to the Contract and to carry out the intent of the Contract.

43. Audit and Inspection of Plants, Places of Business and Records.

(a) The State and its agents, including, but not limited to, the Connecticut Auditors of Public Accounts, Attorney General and State's Attorney and their respective agents, may, at reasonable hours, inspect and examine all of the parts of the Contractor's and Contractor Parties' plants and places of business which, in any way, are related to, or involved in, the performance of this Contract.

(b) The Contractor shall maintain, and shall require each of the Contractor Parties to maintain, accurate and complete Records. The Contractor shall make all of its and the Contractor Parties' Records available at all reasonable hours for audit and inspection by the State and its agents.

(c) The State shall make all requests for any audit or inspection in writing and shall provide the Contractor with at least twenty-four (24) hours' notice prior to the requested audit and inspection date. If the State suspects fraud or other abuse, or in the event of an emergency, the State is not obligated to provide any prior notice.

(d) The Contractor will pay for all costs and expenses of any audit or inspection which reveals information that, in the sole determination of the State, is sufficient to constitute a breach by the Contractor under this Contract. The Contractor will remit full payment to the State for such audit or inspection no later than 30 days after receiving an invoice from the State. If the State does not receive payment within such time, the State may setoff the amount from any moneys which the State would otherwise be obligated to pay the Contractor in accordance with this Contract's Setoff provision.

(e) The Contractor shall keep and preserve or cause to be kept and preserved all of its and Contractor Parties' Records until three (3) years after the latter of (i) final payment under this Contract, or (ii) the expiration or earlier termination of this Contract, as the same may be modified for any reason. The State may request an audit or inspection at any time during this period. If any Claim or audit is started before the expiration of this period, the Contractor shall retain or cause to be retained all Records until all Claims or audit findings have been resolved.

(f) The Contractor shall cooperate fully with the State and its agents in connection with an audit or inspection. Following any audit or inspection, the State may conduct and the Contractor shall cooperate with an exit conference.

(g) The Contractor shall incorporate this entire Section verbatim into any contract or other agreement that it enters into with any Contractor Party.

44. Background Checks. The State may require that the Contractor and Contractor Parties undergo criminal background checks as provided for in the State of Connecticut Department of Emergency Services and Public Protection Administration and Operations Manual or such other State document as governs procedures for background checks. The Contractor and Contractor Parties shall cooperate fully as necessary or reasonably requested with the State and its agents in connection with such background checks.

45. Continued Performance. The Contractor and Contractor Parties shall continue to Perform their obligations under the Contract while any dispute concerning the Contract is being resolved.

46. Working and Labor Synergies. The Contractor shall be responsible for maintaining a tranquil working relationship between the Contractor work force, the Contractor Parties and their

work force, State employees, and any other contractors present at the work site. The Contractor shall quickly resolve all labor disputes which result from the Contractor's or Contractor Parties' presence at the work site, or other action under their control. Labor disputes shall not be deemed to be sufficient cause to allow the Contractor to make any claim for additional compensation for cost, expenses or any other loss or damage, nor shall those disputes be deemed to be sufficient reason to relieve the Contractor from any of its obligations under the Contract.

47. Contractor Responsibility.

(a) The Contractor shall be responsible for the entire Performance under the Contract regardless of whether the Contractor itself performs. The Contractor shall be the sole point of contact concerning the management of the Contract, including Performance and payment issues. The Contractor is solely and completely responsible for adherence by the Contractor Parties to all applicable provisions of the Contract.

(b) The Contractor shall exercise all reasonable care to avoid damage to the State's property or to property being made ready for the State's use, and to all property adjacent to any work site. The Contractor shall promptly report any damage, regardless of cause, to the State.

48. Severability. If any term or provision of the Contract or its application to any person, entity or circumstance shall, to any extent, be held to be invalid or unenforceable, the remainder of the Contract or the application of such term or provision shall not be affected as to persons, entities or circumstances other than those as to whom or to which it is held to be invalid or unenforceable. Each remaining term and provision of the Contract shall be valid and enforced to the fullest extent possible by law.

49. Confidential Information. The State will afford due regard to the Contractor's request for the protection of proprietary or confidential information which the State receives. However, all materials associated with the Bid and the Contract are subject to the terms of the Connecticut Freedom of Information Act ("FOIA") and all corresponding rules, regulations and interpretations. In making such a request, the Contractor may not merely state generally that the materials are proprietary or confidential in nature and not, therefore, subject to release to third parties. Those particular sentences, paragraphs, pages or sections that the Contractor believes are exempt from disclosure under the FOIA must be specifically identified as such. Convincing explanation and rationale sufficient to justify each exemption consistent with the FOIA must accompany the request. The rationale and explanation must be stated in terms of the prospective harm to the competitive position of the Contractor that would result if the identified material were to be released and the reasons why the materials are legally exempt from release pursuant to the FOIA. To the extent that any other provision or part of the Contract, especially including the Bid, the Records and the specifications, conflicts or is in any way inconsistent with this section, this section controls and shall apply and the conflicting provision or part shall not be given effect. If the Contractor indicates that certain documentation is submitted in confidence, by specifically and clearly marking said documentation as CONFIDENTIAL, DAS will endeavor to keep said information confidential to the extent permitted by law. DAS, however, has no obligation to initiate, prosecute or defend any legal proceeding or to seek a protective order or other similar relief to prevent disclosure of any information that is sought pursuant to a FOIA request. The Contractor shall have the burden of establishing the availability of any FOIA exemption in any proceeding where it is an issue. In no event shall DAS or the State have any liability for the disclosure of any documents or information in its possession which the State or DAS believes are required to be disclosed pursuant to the FOIA or other requirements of law.

50. References to Statutes, Public Acts, Regulations, Codes and Executive Orders.

All references in this Contract to any statute, public act, regulation, code or executive order shall mean such statute, public act, regulation, code or executive order, respectively, as it has been amended, replaced or superseded at any time. Notwithstanding any language in this Contract that relates to such statute, public act, regulation, code or executive order, and notwithstanding a lack of a formal amendment to this Contract, this Contract shall always be read and interpreted as if it contained the most current and applicable wording and requirements of such statute, public act, regulation, code or executive order as if their most current language had been used in and requirements incorporated into this Contract at the time of its execution.

51. Cross-Default.

(a) If the Contractor or Contractor Parties breach, default or in any way fail to Perform satisfactorily under the Contract, then DAS may, in its sole discretion, without more and without any action whatsoever required of the State, treat any such event as a breach, default or failure to perform under any or all other agreements or arrangements ("Other Agreements") that the Contractor or Contractor Parties have with DAS. Accordingly, DAS may then exercise at its sole option any and all of its rights or remedies provided for in the Contract or Other Agreements, either selectively or collectively and without such election being deemed to prejudice any rights or remedies of DAS, as if the Contractor or Contractor Parties had suffered a breach, default or failure to perform under the Other Agreements.

(b) If the Contractor or Contractor Parties breach, default or in any way fail to Perform satisfactorily under any or all Other Agreements with DAS or the State, then DAS may, in its sole discretion, without more and without any action whatsoever required of the State, treat any such event as a breach, default or failure to Perform under the Contract. Accordingly, the State may then exercise at its sole option any and all of its rights or remedies provided for in the Other Agreements or the Contract, either selectively or collectively and without such election being deemed to prejudice any rights or remedies of DAS or the State, as if the Contractor or Contractor Parties had suffered a breach, default or failure to Perform under the Contract.

52. Disclosure of Records. This Contract may be subject to the provisions of section 1-218 of the Connecticut General Statutes. In accordance with this statute, each contract in excess of two million five hundred thousand dollars between a public agency and a person for the performance of a governmental function shall (a) provide that the public agency is entitled to receive a copy of records and files related to the performance of the governmental function, and (b) indicate that such records and files are subject to FOIA and may be disclosed by the public agency pursuant to FOIA. No request to inspect or copy such records or files shall be valid unless the request is made to the public agency in accordance with FOIA. Any complaint by a person who is denied the right to inspect or copy such records or files shall be brought to the Freedom of Information Commission in accordance with the provisions of sections 1-205 and 1-206 of the Connecticut General Statutes.

53. Summary of State Ethics Laws. Pursuant to the requirements of section 1-101qq of the Connecticut General Statutes, the summary of State ethics laws developed by the State Ethics Commission pursuant to section 1-81b of the Connecticut General Statutes is incorporated by reference into and made a part of the Contract as if the summary had been fully set forth in the Contract.

54. Sovereign Immunity. The parties acknowledge and agree that nothing in the Invitation to Bid or the Contract shall be construed as a modification, compromise or waiver by the State of any rights or defenses of any immunities provided by Federal law or the laws of the State of Connecticut to the State or any of its officers and employees, which they may have had, now have or will have with respect to all matters arising out of the Contract. To the extent that this section conflicts with any other section, this section shall govern.

55. Time of the Essence. Time is of the essence with respect to all provisions of this Contract that specify a time for performance; provided, however, that this provision shall not be construed to limit or deprive a party of the benefits of any grace or use period allowed in this Contract.

56. Reserved.

57. Campaign Contribution Restriction. For all State contracts as defined in Conn. Gen. Stat. § 9-612(g)(1) having a value in a calendar year of $50,000 or more or a combination or series of such agreements or contracts having a value of $100,000 or more, the authorized signatory to this Contract expressly acknowledges receipt of the State Elections Enforcement Commission's notice advising state contractors of state campaign contribution and solicitation prohibitions, and will inform its principals of the contents of the notice, as set forth in "Notice to Executive Branch State Contractors and Prospective State Contractors of Campaign Contribution and Solicitation Limitations," attached as Exhibit C.

58. Reserved.

59. Protection of Confidential Information.

(a) Contractor and Contractor Parties, at their own expense, have a duty to and shall protect from a Confidential Information Breach any and all Confidential Information which they come to possess or control, wherever and however stored or maintained, in a commercially reasonable manner in accordance with current industry standards.

(b) Each Contractor or Contractor Party shall develop, implement and maintain a comprehensive data - security program for the protection of Confidential Information. The safeguards contained in such program shall be consistent with and comply with the safeguards for protection of Confidential Information, and information of a similar character, as set forth in all applicable federal and state law and written policy of DAS or State concerning the confidentiality of Confidential Information. Such data-security program shall include, but not be limited to, the following:

(1) A security policy for employees related to the storage, access and transportation of data containing Confidential Information;

(2) Reasonable restrictions on access to records containing Confidential Information, including access to any locked storage where such records are kept;

(3) A process for reviewing policies and security measures at least annually;

(4) Creating secure access controls to Confidential Information, including but not limited to passwords; and

(5) Encrypting of Confidential Information that is stored on laptops, portable devices or being transmitted electronically.

(c) The Contractor and Contractor Parties shall notify DAS, the Client Agency and the Connecticut Office of the Attorney General as soon as practical, but no later than twenty-four (24) hours, after they become aware of or suspect that any Confidential Information which Contractor or Contractor Parties have come to possess or control has been subject to a Confidential Information Breach. If a Confidential Information Breach has occurred, the Contractor shall, within three (3) business days after the notification, present a credit monitoring and protection plan to the Commissioner of Administrative Services, the Client Agency and the Connecticut Office of the Attorney General, for review and approval. Such credit monitoring or protection plan shall be made available by the Contractor at its own cost and expense to all individuals affected by the Confidential Information Breach. Such credit monitoring or protection plan shall include, but is not limited to reimbursement for the cost of placing and lifting one (1) security freeze per credit file pursuant to Connecticut General Statutes § 36a-701a. Such credit monitoring or protection plans shall be approved by the State in accordance with this Section and shall cover a length of time commensurate with the circumstances of the Confidential Information Breach. The Contractors' costs and expenses for the credit monitoring and protection plan shall not be recoverable from DAS, the Client Agency, any State of Connecticut entity or any affected individuals.

(d) The Contractor shall incorporate the requirements of this Section in all subcontracts requiring each Contractor Party to safeguard Confidential Information in the same manner as provided for in this Section.

(e) Nothing in this Section shall supersede in any manner Contractor's or Contractor Party's obligations pursuant to HIPAA or the provisions of this Contract concerning the obligations of the Contractor as a Business Associate of Covered Entity.

60. Antitrust.
Contractor hereby irrevocably assigns to the State of Connecticut all rights, title and interest in and to all Claims associated with this Contract that Contractor now has or may or will have and that arise under the antitrust laws of the United States, 15 USC Section 1, *et seq.* and the antitrust laws of the State of Connecticut, Connecticut General Statute § 35-24, *et seq.*, including but not limited to any and all Claims for overcharges. This assignment shall become valid and effective immediately upon the accrual of a Claim without any further action or acknowledgment by the parties.

61. Reserved.

EXHIBIT A

DESCRIPTION OF GOODS & SERVICES AND ADDITIONAL TERMS & CONDITIONS

1. **Description of Goods and Services**

Contractor shall supply bituminous concrete materials for pickup by Client Agency or for delivery to sites specified in the Client Agency's purchase order. Upon delivery of the bituminous concrete material, Contractor shall supply all required equipment, operators and labor necessary to on-load and off-load the bituminous concrete material. Contractor shall provide all labor, equipment, fuel for such equipment, equipment maintenance and equipment repair. Contractor shall notify the appropriate Client Agency district maintenance director forty-eight (48) hours prior to all bituminous concrete material deliveries to designated sites specified by the Client Agency.

2. **FORM 817, Standard Specifications for Roads, Bridges, Facilities and Incidental Construction (Standards)**

Reference is made in this Contract to ConnDOT's FORM 817, **"Standard Specifications for Roads, Bridges, Facilities and Incidental Construction", as mended (the "Standards").** Contractor's Performance under this Contract shall be in accordance with the Standards including all supplements and other applicable standards. The applicable portions of the Standards are incorporated herein and any terms capitalized but not defined in this Exhibit A have the meanings ascribed to them in the Standards.

The Standards are located at the below link:

http://www.ct.gov/dot/cwp/view.asp?a=3609&q=430362

3. **Definitions**

Department is defined in the most recent version of the Standards: State of Connecticut Department of Transportation.

Engineer is defined in the most recent version of the Standards: The Commissioner or Deputy Transportation Commissioner, acting directly or through a duly authorized representative.

Inspector is defined in the most recent version of the Standards: A duly authorized representative of the Engineer, assigned to make inspections of the work performed and materials supplied by the Contractor.

Laboratory is defined in the most recent version of the Standards: The official testing laboratory of the Department, unless the Department designates another laboratory to provide services in connection with the Project.

Project is defined in the most recent version of the Standards: All work included under one Department Contract, notwithstanding the occasional use by the Department of multiple project numbers, for the work included within one Contract.

4. **Material Specifications**

- **Hot Mixed Asphalt (HMA) (S0.25, S0.375, S0.5, S1.0 and Curb Mix):**

The following Hot Mixed Asphalt (HMA) (S0.25, S0.375, S0.5, S1.0 and Curb Mix) mixes must conform to the specifications of Bituminous Concrete Section 4.06 and Section M.04 (Attachment 1-

EXHIBIT A

DESCRIPTION OF GOODS & SERVICES AND ADDITIONAL TERMS & CONDITIONS

Bituminous Concrete Standards) of the FORM 817 Standards with the exception of all references to placement and compaction. All materials must be tested and approved by the Client Agency's Division of Materials Testing. Material control must conform to Section 1.06 of the Standards.

- **Cold Patch Method - Class 5, 5A, 5B:**

Requirements: This material must be capable of being stockpiled and workable at all times. A non-stripping agent approved by the Engineer shall be used in accordance with manufacturer's recommendations.

Class 5 material is without fibers.

Class 5A material must have 3/8 to ½ inch (9.5 to 12.5 millimeters) polypropylene fibers added at a minimum rate of 6 pounds per ton (3 kilograms per metric ton) of mixture.

Class 5B mixture must have ¼ inch (6.3 millimeters) polyester fibers added at the minimum rate of 2 1/2 pounds per ton (1.25 kilograms per metric ton) of mixture.

Basis of Acceptance: The Contractor shall submit to the Engineer a materials certificate for the material. The aggregates, fibers and binder (MC-250) must meet the requirements as specified in this Exhibit A. The use of recycled material is not permitted with this class of Bituminous concrete.

EXHIBIT A

DESCRIPTION OF GOODS & SERVICES AND ADDITIONAL TERMS & CONDITIONS

Ranges for Bituminous Concrete Cold Patch Mixtures					JMF Tolerance
Types		5 (a)	5A (a)	5B (a)	± Percent
Grade of PG binder		MC-250 (b)	MC-250 (b)	MC-250 (b)	
content %		6.0 - 7.5	6.0 - 7.5 (c)	6.0 - 7.5 (d)	0.4
Sieve Size					
#200	75 m m	0 - 2.5	0 - 2.5	0 - 2.5	2
#50	300 m m				4
#30	600 m m	2-15	2-15	2-15	5
#8	2.36 mm	10-45	10-45	10-45	6
#4	4.75 mm	40 - 100	40 - 100	40 - 100	7
¼"	6.3 mm				
	9.5 mm	100	100	100	8
	12.5 mm				8
3/4"	19.0 mm				8
1"	25.0 mm				
2"	50.0 mm				
Additionally, the fraction of material retained between any two consecutive sieves must not be less than 4%.					
Material Temperature					
° F (° C)		140 – 185 (60 – 85)			
Aggregate ° F (° C)		100 – 175 (38 – 79)			
Mixtures ° F (° C)		120 – 175 (49 – 79)			± 25 ° F (± 12 ° C)

(a) To help prevent stripping, the mixed material must be stockpiled on a paved surface and at a height not greater than four (4 feet)(1.2 meters)) during the first forty-eight (48 hours).
(b) Contains an approved non-stripping compound as stated in Form 817.
(c) Polypropylene Fibers - 3/8 - 1/2 inch (9.5 mm - 12.5 mm), added to the mix at a minimum rate of 6 pounds per ton (3 kilograms per metric ton). Fibers must be pre-approved by the Client Agency.
(d) Polyester Fibers - 1/4 inch (6.3 mm) added to the mix at a minimum rate of 2 1/2 lbs. per ton (1.25 kg per metric ton). Fibers must be pre-approved by the Client Agency.

EXHIBIT A

DESCRIPTION OF GOODS & SERVICES AND ADDITIONAL TERMS & CONDITIONS

- **EZ Street Cold Asphalt, GreenPatch and Quality Pavement Repair (QPR):**

EZ Street Cold Asphalt, GreenPatch and Quality Pavement Repair (QPR) are preapproved Bituminous Concrete Patching Materials (Cold Applied) under Section 22a-174-20 of the Regulation of Environmental Protection and the products are listed on page 13 of the departments Qualified Products List (QPL).

http://www.ct.gov/dot/lib/dot/documents/dresearch/conndot_qpl.pdf

5. Bituminous Concrete Material Requirements:

The following factors will be considered during the contractor selection process for the purchase of bituminous concrete materials: the distance from Contractor's plant to the related Project, general transportation considerations, placement considerations, truck capacities and contract prices. Client Agency district maintenance personnel shall determine the source of supply that best meets the needs of the Client Agency.

In placing purchase orders for bituminous concrete material to be delivered, the Client Agency reserves the right to request load sizes be based on minimum truckload.

Contractor shall be responsible for payment of all tolls and other fees associated with the delivery and pick up of bituminous concrete material.

Client Agency shall request delivery of bituminous concrete materials and provide Contractor with a schedule of deliveries. The last daily delivery to a job or Project must be no later than two (2) hours before the end of the Client Agency's scheduled work day.

If the unloading of a Contractor's truck is delayed due to the Client Agency action, delay time in excess of one half (½) hour shall be paid by Client Agency at the rate of fifteen dollars ($15.00) per quarter (¼) hour of delay. If Contractor fails to stay on schedule, including, but not limited, to equipment breakdowns and the delay is more than one half (½) hour, a charge may be imposed on Contractor to cover any additional costs incurred by the Client Agency for idle equipment, labor or other charges that may be incurred as the result of a delay.

If Contractor is providing bituminous concrete material from another company's plant, Contractor shall provide the Standard Quality Control Plan (QCP) for Production in the M.04.03 Production Requirement (as such terms are defined in the Standards) from the plant of origin and include a written statement regarding the availability of bituminous concrete materials for use on the assigned Project. The certification must also include total quantities available during the Contract term and the quantities available per day.

Contractor shall state the amount of bituminous concrete material that is available per day on a delivered basis. Material will not be accepted by Client Agency from any plant until the mix design data has been submitted by the producer and approved by Engineer. The source and location of all bituminous concrete materials must be included with the mix design data.

EXHIBIT A

DESCRIPTION OF GOODS & SERVICES AND ADDITIONAL TERMS & CONDITIONS

Contractor shall notify the Client Agency's Division of Materials Testing at least forty-eight (48) hours before production and stockpiling of cold patch (Class 5, 5A, or 5B) in order for the liquid material to be sampled and tested. Upon approval of the liquid material, Contractor shall notify the Client Agency's Division of Materials Testing of the intent to produce and stockpile such material.

Contractor shall pay for all permits and fees, provide all notices and comply with all laws, ordinances, rules and regulations of the State of Connecticut, city/town in which the delivery is to be made. When applicable, Contractor shall also conform to the Commercial Vehicle Registration requirements as specified in the Connecticut General Statute § 14-12a.

6. Contractor Selection

Contractor shall specify the materials plant(s) of origin and is responsible for notifying the Client Agency's district maintenance personnel in advance of the production schedule. The Client Agency shall arrange for proper test coverage of the identified plants only and shall not accept bituminous concrete materials from any other plant. When providing "delivered" bituminous concrete material, the delivery slip must identify the bituminous concrete materials plant of origin.

7. Delivery Requirements

After issuance of a purchase order, bituminous concrete material is to be delivered within fifteen (15) days or at a date as set by the Client Agency in the applicable purchase order. Contractor shall submit a materials certificate prior to delivery of Class 5A and 5B "cold patch" material.

The actual tonnage delivered per day will be based on the amount requested by the Client Agency's district maintenance personnel and consistent with the availability of bituminous concrete material from supplier. Quantity delivered must equal at least ninety percent (90%) of the tonnage requested by the Client Agency's district maintenance personnel up to one thousand (1,000) tons per day.

8. Adjustments

When Contractor is notified by the Client Agency that test samples from Contractor's plant on any class of bituminous concrete materials offered does not meet specifications, Contractor shall not make further deliveries of such bituminous concrete materials until Client Agency test samples have satisfactorily passed testing performed by the Client Agency's Division of Materials Testing. Client Agency shall not provide payment for unauthorized bituminous concrete material or bituminous concrete material provided which does not comply with the Standards and applicable specifications.

Bituminous concrete materials not meeting specifications, but allowed to remain in place by Client Agency (material that has been located within the roadway and compacted), will be paid for at an adjusted rate as described in Section 4.06 of Attachment 1- Bituminous Concrete Standards.

EXHIBIT A

DESCRIPTION OF GOODS & SERVICES AND ADDITIONAL TERMS & CONDITIONS

9. Geographic Locations

The geographic limits of each Section are outlined on Maintenance Section map set forth as Attachment 2- DOT Maintenance Section Map.

10. Invoices and Payments:

When ConnDOT is the Client Agency, payment and invoicing inquiries must be directed to ConnDOT's Accounts Payable Unit at 860-594-2305.

All invoices must include:

1. Contractor F.E.I.N.
2. Complete Contractor name and billing address.
3. Project number, if applicable.
4. Invoice number and date.
5. Purchase order number.
6. Itemized description of services and/or material supplied.
7. Adjustments, if applicable.
8. Quantity, unit, unit price, and extended amount.
9. Ticket numbers corresponding to each invoice must be listed or attached to the company invoice as a separate sheet, if applicable.
10. Work periods and traffic control prices must be itemized, if applicable.

For prompt payment processing, please mail invoices to the following address:

State of Connecticut
Department of Transportation
Bureau of Finance and Administration
Attn: Accounts Payable
2800 Berlin Turnpike
Newington, CT 06111

Payments may be delayed if the invoice form is not properly completed in accordance with the instructions noted above

11. Additional Terms and Conditions

(a) Contract Separately/Additional Savings Opportunities

DAS reserves the right to either seek additional discounts from the Contractor or to contract separately for a single purchase, if in the judgment of DAS, the quantity required is sufficiently large, to enable the

EXHIBIT A

DESCRIPTION OF GOODS & SERVICES AND ADDITIONAL TERMS & CONDITIONS

State to realize a cost savings, over and above the prices set forth in Exhibit B, whether or not such a savings actually occurs.

(b) Mandatory Extension to State Entities

Contractor shall offer and extend the Contract (including pricing, terms and conditions) to political sub-divisions of the State (which includes towns and municipalities), schools, and not-for-profit organizations.

(c) P-Card (Purchasing MasterCard Credit Card)

Notwithstanding the provisions of Section 4(b)(2) of the Contract, purchases may be made using the State of Connecticut Purchasing Card (MasterCard) in accordance with Memorandum No. 2011-11 issued by the Office of the State Comptroller.

Contractor shall be equipped to receive orders issued by the Client Agency using the MasterCard. The Contractor shall be responsible for the credit card user-handling fee associated with MasterCard purchases. The Contractor shall charge to the MasterCard only upon acceptance of Goods delivered to the Client Agency or the rendering of Services.

The Contractor shall capture and provide to its merchant bank, Level 3 reporting at the line item level for all orders placed by MasterCard.

Questions regarding the state of Connecticut MasterCard Program may be directed to Ms. Kerry DiMatteo, Procurement Card Program Administrator at 860-713-5072.

(d) Subcontractors

DAS must approve any and all subcontractors utilized by the Contractor in writing prior to any such subcontractor commencing any work. Contractor acknowledges that any work provided under the Contract to any state entity is work conducted on behalf of the State and that the Commissioner of DAS or his/her designee may communicate directly with any subcontractor as the State deems to be necessary or appropriate. Contractor shall be responsible for all payment or fees charged by the subcontractor(s). A performance evaluation of any subcontractor shall be provided promptly by the Contractor to DAS upon request.

Contractor must provide the majority of services described in the specifications.

(e) Prevailing Wages

Some or all of the Performance may be subject to prevailing wages. Accordingly, the following provision is included in this Contract in accordance with the requirements of Conn. Gen. Stat. Sec. 31-53(a):

The wages paid on an hourly basis to any person performing the work of any mechanic, laborer or worker on the work herein contracted to be done and the amount of payment or contribution paid or payable on behalf of each such person to any employee welfare fund, as defined in subsection (i) of

EXHIBIT A

DESCRIPTION OF GOODS & SERVICES AND ADDITIONAL TERMS & CONDITIONS

Conn. Gen. Stat. Sec. 31-53(a), shall be at a rate equal to the rate customary or prevailing for the same work in the same trade or occupation in the town in which such public works project is being constructed. Any Contractor who is not obligated by agreement to make payment or contribution on behalf of such persons to any such employee welfare fund shall pay to each mechanic, laborer or worker as part of such person's wages the amount of payment or contribution for such person's classification on each pay day.

(f) Security and/or Property Entrance Policies and Procedures

Contractor shall adhere to established security or property entrance policies and procedures or both for each requesting Client Agency. It is the responsibility of each Contractor to understand and adhere to those policies and procedures prior to any attempt to enter any Client Agency premises for the purpose of carrying out the scope of work described in this Contract.

(g) Department of Correction Requirements for Contractors who Perform at a Correctional Facility

(1) Facility Admittance

(A) Contractors shall not allow any of their employees to enter the grounds of or any structures in any Department of Correction ("DOC") facility ("Facility") or undertake any part of the Performance unless the employees have first been issued an individual, valid, security identification badge which they shall display properly at all times while at the Facility.

(B) Contractor employees who seek admittance to a DOC Facility must first undergo a background check to confirm their eligibility to be admitted into the DOC Facility. Contractors shall obtain from the DOC a form for each employee and complete and submit that form to DOC at least 10 business days prior to the date that the employee is scheduled to arrive at the DOC Facility for the Performance. Information on the form includes the following:

1. Name
2. Date of Birth
3. Social Security Number
4. Driver's License Number
5. Physical Characteristics (such as age, height, weight, etc.)

(2) Official Working Rules

Contractors shall adhere to the following Official Working Rules of the DOC:

(A) All Contractors shall report to the Facility's security front desk for sign-in, regardless of work location, immediately upon arrival at the Facility.
(B) All Contractor personnel shall work under the observation of an assigned correctional officer or supervisor, who will provide escort for the duration of the work.
(C) Contractor personnel shall not have any verbal or personal contact with any inmates.

EXHIBIT A

DESCRIPTION OF GOODS & SERVICES AND ADDITIONAL TERMS & CONDITIONS

(D) Equipment must be checked daily and, when not in use, locked in a secure place as the Facility officials may direct.
(E) Hacksaws, blades and files will remain in the custody of the officer assigned, except when being used.
(F) The correctional officials may refuse admittance to any Contractor personnel for any cause or reason the correctional officials deem to be sufficient.
(G) In the event of any emergency, all Contractor personnel will be escorted outside the Facility by correctional officials.
(H) Contractors shall address all questions pertaining to interruptions of service or to safety of the Facility to the appropriate correctional official.
(I) Work at the Facility must be Performed between 8:00 a.m. and 12:00 Noon and between 12:30 p.m. and 4:30 p.m., the maximum allowable working day being 8 hours. The Contractor shall not Perform any work at any Facility on any Saturday, Sunday or Holiday, unless DOC determines, in its sole discretion, that there is an emergency.
(J) The Contractor shall ensure that all equipment not in use, is secure to prevent use by inmates.
(K) The Contractor shall supply to DOC a copy of all material safety data sheets for all products used in the process of construction, construction materials, and products brought onto the Facility.
(L) All Contractors shall sign out at the Facility's security front desk prior to departure following completion of Performance.

(3) Rules Concerning Department of Correction Facilities

Contractors shall adhere to the Facilities rules ("Facilities Rules") described in this section. At the time that Contractors and Contractor Parties seek to enter a Facility, DOC staff will present to them a document setting forth the following Facilities Rules and extracts of the laws governing the introduction and control of contraband. Contractors and Contractors Parties shall read, understand and sign that document as a condition precedent to entering the Facility and as evidence that they understand the consequences imposed for violating these Facilities Rules:

(A) Restricted Areas

All persons except DOC personnel, upon entering the grounds are restricted to the immediate area of their work assignment. In order to go to other areas, Contractor personnel shall first obtain written permission from the supervisory correctional official in charge. Only persons having official business will be admitted to construction sites.

(B) Inmates

There may be times when inmates may be working adjacent to or in the same area as Contractor or Contractor Parties. All persons are prohibited from accepting or giving anything from and to an inmate. Inmates are accountable to DOC personnel only, no other person will have any conversation or dealings with inmates without the approval of the DOC supervisory official in charge.

(C) Vehicle Control

EXHIBIT A

DESCRIPTION OF GOODS & SERVICES AND ADDITIONAL TERMS & CONDITIONS

Any Contractor personnel entering upon the Facility shall remove the ignition keys of their vehicle and lock the vehicle when they leave it for any reason. Contractors shall ensure that all equipment in, on or around the vehicles is secured and inaccessible to anyone else while in the Facility.

(D) Contraband

Contractors shall not bring clothing or contraband into or onto the Facility's grounds or leave clothing or contraband in a vehicle located on the grounds of the Facility outside of an area designated by DOC personnel. Contraband is defined below and all persons are subject to these DOC Facilities Rules concerning contraband when on the Facility's grounds.

Contractor shall not introduce into or upon, take or send to or from, or attempt the same to or from, the grounds of the Facility anything whatsoever without the knowledge of the Facility supervisor.

"Contraband" means any tangible or intangible article whatsoever which DOC has not previously authorized and may include letters, stamps, tools, weapons, papers, floor implements, writing materials, messages (written and verbal), instruments and the like. Contractors shall discuss any questions regarding such matters with the Facility supervisor immediately upon those questions arising.

Cigarettes and Cell Phones are "contraband." Accordingly, Contractors shall leave them secured inside their locked vehicles in an area designated by DOC personnel.

Failure to comply with these Facilities Rules, in the sole determination of DOC, will result in the Contractor being removed from the Facility.

(4) State Laws Governing Unauthorized Conveyance, Possession or Use of Items, Weapons and Certain Devices

(A) Unauthorized conveyance of certain items brought into the Facility is governed by Conn. Gen. Stat. Sec. 53a-174, which provides as follows:

1. Any person not authorized by law who conveys or passes or causes to be conveyed or passed, into any correctional or humane institution or the grounds or buildings thereof, or to any inmate of such an institution who is outside the premises thereof and known to the person so conveying or passing or causing such convey or passing to be such an inmate, any controlled drug, as defined in section 21a-240, any intoxicating liquors, any firearm, weapon, dangerous instruments or explosives of any kind, any United States currency, or any rope, ladder or other instrument or device for use in making, attempting or aiding an escape, shall be guilty of a class D felony. [Penalty for a Class "D" felony per Sec. 53a-35 subsection a, b, c, d is a term not to exceed five (5) years.]The unauthorized conveying, passing, or possessing of any rope or ladder or other instrument or device, adapted for use in making or aiding an escape, into any such institution or the grounds or building thereof, shall be presumptive evidence that it was so conveyed, passed or possessed for such use.

EXHIBIT A

DESCRIPTION OF GOODS & SERVICES AND ADDITIONAL TERMS & CONDITIONS

2. Any person not authorized by law who conveys into any such institution any letter or other missive which is intended for any person confined therein, or who conveys from within the enclosure to the outside of such institution any letter or other missive written or given by any person confined therein, shall be guilty of a class A misdemeanor. [Penalty for a Class "A" misdemeanor per Sec. 53a-36 subsection 1, the term is not to exceed one (1) year.]
3. Any person or visitor who enters or attempts to enter a correctional institution or Facility by using a misleading or false name or title shall be guilty of a class A misdemeanor.

(B) Possession of weapons or dangerous instruments in the Facility is governed by Conn. Gen. Stat. Sec.53a-174a, which provides as follows:

1. A person is guilty of possession of a weapon or dangerous instrument in a correctional institution when, being an inmate of such institution, he knowingly makes, conveys from place to place or has in his possession or under his control any firearm, weapon dangerous instrument, explosive, or any other substance or thing designed to kill, injure or disable.
2. Possession of a weapon or dangerous instrument in a correctional institution is a class B felony. [Penalty for a Class "B" felony per Sec. 53a-35 subsection a, b, c, d is a term not to exceed twenty (20) years.]

(C) Conveyance or use of electronic or wireless communication devices in the Facility is governed by Conn. Gen. Stat. Sec. 53a-174b, which provides as follows:

1. A person is guilty of conveyance or use of an electronic wireless communication device in a correctional institution when such person, without authorization by the Commissioner of Correction or the commissioner's designee, (1) conveys or possesses with intent to convey an electronic wireless communication device to any inmate of a correctional institution while such inmate is in such institution, or (2) uses an electronic wireless communication device to take a photographic or digital image in a correctional institution.
2. Conveyance or use of an electronic wireless communication device in a correctional institution is a Class A misdemeanor.

Exhibit - B1		BITUMINOUS CONCRETE MATERIALS - PICK UP										
Contract #: 18PSX0311		Net Price Per Ton At Plant Loaded Into Customer's Truck										
Awarded Contractor	Plant Location	S0.25 Level 1-3	S0.375 Level 1-3	S0.5 Level 1-3	S1 Level 1-3	Curb Mix	Cold Patch (without fibers) Class 5	Cold Patch (with polypropylene fibers) Class 5A	Cold Patch (with polyester fibers) Class 5B	EZ Street Cold Patch	Greenpatch	Quality Pavement Repair
A.E.N. Asphalt Inc.	45 Lebanon Road, Franklin, CT	$ 79.00	$ 79.00	$ 74.00	$ 74.00	$ 85.00	No Bid	No Bid	No Bid	No Bid	No Bid	No Bid
Adelman Sand & Gravel Inc.	34 Bozrah Street, Bozrah, CT	No Bid	No Bid	No Bid	No Bid	No Bid	No Bid	No Bid	No Bid	No Bid	No Bid	$ 125.00
American Industries, Inc.	630 Plainfield Road, Jewett City, CT	$ 85.00	$ 85.00	$ 80.00	$ 80.00	$ 85.00	No Bid	No Bid	No Bid	No Bid	No Bid	No Bid
B. Metcalf Asphalt Paving Inc.	235 East Canaan Road, North Canaan, CT	No Bid	No Bid	No Bid	No Bid	No Bid	$ 108.00	No Bid	No Bid	No Bid	No Bid	No Bid
Galasso Materials LLC	60 South Main Street, East Granby, CT 06026	$ 71.28	$ 70.54	$ 67.25	$ 67.20	$ 78.20	No Bid	No Bid	No Bid	No Bid	$ 110.00	No Bid
Hain Materials Corp	249 Windham Center Road, Windham, CT	$ 87.00	$ 81.25	$ 76.50	No Bid	$ 88.00	No Bid	No Bid	No Bid	No Bid	No Bid	No Bid
JSL Asphalt Inc	75 King Spring, Windsor Locks, CT	$ 83.70	$ 76.70	$ 73.70	$ 76.70	$ 85.00	No Bid	No Bid	No Bid	No Bid	No Bid	No Bid
Killingly Asphalt Products, LLC	514 Wildwood Avenue, Dayville, CT	$ 82.00	$ 81.00	$ 77.50	$ 77.50	$ 87.50	No Bid	No Bid	No Bid	No Bid	No Bid	No Bid
Laydon Industries, LLC	7 Spring Street, West Haven, CT	No Bid	No Bid	No Bid	No Bid	No Bid	No Bid	No Bid	No Bid	No Bid	$ 133.20	No Bid
O & G Industries, Inc.	Bridgeport, CT	$ 84.20	$ 84.20	$ 79.48	$ 79.99	$ 93.58	$ 141.00	No Bid	$ 156.00	No Bid	$ 135.00	No Bid
O & G Industries, Inc.	Canal Street, Stamford, CT	$ 85.87	$ 86.13	$ 80.78	$ 80.78	$ 95.00	No Bid	No Bid	No Bid	No Bid	No Bid	No Bid
O & G Industries, Inc.	Davenport Street, Stamford, CT	$ 85.87	$ 86.13	$ 80.78	$ 80.78	$ 95.00	$ 150.00	No Bid	$ 165.00	No Bid	$ 135.00	No Bid
O & G Industries, Inc.	Southbury, CT	$ 75.45	$ 75.75	$ 73.70	$ 73.70	$ 90.02	$ 130.00	No Bid	$ 145.00	No Bid	$ 135.00	No Bid
O & G Industries, Inc.	Waterbury, CT	$ 79.93	$ 79.93	$ 75.87	$ 75.87	$ 90.67	No Bid	No Bid	$ 145.00	No Bid	$ 135.00	No Bid
O & G Industries, Inc.	New Milford, CT	$ 76.61	$ 77.20	$ 75.33	$ 75.33	$ 90.76	No Bid	No Bid	No Bid	No Bid	No Bid	No Bid
O & G Industries, Inc.	Harwinton/ Torrington, CT	$ 78.92	$ 78.25	$ 73.81	$ 73.81	$ 88.85	$ 140.00	No Bid	$ 155.00	No Bid	$ 135.00	No Bid
Palmer Paving Corporation	25 Blanchard Street, Palmer, MA	$ 83.50	$ 77.50	$ 72.50	No Bid	$ 79.50	No Bid	No Bid	No Bid	No Bid	No Bid	No Bid
Palmer Paving Corporation	1000 Page Boulevard, Springfield, MA	$ 83.50	$ 77.50	$ 72.50	No Bid	$ 79.50	No Bid	No Bid	No Bid	No Bid	No Bid	No Bid

Exhibit - B1		BITUMINOUS CONCRETE MATERIALS - PICK UP										
Contract #: 18PSX0311		Net Price Per Ton At Plant Loaded Into Customer's Truck										
Awarded Contractor	Plant Location	S0.25 Level 1-3	S0.375 Level 1-3	S0.5 Level 1-3	S1 Level 1-3	Curb Mix	Cold Patch (without fibers) Class 5	Cold Patch (with polypropylene fibers) Class 5A	Cold Patch (with polyester fibers) Class 5B	EZ Street Cold Patch	Greenpatch	Quality Pavement Repair
The L. Suzio Asphalt Co., Inc.	Meriden, CT	$ 87.00	$ 87.00	$ 87.00	$ 87.00	$ 96.00	$ 125.00	No Bid	No Bid	No Bid	No Bid	No Bid
Tilcon Connecticut Inc.	North Branford, CT	$ 87.45	$ 85.17	$ 79.21	$ 77.71	$ 95.50	No Bid	No Bid	No Bid	No Bid	No Bid	$ 123.95
Tilcon Connecticut Inc.	Newtown, CT	No Bid	No Bid	No Bid	No Bid	$ 101.19	No Bid	No Bid	No Bid	No Bid	No Bid	No Bid
Tilcon Connecticut Inc.	Waterbury, CT	$ 81.19	$ 78.21	$ 73.34	$ 71.00	$ 94.76	No Bid	No Bid	No Bid	No Bid	No Bid	No Bid
Tilcon Connecticut Inc.	Hamden, CT	No Bid	No Bid	No Bid	No Bid	$ 97.79	No Bid	No Bid	No Bid	No Bid	No Bid	No Bid
Tilcon Connecticut Inc.	Plainville/ New Britain, CT	$ 85.61	$ 84.41	$ 78.27	$ 76.13	$ 94.23	No Bid	No Bid	No Bid	No Bid	No Bid	$ 123.95
Tilcon Connecticut Inc.	Wallingford, CT	$ 87.06	$ 84.80	$ 79.95	$ 76.94	$ 94.41	No Bid	No Bid	No Bid	No Bid	No Bid	No Bid
Tilcon Connecticut Inc.	Manchester, CT	$ 88.89	$ 87.66	$ 81.32	$ 79.13	$ 95.92	No Bid	No Bid	No Bid	No Bid	No Bid	No Bid
Tilcon Connecticut Inc.	Old Saybrook, CT	No Bid	No Bid	No Bid	No Bid	$ 95.59	No Bid	No Bid	No Bid	No Bid	No Bid	No Bid
Tilcon Connecticut Inc.	Danbury, CT	$ 87.39	$ 85.09	$ 79.05	$ 77.87	$ 97.64	No Bid	No Bid	No Bid	No Bid	No Bid	$ 126.95
Tilcon Connecticut Inc.	Groton, CT	$ 79.49	$ 78.94	$ 72.39	No Bid	No Bid	No Bid	No Bid	No Bid	No Bid	No Bid	No Bid
Wescon Corp of Conn.	36 Elmata Avenue, Pawcatuck, CT	$ 70.00	$ 70.00	$ 70.00	$ 70.00	$ 74.00	No Bid	No Bid	No Bid	No Bid	No Bid	No Bid

Exhibit - B2	BITUMINOUS CONCRETE MATERIALS- DELIVERED													
Contract #: 18PSX0311	Net Price Per Ton													
Section	Awarded Contractor	Cold Patch (without fibers) Class 5	Awarded Contractor	Cold Patch (with polypropylene fibers) Class 5A	Awarded Contractor	Cold Patch (with polyester fibers) Class 5B	Awarded Contractor	EZ Street Cold Patch	Awarded Contractor	Greenpatch	Awarded Contractor	Quality Pavement Repair
SECTION - 11	B. Metcalf Asphalt Paving Inc.	$ 123.11	No Bid	No Bid	No Bid	No Bid	No Bid	No Bid	Galasso Materials LLC	$ 130.22	Tilcon Connecticut, Inc.	$ 138.95
SECTION - 13	B. Metcalf Asphalt Paving Inc.	$ 121.95	No Bid	No Bid	O & G Industries, Inc.	$ 160.00	No Bid	No Bid	Galasso Materials LLC	$ 131.42	Tilcon Connecticut, Inc.	$ 138.95
SECTION - 21	B. Metcalf Asphalt Paving Inc.	$ 129.59	No Bid	No Bid	No Bid	No Bid	No Bid	No Bid	Laydon Industries, LLC	$ 152.00	Tilcon Connecticut, Inc.	$ 143.95
SECTION - 23	B. Metcalf Asphalt Paving Inc.	$ 128.80	No Bid	No Bid	No Bid	No Bid	No Bid	No Bid	Laydon Industries, LLC	$ 145.00	Tilcon Connecticut, Inc.	$ 143.95
SECTION - 31	B. Metcalf Asphalt Paving Inc.	$ 124.80	No Bid	No Bid	O & G Industries, Inc.	$ 160.00	No Bid	No Bid	Laydon Industries, LLC	$ 139.00	Tilcon Connecticut, Inc.	$ 132.95
SECTION - 33	B. Metcalf Asphalt Paving Inc.	$ 131.00	No Bid	No Bid	O & G Industries, Inc.	$ 160.00	No Bid	No Bid	Laydon Industries, LLC	$ 142.50	No Bid	No Bid
SECTION - 41	B. Metcalf Asphalt Paving Inc.	$ 121.50	No Bid	No Bid	O & G Industries, Inc.	$ 160.00	No Bid	No Bid	Galasso Materials LLC	$ 133.67	Tilcon Connecticut, Inc.	$ 143.95
SECTION - 43	B. Metcalf Asphalt Paving Inc.	$ 123.79	No Bid	No Bid	O & G Industries, Inc.	$ 160.00	No Bid	No Bid	Laydon Industries, LLC	$ 142.00	Tilcon Connecticut, Inc.	$ 143.95

Bid/RFP Number: 18PSX0311
EXHIBIT C

Notice to Executive Branch State Contractors and Prospective State Contractors of Campaign Contribution and Solicitation Limitations

This notice is provided under the authority of Connecticut General Statutes §9-612(G)(2), as amended by P.A. 10-1, and is for the purpose of informing state contractors and prospective state contractors of the following law (italicized words are defined on the reverse side of this page.

CAMPAIGN CONTRIBUTION AND SOLICITATION LIMITATIONS

No *state contractor, prospective state contractor, principal of a state contractor or principal of a prospective state contractor*, with regard to a *state contract* or *state contract solicitation* with or from a state agency in the executive branch or a quasi-public agency or a holder, or principal of a holder of a valid prequalification certificate, shall make a contribution to (i) an exploratory committee or candidate committee established by a candidate for nomination or election to the office of Governor, Lieutenant Governor, Attorney General, State Comptroller, Secretary of the State or State Treasurer, (ii) a political committee authorized to make contributions or expenditures to or for the benefit of such candidates, or (iii) a party committee (which includes town committees).

In addition, no holder or principal of a holder of a valid prequalification certificate, shall make a contribution to (i) an exploratory committee or candidate committee established by a candidate for nomination or election to the office of State senator or State representative, (ii) a political committee authorized to make contributions or expenditures to or for the benefit of such candidates, or (iii) a party committee.

On and after January 1, 2011, no state contractor, prospective state contractor, principal of a state contractor or principal of a prospective state contractor, with regard to a state contract or state contract solicitation with or from a state agency in the executive branch or a quasi-public agency or a holder, or principal of a holder of a valid prequalification certificate, shall **knowingly** *solicit* contributions from the state contractor's or prospective state contractor's employees or from a *subcontractor* or *principals of the subcontractor* on behalf of (i) an exploratory committee or candidate committee established by a candidate for nomination or election to the office of Governor, Lieutenant Governor, Attorney General, State Comptroller, Secretary of the State or State Treasurer, (ii) a political committee authorized to make contributions or expenditures to or for the benefit of such candidates, or (iii) a party committee.

DUTY TO INFORM

State contractors and prospective state contractors are required to inform their principals of the above prohibitions, as applicable, and the possible penalties and other consequences of any violation thereof.

PENALTIES FOR VIOLATIONS

Contributions of solicitations of contributions made in violation of the above prohibitions may result in the following civil and criminal penalties:

Civil Penalties – Up to $2,000 or twice the amount of the prohibited contribution, whichever is greater, against a principal or a contractor. Any state contractor or prospective state contractor which fails to make reasonable efforts to comply with the provisions requiring notice to its principals of these prohibitions and possible consequences of their violations may also be subject to civil penalties of up to $2,000 or twice the amount of the prohibited contributions made by their principals.

Criminal penalties – Any knowing and willful violation of the prohibition is a Class D felony, which may subject the violator to imprisonment of not more than 5 years, or not more than $5,000 in fines, or both.

CONTRACT CONSEQUENCES

In the case of a state contractor, contributions made or solicited in violation of the above prohibitions may result in the contract being voided.

In the case of a prospective state contractor, contributions made or solicited in violation of the above prohibitions shall result in the contract described in the state contract solicitation not being awarded to the prospective state contractor, unless the State Elections Enforcement Commission determines that mitigating circumstances exist concerning such violation.

The State shall not award any other state contract to anyone found in violation of the above prohibitions for a period of one year after the election for which such contribution is made or solicited, unless the State Elections Enforcement Commission determines that mitigating circumstances exist concerning such violation.

Additional information may be found on the website of the State Elections Enforcement Commission, www.ct.gov/seec. Click on the link to "Lobbyist/Contractor Limitations."

DEFINITIONS

"State contractor" means a person, business entity or nonprofit organization that enters into a state contract. Such person, business entity or nonprofit organization shall be deemed to be a state contractor until December thirty-first of the year in which such contract terminates. "State contractor" does not include a municipality or any other political subdivision of the state, including any entities or associations duly created by the municipality or political subdivision exclusively amongst themselves to further any purpose authorized by statute or charter, or an employee in the executive or legislative branch of state government or a quasi-public agency, whether in the classified or unclassified service and full or part-time, and only in such person's capacity as a state or quasi-public agency employee.

"Prospective state contractor" means a person, business entity or nonprofit organization that (i) submits a response to a state contract solicitation by the state, a state agency or a quasi-public agency, or a proposal in response to a request for proposals by the state, a state agency or a quasi-public agency, until the contract has been entered into, or (ii) holds a valid prequalification certificate issued by the Commissioner of Administrative Services under section 4a-100. "Prospective state contractor" does not include a municipality or any other political subdivision of the state, including any entities or associations duly created by the municipality or political subdivision exclusively amongst themselves to further any purpose authorized by statute or charter, or an employee in the executive or legislative branch of state government or a quasi-public agency, whether in the classified or unclassified service and full or part-time, and only in such person's capacity as a state or quasi-public agency employee.

"Principal of a state contractor or prospective state contractor" means (i) any individual who is a member of the board of directors of, or has an ownership interest of five per cent or more in, a state contractor or prospective state contractor, which is a business entity, except for an individual who is a member of the board of directors of a nonprofit organization**,** (ii) an individual who is employed by a state contractor or prospective state contractor, which is a business entity, as president, treasurer or executive vice president, (iii) an individual who is the chief executive officer of a state contractor or prospective state contractor, which is not a business entity, or if a state contractor or prospective state contractor has no such officer, then the officer who duly possesses comparable powers and duties, (iv) an officer or an employee of any state contractor or prospective state contractor who has *managerial or discretionary responsibilities with respect to a state contract,* (v) the spouse or a *dependent child* who is eighteen years of age or older of an individual described in this subparagraph, or (vi) a political committee established or controlled by an individual described in this subparagraph or the business entity or nonprofit organization that is the state contractor or prospective state contractor.

"State contract" means an agreement or contract with the state or any state agency or any quasi-public agency, let through a procurement process or otherwise, having a value of fifty thousand dollars or more, or a combination or series of such agreements or contracts having a value of one hundred thousand dollars or more in a calendar year, for (i) the rendition of services, (ii) the furnishing of any goods, material, supplies, equipment or any items of any kind, (iii) the construction, alteration or repair of any public building or public work, (iv) the acquisition, sale or lease of any land or building, (v) a licensing arrangement, or (vi) a grant, loan or loan guarantee. "State contract" does not include any agreement or contract with the state, any state agency or any quasi-public agency that is exclusively federally funded, an education loan, a loan to an individual for other than commercial purposes or any agreement or contract between the state or any state agency and the United States Department of the Navy or the United States Department of Defense.

"State contract solicitation" means a request by a state agency or quasi-public agency, in whatever form issued, including, but not limited to, an invitation to bid, request for proposals, request for information or request for quotes, inviting bids, quotes or other types of submittals, through a competitive procurement process or another process authorized by law waiving competitive procurement.

"Managerial or discretionary responsibilities with respect to a state contract" means having direct, extensive and substantive responsibilities with respect to the negotiation of the state contract and not peripheral, clerical or ministerial responsibilities.

"Dependent child" means a child residing in an individual's household who may legally be claimed as a dependent on the federal income tax of such Individual.

"Solicit" means (A) requesting that a contribution be made, (B) participating in any fund-raising activities for a candidate committee, exploratory committee, political committee or party committee, including, but not limited to, forwarding tickets to potential contributors, receiving contributions for transmission to any such committee or bundling contributions, (C) serving as chairperson, treasurer or deputy treasurer of any such committee, or (D) establishing a political committee for the sole purpose of soliciting or receiving contributions for any committee. Solicit does not include: (i) making a contribution that is otherwise permitted by Chapter 155 of the Connecticut General Statutes; (ii) informing any person of a position taken by a candidate for public office or a public official, (iii) notifying the person of any activities of, or contact information for, any candidate for public office; or (iv) serving as a member in any party committee or as an officer of such committee that is not otherwise prohibited in this section.

"Subcontractor" means any person, business entity or nonprofit organization that contracts to perform part or all of the obligations of a state contractor's state contract. Such person, business entity or nonprofit organization shall be deemed to be a subcontractor until December thirty first of the year in which the subcontract terminates. "Subcontractor" does not include (i) a municipality or any other political subdivision of the state, including any entities or associations duly created by the municipality or political subdivision exclusively amongst themselves to further any purpose authorized by statute or charter, or (ii) an employee in the executive or legislative branch of state government or a quasi-public agency, whether in the classified or unclassified service and full or part-time, and only in such person's capacity as a state or quasi-public agency employee.

"Principal of a subcontractor" means (i) any individual who is a member of the board of directors of, or has an ownership interest of five per cent or more in, a subcontractor, which is a business entity, except for an individual who is a member of the board of directors of a nonprofit organization, (ii) an individual who is employed by a subcontractor, which is a business entity, as president, treasurer or executive vice president, (iii) an individual who is the chief executive officer of a subcontractor, which is not a business entity, or if a subcontractor has no such officer, then the officer who duly possesses comparable powers and duties, (iv) an officer or an employee of any subcontractor who has managerial or discretionary responsibilities with respect to a subcontract with a state contractor, (v) the spouse or a dependent child who is eighteen years of age or older of an individual described in this subparagraph, or (vi) a political committee established or controlled by an individual described in this subparagraph or the business entity or nonprofit organization that is the subcontractor.

Minimum Rates and Classifications
for Heavy/Highway Construction

ID#: **H** 25549

Connecticut Department of Labor
Wage and Workplace Standards Division

By virtue of the authority vested in the Labor Commissioner under provisions of Section 31-53 of the General Statutes of Connecticut, as amended, the following are declared to be the prevailing rates and welfare payments and will apply only where the contract is advertised for bid within 20 days of the date on which the rates are established. Any contractor or subcontractor not obligated by agreement to pay to the welfare and pension fund shall pay this amount to each employee as part of his/her hourly wages.

Project Number: 18PSX0311

Project Town: Statewide

FAP Number:

State Number:

Project: Bituminous Concrete Materials

CLASSIFICATION	Hourly Rate	Benefits
01) Asbestos/Toxic Waste Removal Laborers: Asbestos removal and encapsulation (except its removal from mechanical systems which are not to be scrapped), toxic waste removers, blasters. **See Laborers Group 5 and 7**		
1) Boilermaker	33.79	34% + 8.96
1a) Bricklayer, Cement Masons, Cement Finishers, Plasterers, Stone Masons	33.48	31.66
2) Carpenters, Piledrivermen	32.60	25.34

As of: Monday, January 07, 2019

Project: Bituminous Concrete Materials

2a) Diver Tenders	32.60	25.34
3) Divers	41.06	25.34
03a) Millwrights	33.14	25.74
4) Painters: (Bridge Construction) Brush, Roller, Blasting (Sand, Water, etc.), Spray	49.75	21.05
4a) Painters: Brush and Roller	33.62	21.05
4b) Painters: Spray Only	36.62	21.05
4c) Painters: Steel Only	35.62	21.05

As of: Monday, January 07, 2019

Project: Bituminous Concrete Materials

4d) Painters: Blast and Spray	36.62	21.05
4e) Painters: Tanks, Tower and Swing	35.62	21.05
5) Electrician (Trade License required: E-1,2 L-5,6 C-5,6 T-1,2 L-1,2 V-1,2,7,8,9)	40.00	25.97+3% of gross wage
6) Ironworkers: Ornamental, Reinforcing, Structural, and Precast Concrete Erection	35.47	35.14 + a
7) Plumbers (Trade License required: (P-1,2,6,7,8,9 J-1,2,3,4 SP-1,2) and Pipefitters (Including HVAC Work) (Trade License required: S-1,2,3,4,5,6,7,8 B-1,2,3,4 D-1,2,3,4 G-1, G-2, G-8, G-9)	42.62	31.21
----LABORERS---- -		
8) Group 1: Laborer (Unskilled), Common or General, acetylene burner, concrete specialist	30.05	20.10

As of: Monday, January 07, 2019

Project: Bituminous Concrete Materials

9) Group 2: Chain saw operators, fence and guard rail erectors, pneumatic tool operators, powdermen	30.30	20.10
10) Group 3: Pipelayers	30.55	20.10
11) Group 4: Jackhammer/Pavement breaker (handheld); mason tenders (cement/concrete), catch basin builders, asphalt rakers, air track operators, block paver, curb setter and forklift operators	30.55	20.10
12) Group 5: Toxic waste removal (non-mechanical systems)	32.05	20.10
13) Group 6: Blasters	31.80	20.10
Group 7: Asbestos/lead removal, non-mechanical systems (does not include leaded joint pipe)	31.05	20.10
Group 8: Traffic control signalmen	16.00	20.10

As of: Monday, January 07, 2019

Group 9: Hydraulic Drills	29.30	18.90

----LABORERS (TUNNEL CONSTRUCTION, FREE AIR). Shield Drive and Liner Plate Tunnels in Free Air.----

13a) Miners, Motormen, Mucking Machine Operators, Nozzle Men, Grout Men, Shaft & Tunnel Steel & Rodmen, Shield & Erector, Arm Operator, Cable Tenders	32.22	20.10 + a
13b) Brakemen, Trackmen	31.28	20.10 + a

----CLEANING, CONCRETE AND CAULKING TUNNEL----

14) Concrete Workers, Form Movers, and Strippers	31.28	20.10 + a
15) Form Erectors	31.60	20.10 + a

Project: Bituminous Concrete Materials

----ROCK SHAFT LINING, CONCRETE, LINING OF SAME AND TUNNEL IN FREE AIR:----

16) Brakemen, Trackmen, Tunnel Laborers, Shaft Laborers	31.28	20.10 + a
17) Laborers Topside, Cage Tenders, Bellman	31.17	20.10 + a
18) Miners	32.22	20.10 + a

----TUNNELS, CAISSON AND CYLINDER WORK IN COMPRESSED AIR: ----

18a) Blaster	38.53	20.10 + a
19) Brakemen, Trackmen, Groutman, Laborers, Outside Lock Tender, Gauge Tenders	38.34	20.10 + a

20) Change House Attendants, Powder Watchmen, Top on Iron Bolts	36.41	20.10 + a
21) Mucking Machine Operator	39.11	20.10 + a
----TRUCK DRIVERS----(*see note below)		
Two axle trucks	29.13	23.33 + a
Three axle trucks; two axle ready mix	29.23	23.33 + a
Three axle ready mix	29.28	23.33 + a
Four axle trucks, heavy duty trailer (up to 40 tons)	29.33	23.33 + a

Project: Bituminous Concrete Materials

Four axle ready-mix	29.38	23.33 + a
Heavy duty trailer (40 tons and over)	29.58	23.33 + a
Specialized earth moving equipment other than conventional type on-the road trucks and semi-trailer (including Euclids)	29.38	23.33 + a
----POWER EQUIPMENT OPERATORS----		
Group 1: Crane handling or erecting structural steel or stone, hoisting engineer (2 drums or over), front end loader (7 cubic yards or over), Work Boat 26 ft. & Over, Tunnel Boring Machines. (Trade License Required)	39.55	24.30 + a
Group 2: Cranes (100 ton rate capacity and over); Excavator over 2 cubic yards; Piledriver ($3.00 premium when operator controls hammer); Bauer Drill/Caisson. (Trade License Required)	39.23	24.30 + a
Group 3: Excavator/Backhoe under 2 cubic yards; Cranes (under 100 ton rated capacity), Gradall; Master Mechanic; Hoisting Engineer (all types of equipment where a drum and cable are used to hoist or drag material regardless of motive power of operation), Rubber Tire Excavator (Drott-1085 or similar);Grader Operator; Bulldozer Fine Grade (slopes, shaping, laser or GPS, etc.). (Trade License Required)	38.49	24.30 + a

As of: Monday, January 07, 2019

Project: Bituminous Concrete Materials

Group 4: Trenching Machines; Lighter Derrick; Concrete Finishing Machine; CMI Machine or Similar; Koehring Loader (Skooper)	38.10	24.30 + a
Group 5: Specialty Railroad Equipment; Asphalt Paver; Asphalt Spreader; Asphalt Reclaiming Machine; Line Grinder; Concrete Pumps; Drills with Self Contained Power Units; Boring Machine; Post Hole Digger; Auger; Pounder; Well Digger; Milling Machine (over 24" Mandrell)	37.51	24.30 + a
Group 5 continued: Side Boom; Combination Hoe and Loader; Directional Driller.	37.51	24.30 + a
Group 6: Front End Loader (3 up to 7 cubic yards); Bulldozer (rough grade dozer).	37.20	24.30 + a
Group 7: Asphalt Roller; Concrete Saws and Cutters (ride on types); Vermeer Concrete Cutter; Stump Grinder; Scraper; Snooper; Skidder; Milling Machine (24" and Under Mandrel).	36.86	24.30 + a
Group 8: Mechanic, Grease Truck Operator, Hydroblaster, Barrier Mover, Power Stone Spreader; Welder; Work Boat under 26 ft.; Transfer Machine.	36.46	24.30 + a
Group 9: Front End Loader (under 3 cubic yards), Skid Steer Loader regardless of attachments (Bobcat or Similar); Fork Lift, Power Chipper; Landscape Equipment (including hydroseeder).	36.03	24.30 + a

As of: Monday, January 07, 2019

Project: Bituminous Concrete Materials

Group 10: Vibratory Hammer, Ice Machine, Diesel and Air Hammer, etc.	33.99	24.30 + a
Group 11: Conveyor, Earth Roller; Power Pavement Breaker (whiphammer), Robot Demolition Equipment.	33.99	24.30 + a
Group 12: Wellpoint Operator.	33.93	24.30 + a
Group 13: Compressor Battery Operator.	33.35	24.30 + a
Group 14: Elevator Operator; Tow Motor Operator (Solid Tire No Rough Terrain).	32.21	24.30 + a
Group 15: Generator Operator; Compressor Operator; Pump Operator; Welding Machine Operator; Heater Operator.	31.80	24.30 + a
Group 16: Maintenance Engineer/Oiler	31.15	24.30 + a

As of: Monday, January 07, 2019

Project: Bituminous Concrete Materials

Group 17: Portable asphalt plant operator; portable crusher plant operator; portable concrete plant operator.	35.46	24.30 + a
Group 18: Power Safety Boat; Vacuum Truck; Zim Mixer; Sweeper; (minimum for any job requiring CDL license).	33.04	24.30 + a

**NOTE: SEE BELOW

----LINE CONSTRUCTION----(Railroad Construction and Maintenance)----

20) Lineman, Cable Splicer, Technician	48.19	6.5% + 22.00
21) Heavy Equipment Operator	42.26	6.5% + 19.88
22) Equipment Operator, Tractor Trailer Driver, Material Men	40.96	6.5% + 19.21

As of: Monday, January 07, 2019

Project: Bituminous Concrete Materials

23) Driver Groundmen	26.50	6.5% + 9.00
23a) Truck Driver	40.96	6.5% + 17.76

----LINE CONSTRUCTION----

24) Driver Groundmen	30.92	6.5% + 9.70
25) Groundmen	22.67	6.5% + 6.20
26) Heavy Equipment Operators	37.10	6.5% + 10.70
27) Linemen, Cable Splicers, Dynamite Men	41.22	6.5% + 12.20

As of: Monday, January 07, 2019

Project: Bituminous Concrete Materials

28) Material Men, Tractor Trailer Drivers, Equipment Operators	35.04	6.5% + 10.45

As of: Monday, January 07, 2019

Project: Bituminous Concrete Materials

Welders: Rate for craft to which welding is incidental.

**Note: Hazardous waste removal work receives additional $1.25 per hour for truck drivers.*

***Note: Hazardous waste premium $3.00 per hour over classified rate*

ALL Cranes: When crane operator is operating equipment that requires a fully licensed crane operator to operate he receives an extra $4.00 premium in addition to the hourly wage rate and benefit contributions:

1) Crane handling or erecting structural steel or stone; hoisting engineer (2 drums or over)

2) Cranes (100 ton rate capacity and over) Bauer Drill/Caisson

3) Cranes (under 100 ton rated capacity)

Crane with 150 ft. boom (including jib) - $1.50 extra
Crane with 200 ft. boom (including jib) - $2.50 extra
Crane with 250 ft. boom (including jib) - $5.00 extra
Crane with 300 ft. boom (including jib) - $7.00 extra
Crane with 400 ft. boom (including jib) - $10.00 extra

All classifications that indicate a percentage of the fringe benefits must be calculated at the percentage rate times the "base hourly rate".

Apprentices duly registered under the Commissioner of Labor's regulations on "Work Training Standards for Apprenticeship and Training Programs" Section 31-51-d-1 to 12, are allowed to be paid the appropriate percentage of the prevailing journeymen hourly base and the full fringe benefit rate, providing the work site ratio shall not be less than one full-time journeyperson instructing and supervising the work of each apprentice in a specific trade.

~~Connecticut General Statute Section 31-55a: Annual Adjustments to wage rates by contractors doing state work ~~

The Prevailing wage rates applicable to this project are subject to annual adjustments each July 1st for the duration of the project.

Each contractor shall pay the annual adjusted prevailing wage rate that is in effect each July 1st, as posted by the Department of Labor.

It is the contractor's responsibility to obtain the annual adjusted prevailing wage rate increases directly from the Department of Labor's website.

The annual adjustments will be posted on the Department of Labor's Web page: www.ct.gov/dol.

The Department of Labor will continue to issue the initial prevailing wage rate schedule to the Contracting Agency for the project.

All subsequent annual adjustments will be posted on our Web Site for contractor access.

Contracting Agencies are under no obligation pursuant to State labor law to pay any increase due to the annual adjustment provision.

As of: Monday, January 07, 2019

Project: Bituminous Concrete Materials

Effective October 1, 2005 - Public Act 05-50: any person performing the work of any mechanic, laborer, or worker shall be paid prevailing wage

All Person who perform work ON SITE must be paid prevailing wage for the appropriate mechanic, laborer, or worker classification.

All certified payrolls must list the hours worked and wages paid to All Persons who perform work ON SITE regardless of their ownership i.e.: (Owners, Corporate Officers, LLC Members, Independent Contractors, et. al)

Reporting and payment of wages is required regardless of any contractual relationship alleged to exist between the contractor and such person.

~~Unlisted classifications needed for work not included within the scope of the classifications listed may be added after award only as provided in the labor standards contract clause (29 CFR 5.5 (a) (1) (ii)).

Please direct any questions which you may have pertaining to classification of work and payment of prevailing wages to the Wage and Workplace Standards Division, telephone (860)263-6790.

As of: Monday, January 07, 2019

SECTION 4.06
BITUMINOUS CONCRETE

4.06.01—Description
4.06.02—Materials
4.06.03—Construction Methods
1. **Material Documentation**
2. **Transportation of Mixture**
3. **Paving Equipment**
4. **Test Section**
5. **Transitions for Roadway Surface**
6. **Spreading and Finishing of Mixture**
7. **Longitudinal Joint Construction Methods**
8. **Contractor Quality Control (QC) Requirements**
9. **Temperature and Seasonal Requirements**
10. **Field Density**
11. **Acceptance Sampling and Testing**
12. **Density Dispute Resolution Process**
13. **Corrective Work Procedure**
14. **Protection of the Work**
15. **Cut Bituminous Concrete Pavement**

4.06.04—Method of Measurement
4.06.05—Basis of Payment

4.06.01—Description: Work under this Section shall include the production, delivery, placement and compaction of a uniform textured, non-segregated, smooth bituminous concrete pavement to the grade and cross section shown on the plans.

The following terms as used in this specification are defined as:

Bituminous Concrete: A composite material consisting of prescribed amounts of asphalt binder and aggregates. Asphalt binder may also contain additives engineered to modify specific properties and/or behavior of the composite material. References to bituminous concrete apply to all of its forms, such as those identified as hot-mix asphalt (HMA) or polymer-modified asphalt (PMA).

Bituminous Concrete Plant (Plant): A structure where aggregates and asphalt binder are combined in a controlled fashion into a bituminous concrete mixture suitable for forming pavements and other paved surfaces.

Course: A continuous layer (a lift or multiple lifts) of the same bituminous concrete mixture placed as part of the pavement structure.

Density Lot: The total tonnage of all bituminous concrete placed in a single lift which are:

PWL density lots = When the project total estimated quantity per mixture is larger than 3,500 tons

Simple Average density lots = When the project total estimated quantity per mixture is 3,500 tons or less

Disintegration: Erosion or fragmentation of the pavement surface which can be described as polishing, weathering-oxidizing, scaling, spalling, raveling, or formation of potholes.

Dispute Resolution: A procedure used to resolve conflicts between the Engineer and the Contractor's results that may affect payment.

Hot Mix Asphalt (HMA): A bituminous concrete mixture typically produced at 325°F.

Job Mix Formula (JMF): A recommended aggregate gradation and asphalt binder content to achieve the required mixture properties.

Lift: An application of a bituminous concrete mixture placed and compacted to a specified thickness in a single paver pass.

Percent Within Limits (PWL): The percentage of the lot falling between the Upper Specification Limit (USL) and the Lower Specification Limit (LSL).

Polymer Modified Asphalt (PMA): A bituminous concrete mixture containing a polymer-modified asphalt binder and using a qualified warm mix technology.

Production Lot: The total tonnage of a bituminous concrete mixture from a single source that may receive an adjustment.

Production Sub Lot: Portion of the production lot typically represented by a single sample.

Quality Assurance (QA): All those planned and systematic actions necessary to provide CTDOT the confidence that a Contractor will perform the work as specified in the Contract.
Quality Control (QC): The sum total of activities performed by the vendor (Producer, Manufacturer, and Contractor) to ensure that a product meets contract specification requirements.
Superpave: A bituminous concrete mix design used in mixtures designated as "S*" Where "S" indicates Superpave and * indicates the sieve related to the nominal maximum aggregate size of the mix.
Segregation: A non-uniform distribution of a bituminous concrete mixture in terms of gradation, temperature, or volumetric properties.
Warm Mix Asphalt (WMA) Technology: A qualified additive or technology that may be used to produce a bituminous concrete at reduced temperatures and/or increase workability of the mixture.

4.06.02—Materials: All materials shall meet the requirements of Section M.04.

1. Materials Supply: The bituminous concrete mixture must be from one source of supply and originate from one Plant unless authorized by the Engineer.

2. Recycled Materials: Reclaimed Asphalt Pavement (RAP), Crushed Recycled Container Glass (CRCG), Recycled Asphalt Shingles (RAS), or crumb rubber (CR) from recycled tires may be incorporated in bituminous concrete mixtures in accordance with Project Specifications.

4.06.03—Construction Methods

1. Material Documentation: All vendors producing bituminous concrete must have Plants with automated vehicle-weighing scales, storage scales, and material feeds capable of producing a delivery ticket containing the information below.

a. State of Connecticut printed on ticket.
b. Name of Producer, identification of Plant, and specific storage silo if used.
c. Date and time.
d. Mixture Designation, mix type and level. Curb mixtures for machine-placed curbing must state "curb mix only."
e. If WMA Technology is used, "-W"must be listed following the mixture designation.
f. Net weight of mixture loaded into the vehicle. (When RAP and/or RAS is used, the moisture content shall be excluded from mixture net weight.)
g. Gross weight (equal to the net weight plus the tare weight or the loaded scale weight).
h. Tare weight of vehicle (daily scale weight of the empty vehicle).
i. Project number, purchase order number, name of Contractor (if Contractor other than Producer).
j. Vehicle number - unique means of identification of vehicle.
k. For Batch Plants: individual aggregate, recycled materials, and virgin asphalt max/target/min weights when silos are not used.
l. For every mixture designation: the running daily and project total delivered and sequential load number.

The net weight of mixture loaded into the vehicle must be equal to the cumulative measured weights of its components.

The Contractor must notify the Engineer immediately if, during production, there is a malfunction of the weight recording system in the automated Plant. Manually written tickets containing all required information will be allowed for no more than 1 hour.

The State reserves the right to have an Inspector present to monitor batching and/or weighing operations.

2. Transportation of Mixture: The mixture shall be transported in vehicles that are clean of all foreign material, excessive coating or cleaning agents, and that have no gaps through which material might spill. Any material spilled during the loading or transportation process shall be quantified by re-weighing the vehicle. The Contractor shall load vehicles uniformly so that segregation is minimized. Loaded vehicles shall be tightly covered with waterproof covers acceptable to the Engineer. Mesh covers are prohibited. The cover must minimize air infiltration. Vehicles found not to be in conformance shall not be loaded

Vehicles with loads of bituminous concrete being delivered to State projects must not exceed the statutory or permitted load limits referred to as gross vehicle weight (GVW). The Contractor shall furnish a list and allowable weights of all vehicles transporting mixture. The State reserves the right to check the gross and tare weight of any vehicle. If the gross or tare weight varies from that shown on the delivery ticket by more than 0.4%, the Engineer will recalculate the net weight. The Contractor shall correct the discrepancy to the

satisfaction of the Engineer.

If a vehicle delivers mixture to the Project and the delivery ticket indicates that the vehicle is overweight, the load may not be rejected but a "Measured Weight Adjustment" will be taken in accordance with Article 4.06.04.

Vehicle body coating and cleaning agents must not have a deleterious effect on the mixture. The use of solvents or fuel oil, in any concentration, is prohibited for the coating of vehicle bodies.

For each delivery, the Engineer shall be provided a clear, legible copy of the delivery ticket.

3. Paving Equipment: The Contractor shall have the necessary paving and compaction equipment at the Project Site to perform the work. All equipment shall be in good working order and any equipment that is worn, defective, or inadequate for performance of the work shall be repaired or replaced by the Contractor to the satisfaction of the Engineer. During the paving operation, the use of solvents or fuel oil, in any concentration, is strictly prohibited as a release agent or cleaner on any paving equipment (i.e., rollers, pavers, transfer devices, etc.).

Refueling or cleaning of equipment is prohibited in any location on the Project where fuel or solvents might come in contact with paved areas or areas to be paved. Solvents used in cleaning mechanical equipment or hand tools shall be stored clear of areas paved or to be paved. Before any such equipment and tools are cleaned, they shall be moved off of areas paved or to be paved.

Pavers: Each paver shall have a receiving hopper with sufficient capacity to provide for a uniform spreading operation and a distribution system that places the mix uniformly, without segregation. The paver shall be equipped with and use a vibratory screed system with heaters or burners. The screed system shall be capable of producing a finished surface of the required evenness and texture without tearing, shoving, or gouging the mixture. Pavers with extendible screed units as part of the system shall have auger extensions and tunnel extenders as necessary. Automatic screed controls for grade and slope shall be used at all times unless otherwise authorized by the Engineer. The controls shall automatically adjust the screed to compensate for irregularities in the preceding course or existing base. The controls shall maintain the proper transverse slope and be readily adjustable, and shall operate from a fixed or moving reference such as a grade wire or floating beam.

Rollers: All rollers shall be self-propelled and designed for compaction of bituminous concrete. Roller types shall include steel wheeled, pneumatic, or a combination thereof. Rollers that operate in a dynamic mode shall have drums that use a vibratory or oscillatory system or combination. Vibratory rollers shall be equipped with indicators for amplitude, frequency, and speed settings/readouts to measure the impacts per foot during the compaction process. Oscillatory rollers shall be equipped with frequency indicators. Rollers can operate in the dynamic mode using the oscillatory system on concrete structures such as bridges and catch basins if at the lowest frequency setting.

Pneumatic tire rollers shall be equipped with wide-tread compaction tires capable of exerting an average contact pressure from 60 to 90 psi uniformly over the surface. The Contractor shall furnish documentation to the Engineer regarding tire size, pressure and loading to confirm that the proper contact pressure is being developed and that the loading and contact pressure are uniform for all wheels.

Lighting: For paving operations which will be performed during hours of darkness the paving equipment shall be equipped with lighting fixtures as described below or with an approved equal. Lighting shall minimize glare to passing traffic. The lighting options and minimum number of fixtures are listed in Tables 4.06-1 and 4.06-2.

TABLE 4.06-1: Minimum Paver lighting

Option	Fixture Configuration	Fixture Quantity	Requirement
1	Type A	3	Mount over screed area
	Type B (narrow) or Type C (spot)	2	Aim to auger and guideline
	Type B (wide)or Type C (flood)	2	Aim 25feet behind paving machine
2	Type D Balloon	2	Mount over screed area

TABLE 4.06-2: Minimum Roller Lighting

Option	Fixture Configuration	Fixture Quantity	Requirement
1	Type B (wide)	2	Aim 50 feet in front of and behind roller
	Type B (narrow)	2	Aim 100 feet in front of and behind roller
2	Type C (flood)	2	Aim 50 feet in front of and behind roller
	Type C (spot)	2	Aim 100 feet in front of and behind roller
3	Type D Balloon	1	Mount above the roller

*All fixtures shall be mounted above the roller.

Type A: Fluorescent fixture shall be heavy duty industrial type. Each fixture shall have a minimum output of 8,000 lumens. The fixtures shall be mounted horizontally and be designed for continuous row installation.

Type B: Each floodlight fixture shall have a minimum output of 18,000 lumens.

Type C: Each fixture shall have a minimum output of 19,000 lumens.

Type D: Balloon light – each balloon light fixture shall have minimum output of 50,000 lumens and emit light equally in all directions.

Material Transfer Vehicle (MTV): A MTV shall be used when placing bituminous concrete surface course (a lift or multiple lifts) as indicated in the Contract except as noted on the plans or as directed by the Engineer. In addition, continuous paving lengths of less than 500 feet may not require the use of a MTV as determined by the Engineer.

The MTV must be a vehicle specifically designed for the purpose of delivering the bituminous concrete mixture from the delivery vehicle to the paver. The MTV must continuously remix the bituminous concrete mixture throughout the placement process.

The use of a MTV will be subject to the requirements stated in Article 1.07.05 Load Restrictions. The Engineer may limit the use of the vehicle if it is determined that the use of the MTV may damage highway components, utilities, or bridges. The Contractor shall submit to the Engineer at time of pre-construction the following information:

1. The make and model of the MTV.
2. The individual axle weights and axle spacing for each piece of paving equipment (haul vehicle, MTV and paver).
3. A working drawing showing the axle spacing in combination with all pieces of equipment that will comprise the paving echelon.

4. Test Section: The Engineer may require the Contractor to place a test section whenever the requirements of this specification or Section M.04 are not met.

The Contractor shall submit the quantity of mixture to be placed and the location of the test section for review and approval by the Engineer. The same equipment used in the construction of a passing test section shall be used throughout production.

If a test section fails to meet specifications, the Contractor shall stop production, make necessary adjustments to the job mix formula, Plant operations, or procedures for placement and compaction. The Contractor shall construct test sections, as allowed by the Engineer, until all the required specifications are met. All test sections shall also be subject to removal as set forth in Article 1.06.04.

5. Transitions for Roadway Surface: Transitions shall be formed at any point on the roadway where the pavement surface deviates, vertically, from the uniform longitudinal profile as specified on the plans. Whether formed by milling or by bituminous concrete mixture, all transition lengths shall meet the criteria below unless otherwise specified.

Permanent Transitions: Defined as any gradual change in pavement elevation that remains as a permanent part of the work.

A transition shall be constructed no closer than 75 feet from either side of a bridge expansion joint or parapet. All permanent transitions, leading and trailing ends shall meet the following length requirements:

Posted Speed Limit	Permanent Transition Length Required
> 35 mph	30 feet per inch of elevation change
35 mph or less	15 feet per inch of elevation change

In areas where it is impractical to use the above-described permanent transition lengths, the use of a shorter permanent transition length may be permitted when approved by the Engineer.

Temporary Transitions: Defined as a transition that does not remain a permanent part of the work. All temporary transitions shall meet the following length requirements:

Posted Speed Limit	Temporary Transition Length Required
> 50 mph	Leading Transition: 15 feet per inch of vertical change (thickness) Trailing Transition: 6 feet per inch of vertical change (thickness)
40, 45 or 50 mph	Leading and Trailing: 4 feet per inch of vertical change (thickness)
35 mph or less	Leading and Trailing: 3 feet per inch of vertical change (thickness)

Note: Any temporary transition to be in place over the winter shutdown period or during extended periods of inactivity (more than 14 calendar days) shall meet the greater than 50 mph requirements shown above.

6. Spreading and Finishing of Mixture: Prior to the placement of the mixture, the underlying base course shall be brought to the plan grade and cross section within the allowable tolerance.

Immediately before placing a bituminous concrete lift, a uniform coating of tack coat shall be applied to all existing underlying pavement surfaces and on the exposed surface of a wedge joint. Such surfaces shall be clean and dry. Sweeping or other means acceptable to the Engineer shall be used.

The mixture shall not be placed whenever the surface is wet or frozen.

Tack Coat Application: The tack coat shall be applied by a pressurized spray system that results in uniform overlapping coverage at an application rate of 0.03 to 0.05 gal./s.y. for a non-milled surface and an application rate of 0.05 to 0.07 gal./s.y. for a milled surface. For areas where both milled and un-milled surfaces occur, the tack coat shall be an application rate of 0.03 to 0.05 gal /s.y. The Engineer must approve the equipment and the method of measurement prior to use. The material for tack coat shall be heated to 160°F ± 10°F and shall not be further diluted.

Tack coat shall be allowed sufficient time to break prior to any paving equipment or haul vehicles driving on it.

The Contractor may request to omit the tack coat application between bituminous concrete layers that have not been exposed to traffic and are placed during the same work shift. Requests to omit tack coat application on the upper and lower surfaces of a wedge joint will not be considered.

Placement: The mixture shall be placed and compacted to provide a smooth, dense surface with a uniform texture and no segregation at the specified thickness and dimensions indicated in the plans and specifications.

When unforeseen weather conditions prevent further placement of the mixture, the Engineer is not obligated to accept or place the bituminous concrete mixture that is in transit from the Plant.

In advance of paving, traffic control requirements shall be set up, maintained throughout placement, and shall not be removed until all associated work including density testing is completed.

The mixture temperature will be verified by means of a probe or infrared type of thermometer. The placement temperature range shall be listed in the quality control plan (QCP) for placement and meet the requirements of Table M.04.03-4. Any HMA material that that falls outside the specified temperature range as measured by a probe thermometer may be rejected.

The Contractor shall inspect the newly placed pavement for defects in mixture or placement before rolling is started. Any deviation from standard crown or section shall be immediately remedied by placing additional mixture or removing surplus mixture. Such defects shall be corrected to the satisfaction of the Engineer.

Where it is impracticable due to physical limitations to operate the paving equipment, the Engineer may permit the use of other methods or equipment. Where hand spreading is permitted, the mixture shall be placed by means of suitable shovels and other tools, and in a uniformly loose layer at a thickness that will result in a completed pavement meeting the designed grade and elevation.

Placement Tolerances: Each lift of bituminous concrete placed at a specified thickness shall meet the following requirements for thickness and area. Any pavement exceeding these limits shall be subject to an adjustment or removal. Lift tolerances will not relieve the Contractor from meeting the final designed grade. Lifts of specified non-uniform thickness, i.e. wedge or shim course, shall not be subject to thickness and area adjustments.

a) Thickness: Where the average thickness of the lift exceeds that shown on the plans beyond the tolerances shown in Table 4.06-3, the Engineer will calculate the thickness adjustment in accordance with Article 4.06.04.

TABLE 4.06-3: Thickness Tolerances

Mixture Designation	Lift Tolerance
S1	+/- 3/8 inch
S0.25, S0.375, S0.5	+/- 1/4 inch

Where the thickness of the lift of mixture is less than that shown on the plans beyond the tolerances shown in Table 4.06-3, the Contractor, with the approval of the Engineer, shall take corrective action in accordance with this Section.

b) Area: Where the width of the lift exceeds that shown on the plans by more than the specified thickness, the Engineer will calculate the area adjustment in Article 4.06.04.

c) Delivered Weight of Mixture: When the delivery ticket shows that the truck exceeds the allowable gross weight for the vehicle type, the Engineer will calculate the weight adjustment in accordance with Article 4.06.04.

Transverse Joints: All transverse joints shall be formed by saw-cutting to expose the full thickness of the lift. Tack coat shall be applied to the sawn face immediately prior to additional mixture being placed.

Compaction: The Contractor shall compact the mixture to meet the density requirements as stated in Article 4.06.04 and eliminate all roller marks without displacement, shoving cracking, or aggregate breakage.

When placing a lift with a specified thickness less than 1 1/2 inches, or a wedge course, the Contractor shall provide a minimum rolling pattern as determined by the development of a compaction curve. The procedure to be used shall be documented in the Contractor's QCP for placement and demonstrated on the first day of placement.

The use of the vibratory system on concrete structures is prohibited. When approved by the Engineer, the Contractor may operate a roller using an oscillatory system at the lowest frequency setting.

If the Engineer determines that the use of compaction equipment in the dynamic mode may damage highway components, utilities or adjacent property, the Contractor shall provide alternate compaction equipment.

Rollers operating in the dynamic mode shall be shut off when changing directions.

These allowances will not relieve the Contractor from meeting pavement compaction requirements.

Surface Requirements:

Each lift of the surface course shall not vary more than 1/4 inch from a Contractor-supplied 10 foot straightedge. For all other lifts of bituminous concrete, the tolerance shall be 3/8 inch. Such tolerance will apply to all paved areas.

Any surface that exceeds these tolerances shall be corrected by the Contractor at its own expense.

7. Longitudinal Joint Construction Methods: The Contractor shall use Method I - Notched Wedge Joint (see Figure 4.06-1) when constructing longitudinal joints where lift thicknesses are 1 ½ inches to 3 inches. S1.0 mixtures shall be excluded from using Method I. Method II - Butt Joint (see Figure 4.06-2) shall be used for lifts less than 1 1/2 inches or greater than 3 inches. Each longitudinal joint shall maintain a consistent offset from the centerline of the roadway along its entire length. The difference in elevation

between the two faces of any completed longitudinal joint shall not exceed 1/4 inch at any location.

Method I - Notched Wedge Joint:

A notched wedge joint shall be constructed as shown in Figure 4.06-1 using a device that is attached to the paver screed and is capable of independently adjusting the top and bottom vertical notches. The device shall have an integrated vibratory system. The top vertical notch must be located at the centerline or lane line in the final lift. The requirement for paving full width "curb to curb" as described in Method II may be waived if addressed in the QC plan and approved by the Engineer.

The taper portion of the wedge joint shall be evenly compacted using equipment other than the paver or notch wedge joint device. The compaction device shall be the same width as the taper and not reduce the angle of the wedge or ravel the top notch of the joint during compaction.

When placed on paved surfaces, the area below the sloped section of the joint shall be treated with tack coat. The top surface of the sloped section of the joint shall be treated with tack coat prior to placing the completing pass.

The taper portion of the wedge joint shall not be exposed to traffic for more than 5 calendar days.

Figure 4.06-1: Notched Wedge Joint (Not to Scale)

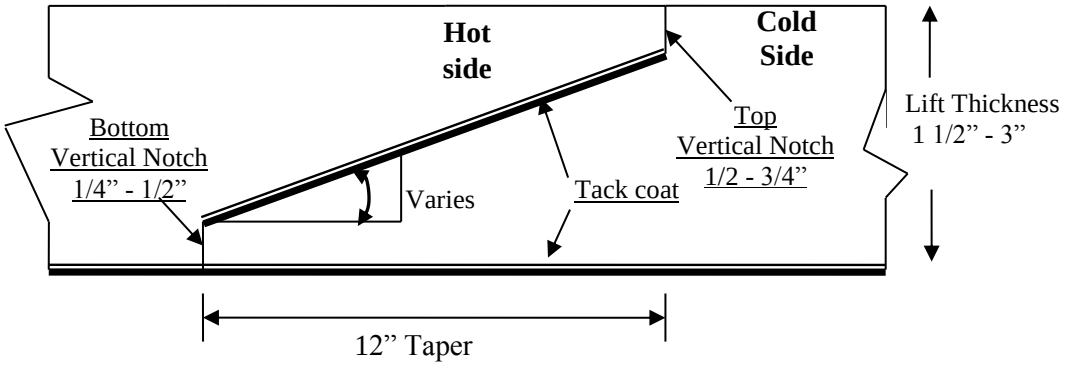

Any exposed wedge joint must be located to allow for the free draining of water from the road surface.

The Engineer reserves the right to define the paving limits when using a wedge joint that will be exposed to traffic.

If Method I cannot be used on those lifts which are 1 ½ inches to 3 inches, Method III may be substituted according to the requirements below for "Method III - Butt Joint with Hot Poured Rubberized Asphalt Treatment."

Method II - Butt Joint:

When adjoining passes are placed, the Contractor shall use the end gate to create a near vertical edge (refer to Figure 4.06-2). The completing pass (hot side) shall have sufficient mixture so that the compacted thickness is not less than the previous pass (cold side). During placement of multiple lifts, the longitudinal joint shall be constructed in such a manner that it is located at least 6 inch from the joint in the lift immediately below. The joint in the final lift shall be at the centerline or at lane lines. The end gate on the paver should be set so there is an overlap onto the cold side of the joint.

The Contractor shall not allow any butt joint to be incomplete at the end of a work shift unless otherwise allowed by the Engineer. When using this method, the Contractor is not allowed to leave a vertical edge exposed at the end of a work shift and must complete paving of the roadway full width "curb to curb."

Figure 4.06-2: Butt Joint (Not to Scale)

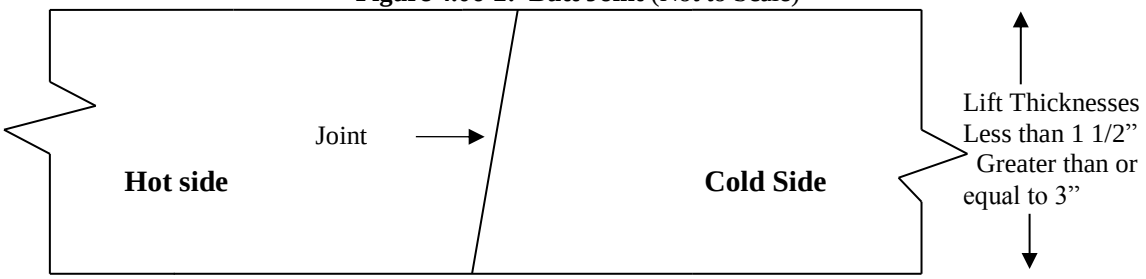

<u>Method III - Butt Joint with Hot Poured Rubberized Asphalt Treatment</u>:

If Method I cannot be used due to physical constraints in certain limited locations, the Contractor may submit a request in writing for approval by the Engineer to use Method III as a substitution in those locations. There shall be no additional measurement or payment made when Method III is substituted for Method I. When required by the Contract or approved by the Engineer, Method III (see Figure 4.06-3) shall be used.

Figure 4.06-3: Butt Joint with Hot Poured Rubberized Asphalt Treatment
(Not to Scale)

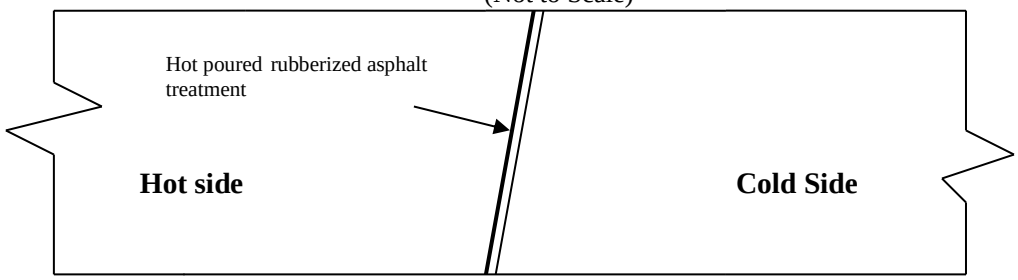

All of the requirements of Method II must be met with Method III. In addition, the longitudinal vertical edge must be treated with a rubberized joint seal material meeting the requirements of ASTM D6690, Type 2. The joint sealant shall be placed on the face of the "cold side" of the butt joint as shown above prior to placing the "hot side" of the butt joint. The joint seal material shall be applied in accordance with the manufacturer's recommendation so as to provide a uniform coverage and avoid excess bleeding onto the newly placed pavement.

8. Contractor Quality Control (QC) Requirements: The Contractor shall be responsible for maintaining adequate quality control procedures throughout the production and placement operations. Therefore, the Contractor must ensure that the materials, mixture, and work provided by Subcontractors, Suppliers, and Producers also meet Contract specification requirements.

This effort must be documented in Quality Control Plans (QCP) and must address the actions, inspection, or sampling and testing necessary to keep the production and placement operations in control, to determine when an operation has gone out of control and to respond to correct the situation in a timely fashion.

The Standard QCP for production shall consist of the quality control program specific to the production facility.

There are 3 components to the QCP for placement: a Standard QCP, a Project Summary Sheet that details Project-specific information, and, if applicable, a separate Extended Season Paving Plan as required in 4.06.03-9 "Temperature and Seasonal Requirements."

The Standard QCP for both production and placement shall be submitted to the Department for approval each calendar year and at a minimum of 30 days prior to production or placement.

Production or placement shall not occur until all QCP components have been approved by the Engineer.

Each QCP shall include the name and qualifications of a Quality Control Manager (QCM). The QCM shall be responsible for the administration of the QCP, and any modifications that may become necessary.

The QCM shall have the ability to direct all Contractor personnel on the Project during paving operations.

The QCPs shall also include the name and qualifications of any outside testing laboratory performing any

QC functions on behalf of the Contractor. The QC Technician performing in-place density testing shall be NETTCP certified as a paving inspector.

Approval of the QCP does not relieve the Contractor of its responsibility to comply with the Project specifications. The Contractor may modify the QCPs as work progresses and must document the changes in writing prior to resuming operations. These changes include but are not limited to changes in quality control procedures or personnel. The Department reserves the right to deny significant changes to the QCPs.

QCP for Production: Refer to M.04.03-1.

QCP for Placement: The Standard QCP, Project Summary Sheet, and Extended Season Paving Plan shall conform to the format provided by the Engineer. The format is available at http://www.ct.gov/dot/lib/dot/documents/dconstruction/pat/qcp_outline_hma_placement.pdf

The Contractor shall perform all quality control sampling and testing, provide inspection, and exercise management control to ensure that bituminous concrete placement conforms to the requirements as outlined in its QCP during all phases of the work. The Contractor shall document these activities for each day of placement.

The Contractor shall submit complete field density testing and inspection records to the Engineer within 48 hours in a manner acceptable to the Engineer.

The Contractor may obtain 1 mat core and 1 joint core per day for process control, provided this process is detailed in the QCP. The results of these process control cores shall not be used to dispute the Department's determinations from the acceptance cores. The Contractor shall submit the location of each process control core to the Engineer for approval prior to taking the core. The core holes shall be filled to the same requirements described in Subarticle 4.06.03-10.

9. Temperature and Seasonal Requirements: Paving, including placement of temporary pavements, shall be divided into 2 seasons, "In-Season" and "Extended-Season." In-Season paving occurs from May 1 to October 14, and Extended Season paving occurs from October 15 to April 30. The following requirements shall apply unless otherwise authorized or directed by the Engineer:

- Mixtures shall not be placed when the air or subbase temperature is less than 40°F regardless of the season.
- Should paving operations be scheduled during the Extended Season, the Contractor must submit an Extended Season Paving Plan for the Project that addresses minimum delivered mix temperature considering WMA, PMA, or other additives; maximum paver speed; enhanced rolling patterns; and the method to balance mixture delivery and placement operations. Paving during Extended Season shall not commence until the Engineer has approved the plan.

10. Field Density The Contractor shall obtain cores for the determination of mat and longitudinal joint density of bituminous concrete pavements. Within five calendar days of placement, mat and joint cores shall be extracted on each lift with a specified thickness of 1 1/2 inches or more. Joint cores shall not be extracted on HMA S1.0 lifts.

The Contractor shall extract cores from random locations determined by the Engineer in accordance with ASTM D3665. Four (4) or six (6) inch diameter cores shall be extracted for S0.25, S0.375 and S0.5 mixtures; 6 inch diameter cores shall be required for S1.0 mixtures. The Contractor shall coordinate with the Engineer to witness the extraction, labeling of cores, and filling of the core holes.

Each lift will be separated into lots as follows:

a. Simple Average Density Lots: For total estimated quantities below 2,000 tons, the lift will be evaluated in one lot which will include the total paved tonnage of the lift and all longitudinal joints between the curb lines.
   For total estimated quantities between 2,000 and 3,500 tons, the lift will be evaluated in two lots in which each lot will include approximately half of the total tonnage placed for the full paving width of a lift including all longitudinal joints between the curb lines.
b. PWL Density Lots: Mat density lots will include each 3,500 tons of mixture placed within 30 calendar days. Joint density lots will include 14,000 linear feet of constructed joints. Bridge density lots will always be analyzed using simple average lot methodology.
c. Partial Density Lot (For PWL only): A mat density lot with less than 3,500 tons or a joint density lot with less than 14,000 linear feet due to:
   - completion of the course; or
   - a lot spanning 30 calendar days.

Prior to paving, the type and number of lot(s) will be determined by the Engineer. Noncontiguous areas

such as highway ramps may be combined to create one lot.

After the lift has been compacted and cooled, the Contractor shall cut cores to a depth equal to or greater than the lift thickness and shall remove them without damaging the lift(s) to be tested. Any core that is damaged or obviously defective while being obtained will be replaced with a new core from a location within 2 feet measured in a longitudinal direction.

A mat core shall not be located any closer than 1 foot from the edge of a paver pass. If a random number locates a core less than 1 foot from any edge, the location will be adjusted by the Engineer so that the outer edge of the core is 1 foot from the edge of the paver pass.

Method I, Notched Wedge Joint cores shall be taken so that the center of the core is 5 inches from the visible joint on the hot mat side (Figure 4.06-4).

Figure 4.06-4: Notched Wedge Joint Cores (Not to Scale)

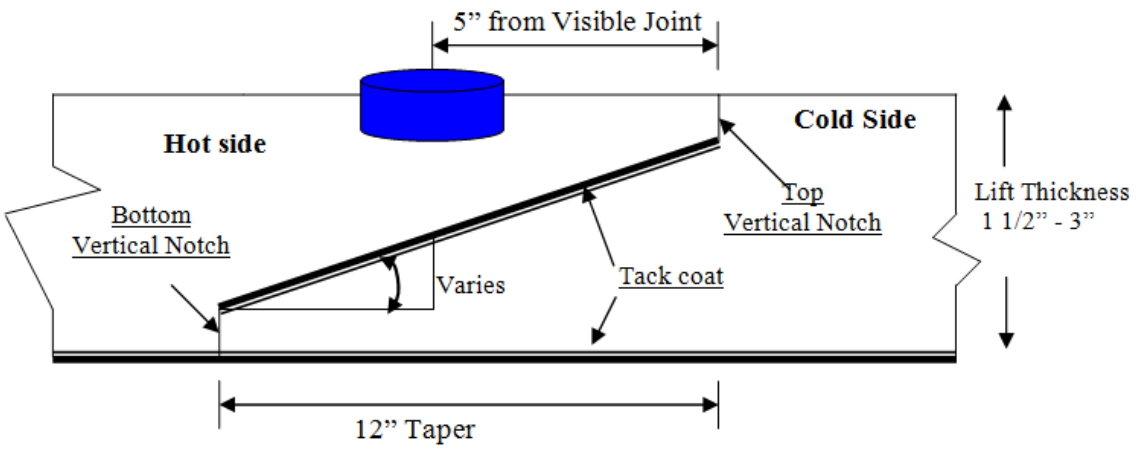

When Method II or Method III Butt Joint is used, cores shall be taken from the hot side so the edge of the core is within 1 inch of the longitudinal joint.

The cores shall be labeled by the Contractor with the Project number, date placed, lot number, and sub-lot number. The core's label shall include "M" for a mat core and "J" for a joint core. For example, a mat core from the first lot and the first sub-lot shall be labeled with "M1 – 1." A mat core from the second lot and first sub-lot shall be labeled "M2-1" (see Figure 4.06-5). The Engineer shall fill out a MAT-109 to accompany the cores. The Contractor shall deliver the cores and MAT-109 to the Department's Central Lab. The Contractor shall use a container approved by the Engineer. The container shall have a lid capable of being locked shut and tamper proof. The Contractor shall use foam, bubble wrap, or another suitable material to prevent the cores from being damaged during handling and transportation. Once the cores and MAT-109 are in the container the Engineer will secure the lid using security seals at the removable hinges(s) and at the lid opening(s). The security seals' identification number must be documented on the MAT-109. All sealed containers shall be delivered to the Department's Central Lab within two working days from time of extraction. Central Lab personnel will break the security seal and take possession of the cores.

Figure 4.06-5: Labeling of Cores

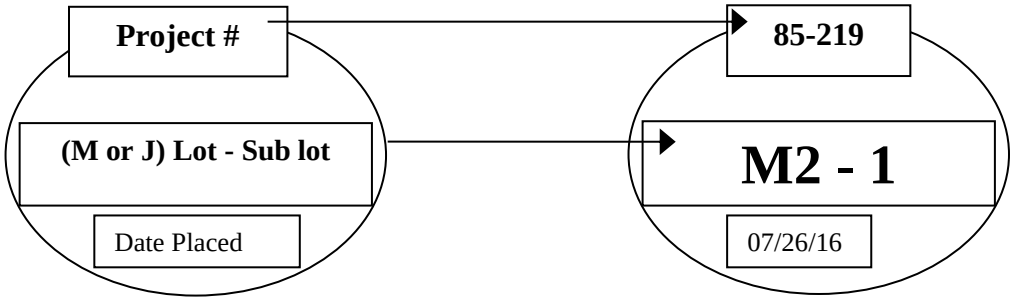

Each core hole shall be filled within 4 hours upon core extraction. Prior to being filled, the hole shall be prepared by removing any free water and applying tack coat using a brush or other means to uniformly cover the cut surface. The core hole shall be filled using a bituminous concrete mixture at a minimum temperature of 240°F containing the same or smaller nominal maximum aggregate size and compacted with a hand compactor or other mechanical means to the maximum compaction possible. The bituminous concrete shall be compacted to 1/8 inch above the finished pavement.

Simple Average Density Lots:

A standard simple average density lot is the quantity of material placed within the defined area excluding any bridge decks.

A combo simple average density lot is the quantity of material placed within the defined area including bridge decks less than or equal to 500 feet long.

A bridge simple average density lot is the quantity of material placed on a bridge deck longer than 500 feet.

The number of cores per lot shall be determined in accordance with Table 4.06-4. If a randomly selected mat or joint core location is on a bridge deck, the core is to be obtained on the bridge deck in addition to the core(s) required on the bridge deck.

The number of cores per lot shall be determined in accordance with Table 4.06-5. Multiple bridge decks can be combined into one lot if the paving and underlying conditions are comparable. If multiple bridge decks are combined into a single bridge lot, at least one mat and joint core shall be obtained on each bridge.

The longitudinal locations of mat cores within a standard, combo, or bridge lot containing multiple paving passes will be determined using the combined length of the paving passes within the lot.

TABLE 4.06-4: Number of Cores per Lot (Simple Average)

Lot Type	No. of Mat Cores		No. of Joint Cores	
Standard Lot < 500 Tons	3		3	
Standard Lot ≥ 500 Tons	4		4	
Combo Lot < 500 Tons	2 plus	1 per bridge (≤ 300')	2 plus	1 per bridge (≤ 300)
Combo Lot ≥ 500 Tons[1]	4 plus	2 per bridge (301' – 500')	4 plus	2 per bridge (301' – 500')

TABLE 4.06-5: Number of Core per Bridge Density Lot (Simple Average)

Length of Bridge(s) (Feet)	Minimum No. of Mat Cores	Minimum No. of Joint Cores
< 500	2	2
501 – 1,500	3	3
1,501 – 2,500	4	4
2,501 and greater	5	5

PWL Density Lots:

A PWL mat density lot is 3,500 tons of material placed within the defined area excluding any bridges. One mat core will be obtained per every 500 tons placed.

A PWL joint density lot is 14,000 linear feet of longitudinal joint excluding any joints on bridge decks. One joint core will be obtained per every 2,000 linear feet of joint.

Bridge density lots will always be analyzed as using the simple average lot methodology. The number of cores per lot shall be determined in accordance with Table 4.06-5. Multiple bridge decks can be combined into one lot if the paving and underlying conditions are comparable. If multiple bridge decks are combined into a single bridge lot, at least one mat and joint core shall be obtained on each bridge.

11. Acceptance Sampling and Testing: Sampling shall be performed in accordance with ASTM D3665 or a statistically-based procedure of stratified random sampling approved by the Engineer.

Plant Material Acceptance: The Contractor shall provide the required sampling and testing during all

phases of the work in accordance with M.04. The Department will verify the Contractor's acceptance test results. Should any test results exceed the specified tolerances in the Department's current QA Program for Materials, the Contractor's test results for a subject lot or sub lot may be replaced with the Department's results for the purpose of calculating adjustments. The verification procedure is included in the Department's current QA Program for Materials.

Density Acceptance: The Engineer will perform all acceptance testing in accordance with AASHTO T 331. The density of each core will be determined using the daily production's average maximum theoretical specific gravity (Gmm) established during the testing of the parent material at the Plant. When there was no testing of the parent material or any Gmm exceeds the specified tolerances in the Department's current QA Program for Materials, the Engineer will determine the maximum theoretical density value to be used for density calculations.

12. Density Dispute Resolution Process: The Contractor and Engineer will work in partnership to avoid potential conflicts and to resolve any differences that may arise during quality control or acceptance testing for density. Both parties will review their sampling and testing procedures and results and share their findings. If the Contractor disputes the Engineer's test results, the Contractor must submit in writing a request to initiate the Dispute Resolution Process within five calendar days of the notification of the test results. No request for dispute resolution will be allowed unless the Contractor provides quality control results from samples taken prior to and after finish rolling, and within the timeframe described in 4.06.03-8 supporting its position. No request for dispute resolution will be allowed for a density lot in which any core was not taken within the required 5 calendar days of placement. Should the dispute not be resolved through evaluation of existing testing data or procedures, the Engineer may authorize the Contractor to obtain a new core or set of core samples per disputed lot. The core samples must be extracted no later than seven calendar days from the date of the Engineer's authorization. All such core samples shall be extracted and the core hole filled using the procedure outlined in 4.06.03-10.

a) Simple Average Lots: The Contractor may only dispute any simple average lot that is adjusted at or below 95 percent payment. The number and location (mat, joint, or structure) of the cores taken for dispute resolution must reflect the number and location of the original cores. The location of each core shall be randomly located within the respective original sub lot. The dispute resolution results shall be combined with the original results and averaged for determining the final in-place density value.

b) PWL Lots: The Contractor may dispute any PWL sublot when the PWL falls below 50% calculated in accordance with section 4.06.04.2.b. An additional random core in the sublot may be taken to validate the accuracy of the core in question. The Department will verify the additional core test result and may average the original test result with the additional core result for purpose of calculating adjustments.

13. Corrective Work Procedure:

If pavement placed by the Contractor does not meet the specifications, and the Engineer requires its replacement or correction, the Contractor shall:

a) Propose a corrective procedure to the Engineer for review and approval prior to any corrective work commencing. The proposal shall include:
   - Limits of pavement to be replaced or corrected, indicating stationing or other landmarks that are readily distinguishable.
   - Proposed work schedule.
   - Construction method and sequence of operations.
   - Methods of maintenance and protection of traffic.
   - Material sources.
   - Names and telephone numbers of supervising personnel.

b) Any corrective courses placed as the final wearing surface shall match the specified lift thickness after completion.

14. Protection of the Work: The Contractor shall protect all sections of the newly finished pavement from damage that may occur as a result of the Contractor's operations for the duration of the Project.

15. Cut Bituminous Concrete Pavement: Work under this item shall consist of making a straight-line cut in the bituminous concrete pavement to the lines delineated on the plans or as directed by the Engineer. The cut shall provide a straight, clean, vertical face with no cracking, tearing or breakage along the cut edge.

4.06.04—Method of Measurement:

1. HMA S* or PMA S*: Bituminous concrete will be measured for payment as the amount of material in tons placed as determined by the net weight on the delivered tickets and adjusted by area, thickness and weight as follows:

Quantity Adjustments**:** Adjustments may be applied to the placed bituminous concrete quantities that will be measured for payment using the following formulas:

Yield Factor for Adjustment Calculation = 0.0575 tons/SY/inch

Actual Area (SY) = [(Measured Length (ft)) x (Avg. of width measurements (ft))]÷9 s.f./SY

Actual Thickness (t) = Total tons delivered / [Actual Area (SY) x 0.0575 tons/SY/inch]

a) Area: If the average width exceeds the allowable tolerance, an adjustment will be made using the following formula. The tolerance for width is equal to the specified thickness (inch) of the lift being placed.

Quantity Adjusted for Area (T_A) = [(L x W_{adj})/9] x (t) x 0.0575 Tons/SY/inch = (-) tons

Where: L = Length (ft)
(t) = Actual thickness (inches)
W_{adj} = (Designed width (ft) + tolerance /12) - Measured Width)

b) Thickness: If the actual average thickness is less than the allowable tolerance, the Contractor shall submit a repair procedure to the Engineer for approval. If the actual thickness exceeds the allowable tolerance, an adjustment will be made using the following formula:

Quantity Adjusted for Thickness (T_T) = A x t_{adj} x 0.0575 = (-) tons

Where: A = Area = {[L x (Design width + tolerance (lift thickness)/12)] / 9}
t_{adj} = Adjusted thickness = [(Dt + tolerance) - Actual thickness]
Dt = Designed thickness (inches)

c) Weight: If the quantity of bituminous concrete representing the mixture delivered to the Project is in excess of the allowable gross vehicle weight (GVW) for each vehicle, an adjustment will be made using the following formula:

Quantity Adjusted for Weight (T_W) = GVW – DGW= (-) tons

Where: DGW = Delivered gross weight as shown on the delivery ticket or measured on a certified scale

2. Bituminous Concrete Adjustment Cost:

a) Production Lot Adjustment: An adjustment may be applied to each production lot as follows:

i. Non-PWL Production Lot (less than 3,500 tons):
The adjustment values in Tables 4.06-6 and 4.06-7 will be calculated for each sub lot based on the Air Void (AV) and Asphalt Binder Content (PB) test results for that sub lot. The total adjustment for each day's production (lot) will be computed as follows:

Tons Adjusted for Superpave Design (T_{SD}) = [($AdjAV_t$ + $AdjPB_t$) / 100] x Tons

Where: $AdjAV_t$: Percent adjustment for air voids
$AdjPB_t$: Percent adjustment for asphalt binder
Tons: Weight of material (tons) in the lot adjusted by 4.06.4-1

Percent Adjustment for Air Voids = $AdjAV_t$ = [$AdjAV_1$ + $AdjAV_2$ + $AdjAV_i$ + … + $AdjAV_n$)] /n

Where: $AdjAV_t$ = Total percent air void adjustment value for the lot
$AdjAV_i$ = Adjustment value from Table 4.06-6 resulting from each sub lot or the average of the

adjustment values resulting from multiple tests within a sub lot, as approved by the Engineer.
n = number of sub lots based on Table M.04.03-2

TABLE 4.06-6: Adjustment Values for Air Voids

Adjustment Value ($AdjAV_i$) (%)	S0.25, S0.375, S0.5, S1 Air Voids (AV)
+2.5	3.8 - 4.2
+3.125*(AV-3)	3.0 - 3.7
-3.125*(AV-5)	4.3 – 5.0
20*(AV-3)	2.3 – 2.9
-20*(AV-5)	5.1 – 5.7
-20.0	≤ 2.2 or ≥ 5.8

Percent Adjustment for Asphalt Binder = $AdjPB_t = [(AdjPB_1 + AdjPB_2 + AdjPB_i + \ldots + AdjPB_n)] /n$

Where: $AdjPB_t$= Total percent liquid binder adjustment value for the lot
$AdjPB_i$ = Adjustment value from Table 4.06-7 resulting from each sub lot
n = number of binder tests in a production lot

TABLE 4.06-7: Adjustment Values for Binder Content

Adjustment Value ($AdjAV_i$) (%)	S0.25, S0.375, S0.5, S1 Pb
0.0	JMF Pb ± 0.3
- 10.0	≤ JMF Pb - 0.4 or ≥ JMF Pb + 0.4

ii. PWL Production Lot (3500 tons or more):
For each lot, the adjustment values will be calculated using PWL methodology based on AV, VMA, and PB test results. The results will be considered as being normally distributed and all applicable equations in AASHTO R 9 and AASHTO R 42 Appendix X4 will apply.
Only one test result will be considered for each sub lot. The specification limits are listed in M.04.
For AV, PB, and voids in mineral aggregate (VMA), the individual material quantity characteristic adjustment (Adj) will be calculated as follows:
For PWL between 50 and 90%: $Adj(AV_t \text{ or } PB_t \text{ or } VMA_t)= (55 + 0.5\ PWL) - 100$
For PWL at and above 90%: $Adj(AV_t \text{ or } PB_t \text{ or } VMA_t)= (77.5 + 0.25\ PWL) - 100$
Where: $AdjAV_t$ = Total percent AV adjustment value for the lot
$AdjPB_t$= Total percent PB adjustment value for the lot
$AdjVMA_t$= Total percent VMA adjustment value for the lot
A lot with PWL less than 50% in any of the 3 individual material quality characteristics will be evaluated under 1.06.04.
The total adjustment for each production lot will be computed using the following formula:

Tons Adjusted for Superpave Design (T_{SD}) = $[(0.5AdjAV_t + 0.25AdjPB_t + 0.25\ AdjVMA_t) / 100]$ X Tons

Where Tons: Weight of material (tons) in the lot adjusted by 4.06.4-1

iii. Partial Lots:
Lots with less than 4 sub lots will be combined with the prior lot. If there is no prior lot with equivalent material or if the last test result of the prior lot is over 30 calendar days old, the adjustment will be calculated as indicated in 4.06.04-2.a)i.
Lots with 4 or more sub lots will be calculated as indicated in 4.06.04-2.a)ii.

Production Lot Adjustment: T_{SD} x Unit Price = Est. (Pi)

Where: Unit Price = Contract unit price per ton per type of mixture
Est. (Pi)= Pay Unit in dollars representing incentive or disincentive per lot

b) Density Lot Adjustment: An adjustment may be applied to each density lot as follows:

i. Simple Average Density Lot (less than 3500 tons) and Bridge Lots:
The final lot quantity shall be the difference between the total payable tons for the Project and the sum of the previous lots. If either the Mat or Joint adjustment value is "remove and replace," the density lot shall be removed and replaced (curb to curb).
No positive adjustment will be applied to a density lot in which any core was not taken within the required 5 calendar days of placement.
Tons Adjusted for Density (T_D) = [{(PA_M x 0.50) + (PA_J x 0.50)} / 100] X Tons
Where: T_D = Total tons adjusted for density for each lot
PA_M = Mat density percent adjustment from Table 4.06-8
PA_J = Joint density percent adjustment from Table 4.06-9
Tons: Weight of material (tons) in the lot adjusted by 4.06.4-1

TABLE 4.06-8: Adjustment Values for Pavement Mat density

Average Core Result Percent Mat Density	Percent Adjustment (Bridge and Non-Bridge) (1)(2)
97.1 - 100	-1.667*(ACRPD-98.5)
94.5 – 97.0	+2.5
93.5 – 94.4	+2.5*(ACRPD-93.5)
92.0 – 93.4	0
90.0 – 91.9	-5*(92-ACRPD)
88.0 – 89.9	-10*(91-ACRPD)
87.0 – 87.9	-30
86.9 or less	Remove and Replace (curb to curb)

Notes:
(1) ACRPD = Average Core Result Percent Density
(2) All Percent Adjustments to be rounded to the second decimal place; for example round 1.667 to 1.67.

TABLE 4.06-9: Adjustment Values for Pavement Joint Density

Average Core Result Percent Joint Density	Percent Adjustment (Bridge and Non-Bridge) (1)(2)
97.1 – 100	-1.667*(ACRPD-98.5)
93.5 – 97.0	+2.5
92.0 – 93.4	+1.667*(ACRPD-92)
91.0 – 91.9	0
89.0 – 90.9	-7.5*(91-ACRPD)
88.0 – 88.9	-15*(90-ACRPD)
87.0 – 87.9	-30
86.9 or less	Remove and Replace (curb to curb)

Notes:
(1) ACRPD = Average Core Result Percent Density
(2) All Percent Adjustments to be rounded to the second decimal place; for example round 1.667 to 1.67

Additionally, any sublot with a density result below 87% will be evaluated under 1.06.04.

ii. PWL Density Lot (3,500 tons or more):

For each lot, the adjustment values will be calculated using PWL methodology based on mat and joint density test results. Only one result will be included for each sublot. The results will be considered as being normally distributed and all applicable equations in AASHTO R 9 and AASHTO R 42 Appendix X4 will apply.

The specification limits for the PWL determination are as follows:

Mat Density: 91.5-98%
Joint Density: 90-98%

For mat and joint density, the individual percent adjustment (PA) will be calculated as follows:

For PWL between 50 and 90%: PA ($_M$ or $_J$)= 0.25 * PWL – 22.50

For PWL at and above 90%: PA ($_M$ or $_J$)= 0.125 * PWL – 11.25

Where: PA_M = Total percent mat density adjustment value for the PWL mat density lot
PA_J= Total percent joint density adjustment value for the PWL joint density lot

No positive adjustment will be applied to a density lot in which any core was not taken within the required 5 calendar days of placement.

A lot with PWL less than 50% will be evaluated under 1.06.04.

The total adjustment for each PWL mat density lot will be computed as follows:

Tons Adjusted for Mat Density (T_{MD}) = (PA_M / 100) X Tons

Where: Tons= Weight of material (tons) in the lot adjusted by 4.06.4-1.

The total adjustment for each PWL joint density lot will be computed as follows:

Tons Adjusted for Joint Density (T_{JD}) = (PA_J / 100) X J_Tons

Tons Adjusted for Joint Density will be calculated at the end of each project or project phase.

Where: $\text{J_Tons} = \text{Tons in project or phase adjusted by } 4.06.4 - 1 \text{ x } \frac{\text{Lot joint length}}{\text{Joint length in project or phase}}$

All bridge density lot adjustments will be evaluated in accordance with 4.06.04-2.b)i.

Additionally, any sublot with a density result below 87% will be evaluated under 1.06.04.

iii. Partial Lots:

Lots with less than 4 sub lots will be combined with the prior lot. If there is no prior lot with equivalent material and placement conditions or if the last test result of the prior lot is over 30 calendar days old, the mat and joint individual adjustments will be calculated in accordance to Tables 4.06-8 and 4.06-9. T_{MD} and T_{JD} will be calculated as indicated in 4.06.04-2.b)i.

Lots with 4 or more sub lots will be calculated as indicated in 4.06.04-2.b)ii.

Density Lot Adjustment (Simple Average Lots): T_D x Unit Price = Est. (Di)
Density Lot Adjustment (PWL Lots): (T_{MD} or T_{JD}) x Unit Price = Est. (DMi or DJi)

Where: Unit Price = Contract unit price per ton per type of mixture
Est. (Di)= Pay Unit in dollars representing incentive or disincentive per simple average density lot
Est. (DMi)= Pay Unit in dollars representing incentive or disincentive per PWL mat lot
Est. (DJi)= Pay Unit in dollars representing incentive or disincentive per PWL joint lot

Additionally, any sublot with a density result below 87% will be evaluated under 1.06.04.

3. Transitions for Roadway Surface: The installation of permanent transitions will be measured under the appropriate item used in the formation of the transition.

The quantity of material used for the installation of temporary transitions will be measured for payment

under the appropriate item used in the formation of the transition. The installation and removal of a bond breaker and the removal and disposal of any temporary transition formed by milling or with bituminous concrete pavement is not measured for payment.

4. Cut Bituminous Concrete Pavement: The quantity of bituminous concrete pavement cut will be measured in accordance with 2.02.04.

5. Material for Tack Coat: The quantity of tack coat will be measured for payment by the number of gallons furnished and applied on the Project and approved by the Engineer. No tack coat material shall be included that is placed in excess of the tolerance described in 4.06.03.

a. Container Method – Material furnished in a container will be measured to the nearest 1/2 gallon. The volume will be determined by either measuring the volume in the original container by a method approved by the Engineer or using a separate graduated container capable of measuring the volume to the nearest 1/2 gallon. The container in which the material is furnished must include the description of material, including lot number or batch number and manufacturer or product source.

b. Vehicle Method

i. Measured by Weight: The number of gallons furnished will be determined by weighing the material on calibrated scales furnished by the Contractor. To convert weight to gallons, one of the following formulas will be used:

Tack Coat (gallons at 60°F) = Measured Weight (pounds) / Weight per gallon at 60°F

Tack Coat (gallons at 60°F) = 0.996 x Measured Weight (pounds) / Weight per gallon at 77°F

ii. Measured by automated metering system on the delivery vehicle:

Tack Coat (gallons at 60°F) = 0.976 x Measured Volume (gallons).

6. Material Transfer Vehicle (MTV): The furnishing and use of a MTV will be measured separately for payment based on the actual number of surface course tons delivered to a paver using the MTV.

4.06.05—Basis of Payment:

1. HMA S* or PMA S*: The furnishing and placing of bituminous concrete will be paid for at the Contract unit price per ton for " HMA S*" or " PMA S*."

All costs associated with providing illumination of the work area are included in the general cost of the work.

All costs associated with cleaning the surface to be paved, including mechanical sweeping, are included in the general cost of the work. All costs associated with constructing longitudinal joints are included in the general cost of the work.

All costs associated with obtaining cores for acceptance testing and dispute resolution are included in the general cost of the work.

2. Bituminous Concrete Adjustment Costs: This adjustment will be calculated using the formulas shown below if all of the measured adjustments in 4.06.04-2 are not equal to zero. A positive or negative adjustment will be applied to monies due the Contractor.

Production Lot: Σ Est (Pi) = Est. (P)
Density Lot (Simple Average Lots): Σ Est (Di) = Est. (D)
Density Lot (PWL): Σ Est (DMi) + Σ (DJi) = Est. (D)
Bituminous Concrete Adjustment Cost= Est. (P) + Est. (D)

Where: Est. ( )= Pay Unit in dollars representing incentive or disincentive in each production or density lot calculated in 4.06.04-2

The Bituminous Concrete Adjustment Cost item, if included in the bid proposal or estimate, is not to be altered in any manner by the Bidder. If the Bidder should alter the amount shown, the altered figure will be disregarded and the original estimated cost will be used for the Contract.

3. Transitions for Roadway Surface: The installation of permanent transitions will be paid under the appropriate item used in the formation of the transition. The quantity of material used for the installation of temporary transitions will be paid under the appropriate pay item used in the formation of the transition. The installation and removal of a bond breaker, and the removal and disposal of any temporary transition formed by milling or with bituminous concrete pavement is included in the general cost of the work.

4. The cutting of bituminous concrete pavement will be paid in accordance with 2.02.05.

5. Material for tack coat will be paid for at the Contract unit price per gallon at 60°F for "Material for

Tack Coat."

6. The Material Transfer Vehicle (MTV) will be paid at the Contract unit price per ton for "Material Transfer Vehicle."

Pay Item	Pay Unit
HMA S*	ton
PMA S*	ton
Bituminous Concrete Adjustment Cost	est.
Material for Tack Coat	gal.
Material Transfer Vehicle	ton

Rev. 7-18-16

ITEM #0406999A - ASPHALT ADJUSTMENT COST

Description: The Asphalt Adjustment Cost will be based on the variance in price for the performance-graded binder component of hot mix asphalt (HMA), Polymer Modified Asphalt (PMA), and Ultra-Thin Bonded Hot-Mix Asphalt mixtures completed and accepted during the Contract.

The Asphalt Price is available on the Department of Transportation website at:

http://www.ct.gov/dot/asphaltadjustment

Construction Methods:

An asphalt adjustment will be applied only if all of the following conditions are met:

I. For HMA and PMA mixtures:
   a. The HMA or PMA mixture for which the adjustment would be applied is listed as a Contract item with a pay unit of tons.
   b. ***The total quantity for all HMA and PMA mixtures in the Contract or individual purchase order (Department of Administrative Service contract awards) exceeds 1000 tons or the Project duration is greater than 6 months.***
   c. The difference between the posted *Asphalt Base Price* and *Asphalt Period Price* varies by more than $5.00 per ton.

II. For Ultra-Thin Bonded HMA mixtures:
   a. The Ultra-Thin Bonded HMA mixture for which the adjustment would be applied is listed as a Contract item.
   b. The total quantity for Ultra-Thin Bonded HMA mixture in the Contract exceeds:
      i. 800 tons if the Ultra-Thin Bonded HMA item has a pay unit of tons.
      ii. 30,000 square yards if the Ultra-Thin Bonded HMA item has a pay unit of square yards.

      Note: The quantity of Ultra-Thin Bonded HMA measured in tons shall be determined from the material documentation requirements set forth in the Ultra-Thin Bonded HMA item Special Provision.
   c. The difference between the posted *Asphalt Base Price* and *Asphalt Period Price* varies by more than $5.00 per ton.
   d. No Asphalt Adjustment Cost will be applied to the liquid emulsion that is specified as part of the Ultra-Thin Bonded HMA mixture system.

III. Regardless of the binder used in all HMA or PMA mixtures, the Asphalt Adjustment Cost will be based on PG 64-22.

The Connecticut Department of Transportation (CTDOT) will post on its website, the average per ton selling price (asphalt price) of the performance-graded binder. The average is based on the high and low selling price published in the most recent available issue of the **Asphalt Weekly Monitor®** furnished by Poten & Partners, Inc. under the "East Coast Market – New England, New Haven, Connecticut area," F.O.B. manufacturer's terminal.

Rev. 7-18-16

The selling price furnished from the Asphalt Weekly Monitor ® is based on United States dollars per standard ton (US$/ST).

Method of Measurement:

Formula: **HMA x [PG%/100] x [(*Period Price - Base Price*)] = $ ____**

where

- **HMA:**
  1. For HMA, PMA, and Ultra-Thin Bonded HMA mixtures with pay units of tons: The quantity in tons of accepted HMA, PMA, or Ultra-Thin Bonded HMA mixture measured and accepted for payment.
  2. For Ultra-Thin Bonded HMA mixtures with pay units of square yards: The quantity of Ultra-Thin Bonded HMA mixture delivered, placed, and accepted for payment, calculated in tons as documented according to the Material Documentation provision (Construction Methods, paragraph G) of the Ultra-Thin Bonded HMA Special Provision.
- ***Asphalt Base Price***: The asphalt price posted on the CTDOT website 28 days before the actual bid opening posted.
- ***Asphalt Period Price***: The asphalt price posted on the CTDOT website during the period the HMA or PMA mixture was placed.
- **PG%:** Performance-Graded Binder percentage
  1. For HMA or PMA mixes:
     - PG% = 4.5 for HMA S1 and PMA S1
     - PG% = 5.0 for HMA S0.5 and PMA S0.5
     - PG% = 6.0 for HMA S0.375, PMA S0.375, HMA S0.25 and PMA S0.25
  2. For Ultra-Thin Bonded HMA mixes:
     PG% = Design % PGB (Performance Graded Binder) in the approved job mix formula, expressed as a percentage to the tenth place (e.g. 5.1%)

The asphalt adjustment cost shall not be considered as a changed condition in the Contract as result of this provision since all bidders are notified before submission of bids.

Basis of Payment: The "Asphalt Adjustment Cost" will be calculated using the formula indicated above. A payment will be made for an increase in costs. A deduction from monies due the Contractor will be made for a decrease in costs.

The sum of money shown on the Estimate and in the itemized proposal as "Estimated Cost" for this item will be considered the bid price although the adjustment will be made as described above. The estimated cost figure is not to be altered in any manner by the bidder. If the bidder should alter the amount shown, the altered figure will be disregarded and the original cost figure will be used to determine the amount of the bid for the Contract.

Pay Item	Pay Unit
Asphalt Adjustment Cost	est.

STATE OF CONNECTICUT
Regulation of Environmental Protection
Section 22a-174-20 of the Regulations of Connecticut

(k) Restrictions on VOC emissions from cutback and emulsified asphalt.

(1) Definitions. For the purposes of this subsection:

(A) "Asphalt" means a dark brown or black solid, liquid or semisolid cementitious material composed primarily of bitumens that occur in nature or are obtained as residue in refining petroleum.

(B) “Cutback asphalt” means asphalt that has been liquefied by blending with a diluent of petroleum solvents or any other diluent that contains VOC.

(C) “Emulsified asphalt” means an emulsion of asphalt and water that contains a small amount of an emulsifying agent; it is a heterogeneous system containing two normally immiscible phases (asphalt and water) in which the water forms the continuous phase of the emulsion, and minute globules of asphalt form the discontinuous phase.

(2) Applicability.

This subsection shall apply to any person who, on or after May 1, 2009, stores, uses, solicits the use of, or applies asphalt for road paving, road maintenance or road repair.

(3) Standards.

(A) Except with prior written approval of the Commissioner and the Administrator as provided in subdivision (4) of this subsection, during the period from May 1 through September 30 of any calendar year, no person shall use or apply:

(i) Cutback asphalt; or

(ii) Emulsified asphalt, unless:

(I) The asphalt, as applied, was formulated to contain not greater than 0.1% VOC by weight, or

(II) The asphalt, as applied, produces not greater than 6.0 milliliter of oil distillate by distillation as tested by ASTM Method D 244 or AASHTO Method T 59.

(B) Any person who stores asphalt during the period of time from October 1 through April 30, may continue to store such asphalt during May 1 through September 30.

STATE OF CONNECTICUT
Regulation of Environmental Protection
Section 22a-174-20 of the Regulations of Connecticut

(4) Exceptions.

(A) The use or application of cutback asphalt or emulsified asphalt that does not comply with subdivision (3) of this subsection may be allowed upon obtaining approval from the Commissioner and the Administrator.

(B) Any request for an approval under this subdivision shall be made in writing to the Commissioner and the Administrator and shall include, at a minimum, the following information:

(i) The scope of the activity,

(ii) An assessment of alternative materials and procedures,

(iii) Quantification of the amount of VOC that would be emitted as a result of such activity,

(iv) The dates during which the activity will occur, and

(v) A demonstration that it is necessary for the activity to occur during the period commencing on May 1 and ending after September 30.

(5) Recordkeeping.

(A) Any person subject to this subsection shall:

(i) Maintain records of test, formulation, and usage data, and any other information necessary for the Commissioner to determine compliance with the requirements of this subsection,

(ii) Maintain all records required pursuant to this subsection in a readily accessible location in Connecticut for a minimum of five (5) years, and

(iii) Provide records made pursuant to this subsection to the Commissioner not later than thirty (30) days after a request to provide such records.

(B) Any person who has obtained approval for a non-complying use pursuant to subdivision (4) of this subsection shall maintain copies of the request, all supporting materials and the written approval of the Commissioner.

SECTION M.04
BITUMINOUS CONCRETE MATERIALS

M.04.01—Bituminous Concrete Materials and Facilities
M.04.02—Mix Design and Job Mix Formula (JMF)
M.04.03—Production Requirements

M.04.01—Bituminous Concrete Materials and Facilities: Each source of material, Plant, and laboratory used to produce and test bituminous concrete must be qualified on an annual basis by the Engineer. AASHTO or ASTM Standards noted with an (M) have been modified and are detailed in Table M.04.03-5.

Aggregates from multiple sources of supply must not be blended or stored in the same stockpile.

1. **Coarse Aggregate:** All coarse aggregate shall meet the requirements listed in M.01.
2. **Fine Aggregate:** All fine aggregate shall meet the requirements listed in M.01.
3. **Mineral Filler:** Mineral filler shall conform to the requirements of AASHTO M 17.
4. **Performance Graded (PG) Asphalt Binder:**

(a) General:

i. PG asphalt binder shall be uniformly mixed and blended and be free of contaminants such as fuel oils and other solvents. Binder shall be properly heated and stored to prevent damage or separation.

ii. The binder shall meet the requirements of AASHTO M 332 and shall be graded or verified in accordance with AASHTO R 29. The Contractor shall submit a Certified Test Report and bill of lading representing each delivery in accordance with AASHTO R 26(M). The Certified Test Report must also indicate the binder specific gravity at 77°F; rotational viscosity at 275°F and 329°F; and the mixing and compaction viscosity-temperature chart for each shipment.

iii. The Contractor shall submit the name(s) of personnel responsible for receipt, inspection, and record keeping of PG binder. Contractor Plant personnel shall document specific storage tank(s) where binder will be transferred and stored until used and provide binder samples to the Engineer upon request. The person(s) shall assure that each shipment is accompanied by a statement certifying that the transport vehicle was inspected before loading was found acceptable for the material shipped and that the binder is free of contamination from any residual material, along with 2 copies of the bill of lading.

iv. The blending or combining of PG binders in 1 storage tank at the Plant from different suppliers, grades, or additive percentages is prohibited.

(b) Basis of Approval: The request for approval of the source of supply shall list the location where the material will be manufactured, and the handling and storage methods, along with necessary certification in accordance with AASHTO R 26(M). Only suppliers/refineries that have an approved "Quality Control Plan for Performance Graded Binders" formatted in accordance with AASHTO R 26(M) may supply PG binders to Department projects.

(c) Standard Performance Grade (PG) Binder:

i. Standard PG binder shall be defined as "Neat." Neat PG binders shall be free from modification with: fillers, extenders, reinforcing agents, adhesion promoters, thermoplastic polymers, acid modification and other additives such as re-refined motor oil, and shall indicate such information on each bill of lading and Certified Test Report.

ii. The standard asphalt binder shall be PG 64S-22.

(d) Modified Performance Grade (PG) Binder: The modified asphalt binder shall be Performance Grade PG 64E-22 asphalt modified solely with a Styrene-Butadiene-Styrene (SBS) polymer. The polymer modifier shall be added at either the refinery or terminal and delivered to the bituminous concrete production facility as homogenous blend. The stability of the modified binder shall be verified in accordance with ASTM D7173 using the Dynamic Shear Rheometer (DSR). The DSR $G^*/\sin(\delta)$ results from the top and bottom sections of the ASTM D7173 test shall not differ by more than 10%. The results of ASTM D7173 shall be included on the Certified Test Report. The binder shall meet the requirements of AASHTO M 332 (including Appendix X1) and AASHTO R 29.

(e) Warm Mix Additive or Technology:

i. The warm mix additive or technology must be listed on the North East Asphalt User Producer Group (NEAUPG) Qualified Warm Mix Asphalt (WMA) Technologies List at the time of bid, which may be accessed online at http://www.neaupg.uconn.edu.

ii. The warm mix additive shall be blended with the asphalt binder in accordance with the manufacturer's recommendations.

iii. The blended binder shall meet the requirements of AASHTO M 332 and shall be graded or verified in accordance with AASHTO R 29 for the specified binder grade. The Contractor shall submit a Certified Test Report showing the results of the testing demonstrating the binder grade.

In addition, it must include the grade of the virgin binder, the brand name of the warm mix additive, the manufacturer's suggested rate for the WMA additive, the water injection rate (when applicable), and the WMA Technology manufacturer's recommended mixing and compaction temperature ranges.

5. Emulsified Asphalts:

(a) General:

i. The emulsified asphalt shall meet the requirements of AASHTO M 140(M) or AASHTO M 208 as applicable.

ii. The emulsified asphalts shall be free of contaminants such as fuel oils and other solvents.

iii. The blending at mixing Plants of emulsified asphalts from different suppliers is prohibited.

(b) Basis of Approval:

i. The request for approval of the source of supply shall list the location where the material is manufactured, the handling and storage methods, and certifications in accordance with AASHTO R 77. Only suppliers that have an approved "Quality Control Plan for Emulsified Asphalt" formatted in accordance with AASHTO R 77 and that submit monthly split samples per grade to the Engineer may supply emulsified asphalt to Department projects.

ii. Each shipment of emulsified asphalt delivered to the Project site shall be accompanied with the corresponding Certified Test Report listing Saybolt viscosity, residue by evaporation, penetration of residue, and weight per gallon at 77°F and Material Certificate.

iii. Anionic emulsified asphalts shall meet the requirements of AASHTO M-140. Materials used for tack coat shall not be diluted and meet grade RS-1 or RS-1h. When ambient temperatures are 80°F and rising, grade SS-1 or SS-1h may be substituted if permitted by the Engineer.

iv. Cationic emulsified asphalt shall meet the requirements of AASHTO M-208. Materials used for tack coat shall not be diluted and meet grade CRS-1. The settlement and demulsibility test will not be performed unless deemed necessary by the Engineer. When ambient temperatures are 80°F and rising, grade CSS-1 or CSS-1h may be substituted if permitted by the Engineer.

6. Reclaimed Asphalt Pavement (RAP):

(a) General: RAP is a material obtained from the cold milling or removal and processing of bituminous concrete pavement. RAP material shall be crushed to 100% passing the 1/2 inch sieve and free from contaminants such as joint compound, wood, plastic, and metals.

(b**)** Basis of Approval: The RAP material will be accepted on the basis of one of the following criteria:

i. When the source of all RAP material is from pavements previously constructed on Department projects, the Contractor shall provide a Materials Certificate listing the detailed locations and lengths of those pavements and that the RAP is only from those locations listed.

ii. When the RAP material source or quality is not known, the Contractor shall request approval from the Engineer at least 30 calendar days prior to the start of the paving operation. The request shall include a Material Certificate and applicable test results stating that the RAP consists of aggregates that meet the specification requirements of M.04.01-1 through M.04.01-3 and that the binder in the RAP is substantially free of solvents, tars and other contaminants. The Contractor is prohibited from using unapproved material on Department projects and shall take necessary action to prevent contamination of approved RAP stockpiles. Stockpiles of unapproved material shall remain separate from all other RAP materials at all times. The request for approval shall include the following:

1. A 50-lb. sample of the RAP to be incorporated into the recycled mixture.
2. A 25-lb. sample of the extracted aggregate from the RAP.

7. Crushed Recycled Container Glass (CRCG):

(a) Requirements: The Contractor may propose to use clean and environmentally-acceptable CRCG in an amount not greater than 5% by weight of total aggregate.

(b) Basis of Approval: The Contractor shall submit to the Engineer a request to use CRCG. The request shall state that the CRCG contains no more than 1% by weight of contaminants such as paper, plastic, and metal and conforms to the following gradation:

CRCG Grading Requirements	
Sieve Size	Percent Passing
3/8 inch	100
No. 4	35-100
No. 200	0.0-10.0

The Contractor shall submit a Material Certificate to the Engineer stating that the CRCG complies with all the applicable requirements in this Section.

8. Joint Seal Material: Joint seal material must meet the requirements of ASTM D6690 - Type 2. The

Contractor shall submit a Material Certificate in accordance with 1.06.07 certifying that the joint seal material meets the requirements of this Section.

9. Recycled Asphalt Shingles (RAS): RAS shall consist of processed asphalt roofing shingles from post-consumer asphalt shingles or from manufactured shingle waste. The RAS material under consideration for use in bituminous concrete mixtures must be certified as being asbestos-free and shall be entirely free of whole, intact nails. The RAS material shall meet the requirements of AASHTO MP 23.

The Producer shall test the RAS material to determine the asphalt content and the gradation of the RAS material. The Producer shall take necessary action to prevent contamination of RAS stockpiles.

The Contractor shall submit a Material Certificate to the Engineer stating that the RAS complies with all the applicable requirements in this Section.

10. Plant Requirements:

(a) General: The Plant producing bituminous concrete shall comply with AASHTO M 156.

(b) Storage Silos: The Contractor may use silos for short-term storage with the approval of the Engineer. A storage silo must have heated cones and an unheated silo cylinder if it does not contain a separate internal heating system. When multiple silos are filled, the Contractor shall discharge 1 silo at a time. Simultaneous discharge of multiple silos for the same Project is not permitted.

Type of silo cylinder	Maximum storage time for all classes (hr)	
	HMA	WMA/PMA
Open Surge	4	Mfg Recommendations*
Unheated - Non-insulated	8	Mfg Recommendations*
Unheated - Insulated	18	Mfg Recommendations*
Heated - No inert gas	TBD by the Engineer	TBD by the Engineer

*Not to exceed HMA limits

(c) Documentation System: The mixing Plant documentation system shall include equipment for accurately proportioning the components of the mixture by weight and in the proper order, controlling the cycle sequence, and timing the mixing operations. Recording equipment shall monitor the batching sequence of each component of the mixture and produce a printed record of these operations on each Plant ticket, as specified herein.

If recycled materials are used, the Plant tickets shall include their dry weight, percentage, and daily moisture content.

If a WMA Technology is added at the Plant, the Plant tickets shall include the actual dosage rate.

For drum Plants, the Plant ticket shall be produced at 5 minute intervals and maintained by the vendor for a period of 3 years after the completion of the Project.

For batch Plants, the Plant ticket shall be produced for each bath and maintained by the vendor for a period of 3 years after the completion of the Project. In addition, an asterisk (*) shall be automatically printed next to any individual batch weight(s) exceeding the following tolerances:

Each Aggregate Component	±1.5% of individual or cumulative target weight for each bin
Mineral Filler	±0.5% of the total batch
Bituminous Material	±0.1% of the total batch
Zero Return (Aggregate)	±0.5% of the total batch
Zero Return (Bituminous Material)	±0.1% of the total batch

The entire batching and mixing interlock cut-off circuits shall interrupt and stop the automatic batching operations when an error exceeding the acceptable tolerance occurs in proportioning.

The scales shall not be manually adjusted during the printing process. In addition, the system shall be interlocked to allow printing only when the scale has come to a complete rest. A unique printed character (m) shall automatically be printed on the truck and batch plant printout when the automatic batching

sequence is interrupted or switched to auto-manual or full manual during proportioning.

(d) Aggregates: Aggregate stockpiles shall be managed to prevent segregation and cross contamination. For drum Plants only, the percent moisture content, at a minimum prior to production and half way through production, shall be determined.

(e) Mixture: The dry and wet mix times shall be sufficient to provide a uniform mixture and a minimum particle coating of 95% as determined by AASTO T 195(M).

Bituminous concrete mixtures shall contain no more than 0.5% moisture when tested in accordance with AASHTO T 329.

(f) RAP: RAP moisture content shall be determined a minimum of twice daily (prior to production and halfway through production).

(g) Asphalt Binder: A binder log shall be submitted to the Department's Central Lab on a monthly basis.

(h) Warm mix additive: For mechanically foamed WMA, the water injection rate shall be monitored during production and not exceed 2.0% by total weight of binder. For additive added at the Plant, the dosage rate shall be monitored during production.

(i) Testing Laboratory: The Contractor shall maintain a laboratory to test bituminous concrete mixtures during production. The laboratory shall have a minimum of 300 s.f., have a potable water source and drainage in accordance with the CT Department of Public Health Drinking Water Division, and be equipped with all necessary testing equipment as well as with a PC, printer, and telephone with a dedicated hard-wired phone line. In addition, the PC shall have a high speed internet connection and a functioning web browser with unrestricted access to https://ctmail.ct.gov . This equipment shall be maintained in working order at all times and be made available for use by the Engineer.

The laboratory shall be equipped with a heating system capable of maintaining a minimum temperature of 65°F. It shall be clean and free of all materials and equipment not associated with the laboratory. Sufficient light and ventilation must be provided. During summer months adequate cooling or ventilation must be provided so the indoor air temperature shall not exceed the ambient outdoor temperature.

The laboratory testing apparatus, supplies, and safety equipment shall be capable of performing all the applicable tests in their entirety that are referenced in AASHTO R 35 and AASHTO M 323. The Contractor shall ensure that the Laboratory is adequately supplied at all times during the course of the Project with all necessary testing materials and equipment.

The Contractor shall maintain a list of laboratory equipment used in the acceptance testing processes including, but not limited to, balances, scales, manometer/vacuum gauge, thermometers, and gyratory compactor, clearly showing calibration and/or inspection dates, in accordance with AASHTO R 18. The Contractor shall notify the Engineer if any modifications are made to the equipment within the laboratory. The Contractor shall take immediate action to replace, repair, or recalibrate any piece of equipment that is out of calibration, malfunctioning, or not in operation.

M.04.02—Mix design and Job Mix Formula (JMF)

1. Curb Mix:

(a) Requirements: The Contractor shall use bituminous concrete that meets the requirements of Table M.04.02-1. RAP may be used in 5% increments by weight up to 30%.

(b) Basis of Approval: Annually, an approved JMF based on a mix design for curb mix must be on file with the Engineer prior to use.

The Contractor shall test the mixture for compliance with the submitted JMF and Table M.04.02-1. The maximum theoretical density (Gmm) will be determined by AASHTO T 209. If the mixture does not meet the requirements, the JMF shall be adjusted within the ranges shown in Table M.04.02-1 until an acceptable mixture is produced.

An accepted JMF from the previous operating season may be acceptable to the Engineer provided that there are no changes in the sources of supply for the coarse aggregate, fine aggregate, recycled material (if applicable) and the Plant operation had been consistently producing acceptable mixture.

Any change in component source of supply or consensus properties must be approved by the Engineer. A revised JMF shall be submitted prior to use.

TABLE M.04.02-1:
Control Points for Curb Mix Mixtures

Mix	**Curb Mix**	**Production Tolerances from JMF Target**
Grade of PG **Binder content %**	**PG 64S-22** **6.5 - 9.0**	**0.4**
Sieve Size		
No. 200	3.0 - 8.0 (b)	2.0
No. 50	10 - 30	4
No. 30	20 - 40	5
No. 8	40 - 70	6
No. 4	65 - 87	7
1/4 inch		
3/8 inch	95 - 100	8
1/2 inch	100	8
3/4 inch		8
1 inch		
2 inch		
Additionally, the fraction of material retained between any 2 consecutive sieves shall not be less than 4%.		
Mixture Temperature		
Binder	325°F maximum	
Aggregate	280-350°F	
Mixtures	265-325°F	
Mixture Properties		
Air Voids (VA) %	0 – 4.0 (a)	
Notes: (a) Compaction Parameter 50 gyrations (N_{des}) (b) The percent passing the No. 200 sieve shall not exceed the percentage of bituminous asphalt binder.		

2. Superpave Design Method – S0.25, S0.375, S0.5, and S1:

(a) Requirements: All designated mixes shall be designed using the Superpave mix design method in accordance with AASHTO R 35. A JMF based on the mix design shall meet the requirements of Tables M.04.02-2 to M.04.02-5. Each JMF and component samples must be submitted no less than 7 days prior to production and must be approved by the Engineer prior to use. All JMFs expire at the end of the calendar year.

All aggregate component consensus properties and tensile strength ratio (TSR) specimens shall be tested at an AASHTO Materials Reference Laboratory (AMRL) by NETTCP Certified Technicians.

All bituminous concrete mixes shall be tested for stripping susceptibility by performing the TSR test procedure in accordance with AASHTO T 283(M) at a minimum every 36 months. The compacted specimens may be fabricated at the Plant and then tested at an AMRL accredited facility. A minimum of 45000 grams of laboratory or plant blended mixture and the corresponding complete Form MAT-412s shall be submitted to the Division of Material Testing (DMT) for design TSR testing verification. The mixture submitted shall be representative of the corresponding mix design as determined by the Engineer.

i. Superpave Mixtures with RAP: RAP may be used with the following conditions:
   - RAP amounts up to 15% may be used with no binder grade modification.
   - RAP amounts up to 20% may be used provided a new JMF is approved by the Engineer. The JMF submittal shall include the grade of virgin binder added. The JMF shall be accompanied by a blending chart and supporting test results in accordance with AASHTO M 323 Appendix X1, or by testing that shows the combined binder (recovered binder from the RAP, virgin binder at the mix design proportions, warm mix asphalt additive and any other modifier if used) meets the requirements of the specified binder grade.
   - Two (2) representative samples of RAP shall be obtained. Each sample shall be split, and 1

split sample shall be tested for binder content in accordance with AASHTO T 164 and the other in accordance with AASHTO T 308.

- RAP material shall not be used with any other recycling option.

ii. Superpave Mixtures with RAS: RAS may be used solely in HMA S1 mixtures with the following conditions:

- RAS amounts up to 3% may be used.
- RAS total binder replacement up to 15% may be used with no binder grade modification.
- RAS total binder replacement up to 20% may be used provided a new JMF is approved by the Engineer. The JMF submittal shall include the grade of virgin binder added. The JMF shall be accompanied by a blending chart and supporting test results in accordance with AASHTO M 323 Appendix X1, or by testing that shows the combined binder (recovered binder from the RAP, virgin binder at the mix design proportions, warm mix asphalt additive and any other modifier if used) meets the requirements of the specified binder grade.
- Superpave Mixtures with RAS shall meet AASHTO PP 78 design considerations.

iii. Superpave Mixtures with CRCG: CRCG may be used solely in HMA S1 mixtures. One percent (1%) of hydrated lime, or other accepted non-stripping agent, shall be added to all mixtures containing CRCG. CRCG material shall not be used with any other recycling option.

(b) Basis of Approval: The following information must be included in the JMF submittal:

i. Gradation, consensus properties and specific gravities of the aggregate, RAP or RAS.
ii. Average asphalt content of the RAP or RAS by AASHTO T 164.
iii. Source of RAP or RAS and percentage to be used.
iv. Warm mix Technology, manufacturer's recommended additive rate and tolerances, and manufacturer recommended mixing and compaction temperatures.
v. TSR test report and anti-strip manufacturer and recommended dosage rate if applicable.
vi. Mixing and compaction temperature ranges for the mix with and without the warm-mix technology incorporated.
vii. JMF ignition oven correction factor by AASHTO T 308.

With each JMF submittal, the following samples shall be submitted to the Division of Materials Testing:

- 4 - one (1) quart cans of PG binder, with corresponding Safety Data Sheet (SDS)
- 1 - 50 lbs. bag of RAP
- 2 - 50 lbs. bags of Plant-blended virgin aggregate

A JMF may not be approved if any of the properties of the aggregate components or mix do not meet the verification tolerances as described in the Department's current QA Program for Materials, Acceptance and Assurance Testing Policies and Procedures.

Any material based on a JMF, once approved, shall only be acceptable for use when it is produced by the designated Plant, it utilizes the same components, and the production of material continues to meet all criteria as specified in Tables M.04.02-2, M.04.02-3 and M.04.02-4. A new JMF must be submitted to the Engineer for approval whenever a new component source is proposed.

Only 1 mix with 1 JMF will be approved for production at a time. Switching between approved JMF mixes with different component percentages or sources of supply is prohibited.

TABLE M.04.02-2: Superpave Master Range for Bituminous Concrete Mixture Design Criteria

	S0.25		**S0.375**		**S0.5**		**S1**	
Sieve	Control Points		Control Points		Control Points		Control Points	
inches	Min (%)	Max (%)	Min (%)	Max (%)	Min (%)	Max (%)	Min (%)	Max (%)
2.0	-	-	-	-	-	-	-	-
1.5	-	-	-	-	-	-	100	-
1.0	-	-	-	-	-	-	90	100
3/4	-	-	-	-	100	-	-	90
1/2	100	-	100	-	90	100	-	-
3/8	97	100	90	100	-	90	-	-
No. 4	72	90	-	72	-	-	-	-
No. 8	32	67	32	67	28	58	19	45
No. 16	-	-	-	-	-	-	-	-
No. 30	-	-	-	-	-	-	-	-
No. 50	-	-	-	-	-	-	-	-
No. 100	-	-	-	-	-	-	-	-
No. 200	2.0	10.0	2.0	10.0	2.0	10.0	1.0	7.0
VMA (%)	16.5 ± 1		16.0 ± 1		15.0 ± 1		13.0 ± 1	
VA (%)	4.0 ± 1		4.0 ± 1		4.0 ± 1		4.0 ± 1	
Gse	JMF value		JMF value		JMF value		JMF value	
Gmm	JMF ± 0.030		JMF ± 0.030		JMF ± 0.030		JMF ± 0.030	
Dust / effective binder	0.6 - 1.2		0.6 - 1.2		0.6 - 1.2		0.6 - 1.2	
TSR	≥ 80%		≥ 80%		≥ 80%		≥ 80%	
T-283 Stripping	Minimal as determined by the Engineer							

(c) Mix Status: Each facility will have each type of bituminous concrete mixture rated based on the results of the previous year of production. Mix status will be provided to each bituminous concrete Producer prior to the beginning of the paving season.

The rating criteria are based on compliance with Air Voids and Voids in Mineral Aggregate (VMA) as indicated in Table M.04.03-4 and are calculated as follows:

Criteria A: Percentage of acceptance test results with compliant air voids.

Criteria B: The average of the percentage of acceptance results with compliant VMA and the percentage of acceptance results with compliant air voids.

The final rating assigned will be the lower of the rating obtained with Criteria A or Criteria B.

Mix status is defined as:

"A" – Approved: Assigned to each mixture type from a production facility with a current rating of 70% or greater, or to each mixture type completing a successful PPT.

"PPT" – Pre-Production Trial: Temporarily assigned to each mixture type from a production facility when:

1. there are no compliant acceptance production test results submitted to the Department from the previous year;

2. there is a source change in one or more aggregate components;
3. there is a component percentage change of more than 5% by weight;
4. there is a change in RAP percentage;
5. the mixture has a rating of less than 70% from the previous season;
6. it is a new JMF not previously submitted; or
7. the average of 10 consecutive acceptance results for VFA, Density to N_{ini} or dust to effective binder ratio does not meet the criteria in tables M.04.02-2 and M.04.02-4.

Bituminous concrete mixtures rated with a "PPT" status cannot be used on Department projects. Testing shall be performed by the Producer with NETTCP certified personnel on material under this status. Test results must confirm that specification requirements in Tables M.04.02-2 through M.04.02-4 are met and the binder content (Pb) meets the requirements in Table M.04.03-2 before material can be used. One of the following methods must be used to verify the test results:

Option A: Schedule a day when a Department Inspector can be at the facility to witness testing

Option B: When the Contractor or their representative performs testing without being witnessed by an Inspector, the Contractor shall submit the test results and a split sample including 2 gyratory molds, 5,000 grams of boxed bituminous concrete, and 5,000 grams of cooled loose bituminous concrete for verification testing and approval

Option C: When the Contractor or their representative performs testing without being witnessed by a Department Inspector, the Engineer may verify the mix in the Contractor's laboratory

Witnessing or verifying by the Department of compliant test results will change the mix's status to "A

The differences between the Department's test results and the Contractor's must be within the "C" tolerances included in the Department's QA Program for Materials, Acceptance and Assurance Testing Policies and Procedures in order to be verified.

"U" – Not Approved: Status assigned to a type of mixture that does not have an approved JMF. Bituminous concrete mixtures with a "U" status cannot be used on Department projects.

TABLE M.04.02-3:
Superpave Consensus Properties Requirements for Combined Aggregate

Traffic Level	Design ESALs (80kN) Millions	Coarse Aggregate Angularity[1] ASTM D5821, Minimum %	Fine Aggregate Angularity AASHTO T 304, Method A Minimum %	Flat and Elongated Particles[2] ASTM D4791, Maximum %	Sand Equivalent AASHTO T 176, Minimum %
1	< 0.3	55/- -	40	10	40
2	0.3 to < 3.0	75/- -	40	10	40
3	≥ 3.0	95/90	45	10	45

Notes:
[1] 95/90 denotes that a minimum of 95% of the coarse aggregate, by mass, shall have one fractured face and that a minimum of 90% shall have two fractured faces.
[2] Criteria presented as maximum Percent by mass of flat and elongated particles of materials retained on the No. 4 sieve, determined at 5:1 ratio.

TABLE M.04.02-4: Superpave Traffic Levels and Design Volumetric Properties

Traffic Level	Design ESALs	Number of Gyrations by Superpave Gyratory Compactor			Percent Density of Gmm from HMA/ WMA Specimen			Voids Filled with Asphalt (VFA) Based on Nominal Mix Size - Inch			
	(million)	N_{ini}	N_{des}	N_{max}	N_{ini}	N_{des}	N_{max}	0.25	0.375	0.5	1
1	<0.3	6	50	75	≤91.5	96.0	≤98.0	70-80	70-80	70-80	67-80
2	0.3 to <3.0	7	75	115	≤90.5	96.0	≤98.0	65-78	65-78	65-78	65-78
3	≥3.0	7	75	115	≤90.0	96.0	≤98.0	65-77	65-76	65-75	65-75

TABLE M.04.02-5:
Superpave Minimum Binder Content by Mix Type and Level

Mix Type	Level	Binder Content Minimum
S0.25	1	5.80
S0.25	2	5.70
S0.25	3	5.70
S0.375	1	5.70
S0.375	2	5.60
S0.375	3	5.60
S0.5	1	5.10
S0.5	2	5.00
S0.5	3	5.00
S1	1	4.60
S1	2	4.50
S1	3	4.50

M.04.03—Production Requirements:

1. Standard Quality Control Plan (QCP) for Production: The QCP for production shall describe the organization and procedures, which the Contractor shall use to administer quality control. The QCP shall include the procedures used to control the production process, to determine when immediate changes to the processes are needed, and to implement the required changes. The QCP must detail the inspection, sampling and testing protocols to be used, and the frequency for each.

Control Chart(s) shall be developed and maintained for critical aspect(s) of the production process as determined by the Contractor. The control chart(s) shall identify the material property, applicable upper and lower control limits, and be updated with current test data. As a minimum, the following quality characteristics shall be included in the control charts:

- percent passing No. 4 sieve
- percent passing No. 200 sieve
- binder content
- air voids
- Gmm
- Gse
- VMA

The control chart(s) shall be used as part of the quality control system to document variability of the bituminous concrete production process. The control chart(s) shall be submitted to the Engineer the first day of each month.

The QCP shall also include the name and qualifications of a Quality Control Manager. The Quality

Control Manager shall be responsible for the administration of the QCP, including compliance with the plan and any plan modifications.

The Contractor shall submit complete production testing records to the Engineer within 24 hours in a manner acceptable to the Engineer.

The QCP shall also include the name and qualifications of any outside testing laboratory performing any QC functions on behalf of the Contractor. The QCP must also include a list of sampling and testing methods and frequencies used during production, and the names of all Quality Control personnel and their duties.

Approval of the QCP does not imply any warranty by the Engineer that adherence to the plan will result in production of bituminous concrete that complies with these specifications. The Contractor shall submit any changes to the QCP as work progresses.

2. Acceptance Requirements:

(a) General:

A NETTCP HMA Paving Inspector certified Contractor representative shall obtain a field sample of the material placed at the project site in accordance with AASHTO T 168 using the procedure indicated in Section 5.2.3 or an alternate procedure approved by the Engineer. The field sample shall be quartered by the Contractor in accordance with AASHTO R 47 and placed in an approved container. The container shall be sealed with a security tape provided by the Department and labelled to include the project number, date of paving, mix type, lot and sublot numbers and daily tonnage. The minimum weight of each quartered sample shall be 14000 grams. The Contractor shall transport one of the containers to the Departments Central Laboratory in Rocky Hill, retain one of the containers for potential use in dispute resolution and test the remaining material for acceptance.

The Contractor shall submit all acceptance tests results to the Engineer within 24 hours or prior to the next day's production. All acceptance test specimens and supporting documentation must be retained by the Contractor and may be disposed of with the approval of the Engineer. All quality control specimens shall be clearly labeled and separated from the acceptance specimens.

Contractor personnel performing QC and acceptance testing must be present at the facility prior to, during, and until completion of production, and be certified as a NETTCP HMA Plant Technician or Interim HMA Plant Technician and be in good standing. Production of material for use on State projects must be suspended by the Contractor if such personnel are not present. Technicians found by the Engineer to be non-compliant with NETTCP policies and procedures or Department policies may be removed by the Engineer from participating in the acceptance testing process for Department projects until their actions can be reviewed.

Verification and dispute resolution testing will be performed by the Engineer in accordance with the Department's QA Program for Materials.

Should the Department be unable to validate the Contractor's acceptance test result(s) for a lot of material, the Engineer will use results from verification testing and re-calculate the pay adjustment for that lot. The Contractor may request to initiate the dispute resolution process in writing within 24 hours of receiving the adjustment and must include supporting documentation or test results to justify the request.

(b) Curb Mix Acceptance Sampling and Testing Procedures: Curb Mixes shall be tested by the Contractor at a frequency of 1 test per every 250 tons of cumulative production, regardless of the day of production.

When these mix designs are specified, the following acceptance procedures and AASHTO test methods shall be used:

TABLE M.04.03-1: Curb Mix Acceptance Test Procedures

Protocol	Reference	Description
1	**AASHTO T 30(M)**	Mechanical Analysis of Extracted Aggregate
2	**AASHTO T 168**	Sampling of Bituminous Concrete
3	**AASHTO T 308**	Binder Content by Ignition Oven Method (adjusted for aggregate correction factor)
4	**AASHTO T 209(M)(2)**	Theoretical Maximum Specific Gravity and Density of Bituminous Paving Mixtures
5	**AASHTO T 312(2)**	(1)Superpave Gyratory Molds Compacted to N_{des}
6	**AASHTO T 329**	Moisture Content of Hot-Mix Asphalt (HMA) by Oven Method

Notes: (1) One (1) set equals 2 each of 6-inch molds. Molds to be compacted to 50 gyrations.
(2) Once per year or when requested by the Engineer.

i. Determination of Off-Test Status:

1. Curb Mix is considered "off test" when the test results indicate that any single value for bitumen content or gradation are not within the tolerances shown in Table M.04.02-1 for that mixture. If the mix is "off test," the Contractor must take immediate actions to correct the deficiency and a new acceptance sample shall be tested on the same day or the following day of production.
2. When multiple silos are located at 1 site, mixture supplied to 1 project is considered as coming from 1 source for the purpose of applying the "off test" status.
3. The Engineer may cease supply from the Plant when test results from 3 consecutive samples are not within the JMF tolerances or the test results from 2 consecutive samples not within the control points indicated in Table M.04.02-1 regardless of production date.

ii. JMF Revisions

1. If a test indicates that the bitumen content or gradation are outside the tolerances, the Contractor may make a single JMF revision as allowed by the Engineer prior to any additional testing. Consecutive test results outside the requirements of Table M.04.02-1 JMF tolerances may result in rejection of the mixture.
2. Any modification to the JMF shall not exceed 50% of the JMF tolerances indicated in Table M.04.02-1 for any given component of the mixture without approval of the Engineer. When such an adjustment is made to the bitumen, the corresponding production percentage of bitumen shall be revised accordingly.

(c) Superpave Mix Acceptance:

i. Sampling and Testing Procedures

Production Lot: The lot will be defined as one of the following types:

- Non-PWL Production Lot for total estimated Project quantities per mixture less than 3500 tons: All mixture placed during a single continuous paving operation.
- PWL Production Lot for total estimated Project quantities per mixture of 3500 tons or more: Each 3500 tons of mixture produced within 30 calendar days.

Production Sub Lot:

- For Non-PWL: As defined in Table M.04.03-2
- For PWL: 500 tons (The last sub lot may be less than 500 tons.)

Partial Production Lots (For PWL only): A Lot with less than 3500 tons due to:

- completion of the course;
- a Job Mix Formula revision due to changes in:
  - cold feed percentages over 5%,
  - target combined gradation over 5%,
  - target binder over 0.15%,
  - any component specific gravity; or
- a lot spanning 30 calendar days.

The acceptance sample(s) location(s) shall be selected using stratified - random sampling in accordance with ASTM D3665 based on:

- the total daily estimated tons of production for non-PWL lots, or
- the total size for PWL lots.

One (1) acceptance sample shall be obtained and tested per sub lot with quantities over 125 tons. The Engineer may direct that additional acceptance samples be obtained. For non-PWL lots, one (1) acceptance test shall always be performed in the last sub lot based on actual tons of material produced.

For non-PWL lots, quantities of the same mixture per Plant may be combined daily for multiple State projects to determine the number of sub lots.

The payment adjustment will be calculated as described in 4.06.

TABLE M.04.03-2:
Superpave Acceptance Testing Frequency per Type/Level/Plant for Non-PWL Lots

Daily Quantity Produced in Tons (Lot)	Number of Sub Lots/Tests
0 to 125	0, Unless requested by the Engineer
126 to 500	1
501 to 1,000	2
1,001 to 1,500	3
1,500 or greater	1 per 500 tons or portions thereof

The following test procedures shall be used for acceptance:

TABLE M.04.03-3: Superpave Acceptance Testing Procedures

Protocol	Procedure	Description
1	AASHTO T 168	Sampling of bituminous concrete
2	AASHTO R 47	Reducing samples to testing size
3	AASHTO T 308	Binder content by ignition oven method (adjusted for aggregate correction factor)
4	AASHTO T 30(M)	Gradation of extracted aggregate for bituminous concrete mixture
5	AASHTO T 312	(1)Superpave gyratory molds compacted to N_{des}
6	AASHTO T 166	(2)Bulk specific gravity of bituminous concrete
7	AASHTO R 35	(2)Air voids, VMA
8	AASHTO T 209(M)	Maximum specific gravity of bituminous concrete (average of 2 tests)
9	AASHTO T 329	Moisture content of bituminous concrete

Notes: (1) One (1) set equals 2 each of 6-inch molds. Molds to be compacted to Nmax for PPTs and to Ndes for production testing. The first sub lot of the year shall be compacted to N_{max}.
(2) Average value of 1 set of 6-inch molds.

If the average ignition oven corrected binder content differs by 0.3% or more from the average of the Plant ticket binder content in 5 consecutive tests regardless of the production date (moving average), the Contractor shall immediately investigate, determine an assignable cause, and correct the issue. When 2 consecutive moving average differences are 0.3% or more and no assignable cause has been established, the Engineer may require a new ignition oven aggregate correction factor to be performed or to adjust the current factor by the average of the differences between the corrected binder content and production Plant ticket for the last 5 acceptance results.

The Contractor shall perform TSR testing within 30 days after the start of production for all design levels of HMA- and PMA- S0.5 Plant-produced mixtures, in accordance with AASHTO T 283(M). The TSR test shall be performed at an AMRL certified laboratory by NETTCP certified technicians. The compacted specimens may be fabricated at the Plant and then tested at an AMRL accredited facility. A minimum of 45000 grams of plant blended mixture and the corresponding complete Form MAT-412s shall be submitted to the DMT for production TSR testing verification. The mixture submitted shall be representative of the corresponding mix design as determined by the Engineer. Additionally, the TSR test report and tested specimens shall be submitted to the Engineer for review. Superpave mixtures that require anti-strip additives (either liquid or mineral) shall continue to meet all requirements specified herein for binder and bituminous concrete. The Contractor shall submit the name, manufacturer, percent used, technical datasheet and SDS for the anti-strip additive (if applicable) to the Engineer.

i. Determination of Off-Test Status:
   1. Superpave mixes shall be considered *"off test"* when any control point sieve, binder content, VA, VMA, and Gmm value is outside of the limits specified in Table M.04.03-4 or the target binder content at the Plant is below the minimum binder content stated in Table M.04.02-5. Note that further testing of samples or portions of samples not initially tested for this purpose cannot be used to change the status.
   2. Any time the bituminous concrete mixture is considered off-test:
      A. The Contractor shall notify the Engineer when the Plant is *"off test"* for any mix design that is delivered to the Project in any production day. When multiple silos are located at 1 site, mixture supplied to 1 project is considered as coming from 1 source for the purpose of applying the *"off test"* determination.
      B. The Contractor must take immediate actions to correct the deficiency, minimize *"off test"* production to the Project, and obtain an additional Process Control (PC) test after any corrective action to verify production is in conformance with the specifications. A PC test will not be used for acceptance and is solely for the use of the Contractor in its quality control process.

ii. Cessation of Supply for Superpave Mixtures in Non-PWL Lots:
   A mixture **shall not be used** on Department projects when it is "off test" for:
   1. four (4) consecutive tests in any combination of VA, VMA or Gmm, regardless of date of

production, or

2. two (2) consecutive tests in the control point sieves in 1 production shift.

As a result of cessation of supply, the mix status will be changed to PPT

iii. JMF revisions:

JMF revisions are only permitted prior to or after a production shift. A JMF revision is effective from the time it was submitted and is not retroactive to the previous test(s).

JMF revisions shall be justified by a documented trend of test results.

Revisions to aggregate or RAP specific gravities are only permitted when testing is performed at an AMRL certified laboratory by NETTCP certified technicians.

A JMF revision is required when the Plant target RAP or bin percentage deviates by more than 5% or the Plant target binder content deviates by more than 0.15% from the active JMF.

TABLE M.04.03-4: Superpave Mixture Production Requirements

	S0.25		**S0.375**		**S0.5**		**S1**		Tolerances
Sieve	Control Points		Control Points		Control Points		Control Points		From JMF Targets(2)
inches	Min (%)	Max (%)	Min (%)	Max (%)	Min (%)	Max (%)	Min (%)	Max (%)	+/- Tolerance
1.5	-	-	-	-	-	-	100	-	
1.0	-	-	-	-	-	-	90	100	
3/4	-	-	-	-	100	-	-	90	
1/2	100	-	100	-	90	100	-	-	
3/8	97	100	90	100	-	90	-	-	
No. 4	72	90	-	72	-	-	-	-	
No. 8	32	67	32	67	28	58	19	45	
No. 16	-	-	-	-	-	-	-	-	
No. 200	2.0	10.0	2.0	10.0	2.0	10.0	1.0	7.0	
Pb	JMF value		JMF value		JMF value		JMF value		0.3(3)
VMA (%)	16.5		16.0		15.0		13.0		1.0(4)
VA (%)	4.0		4.0		4.0		4.0		1.0(5)
Gmm	JMF value		JMF value		JMF value		JMF value		0.030
Mix Temp. – HMA(6)	265-325°F (1)		265-325°F (1)		265-325°F (1)		265-325°F (1)		
Mix Temp. – PMA(6)	285-335°F (1)		285-335°F (1)		285-335°F (1)		285-335°F (1)		
Prod. TSR	N/A		N/A		≥80%		N/A		
T-283 Stripping	N/A		N/A		Minimal TBD by the Engineer		N/A		

Notes: (1) 300°F minimum after October 15.

(2) JMF tolerances shall be defined as the limits for production compliance.

(3) 0.4 for PWL lots

(4) 1.3 for all PWL lots except S/P 0.25 mixes. 1.1 for S/P 0.25 Non-PWL lots. 1.4 for S/P 0.25 PWL lots

(5) 1.2 for PWL lots

(6) Also applies to placement

Table M.04.03-5:
Modifications to Standard AASHTO and ASTM Test Specifications and Procedures

AASHTO Standard Method of Test	
Reference	**Modification**
T 30	Section 7.2 through 7.4 Samples are not routinely washed for production testing
T 209	Section 7.2 The average of 2 bowls is used proportionally in order to satisfy minimum mass requirements. 8.3 Omit Pycnometer method.
T 283	When foaming technology is used, the material used for the fabrication of the specimens shall be cooled to room temperature, and then reheated to the manufacturer's recommended compaction temperature prior to fabrication of the specimens.
AASHTO Standard Recommended Practices	
Reference	**Modification**
R 26	All laboratory technician(s) responsible for testing PG binders shall be certified or Interim Qualified by NETTCP as a PG Asphalt Binder Lab Technician. All laboratories testing binders for the Department are required to be accredited by the AMRL. Sources interested in being approved to supply PG binders to the Department by use of an "in-line blending system" must record properties of blended material and additives used. Each source of supply of PG binder must indicate that the binders contain no additives used to modify or enhance their performance properties. Binders that are manufactured using additives, modifiers, extenders, etc., shall disclose the type of additive, percentage and any handling specifications or limitations required. All AASHTO M 320 references shall be replaced with AASHTO M 332. Once a month, 1 split sample and test results for each asphalt binder grade and each lot shall be submitted by the PG binder supplier to the Department's Central Lab. Material remaining in a certified lot shall be re-certified no later than 30 days after initial certification. Each April and September, the PG binder supplier shall submit test results for 2 BBR tests at 2 different temperatures in accordance with AASHTO R 29.

Attachment 2- DOT Maintenance Section Map

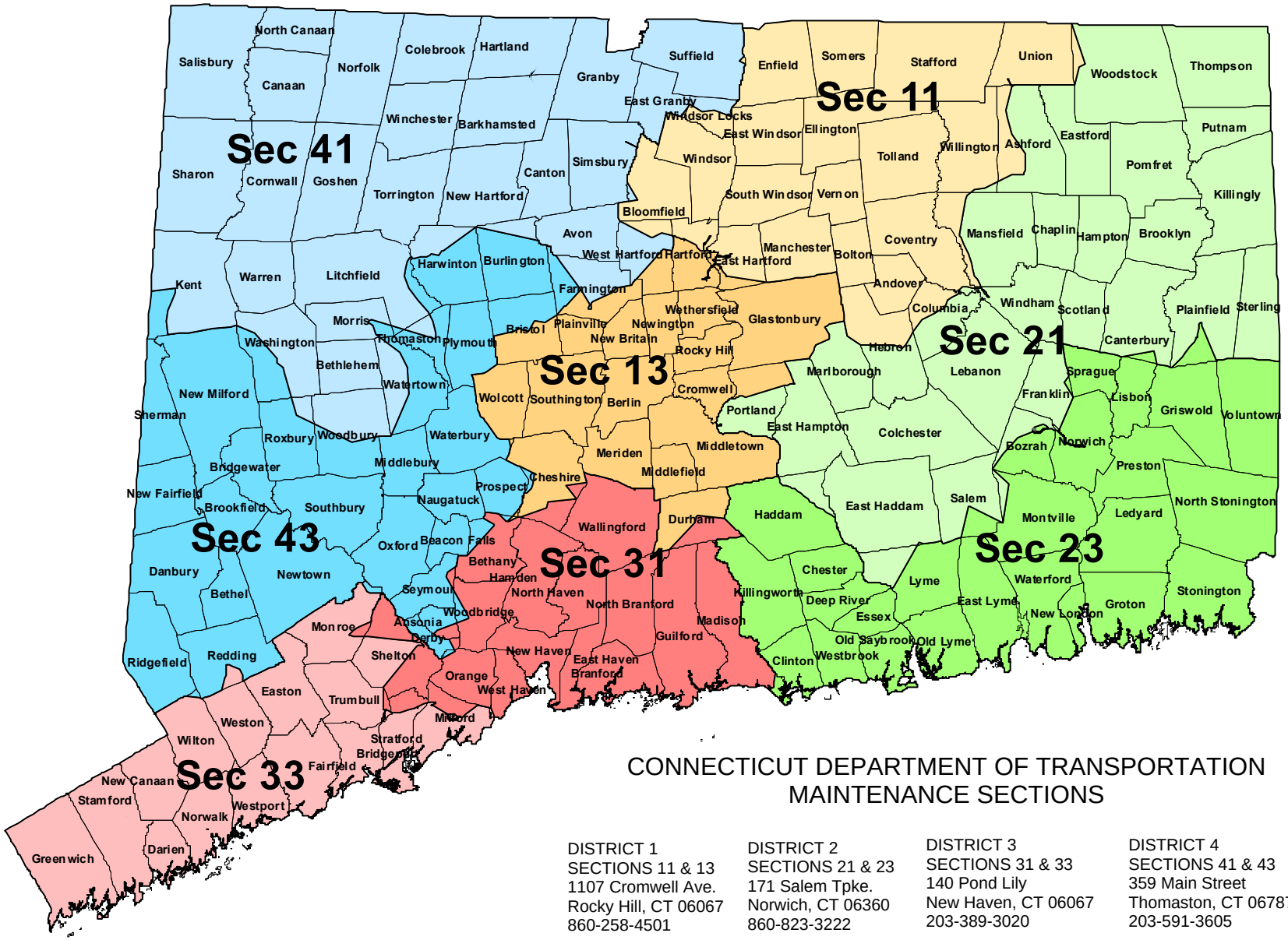

CONNECTICUT DEPARTMENT OF TRANSPORTATION
MAINTENANCE SECTIONS

DISTRICT 1
SECTIONS 11 & 13
1107 Cromwell Ave.
Rocky Hill, CT 06067
860-258-4501

DISTRICT 2
SECTIONS 21 & 23
171 Salem Tpke.
Norwich, CT 06360
860-823-3222

DISTRICT 3
SECTIONS 31 & 33
140 Pond Lily
New Haven, CT 06067
203-389-3020

DISTRICT 4
SECTIONS 41 & 43
359 Main Street
Thomaston, CT 06787
203-591-3605

Contract # 18PSX0311
Attachment 3- Bituminous Concrete Materials Plant and Delivery Information

			Complete the following, if material is being furnished from a plant not owned by the Contractor		Hot materials ordered for patch from December 1st through March 31st (50 Ton Minimum)		Additional cost per Ton for pickup of materials before or after close of normal work day
Contractor Information	**Quantity Available Per Day At Plant Per Ton**	**Mass That Consititutes A Minimum Truck Load Per Ton**	**Name Of Supplier**	**Plant Location**	**Plant Location**	**Bituminous Concrete Class 2 Bituminous Concrete Class 12 Level 2 – HMA S0.375, S0.25**	**Additional Cost Per Ton**
A.E.N. Asphalt, Inc. 45 Lebanon Road Franklin, CT 06254 860-885-0500 (Day) 860-334-6269 (Night)	1500 Ton	N/A	N/A	N/A	N/A	N/A	$5.00 per Ton/ $250.00 per hour
Adelman Sand & Gravel Inc. 34 Bozrah Street Bozrah, CT 06334 860-501-0265	N/A	N/A	N/A	N/A	N/A	N/A	$5.00 per Ton/ $125.00 per hour
American Industries, Inc. 630 Plainfield Road Jewett City, CT 06351 860-376-2537	1800 Ton	23 Ton	N/A	N/A	630 Plainfield Road Jewett City, CT 06351	$250.00 per Ton	$25.00 per Ton/ $500.00 per hour
B. Metcalf Asphalt Paving Inc. 104 Interlaken Road Lakeville, CT 06039 860-672-5236	1200 Ton	22 Ton	N/A	N/A	N/A	N/A	N/A
Galasso Materials L.L.C 60 South Main Streeet East Granby, CT 06026 860-653-2524	2000 Ton	20 Ton	N/A	N/A	60 South Main Street East Granby, CT 06026	$474.85 per Ton	$25.00 per Ton
Hain Materials Corp. 249 Windham Center Rd Windham, CT 06280-0245 860-423-9691	1000 Ton	21 Ton	N/A	N/A	N/A	N/A	$25.00 per Ton
JSL Asphalt, Inc. 75 King Spring Road Windsor Locks, CT 06096 860-292-1508	1200 Ton	20 Ton	N/A	N/A	N/A	N/A	$10.00 per Ton
Killingly Asphalt Products LLC 514 Wildwood Way Dayville, CT 06241 860-774-7550	1200 Ton	23 Ton	N/A	N/A	N/A	N/A	$28.00 per Ton
Laydon Industries, LLC 51 Longhini Lane New Haven, CT 06519 203-562-7283	60 Ton	20 Ton	Cold Mix Manufacturing	65 Edison Avenue Mount Vernon, NY 10550	N/A	N/A	$75.00 per Ton
O & G Industries, Inc. Bridgeport, CT 860-489-9261	4000 Ton	15 Ton/ 3 Axle 20 Ton/ 4 Axle	N/A	N/A	N/A	N/A	$50.00 per Ton
O & G Industries, Inc. Canal Street Stamford, CT 860-489-9261	2000 Ton	15 Ton/ 3 Axle 20 Ton/ 4 Axle	N/A	N/A	N/A	N/A	$50.00 per Ton

O & G Industries, Inc. Davenport Street Stamford, CT 860-489-9261	1500 Ton	15 Ton/ 3 Axle 20 Ton/ 4 Axle	N/A	N/A	N/A	N/A	$50.00 per Ton
O & G Industries, Inc. Woodbury, CT (860) 489-9261	2000 Ton	15 Ton/ 3 Axle 20 Ton/ 4 Axle	N/A	N/A	N/A	N/A	$50.00 per Ton
O & G Industries, Inc. Waterbury, CT 860-489-9261	3000 Ton	15 Ton/ 3 Axle 20 Ton/ 4 Axle	N/A	N/A	N/A	N/A	$50.00 per Ton
O & G Industries, Inc. New Milford, CT (860) 489-9261	1500 Ton	15 Ton/ 3 Axle 20 Ton/ 4 Axle	N/A	N/A	N/A	N/A	$50.00 per Ton
O & G Industries, Inc. Harwinton, CT 860-489-9261	2000 Ton	15 Ton/ 3 Axle 20 Ton/ 4 Axle	N/A	N/A	N/A	N/A	$50.00 per Ton
Palmer Paving Corporation 25 Blanchard Street Palmer, MA 01069 1-800-244-8354	1000 Ton	20 Ton	N/A	N/A	N/A	N/A	$100.00 0 - 10 Tons $ 75.00 11 - 25 Tons $ 50.00 26 - 50 Tons $ 40.00 51 - 100 Tons $ 30.00 101 + Tons
Palmer Paving Corporation 1000 Page Boulevard Springfield, MA 01104 1-800-244-8354	1000 Ton	20 Ton	N/A	N/A	N/A	N/A	$100.00 0 - 10 Tons $ 75.00 11 - 25 Tons $ 50.00 26 - 50 Tons $ 40.00 51 - 100 Tons $ 30.00 101 + Tons
The L. Suzio Asphalt Co., Inc. 975 Westfield Road Meriden, CT 06450 860-237-8421	1000 Ton	22 Ton	N/A	N/A	N/A	N/A	$50.00 per Ton
Tilcon Connecticut, Inc. 1 Forest Road North Branford, CT 860-224-6005	2500 Ton	N/A	N/A	N/A	N/A	N/A	$25.00 per Ton
Tilcon Connecticut, Inc. 567 South Leonard Street Waterbury, CT 860-224-6005	600 Ton	N/A	N/A	N/A	N/A	N/A	$25.00 per Ton
Tilcon Connecticut, Inc. 155 Pine Rock Avenue Hamden, CT 860-224-6005	600 Ton	N/A	N/A	N/A	N/A	N/A	$25.00 per Ton
Tilcon Connecticut, Inc. Black Rock Ave Plainville/New Britain, CT 860-224-6005	2500 Ton	N/A	N/A	N/A	N/A	N/A	$25.00 per Ton
Tilcon Connecticut Inc. 1605 Durham Road Wallingford, CT 860-224-6005	1500 Ton	N/A	N/A	N/A	N/A	N/A	$25.00 per Ton
Tilcon Connecticut, Inc. 569 North Main Street Manchester, CT 860-224-6005	600 Ton	N/A	N/A	N/A	N/A	N/A	$25.00 per Ton

Tilcon Connecticut, Inc. 1 Boston Post Road Old Saybrook, CT 860-224-6005	600 Ton	N/A	N/A	N/A	N/A	N/A	$25.00 per Ton
Tilcon Connecticut Inc. Plumtress Road Danbury, CT 860-224-6005	1500 Ton	N/A	N/A	N/A	N/A	N/A	$25.00 per Ton
Tilcon Connecticut, Inc. 185 South Road Groton, CT 860-224-6005	1000 Ton	N/A	N/A	N/A	N/A	N/A	$25.00 per Ton
Wescon Corp. of Connecticut 36 Elmata Avenue Pawcatuck, CT 860-599-2500	1000 Ton	21 Ton	N/A	N/A	835 Taunton Avenue East Providence, RI 02914	$100.00 per Ton	$10.00 per Ton