STATE OF CONNECTICUT

NED LAMONT, GOVERNOR

DEPARTMENT OF ENERGY AND ENVIRONMENTAL PROTECTION

KATIE DYKES
COMMISSIONER

GILLETTE CASTLE CANOPY REPLACEMENT

GILLETTE CASTLE
67 RIVER ROAD
EAST HADDAM, CONNECTICUT

PROJECT NO. DEPA - 00013203102

SEPTEMBER 1, 2020

ENGINEER:

CME ASSOCIATES, INC.
33 WILBUR CROSS WAY,
MANSFIELD, CONNECTICUT 06268
PH: 888-291-3227

STAMP

ARCHITECT:

EVELYN COLE SMITH ARCHITECTS, LLC
134 MAIN ST
PUTNAM, CONNECTICUT 06260
PH: 860-315-9570

STAMP

QUALITY CONTROL CERTIFICATION		
GROUP	REVIEWED	DATE
PROJECT MANAGER		
SURVEY		
ENVIRONMENTAL		
CIVIL		
STRUCTURAL		
ARCHITECTURAL		

CME ASSOCIATES, INC.
33 Wilbur Cross Way, Mansfield, CT 06268
101 East River Drive, East Hartford, CT 06108
888-291-3227 | www.cmeengineering.com

EVELYN COLE SMITH ARCHITECTS, LLC
PO Box 182
134 Main St
Putnam, CT
06260
860 315 9570
www.ecsarchitects.com

GILLETTE CASTLE CANOPY STRUCTURAL DRAWINGS
PREPARED FOR
CONNECTICUT DEPARTMENT OF ENERGY
& ENVIRONMENTAL PROTECTION
67 RIVER ROAD
EAST HADDAM, CONNECTICUT

DATE: 4/24/2018
PROJECT: #2017036

REVISIONS

NO.	DATE	DESCRIPTION	BY

JOB DATA

PROJECT	2017036.100
BOOK NO.	
DESIGNED	EMC
DRAWN	EMC
CHECKED	MPC
COGO FILE	
FILE	

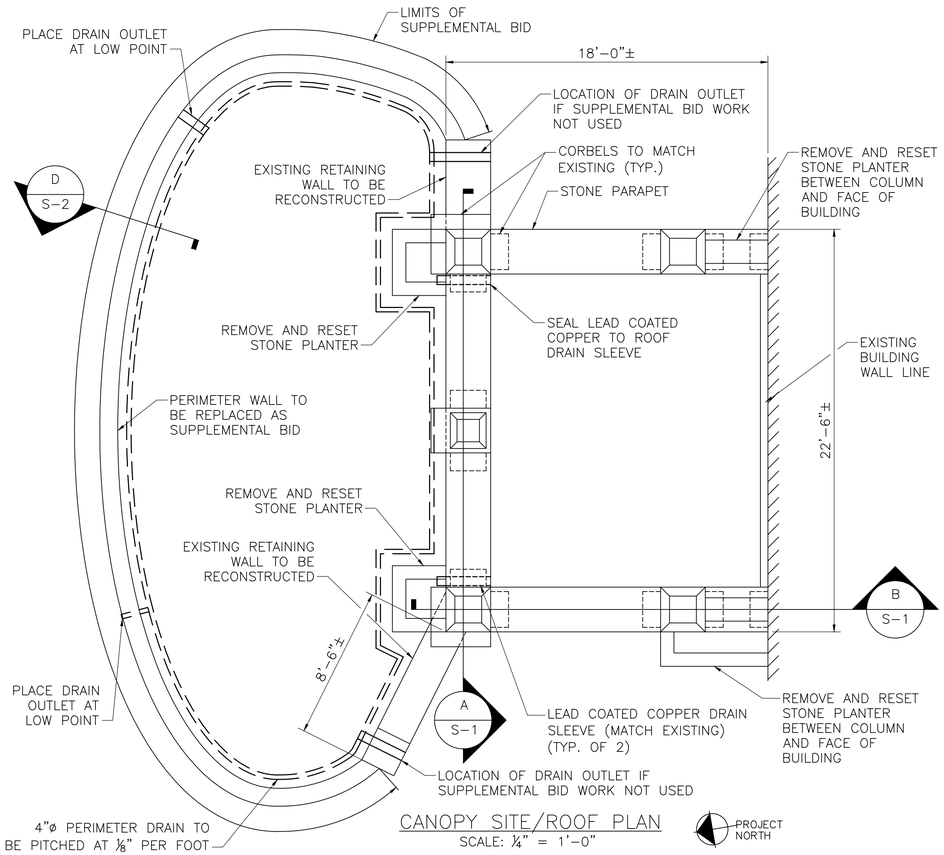

CANOPY SITE/ROOF PLAN
SCALE: ¼" = 1'-0"

GENERAL NOTES

1. ALL DIMENSIONS LABELED PLUS/MINUS ARE APPROXIMATE AND FOR REFERENCE ONLY. PROPOSED STRUCTURE IS TO MATCH EXISTING DIMENSIONS AND SURFACE CONSTRUCTION AS CLOSELY AS POSSIBLE. VARIATION FROM THE PROVIDED DIMENSIONS BY UP TO 2 INCHES IS ACCEPTABLE.
2. ANY DISCREPANCIES BETWEEN THESE DRAWINGS AND AS-BUILT CONDITIONS SHALL BE BROUGHT TO THE ATTENTION OF THE ENGINEER IMMEDIATELY BEFORE PROCEEDING WITH THE WORK.
3. THE CONTRACTOR SHALL SUBMIT SHOP DRAWINGS TO THE ENGINEER AND RECEIVE HIS APPROVAL BEFORE FABRICATION OF THE MATERIAL. THE DETAILING OF ALL WORK IS A PART OF THE CONTRACT AND SHALL BE PERFORMED IN ACCORDANCE WITH THE REQUIREMENTS OF THE CODES SPECIFIED.
4. THE CONTRACTOR SHALL BE RESPONSIBLE FOR ALL SHORING AND BRACING REQUIRED DURING DEMOLITION/CONSTRUCTION. TEMPORARY SUPPORTS REQUIRED FOR STABILITY DURING ALL INTERMEDIATE STAGES OF CONSTRUCTION SHALL BE DESIGNED, FURNISHED, AND INSTALLED BY THE CONTRACTOR.
5. ALL WORKMANSHIP, MATERIAL, AND DESIGN SHALL CONFORM TO THE REFERENCED BUILDING CODE.
6. ALL DEMOLITION WORK SHALL BE IN STRICT CONFORMANCE WITH THE CONNECTICUT STATE BUILDING CODE.
7. EXISTING BUILDING STONE TO BE STOCKPILED, CLEANED OF MORTAR AND REUSED TO THE GREATEST EXTENT POSSIBLE.
8. EXISTING RETAINING WALL STONE TO BE REUSED IN NEW RETAINING WALL.
9. CONTRACTOR TO PROVIDE MORTAR SAMPLES TO MATCH HISTORIC MORTAR FOR APPROVAL BY SHPO AND DEEP.
10. CONTRACTOR TO INSTALL MOCKUP OF STONE VENEER AND MORTAR PANEL FOR APPROVAL.
11. CONTRACTOR TO PHOTO DOCUMENT EXISTING LEAD COATED COPPER ROOF LAYOUT AND DETAILS. EXISTING DIMENSIONS SHALL BE DOCUMENTED SUCH THAT THE NEW LEAD COATED COPPER ROOF WILL BE CONSTRUCTED TO MATCH THE ORIGINAL ROOF.
12. DEMOLITION OF EXISTING STRUCTURE IS NOT TO TOP OF LEDGE, OR INTO THE BUILDING WALL, EXCEPT AS NOTED TO PROVIDE SUPPORT FOR INTERIOR BEAM. THE BID SHALL BE BASED ON AN ASSUMED DEPTH TO BEDROCK OF 24".
13. GILLETTE CASTLE IS A NATIONAL REGISTER OF HISTORIC PLACES PROPERTY. ALL WORK TO BE IN STRICT ACCORDANCE WITH THE SECRETARY OF THE INTERIOR'S STANDARDS FOR THE TREATMENT OF HISTORIC PROPERTIES.
14. PRIOR TO THE DEMOLITION OF THE PORTICO, EACH FACE SHALL BE PHOTOGRAPHED AND KEYED TO PLAN AND ELEVATION VIEWS.
15. ALL PERIMETER WALL AND DRAIN WORK TO BE PREPARED AS A SUPPLEMENTAL BID (LIMITS SHOWN ON PLAN)
16. ADDITIONAL NOTES ON NEXT SHEET.

CONCRETE

1. ALL CONCRETE WORK SHALL CONFORM TO ACI 301 "SPECIFICATIONS FOR STRUCTURAL CONCRETE FOR BUILDINGS".
2. REINFORCING SHALL BE DETAILED IN ACCORDANCE WITH ACI 315 "MANUAL OF STANDARD PRACTICE FOR DETAILING REINFORCED CONCRETE STRUCTURES".
3. ALL REINFORCING FOR SLAB SHALL BE CONTINUOUS; LAPPED IN ACCORDANCE WITH ACI 318-11, CHAPTER 12, AT ALL SPLICES, CORNERS AND INTERSECTIONS.
4. REINFORCING BARS SHALL BE PROTECTED BY THE FOLLOWING THICKNESS OF CONCRETE COVER:
   A. CONCRETE PLACED AGAINST EARTH 3"
   B. CONCRETE PLACED IN FORMS BUT EXPOSED TO EARTH OR WEATHER 2" (EXCEPT FOR NO. 5 BARS OR SMALLER, 1 1/2").
   C. SLABS AND WALLS NOT EXPOSED TO THE GROUND OR WEATHER 3/4"
   D. IN ALL CASES THE THICKNESS OF CONCRETE OVER THE REINFORCEMENT SHALL BE AT LEAST EQUAL TO THE DIAMETER OF THE REINFORCEMENT.
5. ALL CONCRETE WORK SHALL BE CONTROLLED AND UNDER THE SUPERVISION OF THE TESTING ENGINEER FOR ALL MIXING, TRANSPORTING AND PLACING OPERATIONS.
6. CONCRETE SHALL BE AIR ENTRAINED.
7. FOR CONSTRUCTION DURING COLD WEATHER, ALL CONCRETE WILL REQUIRE PROTECTION FROM FREEZING TEMPERATURES IN ACCORDANCE WITH ACI 306. FOR CONSTRUCTION DURING HOT WEATHER, ALL CONCRETE WILL REQUIRE PROTECTION FROM HIGH TEMPERATURES IN ACCORDANCE WITH ACI 305.

MATERIALS

NORMAL WEIGHT CONCRETE	f'c=4000 PSI AT 28 DAYS
REINFORCING STEEL	ASTM A-615, GRADE 60

DESIGN CODES

1. BUILDING CODE: 2015 INTERNATIONAL BUILDING CODE PORTION OF THE 2018 CONNECTICUT STATE BUILDING CODE

DESIGN LOADS

A. LIVE LOADS:

ROOF LIVE LOAD:	20 PSF

B. SNOW LOADS:

GROUND SNOW LOAD, Pg:	30 PSF
FLAT SNOW LOAD, Pf:	30 PSF
SNOW IMPORTANCE FACTOR:	1.0
SNOW EXPOSURE FACTOR:	1.0
THERMAL FACTOR, Ct:	1.2

C. DEAD LOADS:

SELF WEIGHT OF MATERIALS AND SUPERIMPOSED LOADS

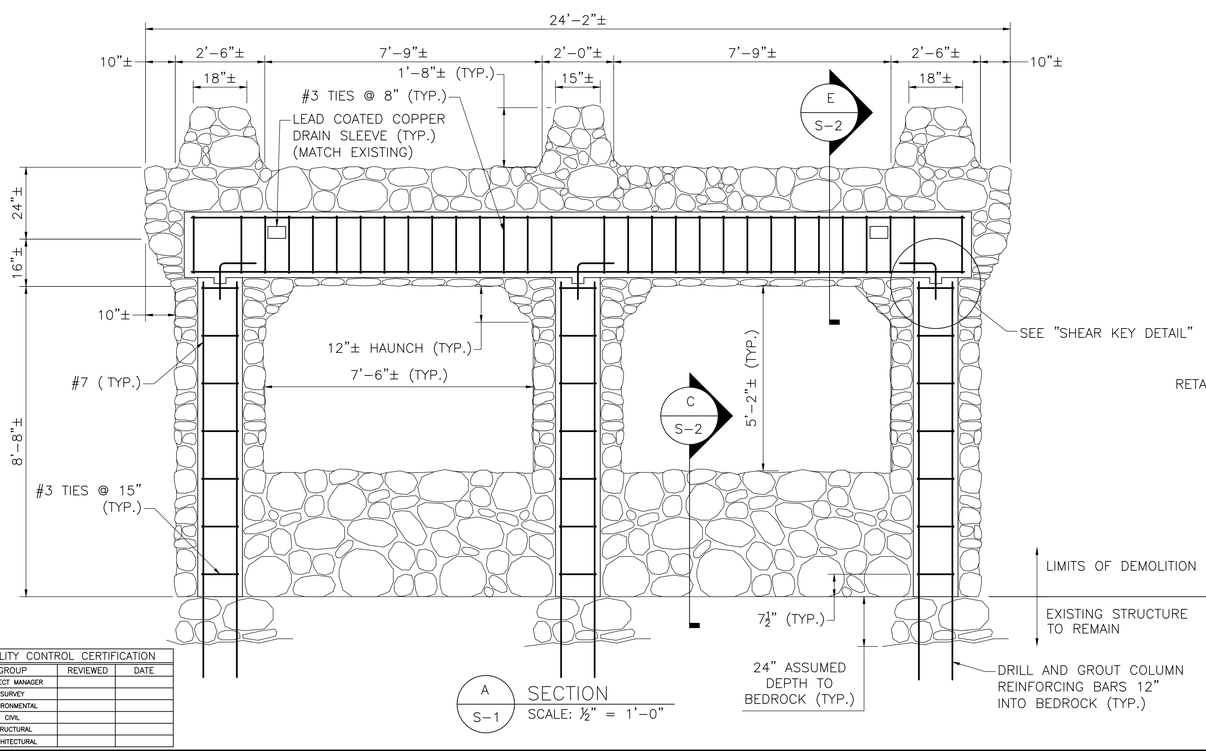

A S-1 SECTION
SCALE: ½" = 1'-0"

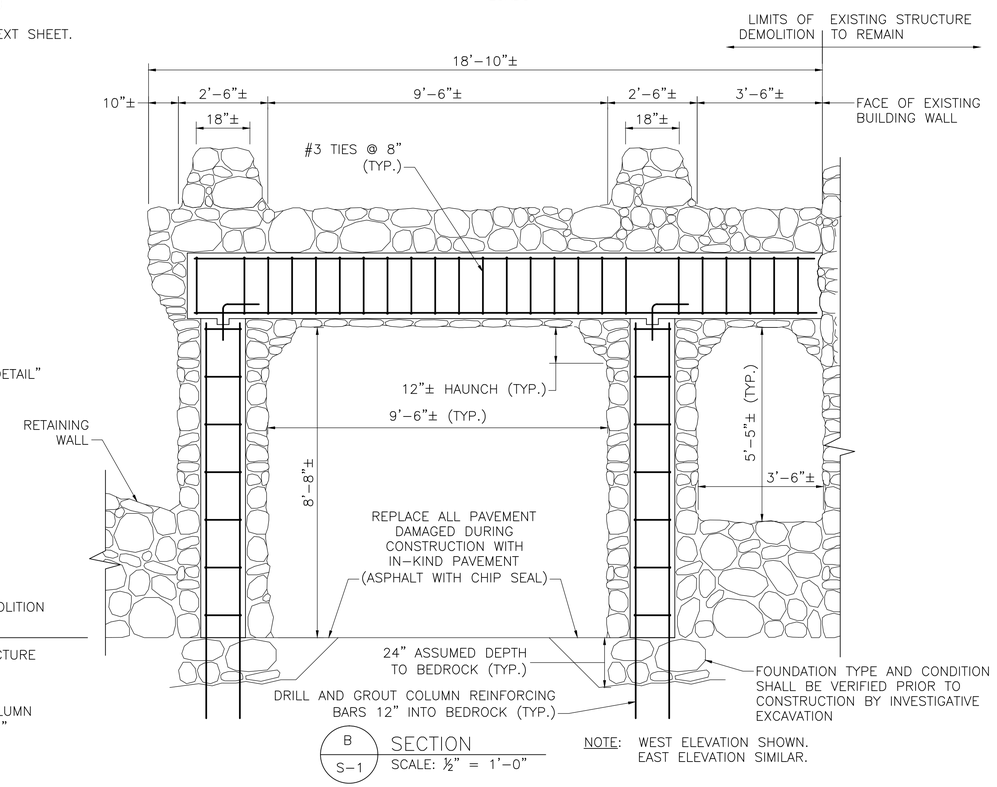

B S-1 SECTION
SCALE: ½" = 1'-0"

NOTE: WEST ELEVATION SHOWN. EAST ELEVATION SIMILAR.

QUALITY CONTROL CERTIFICATION		
GROUP	REVIEWED	DATE
PROJECT MANAGER		
SURVEY		
ENVIRONMENTAL		
CIVIL		
STRUCTURAL		
ARCHITECTURAL		

CME ASSOCIATES, INC.
33 Wilbur Cross Way, Mansfield, CT 06268
101 East River Drive, East Hartford, CT 06108
888-291-3227 | www.cmeengineering.com
CME
EVELYN COLE SMITH ARCHITECTS, LLC
PO Box 182
134 Main St
Putnam, CT
06260
860 315 9570
www.ecsarchitects.com

GILLETTE CASTLE CANOPY STRUCTURAL DRAWINGS
PREPARED FOR
CONNECTICUT DEPARTMENT OF ENERGY & ENVIRONMENTAL PROTECTION
67 RIVER ROAD
EAST HADDAM, CONNECTICUT

DATE: 4/24/2018
PROJECT: #2017036

REVISIONS			
NO.	DATE	DESCRIPTION	BY

JOB DATA	
PROJECT	2017036.100
BOOK NO.	
DESIGNED	EMC
DRAWN	EMC
CHECKED	MPC
CODD FILE	
FILE	

S-1

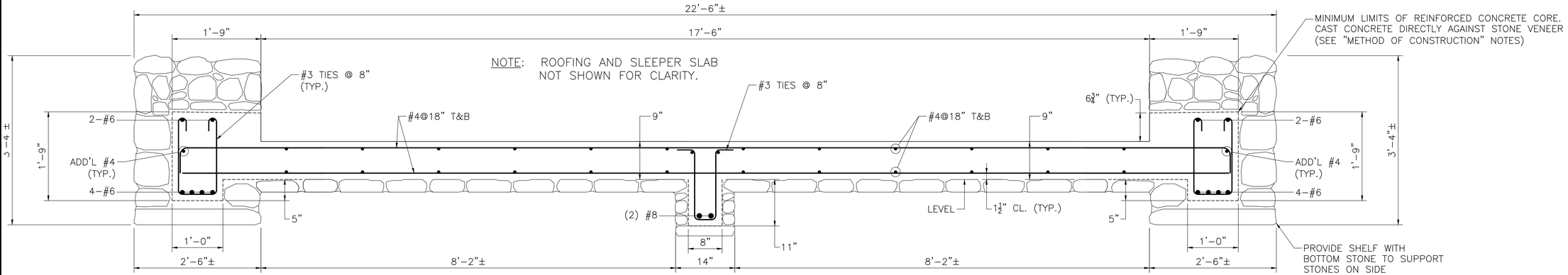

SECTION THROUGH CANOPY SLAB
SCALE: 1" = 1'-0"

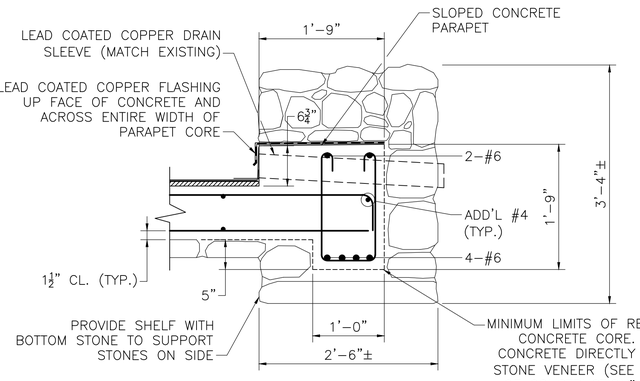

E — SECTION
SCALE: 1" = 1'-0"

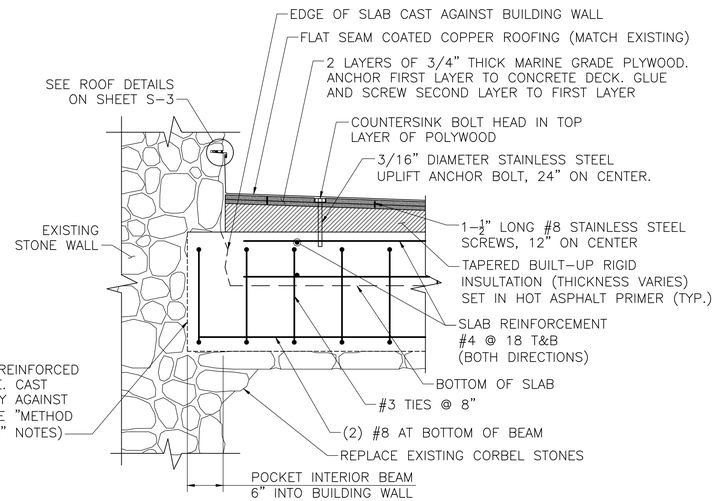

BEAM ATTACHMENT TO WALL
SCALE: 1" = 1'-0"

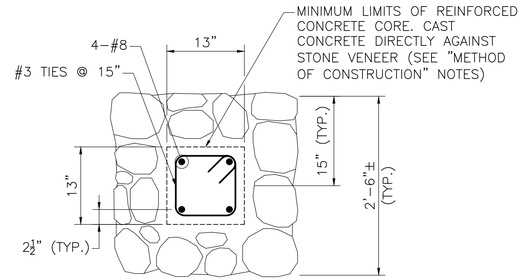

TYPICAL COLUMN SECTION
SCALE: 1" = 1'-0"

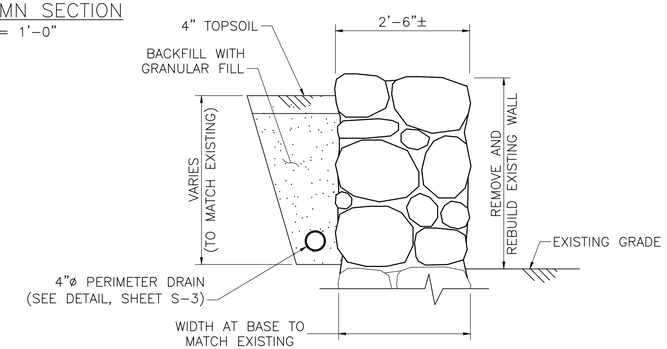

C — SECTION AT RETAINING WALL
SCALE: ¾" = 1'-0"

DISMANTLING NOTES

IT IS IMPERATIVE THAT THE RECONSTRUCTED STRUCTURE MATCH THE EXISTING STRUCTURE IN SHAPE, CONTOURS, AND APPEARANCE. THE RECONSTRUCTED STRUCTURE SHALL MATCH THE EXISTING. TO THAT END, THE FOLLOWING METHODS OF DEMOLITION SHALL BE FOLLOWED:

1. ALL EXPOSED STONE SURFACES SHALL BE PHOTO DOCUMENTED PRIOR TO DEMOLITION. DETAILED HIGH-QUALITY PHOTOGRAPHS SHALL BE TAKEN THAT DOCUMENT THE EXACT PATTERN AND TEXTURE OF THE EXISTING SURFACES.
2. ALL EXPOSED STONES SHALL BE CAREFULLY LABELED AND NUMBERED DURING DEMOLITION. THE STONES SHALL BE MARKED SO THAT THE MARKINGS WILL NOT RUB OFF OR BE VISIBLE IN THE COMPLETED STRUCTURE. IT IS RECOMMENDED THAT MARKING BE PLACED ON THE TOP (OR BOTTOM) OF EACH STONE DENOTING THE TOP (OR BOTTOM), THE ORIENTATION OF PLACEMENT (FRONT OR BACK).
3. THE STONES SHALL BE CLEANED OF ALL DELETERIOUS MATERIALS AND STORED IN SUCH A MANNER AS TO BE EASILY RECONSTRUCTED. AREAS OF STONES SHALL BE STORED TOGETHER TO NOT MIX UP THE RECONSTRUCTED PATTERN.
4. IF ANY VARIATIONS IN THE MAKE-UP OF THE STRUCTURE ARE FOUND DURING DEMOLITION, THE WORK IN THAT ARE SHALL STOP AND THE CONTRACTOR SHALL NOTIFY THE DEPARTMENT IMMEDIATELY. SIGNIFICANT VARIATIONS MAY NEED TO BE ADDRESSED BY THE STATE HISTORIC PRESERVATION OFFICE PRIOR TO COMMENCEMENT OF THE WORK.

QUALITY CONTROL CERTIFICATION		
GROUP	REVIEWED	DATE
PROJECT MANAGER		
SURVEY		
ENVIRONMENTAL		
CIVIL		
STRUCTURAL		
ARCHITECTURAL		

NOTES

1. ALL EXPOSED MASONRY SHALL BE TREATED WITH A WATERPROOFING SEALER (KLERE-TREAT WB SILANE PENETRATING SEALER OR APPROVED EQUAL).
2. THE DEEP WILL PROVIDE ANY ADDITIONAL STONE REQUIRED TO COMPLETE THE PROJECT.
3. NEW STONE WORK SHALL MATCH EXISTING PATTERNS AND THICKNESS OF MORTAR JOINTS.
4. REMOVE AND RESET STONE PLANTERS TO THE LEVEL OF THE DRIVEWAY WITH DETAILS MATCHING THE EXISTING CONDITION, EXCEPT THAT THE PLANTERS SHALL BE DRAINED WITH A 2" DIAMETER PVC DRAIN (ONE PER PLANTER)
5. REPLACE ALL PAVEMENT DAMAGED DURING CONSTRUCTION WITH IN-KIND PAVEMENT (ASPHALT WITH STONE CHIP SEAL)

METHOD OF CONSTRUCTION – OVERHEAD STONES

1. SET FORMWORK TO ELEVATION OF BOTTOM OF STONES.
2. PLACE STONES ON TOP OF THE FORM.
3. THE LAYOUT SHALL BE THE SAME AS THE EXISTING STRUCTURE.
4. PLACE 1/2" DEEP SAND IN THE JOINTS BETWEEN THE STONES TO PREVENT CONCRETE FROM FILLING THE JOINTS FLUSH WITH THE SURFACE OF THE STONE.
5. PLACE REINFORCING STEEL.
6. CAST CONCRETE ON TOP OF THE STONES.
7. CURE CONCRETE UNTIL THE CONCRETE COMPRESSIVE STRENGTH HAS REACHED 3000 PSI.
8. STRIP FORMS.
9. CLEAN JOINTS BETWEEN THE STONES.
10. PLACE MORTAR IN THE JOINTS USING POINTING TOOLS.
11. CLEAN STONE SURFACES WHEN COMPLETE.

METHOD OF CONSTRUCTION – REINFORCED COLUMN AND REINFORCED WALL STONES

1. SET COLUMN CORE REINFORCING STEEL AS SHOWN.
2. SET FASCIA STONES IN MORTAR TO THE SAME PATTERN AND CONFIGURATION AS THE EXITING CONDITIONS USING NUMBERED STONES.
3. THE FACE OF THE COLUMN OR WALL NEED NOT BE PERFECTLY SMOOTH. THE EXISTING VARIATIONS IN SURFACE CONTOURS SHALL BE REPLICATED.
4. IF FASCIA STONES IMPEDE IN THE MINIMUM AREA OF THE CONCRETE POUR SHOWN, CUT REAR FACE OF STONE TO PRODUCE THE MINIMUM CONCRETE CORE DIMENSIONS. IT IS NOT NECESSARY TO HAVE THE STONES FILL THE ENTIRE AREA UP TO THE CONCRETE CORE. THE AREA OUTSIDE THE CONCRETE CORE CAN BE FILLED WITH CONCRETE.
5. ONCE MORTAR HAS SET AND GAINED STRENGTH, THE CORE CONCRETE CAN BE PLACED DIRECTLY AGAINST THE FASCIA STONES. MULTIPLE LIFTS OF CONCRETE CAN BE USED.
6. CAP STONES CAN BE PLACED USING STANDARD MORTAR METHODS. THE PATTERN AND SHAPE OF THE CAP STONES SHALL MATCH THE EXISTING USING NUMBERED STONES.

METHOD OF CONSTRUCTION – CAP STONES AND STONE WALLS

1. PLACE STONES USING MORTAR AND STANDARD MASONRY TECHNIQUES.
2. THE LAYOUT SHALL BE SIMILAR TO THE EXISTING STRUCTURE (SIZE AND TYPE OF STONE, HEIGHT OF CAPS, AND VARIATION IN STONE SURFACES).
3. PLACE MORTAR IN THE JOINTS USING POINTING TOOLS.
4. CLEAN STONE SURFACES WHEN COMPLETE.

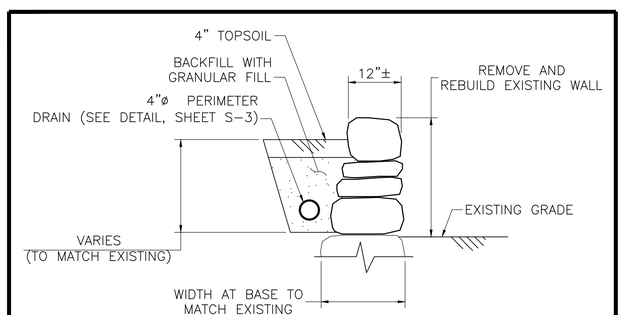

D — SECTION AT PERIMETER WALL
SCALE: ¾" = 1'-0"

SUPPLEMENTAL BID NUMBER ONE

CME ASSOCIATES, INC.
33 Wilbur Cross Way, Mansfield, CT 06268
101 East River Drive, East Hartford, CT 06108
888-291-3227 | www.cmeengineering.com
CME

EVELYN COLE SMITH ARCHITECTS, LLC
PO Box 182
134 Main St
Putnam, CT
06260
860 315 9570
www.ecsarchitects.com

GILLETTE CASTLE CANOPY STRUCTURAL DRAWINGS
PREPARED FOR
CONNECTICUT DEPARTMENT OF ENERGY & ENVIRONMENTAL PROTECTION
67 RIVER ROAD
EAST HADDAM, CONNECTICUT

DATE: 4/24/2018
PROJECT: #2017036

REVISIONS			
NO.	DATE	DESCRIPTION	BY

JOB DATA	
PROJECT	2017036.100
BOOK NO.	
DESIGNED	EMC
DRAWN	EMC
CHECKED	MPC
COGO FILE	
FILE	

S-2

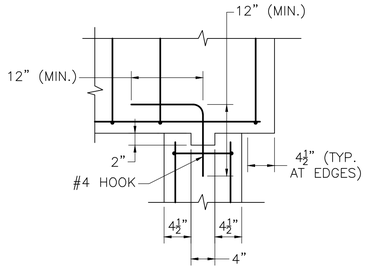

SHEAR KEY DETAIL

SCALE: 1" = 1'–0"

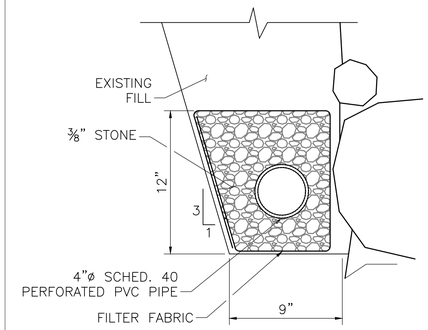

PERIMETER DRAIN DETAIL

SCALE: 2" = 1'–0"

SUPPLEMENTAL BID NUMBER ONE

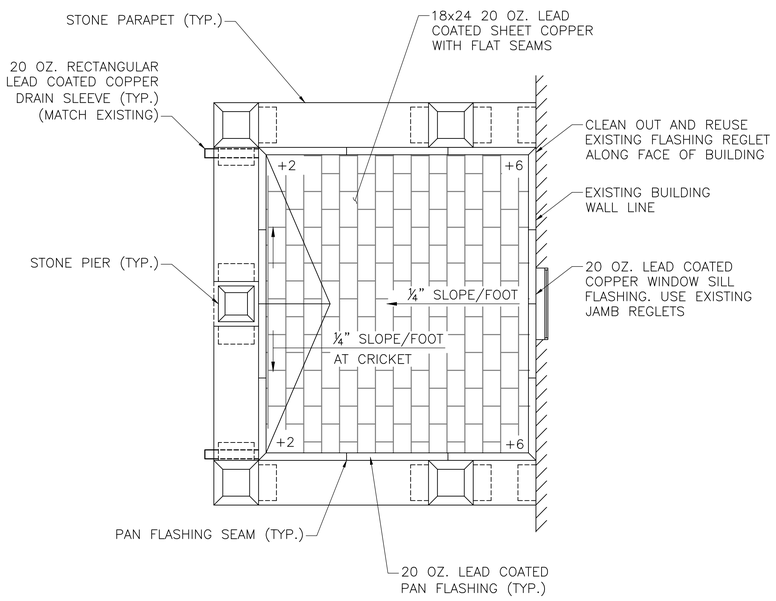

CANOPY ROOF PLAN

SCALE: ¼" = 1'–0"

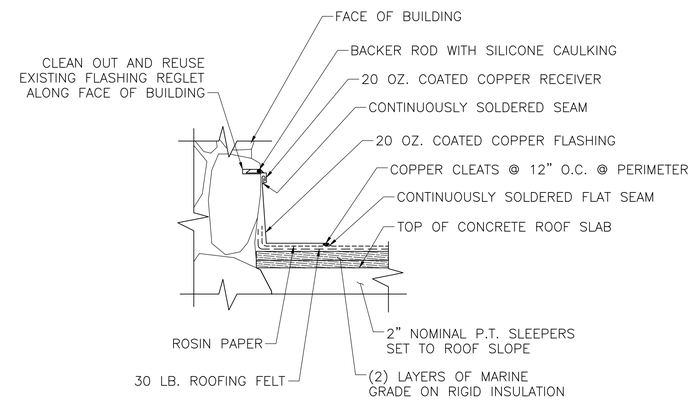

REGLET AND FLASHING AT FACE OF BUILDING

NOT TO SCALE

QUALITY CONTROL CERTIFICATION		
GROUP	REVIEWED	DATE
PROJECT MANAGER		
SURVEY		
ENVIRONMENTAL		
CIVIL		
STRUCTURAL		
ARCHITECTURAL		

CME ASSOCIATES, INC.
33 Wilbur Cross Way, Mansfield, CT 06268
101 East River Drive, East Hartford, CT 06108
888-291-3227 | www.cmeengineering.com

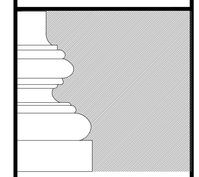

EVELYN COLE SMITH ARCHITECTS, LLC
PO Box 182
134 Main St
Putnam, CT
06260
860 315 9570
www.ecsarchitects.com

GILLETTE CASTLE CANOPY STRUCTURAL DRAWINGS
PREPARED FOR
CONNECTICUT DEPARTMENT OF ENERGY & ENVIRONMENTAL PROTECTION
67 RIVER ROAD
EAST HADDAM, CONNECTICUT

DATE: 4/24/2018
PROJECT: #2017036

REVISIONS		
NO.	DATE	DESCRIPTION	By

JOB DATA	
PROJECT	2017036.100
BOOK NO.	
DESIGNED	EMC
DRAWN	EMC
CHECKED	MPC
COGO FILE	
FILE	

S-3