NOTES:

1. CONTRACTOR SHALL INSULATE BEHIND SENSORS.
2. REFER TO DRAWING NO. P-012 FOR WALL SLEEVE DETAILS.
3. THE FOLLOWING TYPES OF SURFACE MOUNTED CONDUIT SHALL BE INSTALLED IN THE BAY AREAS: RMC BELOW 10'-0" AFF, EMT ABOVE 10'-0". REFER TO CSI SECTION 260533 FOR ADDITIONAL INFORMATION.
4. REFER TO ELECTRICAL DRAWINGS FOR PADDLE FAN SPEED CONTROLLER LOCATIONS.
5. CONTRACTOR SHALL COORDINATE THE INSTALLATION OF HVAC EQUIPMENT AND PIPING WITH CRANE SYSTEM AND STORAGE CRIB.

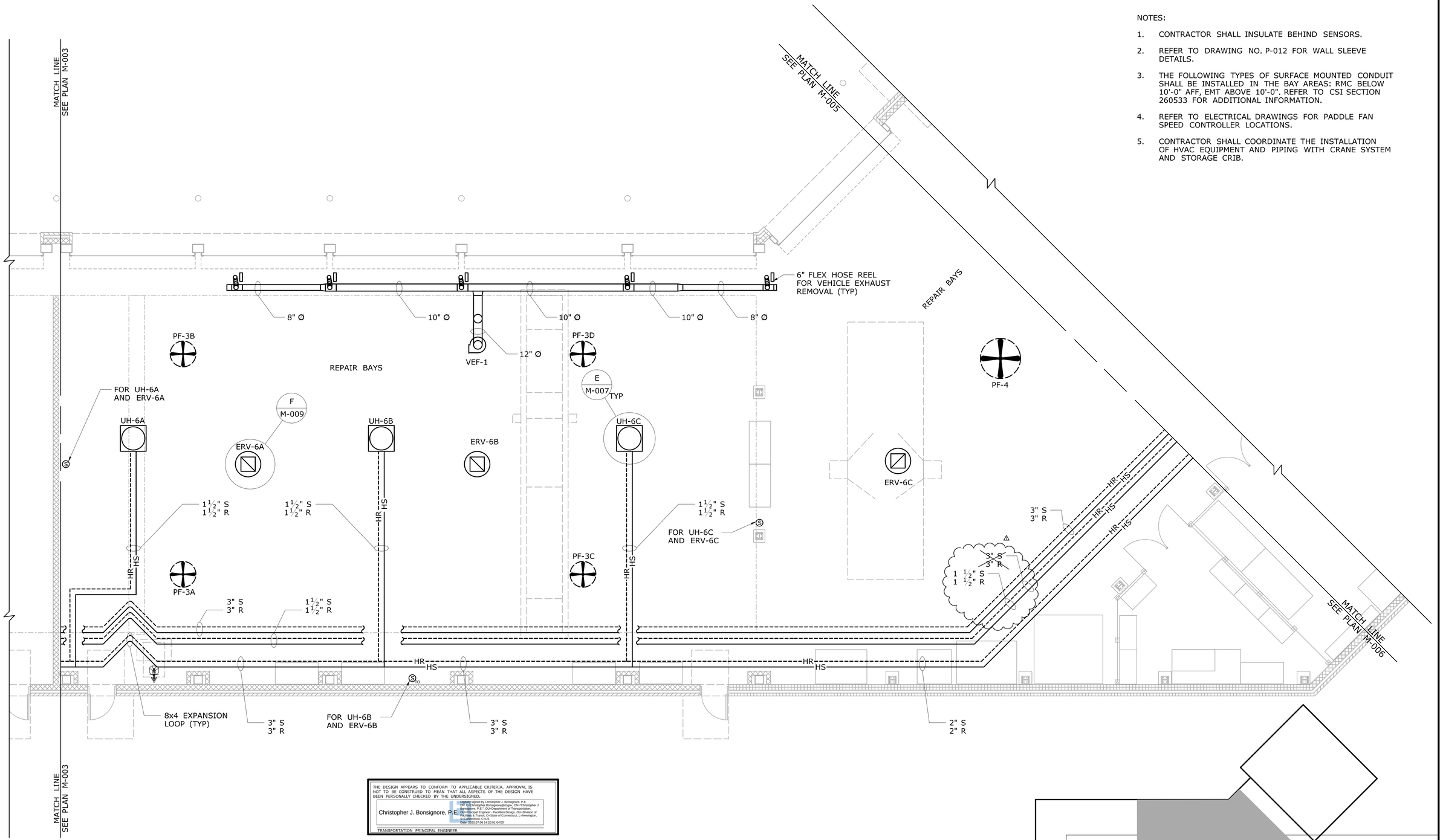

THE DESIGN APPEARS TO CONFORM TO APPLICABLE CRITERIA. APPROVAL IS NOT TO BE CONSTRUED TO MEAN THAT ALL ASPECTS OF THE DESIGN HAVE BEEN PERSONALLY CHECKED BY THE UNDERSIGNED.

Christopher J. Bonsignore, P.E.

Digitally signed by Christopher J. Bonsignore, P.E.
DN: cn=Christopher.Bonsignore@ct.gov, CN=*Christopher J. Bonsignore, P.E.*, OU=Department of Transportation, OU=Principal Engineer - Facilities Design, OU=Division of Facilities Design, O=State of Connecticut, L=Newington, S=Connecticut, C=US
Date: 2020.07.06 14:20:01-04'00'

TRANSPORTATION PRINCIPAL ENGINEER

ADDENDUM NO. 2

REV.	DATE	REVISION DESCRIPTION	SHEET NO.
1	7/1/20	NOTE REVISION	10.04.A2

THE INFORMATION, INCLUDING ESTIMATED QUANTITIES OF WORK, SHOWN ON THESE SHEETS IS BASED ON LIMITED INVESTIGATIONS BY THE STATE AND IS IN NO WAY WARRANTED TO INDICATE THE CONDITIONS OF ACTUAL QUANTITIES OF WORK WHICH WILL BE REQUIRED.

Plotted Date: 7/2/2020

DESIGNER/DRAFTER: EAM

CHECKED BY: JAB

SCALE: 3/16" = 1'- 0"

STATE OF CONNECTICUT
DEPARTMENT OF TRANSPORTATION

Filename: ...\FD_MST_MEC_0034_0350_M004_A2.dgn

SIGNATURE/ BLOCK: OFFICE OF ENGINEERING

APPROVED BY:

PROJECT TITLE: CONSTRUCTION OF A NEW BROOKFIELD REPAIR FACILITY

TOWN: BROOKFIELD

DRAWING TITLE: BAY AREA MECHANICAL PLAN 2

PROJECT NO. 0034-0350

DRAWING NO. M-004

SHEET NO. 10.04.A2

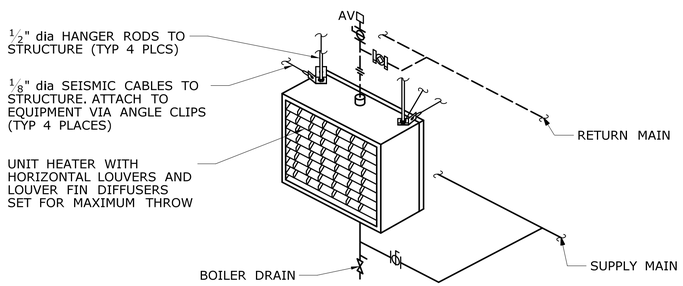

NOTE:

1. PROVIDE OSHA FAN GUARD

TYPICAL
HORIZONTAL UNIT HEATER PIPING DETAIL A M-003 A M-004 A M-005

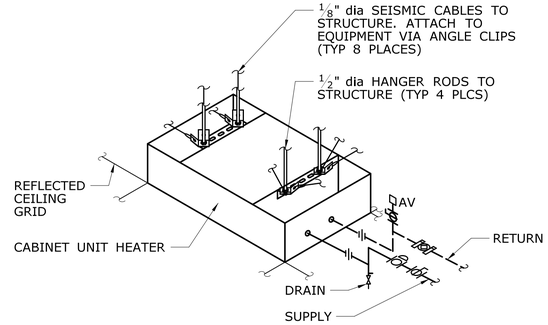

TYPICAL
CABINET UNIT HEATER PIPING DETAIL B M-005

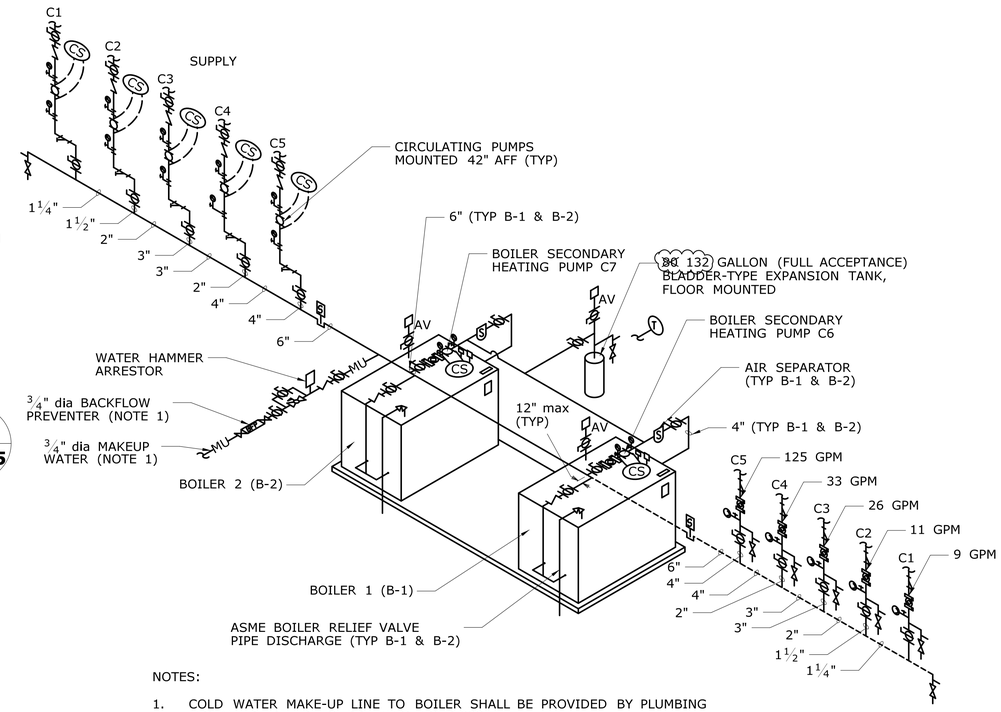

NOTES:

1. COLD WATER MAKE-UP LINE TO BOILER SHALL BE PROVIDED BY PLUMBING INSTALLER. REFER TO DRAWING NO. P-003.
2. INSTALL AUTOMATIC AIR VENTS IN ACCORDANCE WITH SPECIFICATIONS.

HYDRONIC PIPING DIAGRAM

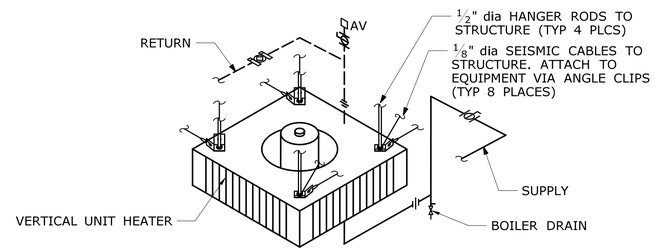

NOTE:

1. PROVIDE OSHA FAN GUARD

VERTICAL UNIT HEATER PIPING DETAIL E M-003 E M-004

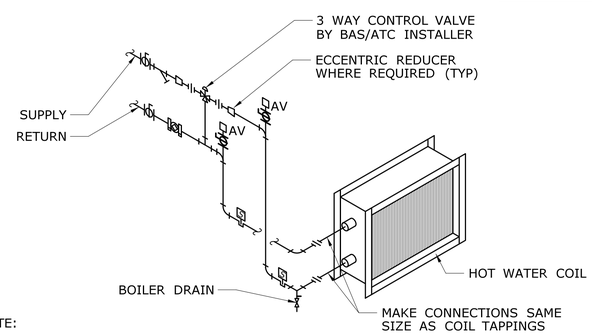

NOTE:

1. CONNECTIONS TO COIL INLET AND OUTLET SHALL BE FULL SIZE OF COIL TAPPINGS AND SHALL BE PROVIDED WITH UNIONS OR FLANGES TO FACILITATE COIL REMOVALS AND CONNECTIONS TO ADDED COILS.
2. MAKE BRANCH PIPING CONNECTIONS TO COIL HEADERS TO ACHIEVE AIR-WATER COUNTERFLOW. PLUG COIL HEADER TAPPINGS WITH NO CONNECTIONS.
3. REFER TO SPECIFICATION SECTION 230993, "SEQUENCE OF OPERATIONS" FOR ADDITIONAL INFORMATION.

DUCT MOUNTED HOT WATER COIL (HWC) PIPING DETAIL

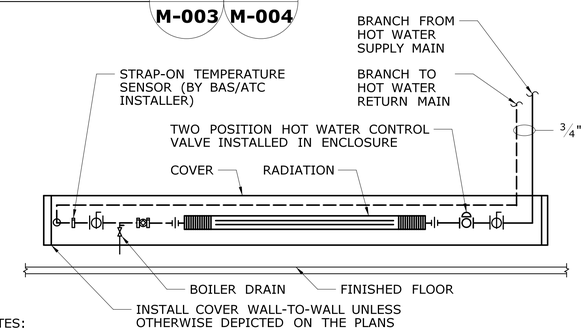

NOTES:

1. GC TO COORDINATE THE INSTALLATION OF THE FINNED TUBE RADIATION WITH THE INSTALLATION OF THE FINISHED FLOOR TO PREVENT DAMAGE TO THE EXPOSED PIPING, FINS, PIPING SPECIALTIES, AND ENCLOSURE (INCLUDING BACK PANEL). DAMAGED WORK DEEMED TO BE UNACCEPTABLE TO THE ENGINEER SHALL BE REMOVED AND REPLACED.
2. GC TO COORDINATE THE INSTALLATION OF THE FINNED TUBE RADIATION WITH THE INSTALLATION OF TERRAZZO BASE. REFER TO DRAWING NO. A-504 FOR DETAIL.
3. PROVIDE AIR VENTS WITH BALL VALVE AT HIGH POINTS IN PIPING.

TYPICAL
FIN TUBE RADIATION PIPING DETAIL C M-005

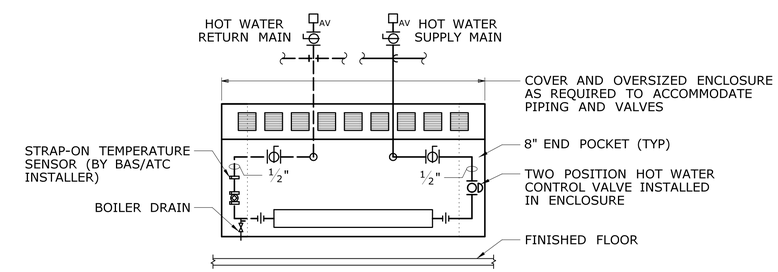

NOTES:

1. GC TO COORDINATE THE INSTALLATION OF THE CONVECTORS WITH THE INSTALLATION OF THE FINISHED FLOOR TO PREVENT DAMAGE TO THE EXPOSED PIPING, HEATING ELEMENT, PIPING SPECIALTIES, AND ENCLOSURE (INCLUDING BACK PANEL). DAMAGED WORK DEEMED TO BE UNACCEPTABLE TO THE ENGINEER SHALL BE REMOVED AND REPLACED.
2. GC TO COORDINATE THE INSTALLATION OF THE CONVECTORS WITH THE INSTALLATION OF TERRAZZO BASE. REFER TO DRAWING NO. A-504 FOR DETAIL.
3. PROVIDE AIR VENTS WITH BALL VALVE AT HIGH POINTS IN PIPING.

TYPICAL CONVECTOR PIPING DETAIL D M-005

ADDENDUM NO. 2

REV.	DATE	REVISION DESCRIPTION	SHEET NO.
1	7/1/20	TANK SIZE CLARIFICATION	10.08.A2

THE INFORMATION, INCLUDING ESTIMATED QUANTITIES OF WORK, SHOWN ON THESE SHEETS IS BASED ON LIMITED INVESTIGATIONS BY THE STATE AND IS IN NO WAY WARRANTED TO INDICATE THE CONDITIONS OF ACTUAL QUANTITIES OF WORK WHICH WILL BE REQUIRED.

Plotted Date: 7/2/2020

DESIGNER/DRAFTER: EAM
CHECKED BY: JAB
NOT TO SCALE

STATE OF CONNECTICUT
DEPARTMENT OF TRANSPORTATION

Filename: ...\FD_MST_MEC_0034_0350_M008_A2.dgn

SIGNATURE/BLOCK: OFFICE OF ENGINEERING
APPROVED BY:

PROJECT TITLE: CONSTRUCTION OF A NEW BROOKFIELD REPAIR FACILITY

TOWN: BROOKFIELD
DRAWING TITLE: TYPICAL MECHANICAL PIPING DETAILS

PROJECT NO. 0034-0350
DRAWING NO. M-008
SHEET NO. 10.08.A2

ELECTRIC UNIT HEATER SCHEDULE

MARK	TYPE & MODEL NO.	MBH	kW	CFM	RPM	THROW	MOUNTING HGT	MOTOR
EUH-1	HORIZONTAL - UHEC-052AACA	17.1	5.0	400	1550	12'	9'	1/125HP, 208V, 3PH, 60Hz

NOTES:
1. BASED ON TRANE CO.
2. MOUNTING HEIGHT IS THE DISTANCE FROM THE FLOOR TO THE BOTTOM OF THE HEATER.
3. TEMPERATURES ARE IN DEGREES - FAHRENHEIT

ROOFTOP AIR CONDITIONER SCHEDULE

MARK	AREA SERVED	MODEL NO.	CFM	OA CFM	COOLING LOAD		EDB	EWB	LDB	LWB	ESP	EER	SEER	COMP MOTOR	IND FAN MOTOR	OUT FAN MOTOR	VOLT/PH/HZ
					SENSIBLE	LATENT											
AC-1	OFFICE	THC092F3R0A	3600	-	56.43	40.85	77.03	69.20	64.00	61.57	1.50	12.6	----	6.16 kW	1.36 kW	0.70 kW	208V, 3PH, 60HZ
AC-2	COMM. ROOM	CS-S9NKUA	230-395	0	8.5	-	-	-	-	-	-	13.1	21.0	-	-	-	208V, 1PH, 60HZ

NOTES:
1. AC-1 BASED ON TRANE CO. , AC-2 BASED ON PANASONIC
2. WITH ECONOMIZERS
3. TEMPERATURES IN DEGREES - FAHRENHEIT
4. AMBIENT TEMPERATURE = 90 DEGREES

FINNED TUBE RADIATION SCHEDULE

MARK	AREA SERVED	BTU PER FT @ 190° F AVG. WT. TEMP	TUBE SIZE	TUBE TYPE	FIN SPACING	FIN SIZE	COVER STYLE	ENCLOSURE HEIGHT	MOUNTING
R-3, R-4, R-5	OFFICE	900	1-1/4"	CU - AL	32 FINS/FT	$3\frac{1}{4}$" x $3\frac{1}{4}$"	FS5	14"	WALL
R-1, R-2	OFFICE	1480	1-1/4"	CU - AL	40 FINS/FT	$4\frac{1}{4}$" x $4\frac{1}{4}$"	FS5	14"	WALL

NOTE: BASED ON RITTLING

HYDRONIC COIL SCHEDULE

MARK	LOCATION	TYPE & MODEL NO.	FINS/FT	MBH	GPM	CFM	EAT	EWT	LAT	WTD	WPD	APD	FACE VELOCITY (FPM)
HWC-1	DUCT MOUNTED, AC-1	18"x28" TYPE 5W - 4 ROW	80	253.54	25.26	3600	56.0	200	120	20	0.88	0.83	1022

NOTES:
1. BASED ON TRANE CO.
2. TEMPERATURES ARE IN DEGREES - FAHRENHEIT

EXHAUST FAN SCHEDULE

MARK	AREA SERVED	TYPE & MODEL NO.	CFM	SP"	TIP SPEED	FAN RPM	MOTOR
ERV-1	MECHANICAL ROOM	ROOF MOUNTED 80C2B	510	.125	3241	1238	1/6HP, 120V, 1PH, 60HZ
ERV-2	SPRINKLER ROOM	ROOF MOUNTED 60C2B	171	.125	3484	1331	1/6HP, 120V, 1PH, 60HZ
ERV-3(A-B)	WELD SHOP	ROOF MOUNTED 135C2B	1416	.125	3541	1002	1/6HP, 120V, 1PH, 60HZ
ERV-4	LUBE/COMP. ROOM	ROOF MOUNTED 70C2B	298	.125	3926	1500	1/6HP, 120V, 1PH, 60HZ
ERV-5	WASH BAY	ROOF MOUNTED 150C2B	1608	.125	3298	840	1/6HP, 120V, 1PH, 60HZ
ERV-6(A-C)	REPAIR BAYS	ROOF MOUNTED 135C4B	2010	.125	4845	1371	1/6HP, 120V, 1PH, 60HZ
ERV-7(A-B)	STORES	ROOF MOUNTED 120CC2B	1240	.125	3879	1233	1/6HP, 120V, 1PH, 60HZ
ERV-8	OFFICE	ROOF MOUNTED 80C2B	679	.125	4112	1571	1/6HP, 120V, 1PH, 60HZ
EF-1	ELECTRICAL	WALL MOUNTED S1-8-426-D	190	.125	-	1550	1/80HP, 120V, 1PH, 60HZ
EF-2	OFFICE	ROOF MOUNTED CUBE-99	674	.500	-	1336	1/6HP, 120V, 1PH, 60HZ
VEF-1	REPAIR BAYS	ROOF MOUNTED CMB-25	3000	5.00	-	-	3HP, 208V, 3PH, 60HZ
VEF-2	WELD SHOP	ROOF MOUNTED CMB-10	500	4.50	-	-	1HP, 208V, 3PH, 60HZ

NOTES:
1. ERV'S BASED ON LOREN COOK
2. EF-1 BASED ON GREENHECK
3. VEF-1,2 BASED ON CAR-MON.

FINNED TUBE RADIATION SCHEDULE

MARK	AREA SERVED	BTU PER FT @ 190° F AVG. WT. TEMP	TUBE SIZE	TUBE TYPE	FIN SPACING	FIN SIZE	COVER STYLE	ENCLOSURE HEIGHT	MOUNTING
R-1, R-2, R-3	OFFICE	900	1-1/4"	CU - AL	32 FINS/FT	$3\frac{1}{4}$" x $3\frac{1}{4}$"	FS5	14"	WALL
R-4, R-5	OFFICE	1480	1-1/4"	CU - AL	40 FINS/FT	$4\frac{1}{4}$" x $4\frac{1}{4}$"	FS5	14"	WALL

NOTE: BASED ON RITTLING

RETURN GRILLE SCHEDULE

MARK	LOCATION	DIMENSION	CFM
RG1	REPAIR MEDIA ROOM	8x8	184
RG2	GARAGE SUPERVISOR	12x12	296
RG3, RG4	CONFERENCE ROOM	10x10	242
RG5, RG6	EQUIPMENT GEN. SUPER.	8x8	170
RG7, RG8	COORIDOR	6x6	28
RG9, RG10, RG11	BREAK ROOM	8x8	125
RG12	JANITORS ROOM	6x6	23
RG13	WOMEN'S ROOM	8x8	180
RG14	MEN'S ROOM	10x10	225
RE15	LOCKER ROOM	8x8	144
RG16, RG17	STORES F. SUP./MGMT STORES	8x8	143
RG18	REPAIR CREW LEADER	10x10	196
RG19	STORES SUP.	8x8	189

NOTES:
1. BASED ON TITUS.
2. DIMENSIONS ARE BASED ON CORE AREA.

DIFFUSER SCHEDULE

MARK	LOCATION	FACE	DIMENSION	MOUNTING	MODEL	CFM	PATTERN
D1	REPAIR MEDIA ROOM	SQ	9x9	FL	G2	204	2-W
D2	GARAGE SUPERVISOR	SQ	12X12	FL	G2	329	2-W
D3,D4	CONFERENCE ROOM	SQ	9x9	FL	A4	269	4-W
D5	EQUIPMENT GEN. SUPER.	SQ	12x12	FL	A4	378	4-W
D6,D7	COORIDOR	SQ	6x6	FL	S2	78	2-W
D8,D9	BREAK ROOM	SQ	9x9	FL	A4	209	4-W
D10	WOMEN'S ROOM	SQ	9x9	FL	A4	200	4-W
D11	MEN'S ROOM	SQ	9x9	FL	A4	250	4-W
D12	LOCKER ROOM	SQ	9x9	FL	A4	160	4-W
D13,D14	STORES F. SUP./MGMT STORES	SQ	9x9	FL	A4	159	4-W
D14	REPAIR CREW LEADER	SQ	9x9	FL	G2	218	2-W
D15	STORES SUPERVISOR	SQ	9x9	FL	G2	210	2-W

NOTES:
1. BASED ON TITUS.
2. DIMENSIONS ARE BASED ON NECK AREA

CONVECTOR/CABINET UNIT HEATER SCHEDULE

MARK	LOCATION	MODEL NO.	GPM	MBH	H x D x L	EWT	LWT	EAT	TYPE
C-1	STORES FIELD SUP.	SW-A	0.35	3.4	14" x 4" x 28"	200	180	65	SLOPETOP
C-2(A-B)	CORRIDOR	SW-A	0.71	6.9	14" x 4" x 52"	200	180	65	SLOPETOP
C-3	VESTIBULE	SW-A	0.35	3.4	14" x 4" x 28"	200	180	65	SLOPETOP
C-4	REPAIR CREW L.	SW-A	0.45	4.4	14" x 4" x 40"	200	180	65	SLOPETOP
C-5 (A-B)	STORES MGMT/SUP.	SW-A	0.60	5.8	14" x 4" x 44"	200	180	65	SLOPETOP
CUH-1	LOCKER ROOM	RC-1200	0.84	12.9	25" x $9\frac{1}{2}$" x 35"	200	180	65	CEILING
CUH-2	MEN'S ROOM	RC-1200	0.84	12.9	25" x $9\frac{1}{2}$" x 35"	200	180	65	CEILING
CUH-3	WOMEN'S ROOM	RC-1200	0.84	12.9	25" x $9\frac{1}{2}$" x 35"	200	180	65	CEILING

NOTES:
1. BASED ON VULCAN RADIATOR
2. TEMPERATURES ARE IN DEGREES - FAHRENHEIT
3. H x D x L DIMENSIONS DO NOT INCLUDE END POCKETS
4. CUH-1 & CUH-2 MOTOR: 1/15HP, 120V, 1PH, 60HZ

VARIABLE AIR VOLUME BOX SCHEDULE

MARK	MOUNTING LOCATION	AREA SERVED	REQUIRED CFM	ELECTRICAL	MODEL NO.	REMARKS
VAV-1	REPAIR MEDIA ROOM	REPAIR MEDIA ROOM	204	24 VAC	VCCF04	4" INLET
VAV-2	GARAGE SUPERVISOR	GARAGE SUPERVISOR	329	24 VAC	VCCF05	5" INLET
VAV-3	CONFERENCE ROOM	CONFERENCE ROOM	537	24 VAC	VCCF08	8" INLET
VAV-4	EQUIPMENT GENERAL SUPERVISOR	EQUIPMENT GEN. SUP.	378	24 VAC	VCCF06	6" INLET
VAV-5	COORIDOR	COORIDOR	156	24 VAC	VCCF04	4" INLET
VAV-6	BREAK ROOM	BREAK ROOM	418	24 VAC	VCCF06	6" INLET
VAV-7	WOMEN'S ROOM	WOMEN'S ROOM	200	24 VAC	VCCF04	4" INLET
VAV-8	MEN'S ROOM	MEN'S ROOM	250	24 VAC	VCCF05	5" INLET
VAV-9	LOCKER ROOM	LOCKER ROOM	160	24 VAC	VCCF04	4" INLET
VAV-10	STORES FIELD SUP./MGMT STORES	STORES SUP./MGMT STORES	317	24 VAC	VCCF05	5" INLET
VAV-11	REPAIR CREW LEADER	REPAIR CREW LEADER	218	24 VAC	VCCF04	4" INLET
VAV-12	STORES SUPERVISOR	STORES FIELD SUP.	210	24 VAC	VCCF04	4" INLET
BYPASS	CEILING PLENUM - BYPASS DUCT	-	2446	24 VAC	VADA-16x16	16"x16" INLET

NOTE: BASED ON VARITRAC DAMPERS BY TRANE CO.

UNIT HEATER SCHEDULE

MARK	TYPE & MODEL NO.	MBH	GPM	CFM	EWT	LWT	WPD	MOUNTING HGT	MOTOR
UH-1	HORIZONTAL - 096 - S	69.7	7.0	1400	200	180	0.29	11	1/12HP, 120V, 1PH, 60HZ
UH-2	HORIZONTAL - A18 - S	15.7	1.9	420	200	180	2.2	8	16 WATTS, 120V, 1PH, 60HZ
UH-3(A-B)	VERTICAL - 102 - P	63.7	13.13	1208	200	180	1.43	-	1/8HP, 120V, 1PH, 60HZ
UH-4	HORIZONTAL - 036 - S	26.1	2.7	550	200	180	0.09	9	25 WATTS, 120V, 1PH, 60HZ
UH-5	HORIZONTAL - 156 - S	113.0	11.3	2600	200	180	.43	13'	1/3HP, 120V, 1PH, 60HZ
UH-6(A-C)	VERTICAL - 102 - P	77.2	15.91	1528	200	180	2.06	-	1/8HP, 120V, 1PH, 60HZ
UH-7(A-B)	HORIZONTAL - 108 - S	78.4	7.9	1800	200	180	.36	11	1/12HP, 120V, 1PH, 60HZ
UH-8(A-8)	HORIZONTAL - 102 - P	113	11.3	2600	200	180	.53	13	1/3HP, 120V, 1PH, 60HZ

NOTES:
1. BASED ON TRANE CO.
2. MOUNTING HEIGHT IS THE DISTANCE FROM THE FLOOR TO THE BOTTOM OF THE HEATER
3. TEMPERATURES ARE IN DEGREES - FAHRENHEIT

ADDENDUM NO. 2

REV.	DATE	REVISION DESCRIPTION	SHEET NO.
1	7/1/20	FTR SCHEDULE REMOVED	10.12.A2

THE INFORMATION, INCLUDING ESTIMATED QUANTITIES OF WORK, SHOWN ON THESE SHEETS IS BASED ON LIMITED INVESTIGATIONS BY THE STATE AND IS IN NO WAY WARRANTED TO INDICATE THE CONDITIONS OF ACTUAL QUANTITIES OF WORK WHICH WILL BE REQUIRED.

Plotted Date: 7/2/2020

DESIGNER/DRAFTER: EAM
CHECKED BY: JAB
NOT TO SCALE

STATE OF CONNECTICUT
DEPARTMENT OF TRANSPORTATION

Filename: ...\FD_MST_MEC_0034_0350_M012_A2.dgn

SIGNATURE/BLOCK: OFFICE OF ENGINEERING
APPROVED BY:

PROJECT TITLE: CONSTRUCTION OF A NEW BROOKFIELD REPAIR FACILITY

TOWN: BROOKFIELD

DRAWING TITLE: MECHANICAL SCHEDULE 1

PROJECT NO. 0034-0350
DRAWING NO. M-012
SHEET NO. 10.12.A2