06 - STRUCTURAL
COVER SHEET

DRAWING NUMBER	DRAWING TITLE	DRAWING NUMBER	DRAWING TITLE
STI-001	STRUCTURAL INDEX OF DRAWINGS		
S-001	FOUNDATION NOTES AND ABBREVIATIONS		
S-001A	GENERAL NOTES, ABBREVIATIONS AND SCOPE OF WORK		
S-002	FOUNDATION DESIGN LOADING PLAN		
S-010	FOUNDATION PLAN - PARKING GARAGE		
S-011	ENLARGED ELEVATOR PIT FOUNDATION PLAN		
S-012	SLAB PLAN - PARKING GARAGE		
S-013	FOUNDATION PLAN - PEDESTRIAN BRIDGE		
S-014	SECTIONS AND DETAILS		
S-101	GROUND FLOOR PLAN		
S-102	SECOND FLOOR FRAMING PLAN		
S-103	THIRD, FOURTH, FIFTH, SIXTH, SEVENTH FLOOR FRAMING PLAN		
S-105	EIGHTH FLOOR PLAN		
S-106	PEDESTRIAN BRIDGE PLAN AND SECTIONS		
S-107	EXISTING STATION RENOVATION PLAN		
S-301	SECTION AND DETAILS		
S-302	FAÇADE DETAILS		

DRAFT - NOT FOR BID OR CONSTRUCTION

BASE TECHNICAL CONCEPT PLANS

THIS IS A PROGRESS DRAWING AND IS NOT INTENDED TO BE RELIED UPON BY ANY PARTY AS INDICATING A FINAL DESIGN OR TO BE INTENDED FOR BIDDING OR CONSTRUCTION PURPOSES. THIS PROGRESS DRAWING IS PROVIDED SOLELY FOR INFORMATION WITHOUT REPRESENTATION OR WARRANTY OF ANY KIND. THIS PROGRESS DRAWING HAS NOT BEEN SUBJECT TO A FORMAL QUALITY CONTROL CHECKING PROCESS.

REV.	DATE	REVISION DESCRIPTION	SHEET NO.
-	-	-	-
-	-	-	-
-	-	-	-
-	-	-	-
-	-	-	-
-	-	-	-

THE INFORMATION, INCLUDING ESTIMATED QUANTITIES OF WORK, SHOWN ON THESE SHEETS IS BASED ON LIMITED INVESTIGATIONS BY THE STATE AND IS IN NO WAY WARRANTED TO INDICATE THE CONDITIONS OF ACTUAL QUANTITIES OF WORK WHICH WILL BE REQUIRED.

Plotted Date: 4/13/2020

DESIGNER/DRAFTER: **PRP**

CHECKED BY: **JP**

SCALE AS NOTED

STATE OF CONNECTICUT
DEPARTMENT OF TRANSPORTATION

Filename: ...\FD_MSH_STR_0301_0047_S-001.dgn

SIGNATURE/ BLOCK:

CHA
200 Corporate Place, Suite 110
Rocky Hill, CT 06067
860.257.4557 - www.chacompanies.com

PROJECT TITLE: **STAMFORD PARKING GARAGE**

TOWN: **STAMFORD**

DRAWING TITLE: **STRUCTURAL INDEX OF DRAWINGS**

PROJECT NO. **301-0047**

DRAWING NO. **STI-001**

SHEET NO.

GENERAL NOTES:

1. THE GOVERNING BUILDING CODE FOR THE DESIGN IS 2018 CONNECTICUT STATE BUILDING CODE BASED ON 2015 INTERNATIONAL BUILDING CODE (IBC) WITH CONNECTICUT AMENDMENTS.

2. CONTRACTOR SHALL FIELD VERIFY EXISTING SITE CONDITIONS AND REPORT, IN WRITING, ANY DISCREPANCIES TO THE ENGINEER PRIOR TO COMMENCING WORK.

3. ALL DIMENSIONS TO, OF, AND IN THE EXISTING STRUCTURES SHALL BE VERIFIED IN FIELD BY THE CONTRACTOR. ANY DISCREPANCY SHOWN OR IMPLIED ON THE DRAWINGS, WITH REGARDS TO FIELD DIMENSIONS SHALL BE BROUGHT TO THE ATTENTION OF THE ENGINEER BEFORE PROCEEDING WITH THE AFFECTED PORTION OF THE WORK.

4. THE CONTRACTOR SHALL FIELD DETERMINE EXACT LOCATION OF ALL EXISTING UTILITIES BOTH UNDERGROUND AND ABOVE GROUND BEFORE COMMENCING WORK. THE CONTRACTOR SHALL BE RESPONSIBLE FOR ANY AND ALL DAMAGES TO EXISTING UTILITIES OR OTHER STRUCTURES IN THE VICINITY OF NEW CONSTRUCTION WHICH MIGHT BE OCCASIONED BY THE CONTRACTOR'S FAILURE TO LOCATE AND PRESERVE EXISTING UTILITIES OR STRUCTURES. REROUTE UTILITIES WHERE CALLED OUT ON THE DRAWINGS.

5. CONTRACTOR SHALL BE RESPONSIBLE FOR THE DESIGN OF TEMPORARY AND PERMANENT SHEETING AND SHORING SYSTEMS TO ADEQUATELY SUPPORT EXISTING STRUCTURES AND APPURTENANCES. THE DESIGN(S) ARE TO BE SIGNED AND SEALED BY A LICENSED PROFESSIONAL ENGINEER REGISTERED IN THE STATE OF CONNECTICUT AND SUBMITTED TO THE ENGINEER FOR RECORD. INDICATE EXTENTS OF KNOWN SHEETING AND SHORING ON DRAWINGS.

6. COORDINATE WITH GEOTECHNICAL ENGINEER AND INDICATE EXTENTS OF UNDERPINNING WHERE REQUIRED ON DRAWINGS. DELETE NOTE IF UNDERPINNING IS NOT REQUIRED.

7. SECTIONS/DETAILS APPLY TO SIMILAR LOCATIONS AND CONDITIONS UNLESS OTHERWISE INDICATED.

8. REFER TO RESPECTIVE DISCIPLINES' DRAWINGS FOR ADDITIONAL PROJECT REQUIREMENTS. INDICATE SPECIFIC ITEMS AND DISCIPLINE IF REQUIRED.

9. REFER TO THE ARCHITECTURAL, MECHANICAL, PLUMBING, FIRE PROTECTION, AND ELECTRICAL DRAWINGS FOR LOCATION AND SIZE OF CHASES, INSERTS, OPENINGS, SLEEVES, WASHES, DRIPS, REVEALS, DEPRESSIONS AND OTHER PROJECT REQUIREMENTS. INDICATE SPECIFIC ITEMS AND DISCIPLINE IF REQUIRED.

10. COORDINATE LOCATION AND SIZE OF EQUIPMENT PADS WITH MECHANICAL, PLUMBING, FIRE PROTECTION, AND ELECTRICAL (RESPECTIVE) CONTRACTORS AND MANUFACTURERS.

11. DURING CONSTRUCTION, THE CONTRACTOR SHALL FOLLOW ALL OSHA REQUIREMENTS FOR CONSTRUCTION SAFETY INCLUDING OSHA SAFETY PROCEDURES REGARDING INSTALLATION AND INSPECTION OF DRILLED SHAFTS.

12. FOR GROUNDING REQUIREMENTS AND DETAILS, REFER TO ELECTRICAL DRAWINGS.

FOUNDATION NOTES:

1. THE PRELIMINARY FOUNDATION BASIS OF DESIGN IS SHOWN ON DRAWING S-010.

2. INSTALL AND PERFORM LOAD TESTING ON A MINIMUM OF TWO (2) TRIAL DRILLED SHAFTS.

3. PROVIDE ACCESS TUBES FOR CROSS HOLE INTEGRITY TESTING AND PERFORM CROSS HOLE INTEGRITY TESTING ON ALL TRIAL AND PRODUCTION DRILLED SHAFTS.

4. PROVIDE POSITIVE DRAINAGE FOR ALL TRENCHES DURING CONSTRUCTION. DO NOT ALLOW ANY PONDING OF WATER DURING CONSTRUCTION.

5. DO NOT PLACE FOUNDATIONS IN WATER OR ON FROZEN GROUND. DO NOT ALLOW GROUND BENEATH FOOTINGS TO FREEZE.

FOUNDATION AND SLAB-ON-GRADE CAST-IN-PLACE CONCRETE NOTES:

1. ALL CONCRETE WORK SHALL BE IN CONFORMANCE WITH THE ACI 318-14 ('BUILDING CODE REQUIREMENTS FOR STRUCTURAL CONCRETE') AND ACI 301-16 ('SPECIFICATIONS FOR STRUCTURAL CONCRETE').

2. PLACEMENT OF CONCRETE SHALL BE IN CONFORMANCE WITH ACI 117-10 ('SPECIFICATION FOR TOLERANCES FOR CONCRETE CONSTRUCTION AND MATERIALS').

3. CONCRETE FOR DRILLED SHAFTS SHALL BE NORMAL WEIGHT CONCRETE WITH COMPRESSIVE STRENGTH AT 28 DAYS, f'c OF 4,000 PSI. THE WATER/CEMENTITIOUS RATIO FOR MIX DESIGN SHALL NOT EXCEED 0.45. THE DRILLED SHAFT CONCRETE SHALL BE AIR ENTRAINED WITH TARGET AIR CONTENT FOR THE MIX DESIGN SET AT 6.5% AIR. THE AIR CONTENT SHALL BE 6.5% ± 2.0 BY VOLUME AT THE TIME OF ACCEPTANCE. THE CONCRETE TEMPERATURE SHALL BE CONTROLLED BY ONE OF THE PRE-COOLING METHODS DESCRIBED IN ACI 207.4R - 2012 ('COOLING AND INSULATING SYSTEMS FOR MASS CONCRETE') AND AS APPROVED BY THE ENGINEER. THE TEMPERATURE OF THE CONCRETE AT THE TIME OF PLACEMENT SHALL NOT EXCEED 80° F.

4. CONCRETE FOR PILE CAPS AND SPREAD FOOTINGS SHALL BE NORMAL WEIGHT CONCRETE WITH COMPRESSIVE STRENGTH AT 28 DAYS, f'c OF 4,500 PSI. THE WATER/CEMENTITIOUS RATIO FOR MIX DESIGN SHALL NOT EXCEED 0.40. THE CONCRETE SHALL BE AIR ENTRAINED WITH AIR CONTENT OF 6% ± 1.5 BY VOLUME AT THE TIME OF ACCEPTANCE. THE CONCRETE TEMPERATURE SHALL BE CONTROLLED BY ONE OF THE PRE-COOLING METHODS DESCRIBED IN ACI 207.4R - 2012 ('COOLING AND INSULATING SYSTEMS FOR MASS CONCRETE') AND AS APPROVED BY THE ENGINEER. THE TEMPERATURE OF THE CONCRETE AT THE TIME OF PLACEMENT SHALL NOT EXCEED 95° F. THE MAXIMUM TEMPERATURE IN CONCRETE AFTER PLACEMENT SHALL NOT EXCEED 160°F. THE MAXIMUM TEMPERATURE DIFFERENCE BETWEEN CENTER AND SURFACE OF PLACEMENT SHALL NOT EXCEED 35° F. UNLESS OTHERWISE INDICATED, THE CONTRACTOR SHALL SUBMIT A THERMAL CONTROL PLAN FOR EACH MASS CONCRETE PLACEMENT IN ACCORDANCE WITH THE REQUIREMENTS OF SECTION 8 OF ACI 301-16.

4. CONCRETE FOR GRADE BEAMS AND CAST-IN-PLACE FOUNDATION WALLS SHOWN ON THE DRAWINGS SHALL BE NORMAL WEIGHT CONCRETE WITH COMPRESSIVE STRENGTH AT 28 DAYS, f'c OF 4,500 PSI. THE WATER/CEMENTITIOUS RATIO FOR MIX DESIGN SHALL NOT EXCEED 0.40. THE CONCRETE SHALL BE AIR ENTRAINED WITH AIR CONTENT OF 6% ± 1.5 BY VOLUME AT THE TIME OF ACCEPTANCE.

5. CONCRETE FOR SLABS-ON-GRADE SHALL BE NORMAL WEIGHT CONCRETE WITH COMPRESSIVE STRENGTH AT 28 DAYS, f'c OF 4,500 PSI. THE WATER/CEMENTITIOUS RATIO FOR MIX DESIGN SHALL NOT EXCEED 0.40. THE CONCRETE SHALL BE AIR ENTRAINED WITH AIR CONTENT OF 6% ± 1.5 BY VOLUME AT THE TIME OF ACCEPTANCE.

6. THE SLUMP OF THE CONCRETE SHALL BE MEASURED IN ACCORDANCE WITH ASTM C143 AND SHALL BE BETWEEN 4" TO 5" AT THE TIME OF ACCEPTANCE.

7. CURING CONCRETE: CONCRETE SHALL BE MAINTAINED AT A TEMPERATURE OF AT LEAST 50° F AND IN A MOIST CONDITION FOR AT LEAST THE FIRST 7 DAYS AFTER PLACEMENT, EXCEPT IF ACCELERATED CURING IS USED.

8. IN COLD WEATHER (LESS THAN 40° F), FOLLOW CONCRETING IN COLD WEATHER PROCEDURES.

9. IF THE AMBIENT TEMPERATURE IS GREATER THAN 90° F WITH IN 24 HOURS AFTER CONCRETE PLACEMENT, HOT WEATHER CONCRETE PROCEDURES SHALL BE USED.

10. THE PORTLAND CEMENT SHALL BE: ASTM C150 TYPE I OR II, AIR ENTRAINING ADMIXTURE: ASTM C260, HIGH RANGE WATER REDUCING ADMIXTURES CONFORMING TO ASTM C494 TYPE F OR G PERMITTED, COARSE AGGREGATE: CRUSHED STONE, FINE AGGREGATE: SAND. AGGREGATES SHALL BE NORMAL WEIGHT AGGREGATES CONFORMING TO ASTM C33.

11. SUBMIT EACH CONCRETE MIX DESIGN FOR ENGINEER'S REVIEW.

12. FIVE (5) 4" x 8" CONCRETE CYLINDERS SHALL BE MADE FOR EVERY 50 CUBIC YARDS OR EACH DAY'S POUR, ONE (1) TO BE TESTED AT 7 DAYS, THREE (3) AT 28 DAYS AND ONE (1) TO HOLD. THE CONCRETE SLUMP, TEMPERATURE, AND AIR CONTENT SHALL BE MEASURED EVERY TIME A SET OF FIVE CYLINDERS IS MADE. FIELD-CURED CYLINDERS SHALL BE CURED IN ACCORDANCE WITH THE FIELD CURING PROCEDURE OF ASTM C31 AND TESTED IN ACCORDANCE WITH ASTM C39.

13. ALL REINFORCING STEEL SHALL BE EPOXY-COATED IN ACCORDANCE WITH ASTM A775, DEFORMED BILLET STEEL CONFORMING TO ASTM A615, GRADE 60 UNLESS NOTED.

14. ALL REINFORCING STEEL BENDS, HOOKS, LAP SPLICES AND MINIMUM COVER SHALL CONFORM TO ACI 318-14 UNLESS OTHERWISE INDICATED ON PLANS IS CONSERVATIVE THAN SPECIFIED IN ACI 318. ALL LAP SPLICES SHALL BE CLASS 'B' TENSION LAP SPLICES UNLESS NOTED. SPLICES WHERE REQUIRED SHALL BE STAGGERED. MECHANICAL COUPLERS, IF USED IN LIEU OF LAP SPLICES SHALL BE APPROVED BY THE ENGINEER.

15. ALL DETAILS OF REINFORCING STEEL FABRICATION AND PLACEMENT SHALL CONFORM TO ACI 315 ('DETAILS AND DETAILING FOR CONCRETE PLACEMENT') AND ACI 315r ('MANUAL OF ENGINEERING AND PLACING DRAWINGS FOR REINFORCED CONCRETE STRUCTURES') UNLESS OTHERWISE INDICATED. ALL REINFORCING STEEL SHALL BE SUPPORTED AND SECURED AGAINST DISPLACEMENT IN ACCORDANCE WITH THE CONCRETE REINFORCING STEEL INSTITUTE'S 'MANUAL OF STANDARD PRACTICE'.

16. NO WELDING OF REINFORCING STEEL SHALL BE PERMITTED.

17. SUBMIT REBAR SHOP DRAWINGS FOR ENGINEER'S REVIEW.

STRUCTURAL ABBREVIATIONS

@	AT
AB	ANCHOR BOLT
ADDL	ADDITIONAL
ADJ	ADJACENT
AFF	ABOVE FINISHED FLOOR
AHR	ANCHOR
ALT	ALTERNATE
APPROX	APPROXIMATE
ARCH	ARCHITECT
B/B	BACK TO BACK
BEV	BEVEL
BLDG	BUILDING
BLKG	BLOCKING
BO	BOTTOM OF
BOS	BOTTOM OF STEEL
BOT	BOTTOM
BP	BASE PLATE
BRDG	BRIDGING
BRG	BEARING
BSMT	BASEMENT
CANTL	CANTILEVER
CFMF	COLD-FORMED METAL FRAMING
CHFR	CHAMFER
CJ	CONTROL JOINT
CL	CENTER LINE
CLR	CLEAR
CMU	CONCRETE MASONRY UNIT
CO	CLEAN OUT
COL	COLUMN
CONC	CONCRETE
CONST JT	CONSTRUCTION JOINT
CONT	CONTINUOUS
COORD	COORDINATE
CSK	COUNTER SUNK
CU FT	CUBIC FEET
CU YD	CUBIC YARD
CWR	CONCRETE WALL REMOVAL
DBL	DOUBLE
DEMO	DEMOLITION
DIA	DIAMETER
DIM	DIMENSION
DL	DEAD LOAD
DN	DOWN
DWG	DRAWING
EA	EACH
EE	EACH END
EF	EACH FACE
EJ	EXPANSION JOINT
EL	ELEVATION
ELEC	ELECTRICAL
EOD	EDGE OF DECK
EOS	EDGE OF SLAB
EQ	EQUAL
EQUIP	EQUIPMENT
EW	EACH WAY
EXP	EXPANSION
EXST	EXISTING
EXT	EXTERIOR
FAB	FABRICATE
FBO	FURNISHED BY OTHERS
FD	FLOOR DRAIN
FDTN	FOUNDATION
FLR	FLOOR
FOM	FACE OF MASONRY
FRMG	FRAMING
FS	FOOTING STEP
FT	FOOT
FTG	FOOTING
FW	FIRE WALL
GA	GAGE
GALV	GALVANIZED
GC	GENERAL CONTRACTOR
GDR	GUARD RAIL
GR BM	GRADE BEAM
HNDRL	HANDRAIL
HORIZ	HORIZONTAL
HP	HIGH POINT
IN	INCHES
INFO	INFORMATION
INSUL	INSULATION
INV	INVERT
ISO JT	ISOLATION JOINT
K	KIPS
KB	KNEE BRACE
KO	KNOCKOUT
KPL	KICK PLATE
KSF	KIPS PER SQUARE FOOT
LD BRG	LOAD BEARING
LL	LIVE LOAD
LLBB	LONG LEG BACK TO BACK
LLH	LONG LEG HORIZONTAL
LLV	LONG LEG VERTICAL
LNTL	LINTEL
LONG	LONGITUDINAL
LP	LOW POINT
MAX	MAXIMUM
MECH	MECHANICAL
MEP	MECHANICAL-ELECTRICAL-PLUMBING
MFR	MANUFACTURER
MIN	MINIMUM
MO	MASONRY OPENING
MTL	METAL
NIC	NOT IN CONTRACT
NOM	NOMINAL
NTS	NOT TO SCALE
NWT	NORMAL WEIGHT
OC	ON CENTER
OD	OUTSIDE DIAMETER
OF	OUTSIDE FACE
OPNG	OPENING
OPP	OPPOSITE
PAF	POWDER ACTUATED FASTENER
PCC	PRECAST CONCRETE
PEMB	PRE ENGINEERED METAL BUILDING
PL	PLATE
PLAT	PLATFORM
PLF	POUNDS PER LINEAR FOOT
PREFAB	PREFABRICATED
PRELIM	PRELIMINARY
PSF	POUNDS PER SQUARE FOOT
PT	PRESSURE TREATED
PUR	PURLINS
PVMT	PAVEMENT
QC	QUALITY CONTROL
R	RADIUS
RD	ROOF DRAIN
RDG INS	RIGID INSULATION
REF	REFERENCE
REINF	REINFORCING
REQD	REQUIRED
RET	RETAINING
RH	ROOF HATCH
RO	ROUGH OPENING
SCHED	SCHEDULE
SF	SQUARE FEET
SIM	SIMILAR
SPA	SPACE(S)
SPEC	SPECIFICATION
SQ	SQUARE
STA	STATION
STD	STANDARD
STL	STEEL
T&B	TOP AND BOTTOM
TD	TRENCH DRAIN
TEMP	TEMPORARY
THK	THICKNESS
THRU	THROUGH
TO	TOP OF
TOC	TOP OF CONCRETE
TOFTG	TOP OF FOOTING
TOS	TOP OF STEEL
TOSL	TOP OF SLAB
TYP	TYPICAL
UNEX	UNEXCAVATED
UNO	UNLESS NOTED OTHERWISE
VERT	VERTICAL
VIF	VERIFY IN FIELD
VR	VAPOR RETARDER
W/	WITH
W/O	WITHOUT
WBL	WOOD BLOCKING
WF	WALL FOOTING
WP	WORKING POINT
WS	WALL STEP
WWF	WELDED WIRE FABRIC
X BRACE	CROSS BRACE
XS	EXTRA STRONG
XXS	DOUBLE EXTRA STRONG

DRAFT - NOT FOR BID OR CONSTRUCTION

BASE TECHNICAL CONCEPT PLANS

THIS IS A PROGRESS DRAWING AND IS NOT INTENDED TO BE RELIED UPON BY ANY PARTY AS INDICATING A FINAL DESIGN OR TO BE INTENDED FOR BIDDING OR CONSTRUCTION PURPOSES. THIS PROGRESS DRAWING IS PROVIDED SOLELY FOR INFORMATION WITHOUT REPRESENTATION OR WARRANTY OF ANY KIND. THIS PROGRESS DRAWING HAS NOT BEEN SUBJECT TO A FORMAL QUALITY CONTROL CHECKING PROCESS.

REV.	DATE	REVISION DESCRIPTION	SHEET NO.

THE INFORMATION, INCLUDING ESTIMATED QUANTITIES OF WORK, SHOWN ON THESE SHEETS IS BASED ON LIMITED INVESTIGATIONS BY THE STATE AND IS IN NO WAY WARRANTED TO INDICATE THE CONDITIONS OF ACTUAL QUANTITIES OF WORK WHICH WILL BE REQUIRED.

Plotted Date: 03/06/2020

DESIGNER/DRAFTER: BAS

CHECKED BY: RPC

STATE OF CONNECTICUT
DEPARTMENT OF TRANSPORTATION

SIGNATURE/BLOCK:

CHA
2139 Silas Deane Highway, Suite 212
Rocky Hill, CT 06067-2336
860.257.4557 • www.chacompanies.com

PROJECT TITLE: STAMFORD PARKING GARAGE

TOWN: STAMFORD

DRAWING TITLE: FOUNDATION NOTES AND ABBREVIATIONS

PROJECT NO. 301-0047

DRAWING NO. S-001

SHEET NO.

A - SCOPE OF DRAWINGS

1. THESE DRAWINGS ARE FOR CONCEPTUAL DESIGN ONLY AND ARE NOT INTENDED FOR CONSTRUCTION.

2. THESE DRAWINGS ARE TO BE USED WITH FOUNDATION DRAWINGS BY CHA.

3. CONCEPTUAL DESIGN FOR MODIFICATIONS TO THE EXISTING STATION ARE BASED ON LIMITED KNOWLEDGE OF EXISTING CONDITIONS. EXISTING CONDITIONS MUST BE VERIFIED IN FIELD.

B - GENERAL

1. ALL DESIGN IN ACCORDANCE WITH THE REQUIREMENTS OF THE 2018 CONNECTICUT STATE BUILDING CODE.

2. FOR LOCATION OF CURBS, CONCRETE PADS, FLOOR DEPRESSIONS, ROOF AND FLOOR DRAINS, SEE ARCHITECTURAL DRAWINGS.

3. NOTES, TYPICAL DETAILS, AND SCHEDULES APPLY TO ALL STRUCTURAL WORK UNLESS NOTED OTHERWISE. FOR CONDITIONS NOT SPECIFICALLY SHOWN, PROVIDE DETAILS OF A SIMILAR NATURE.

4. STRUCTURAL DRAWINGS SHALL BE USED IN CONJUNCTION WITH THE SPECIFICATIONS AND ARCHITECTURAL DRAWINGS.

5. DO NOT SCALE DRAWINGS TO OBTAIN DIMENSIONAL INFORMATION.

6. SEE ARCHITECTURAL DRAWINGS AND SPECIFICATIONS FOR WATER OR DAMPROOFING AND FIREPROOFING DETAILS AND REQUIREMENTS.

7. TOP OF CONCRETE SLABS ARE AT FLOOR REFERENCE ELEVATIONS EXCEPT AS NOTED.

C - STRUCTURAL STEEL

1. THE DESIGN OF ALL STRUCTURAL STEEL IS IN ACCORDANCE WITH THE REQUIREMENTS OF THE AMERICAN INSTITUTE OF STEEL CONSTRUCTION "LOAD AND RESISTANCE FACTOR DESIGN SPECIFICATION FOR STRUCTURAL STEEL BUILDINGS", MARCH 2010 ("AISC 360-10").

2. MATERIAL FOR STRUCTURAL STEEL SHAPES SHALL CONFORM TO THE FOLLOWING UNLESS NOTES OTHERWISE ON THE DRAWINGS:

WIDE FLANGE SECTIONS:	ASTM A992, GRADE 50
M, S, C, MC, & L SHAPES & PLATES:	ASTM A36
HSS SHAPES:	ASTM A500, GRADE B (FY = 46 KSI)
PIPE SHAPES:	ASTM A53, GRADE B
ANCHOR RODS:	ASTM F1554, GRADE 36
SAG RODS	ASTM A36
BASE PLATE GROUT (FLOWABLE)	10,000 PSI

3. MATERIAL ACCEPTANCE OF STRUCTURAL STEEL SHALL CONFORM TO THE CERTIFICATION AND INSPECTION REQUIREMENTS OF AISC.

4. THE FOLLOWING JOINTS MUST BE WELDED OR DESIGNED AS SLIP CRITICAL CLASS A:

   a) BEAM-TO-COLUMN AND GIRDER-TO-COLUMN JOINTS
   b) COLUMN SPLICES
   c) INTERNAL TRUSS JOINTS
   d) JOINTS WITHIN AND CONNECTING TO BRACED FRAMES
   e) JOINTS RESISTING REVERSIBLE, FATIGUE, OR IMPACT LOADING
   f) JOINTS SHARING LOAD BETWEEN BOLTS AND WELDS

5. WELDED CONNECTIONS

   a) WELDING OPERATIONS AND DESIGN SHALL BE IN ACCORDANCE WITH:

      1) RULES OF THE BOARD OF STANDARDS AND APPEALS RULES FOR WELDING
      2) THE AISC SPECIFICATION
      3) STRUCTURAL WELDING CODE, AWS D.1, AS MODIFIED BY AISC SPECIFICATION SECTION J2.

6. ALL STEEL SHALL BE HOT DIP GALVANIZED. MEMBERS TO BE PAINTED SHALL BE GALVANIZED BY THE ZINC METALIZING PROCESS. ANY POINTS OF WELDING SHALL BE TOUCHED UP IN THE FIELD WITH A ZINC-RICH PAINT BY THE STEEL ERECTOR.

D - METAL DECK

1. METAL DECK SHALL BE DESIGNED IN ACCORDANCE WITH THE "NORTH AMERICAN SPECIFICATIONS FOR THE DESIGN OF COLD FORMED STRUCTURAL STEEL MEMBERS ("AISI-NASPEC").

E - FIREPROOFING

9. FOR ALL INFORMATION RELATING TO FIREPROOFING OR FIRE RATED ASSEMBLIES, SEE ARCHITECTURAL DRAWINGS.

F - CONCRETE

1. DESIGN OF REINFORCED CONCRETE MEMBERS IS IN ACCORDANCE WITH THE AMERICAN CONCRETE INSTITUTE "BUILDING CODE REQUIREMENTS FOR STRUCTURAL CONCRETE" ("ACI 318-14") .

2. ALL SLABS ON GRADE, TOPPING SLABS, AND SLABS ON DECK SHALL CONTAIN A COMBINATION OF WELDED WIRE REINFORCING AND MILD REINFORCING STEEL.

G - CONCRETE REINFORCING

1. ALL DETAILING, FABRICATION AND ERECTION OF REINFORCING BARS SHALL COMPLY WITH THE REQUIREMENTS OF ACI 315 AND ACI 318-14.

SERVICE GRAVITY LOAD CRITERIA (PSF)

	GARAGE - TYP. FLOOR	GARAGE- STAIRS	PEDESTRIAN PLATFORM EXTENSION	PEDESTRIAN BRIDGE	EXISTING STATION
STRUCTURAL SLAB	100	100	100	80	80
METAL PANEL FACADE	20	–	–	–	–
PRECAST CONCRETE PANEL FACADE	–	50	–	–	–
GLASS PANEL FACADE	–	20	–	20	–
LIVE LOAD	40	100	100	100	100

NOTES:

1. DEAD LOADS ARE BASED ON CONCEPT DESIGN.
2. LIVE LOADS ARE NOT REDUCED.
3. STRUCTURAL SLAB DOES NOT INCLUDE FLOOR FINISH. SEE ARCH. FOR REQUIREMENTS.
4. SEE ARCH. FOR FACADE TYPE LOCATIONS.

ABBREVIATIONS

A.B.	ANCHOR BOLT	HORIZ.	HORIZONTAL
ACI	AMERICAN CONCRETE INSTITUTE	H.P.	HIGH POINT
ARCH.	ARCHITECTURAL	I.F.	INSIDE FACE
ASTM	AMERICAN SOCIETY FOR TESTING AND MATERIALS	INFO.	INFORMATION
BLDG.	BUILDING	JT.	JOINT
BM.	BEAM	K.	KIPS (1000 LB.)
BOT.	BOTTOM	KSF	KIPS PER SQUARE FOOT
BPL.	BASEPLATE	KSI	KIPS PER SQUARE INCH
BRCG.	BRACING	L.L.	LIVE LOAD
BRG.	BEARING	LLH	LONG LEG HORIZONTAL
B.S.	BOTH SIDE (USED W/ REINF)	LLV	LONG LEG VERTICAL
BTWN.	BETWEEN	L.P.	LOW POINT
B.W.	BOTH WAYS	LWT.	LIGHT WEIGHT
CANT.	CANTILEVER	MAX.	MAXIMUM
C.B.	CONCRETE BEAM	MECH.	MECHANICAL
C.J.	CONTROL JOINT	MTL.	METAL
CL.	CENTERLINE	MFR.	MANUFACTURER
CLR.	CLEAR	MIN.	MINIMUM
CMU	CONCRETE MASONRY UNIT	NO.	NUMBER
COL.	COLUMN	N.S.	NEAR SIDE
COMP.	COMPRESSIBLE	N-S	NORTH-SOUTH
CONC.	CONCRETE	NWT.	NORMAL WEIGHT
CONN.	CONNECTION	O.C.	ON CENTER
CONST.	CONSTRUCTION	O.F.	OUTSIDE FACE
CONT.	CONTINUOUS	OPNG.	OPENING
COORD.	COORDINATE	OPP.HD.	OPPOSITE HAND
DBL.	DOUBLE	ORIENT.	ORIENTATION
DET.	DETAIL	PC.	PRECAST
DEVELOP.	DEVELOPMENT	P.C.	PRECAST CONCRETE
DIAG.	DIAGONAL	PCF	POUNDS PER CUBIC FOOT
DIST.	DISTANCE	PENET.	PENETRATION
DK.	DECK	PL.	PLATE
D.L.	DEAD LOAD	PNL.	PANEL
DN.	DOWN	PSI	POUNDS PER SQUARE INCH
DO	DITTO	PSF	POUNDS PER SQUARE FOOT
DWG.	DRAWING	REINF.	REINFORCING
DWL.	DOWEL	REQD.	REQUIRED
EA.	EACH	RET.	RETAINING
E.F.	EACH FACE	REV.	REVISION
EL.	ELEVATION	RF.	ROOF
ELEC.	ELECTRICAL	SCHED.	SCHEDULE
ELEV.	ELEVATOR	SECT.	SECTION
EMBMT.	EMBEDMENT	SPEC.	SPECIFICATIONS
EQ.	EQUAL	STAGG.	STAGGERED
ETC.	ETCETERA	STD.	STANDARD
E.W.	EACH WAY	STIFF.	STIFFENER
E-W	EAST-WEST	STL.	STEEL
EXIST.	EXISTING	SUPP.	SUPPORT
EXP.	EXPANSION	T.&B.	TOP AND BOTTOM
EXP. JT.	EXPANSION JOINT	TEMP.	TEMPORARY
FDN.	FOUNDATION	THK.	THICK, THICKNESS
FIN.	FINISH	T.O.C.	TOP OF CONCRETE
FLR.	FLOOR	TOL.	TOLERANCE
FRMG.	FRAMING	T.O.S.	TOP OF STEEL
F.S.	FAR SIDE	T.O.W.	TOP OF WALL
FTG.	FOOTING	TYP.	TYPICAL
GA.	GAGE	U.N.O.	UNLESS NOTED OTHERWISE
GALV.	GALVANIZED	V.	VERTICAL (USED W/ REINF.)
G.C.	GENERAL CONTRACTOR	VERT.	VERTICAL
H.	HORIZONTAL (USED W/ REINF.)	V.I.F.	VERIFY IN FIELD
HK.	HOOK	W.P.	WORK POINT
		WWF	WELDED WIRE FABRIC

DRAFT - NOT FOR BID OR CONSTRUCTION

THIS IS A PROGRESS DRAWING AND IS NOT INTENDED TO BE RELIED UPON BY ANY PARTY AS INDICATING A FINAL DESIGN OR TO BE INTENDED FOR BIDDING OR CONSTRUCTION PURPOSES. THIS PROGRESS DRAWING IS PROVIDED SOLELY FOR INFORMATION WITHOUT REPRESENTATION OR WARRANTY OF ANY KIND. THIS PROGRESS DRAWING HAS NOT BEEN SUBJECT TO A FORMAL QUALITY CONTROL CHECKING PROCESS.

BASE TECHNICAL CONCEPT PLANS

REV.	DATE	REVISION DESCRIPTION	SHEET NO.
-	-	-	-
-	-	-	-
-	-	-	-
-	-	-	-
-	-	-	-
-	-	-	-
-	-	-	-

THE INFORMATION, INCLUDING ESTIMATED QUANTITIES OF WORK, SHOWN ON THESE SHEETS IS BASED ON LIMITED INVESTIGATIONS BY THE STATE AND IS IN NO WAY WARRANTED TO INDICATE THE CONDITIONS OF ACTUAL QUANTITIES OF WORK WHICH WILL BE REQUIRED.

Plotted Date: $DATE$

DESIGNER/DRAFTER: **KS**

CHECKED BY:

SCALE AS NOTED

STATE OF CONNECTICUT
DEPARTMENT OF TRANSPORTATION

Filename: $FILEA$

SIGNATURE/ BLOCK:

STV INC.
225 PARK AVENUE SOUTH
NEW YORK, NY 1003

PROJECT TITLE:

STAMFORD
PARKING GARAGE

TOWN: **STAMFORD**

DRAWING TITLE: **GENERAL NOTES, ABBREVIATIONS, AND SCOPE OF WORK**

PROJECT NO. **301-0047**

DRAWING NO. **S-001**

SHEET NO.

Border Version: 11/14/08

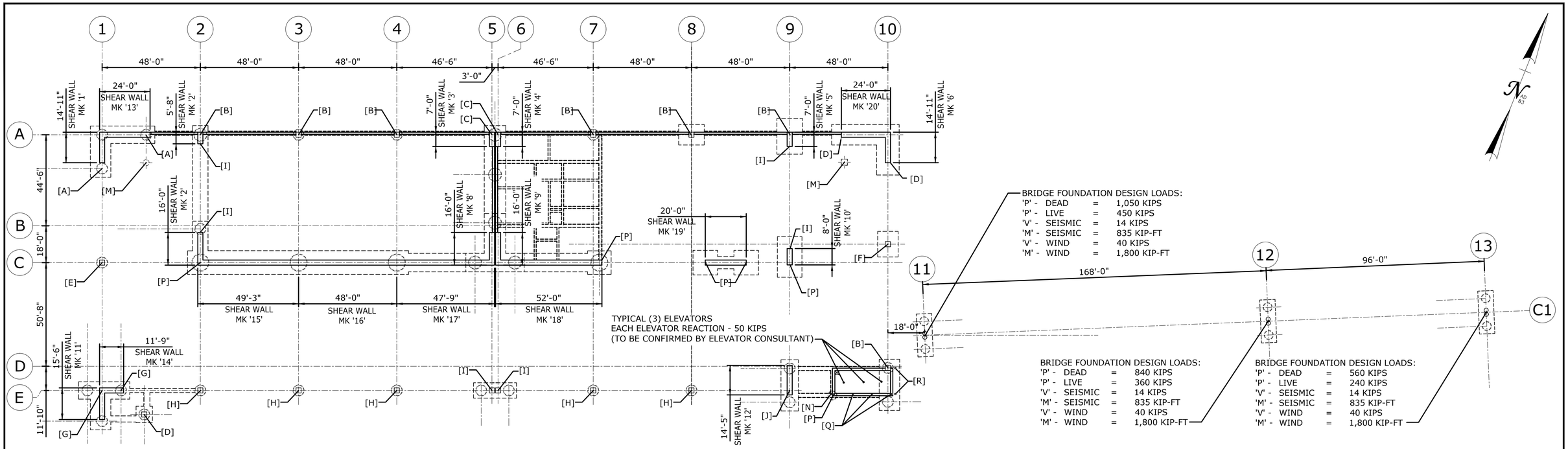

OVERALL FOUNDATION PLAN

SCALE: 1/24" = 1'-0"

1
S-002

NOTES:

1. [X] DENOTES POINT LOAD ELEMENT. REFER TO FOUNDATION LOAD TABLE, THIS DRAWING.
2. MK 'X' DENOTES SHEAR WALL ELEMENT. REFER TO FOUNDATION LOAD TABLE, THIS DRAWING.
3. ALL FOUNDATION DESIGN LOADS SHOWN ON THIS DRAWING HAVE BEEN PROVIDED BY STV, INC.

GARAGE FOUNDATION DESIGN LOAD TABLE

ELEMENT	W (klf)	POINT LOAD (k)	V (k)	MAX T (k)	MAX C (k)
'1'	37		255	730	1145
'2'	37		100	825	990
'3'	37		127	810	1015
'4'	37		144	925	1130
'5'	37		144	925	1130
'6'	37		288	850	1260
'7'	37		291	710	1185
'8'	37		291	710	1185
'9'	37		329	825	1300
'10'	37	2300	160	915	1145
'11'	37		291	710	1185
'12'	37		289	850	1260
'13'	37		173	115	795
'14'	70		91	325	650
'15'	100	1870	362	N/A	2565
'16'	100		362	N/A	2565
'17'	100		362	N/A	2565
'18'	100	2090	720	N/A	2840
'19'	100	WEST END - 2090 EAST END - 500	285	270	1505
'20'	37		346	480	1160
[A]	-	1400	-	-	-
[B]	-	2350	-	-	-
[C]	-	1175	-	-	-
[D]	-	1500	-	-	-
[E]	-	2630	-	-	-
[F]	-	2330	-	-	-
[G]	-	1300	-	-	-
[H]	-	2150	-	-	-
[I]	-	1075	-	-	-
[J]	-	1270	-	-	-
[L]	-	2770	-	-	-
[M]	-	15	-	-	-
[N]	-	190	-	-	-
[P]	-	110	-	-	-
[Q]	-	130	-	-	-
[R]	-	20	-	-	-

LOADS INDICATED ARE SERVICE LEVEL LOADS.

FOUNDATION LOAD TABLE

SCALE: NOT TO SCALE

W = MAXIMUM APPLIED UNIFORM LOAD (KLF, DL & LL)

P = MAXIMUM COLUMN LOAD OR BEAM END REACTION (K, DL & LL)

V = MAXIMUM BASE SHEAR REACTION AT SHEAR WALLS (K)

T = MAXIMUM TENSION REACTION (UPLIFT) AT SHEAR WALL FOR SEISMIC LOAD CASES (K APPLIES AT EITHER END OF SHEAR WALL)

C = MAXIMUM COMPRESSION REACTION AT SHEAR WALL FOR SEISMIC LOAD CASES (K APPLIES AT EITHER END OF SHEAR WALL)

DRAFT - NOT FOR BID OR CONSTRUCTION

BASE TECHNICAL CONCEPT PLANS

THIS IS A PROGRESS DRAWING AND IS NOT INTENDED TO BE RELIED UPON BY ANY PARTY AS INDICATING A FINAL DESIGN OR TO BE INTENDED FOR BIDDING OR CONSTRUCTION PURPOSES. THIS PROGRESS DRAWING IS PROVIDED SOLELY FOR INFORMATION WITHOUT REPRESENTATION OR WARRANTY OF ANY KIND. THIS PROGRESS DRAWING HAS NOT BEEN SUBJECT TO A FORMAL QUALITY CONTROL CHECKING PROCESS.

REV.	DATE	REVISION DESCRIPTION	SHEET NO.

THE INFORMATION, INCLUDING ESTIMATED QUANTITIES OF WORK, SHOWN ON THESE SHEETS IS BASED ON LIMITED INVESTIGATIONS BY THE STATE AND IS IN NO WAY WARRANTED TO INDICATE THE CONDITIONS OF ACTUAL QUANTITIES OF WORK WHICH WILL BE REQUIRED.

Plotted Date: 03/06/2020

DESIGNER/DRAFTER: BAS

CHECKED BY: RPC

SCALE AS NOTED

STATE OF CONNECTICUT
DEPARTMENT OF TRANSPORTATION

SIGNATURE/BLOCK:

CHA
2139 Silas Deane Highway, Suite 212
Rocky Hill, CT 06067-2336
860.257.4557 • www.chacompanies.com

PROJECT TITLE: STAMFORD PARKING GARAGE

TOWN: STAMFORD

DRAWING TITLE: FOUNDATION DESIGN LOADING PLAN

PROJECT NO. 301-0047

DRAWING NO. S-002

SHEET NO.

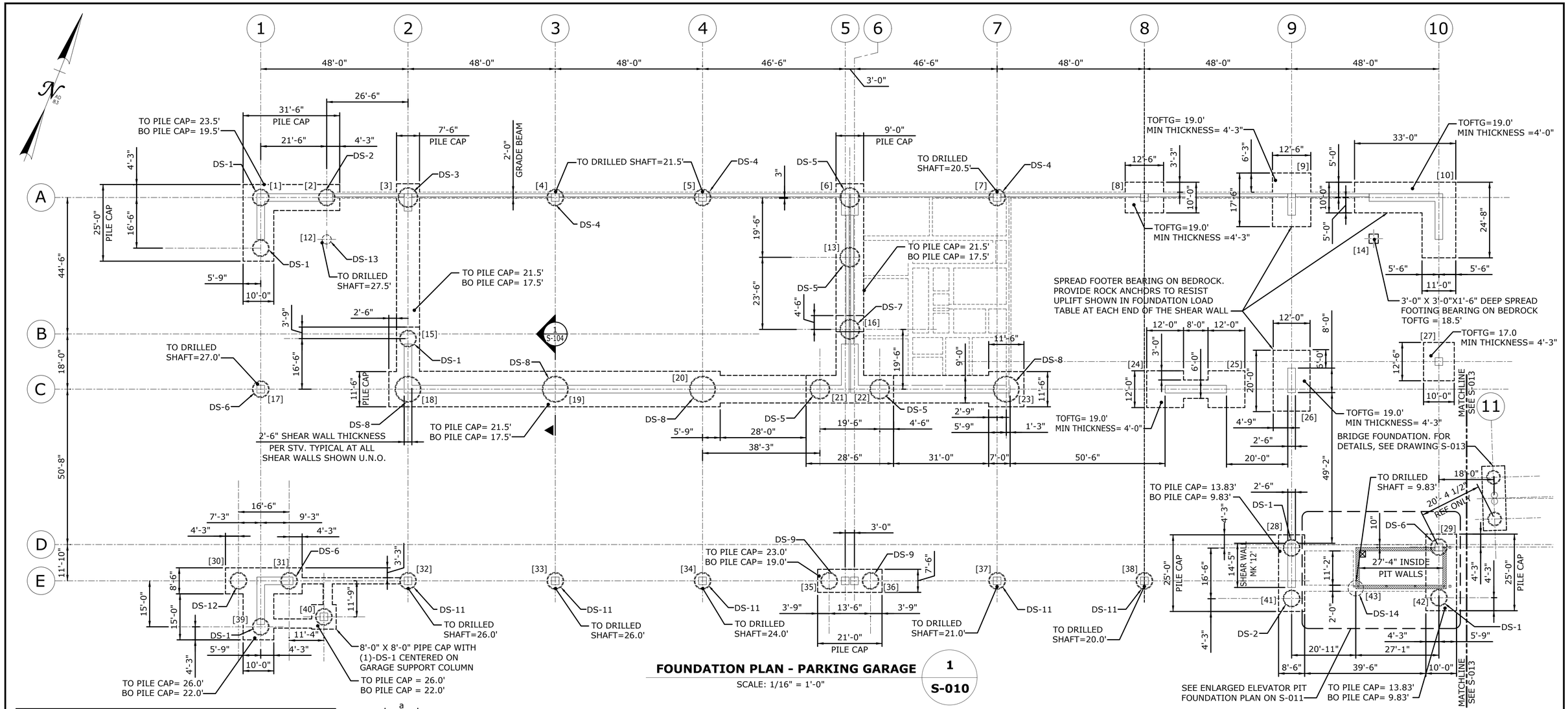

FOUNDATION PLAN - PARKING GARAGE

SCALE: 1/16" = 1'-0"

1 / S-010

DRILLED SHAFT (DS) SCHEDULE				
MARK	a	b	c	REMARKS
DS-1	5'-6"Ø	5'-0"Ø	5'-6"	
DS-2	5'-6"Ø	5'-0"Ø	7'-6"	
DS-3	6'-6"Ø	6'-0"Ø	11'-0"	
DS-4	5'-6"Ø	5'-0"Ø	8'-6"	
DS-5	6'-6"Ø	6'-0"Ø	8'-6"	
DS-6	5'-6"Ø	5'-0"Ø	10'-0"	
DS-7	6'-6"Ø	6'-0"Ø	7'-6"	
DS-8	8'-6"Ø	8'-0"Ø	10'-0"	
DS-9	4'-6"Ø	4'-0"Ø	5'-6"	CONNECTOR BRIDGE FOUNDATION DS, SEE DRAWING S-013 FOR LOCATION
DS-10	6'-6"Ø	6'-0"Ø	6'-6"	
DS-11	5'-6"Ø	5'-0"Ø	8'-0"	
DS-12	5'-6"Ø	5'-0"Ø	7'-0"	
DS-13	3'-0"Ø	0'-0"Ø	0'-0"	
DS-14	5'-0"Ø	0'-0"Ø	0'-0"	

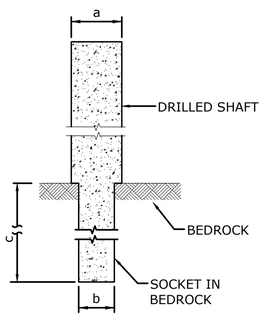

DRILLED SHAFT SCHEDULE

SCALE: N.T.S.

PRELIMINARY FOUNDATION BASIS OF DESIGN AND OTHER NOTES:

1. REFERENCE CHA GEOTECHNICAL MEMORANDA DATED JANUARY 2020.
2. ALL DRILLED SHAFTS SHALL BE SOCKETED INTO THE BEDROCK OR BEARING ON BEDROCK AS SHOWN IN THE DRILLED SHAFT SCHEDULE. THE TOP OF THE ROCK SOCKET SHOULD START AT OR BELOW THE EXISTING TOP OF BEDROCK ELEVATION.
3. ALL SPREAD FOOTERS SHALL BEAR ON THE BEDROCK.
4. DRILLED SHAFT SOCKET IN BEDROCK - ALLOWABLE UNIT TIP RESISTANCE - 35 KSF.
5. DRILLED SHAFT SOCKET IN BEDROCK - ALLOWABLE UNIT SIDE RESISTANCE IN COMPRESSION = 14 KSF.
6. DRILLED SHAFT SOCKET IN BEDROCK - ALLOWABLE UNIT SIDE RESISTANCE IN UPLIFT = 12 KSF.
7. MINIMUM DEPTH OF SOCKET IN BEDROCK EQUAL TO OR GREATER THAN DIAMETER OF THE ROCK SOCKET.
8. SPREAD FOOTING FOUNDATION ALLOWABLE BEARING CAPACITY ON BEDROCK = 20 KSF.
9. [X] REFERS TO THE RESPECTIVE FOUNDATION ELEMENT NUMBER REREFENCED IN THE GEOTECHNICAL BASELINE REPORT (GBR).

DRAFT - NOT FOR BID OR CONSTRUCTION

BASE TECHNICAL CONCEPT PLANS

THIS IS A PROGRESS DRAWING AND IS NOT INTENDED TO BE RELIED UPON BY ANY PARTY AS INDICATING A FINAL DESIGN OR TO BE INTENDED FOR BIDDING OR CONSTRUCTION PURPOSES. THIS PROGRESS DRAWING IS PROVIDED SOLELY FOR INFORMATION WITHOUT REPRESENTATION OR WARRANTY OF ANY KIND. THIS PROGRESS DRAWING HAS NOT BEEN SUBJECT TO A FORMAL QUALITY CONTROL CHECKING PROCESS.

REV.	DATE	REVISION DESCRIPTION	SHEET NO.

THE INFORMATION, INCLUDING ESTIMATED QUANTITIES OF WORK, SHOWN ON THESE SHEETS IS BASED ON LIMITED INVESTIGATIONS BY THE STATE AND IS IN NO WAY WARRANTED TO INDICATE THE CONDITIONS OF ACTUAL QUANTITIES OF WORK WHICH WILL BE REQUIRED.

Plotted Date: 03/06/2020

DESIGNER/DRAFTER: BAS

CHECKED BY: RPC

SCALE AS NOTED

STATE OF CONNECTICUT
DEPARTMENT OF TRANSPORTATION

SIGNATURE/BLOCK:

CHA
2139 Silas Deane Highway, Suite 212
Rocky Hill, CT 06067-2336
860.257.4557 • www.chacompanies.com

PROJECT TITLE: STAMFORD PARKING GARAGE

TOWN: STAMFORD

DRAWING TITLE: FOUNDATION PLAN - PARKING GARAGE

PROJECT NO. 301-0047

DRAWING NO. S-010

SHEET NO.

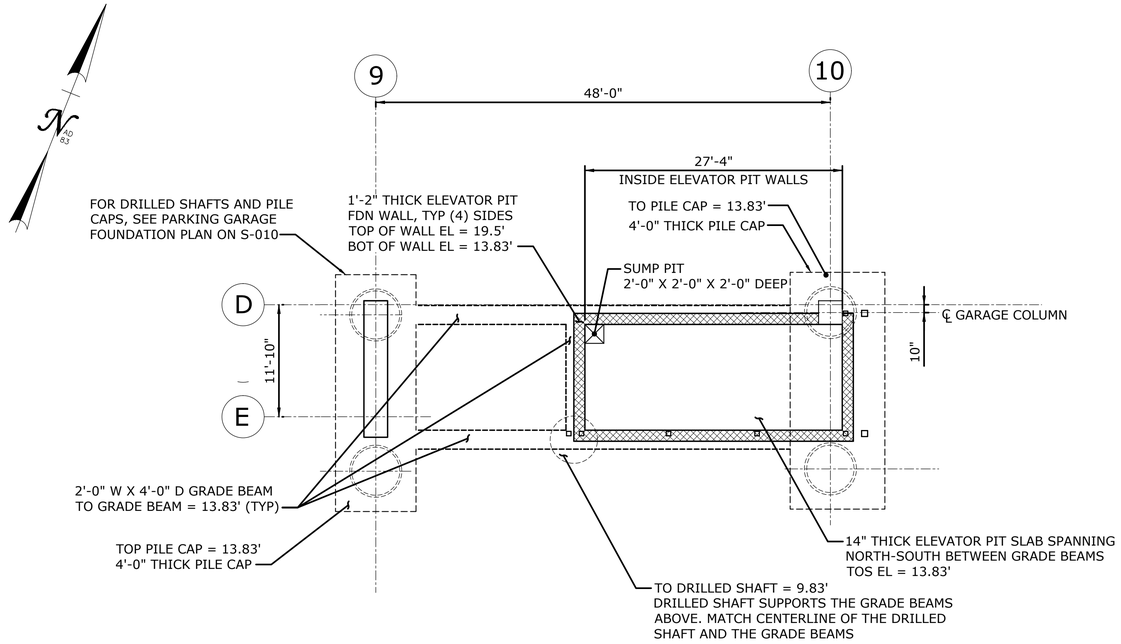

ENLARGED ELEVATOR PIT FOUNDATION PLAN 1 / S-011

SCALE: 1/8" = 1'-0"

DRAFT - NOT FOR BID OR CONSTRUCTION

BASE TECHNICAL CONCEPT PLANS

THIS IS A PROGRESS DRAWING AND IS NOT INTENDED TO BE RELIED UPON BY ANY PARTY AS INDICATING A FINAL DESIGN OR TO BE INTENDED FOR BIDDING OR CONSTRUCTION PURPOSES. THIS PROGRESS DRAWING IS PROVIDED SOLELY FOR INFORMATION WITHOUT REPRESENTATION OR WARRANTY OF ANY KIND. THIS PROGRESS DRAWING HAS NOT BEEN SUBJECT TO A FORMAL QUALITY CONTROL CHECKING PROCESS.

REV.	DATE	REVISION DESCRIPTION	SHEET NO.

THE INFORMATION, INCLUDING ESTIMATED QUANTITIES OF WORK, SHOWN ON THESE SHEETS IS BASED ON LIMITED INVESTIGATIONS BY THE STATE AND IS IN NO WAY WARRANTED TO INDICATE THE CONDITIONS OF ACTUAL QUANTITIES OF WORK WHICH WILL BE REQUIRED.

Plotted Date: 03/06/2020

DESIGNER/DRAFTER: BAS

CHECKED BY: RPC

SCALE AS NOTED

STATE OF CONNECTICUT
DEPARTMENT OF TRANSPORTATION

SIGNATURE/BLOCK:

CHA
2139 Silas Deane Highway, Suite 212
Rocky Hill, CT 06067-2336
860.257.4557 • www.chacompanies.com

PROJECT TITLE: **STAMFORD PARKING GARAGE**

TOWN: **STAMFORD**

DRAWING TITLE: **ENLARGED ELEVATOR PIT FOUNDATION PLAN**

PROJECT NO. **301-0047**

DRAWING NO. **S-011**

SHEET NO.

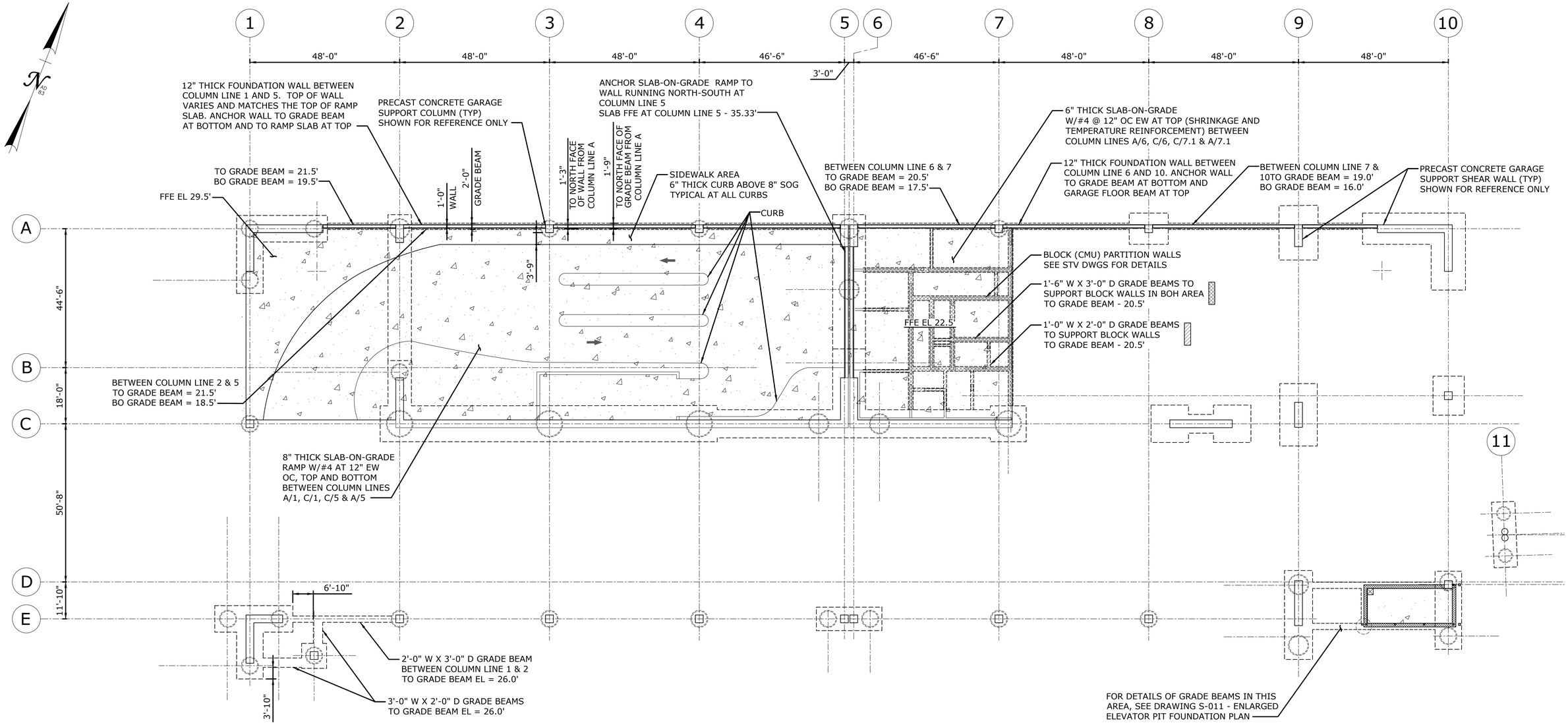

PLAN SHOWING SLAB-ON-GRADE, GRADE BEAMS AND FOUNDATION WALL ALONG PARKING GARAGE NORTH EDGE - PARKING GARAGE

SCALE: 1/16" = 1'-0"

1 / S-012

DRAFT - NOT FOR BID OR CONSTRUCTION

BASE TECHNICAL CONCEPT PLANS

THIS IS A PROGRESS DRAWING AND IS NOT INTENDED TO BE RELIED UPON BY ANY PARTY AS INDICATING A FINAL DESIGN OR TO BE INTENDED FOR BIDDING OR CONSTRUCTION PURPOSES. THIS PROGRESS DRAWING IS PROVIDED SOLELY FOR INFORMATION WITHOUT REPRESENTATION OR WARRANTY OF ANY KIND. THIS PROGRESS DRAWING HAS NOT BEEN SUBJECT TO A FORMAL QUALITY CONTROL CHECKING PROCESS.

REV.	DATE	REVISION DESCRIPTION	SHEET NO.

THE INFORMATION, INCLUDING ESTIMATED QUANTITIES OF WORK, SHOWN ON THESE SHEETS IS BASED ON LIMITED INVESTIGATIONS BY THE STATE AND IS IN NO WAY WARRANTED TO INDICATE THE CONDITIONS OF ACTUAL QUANTITIES OF WORK WHICH WILL BE REQUIRED.

Plotted Date: 03/06/2020

DESIGNER/DRAFTER: BAS

CHECKED BY: RPC

SCALE AS NOTED

STATE OF CONNECTICUT
DEPARTMENT OF TRANSPORTATION

SIGNATURE/BLOCK:

CHA
2139 Silas Deane Highway, Suite 212
Rocky Hill, CT 06067-2336
860.257.4557 • www.chacompanies.com

PROJECT TITLE: STAMFORD PARKING GARAGE

TOWN: STAMFORD

DRAWING TITLE: SLAB PLAN - PARKING GARAGE

PROJECT NO. 301-0047

DRAWING NO. S-012

SHEET NO.

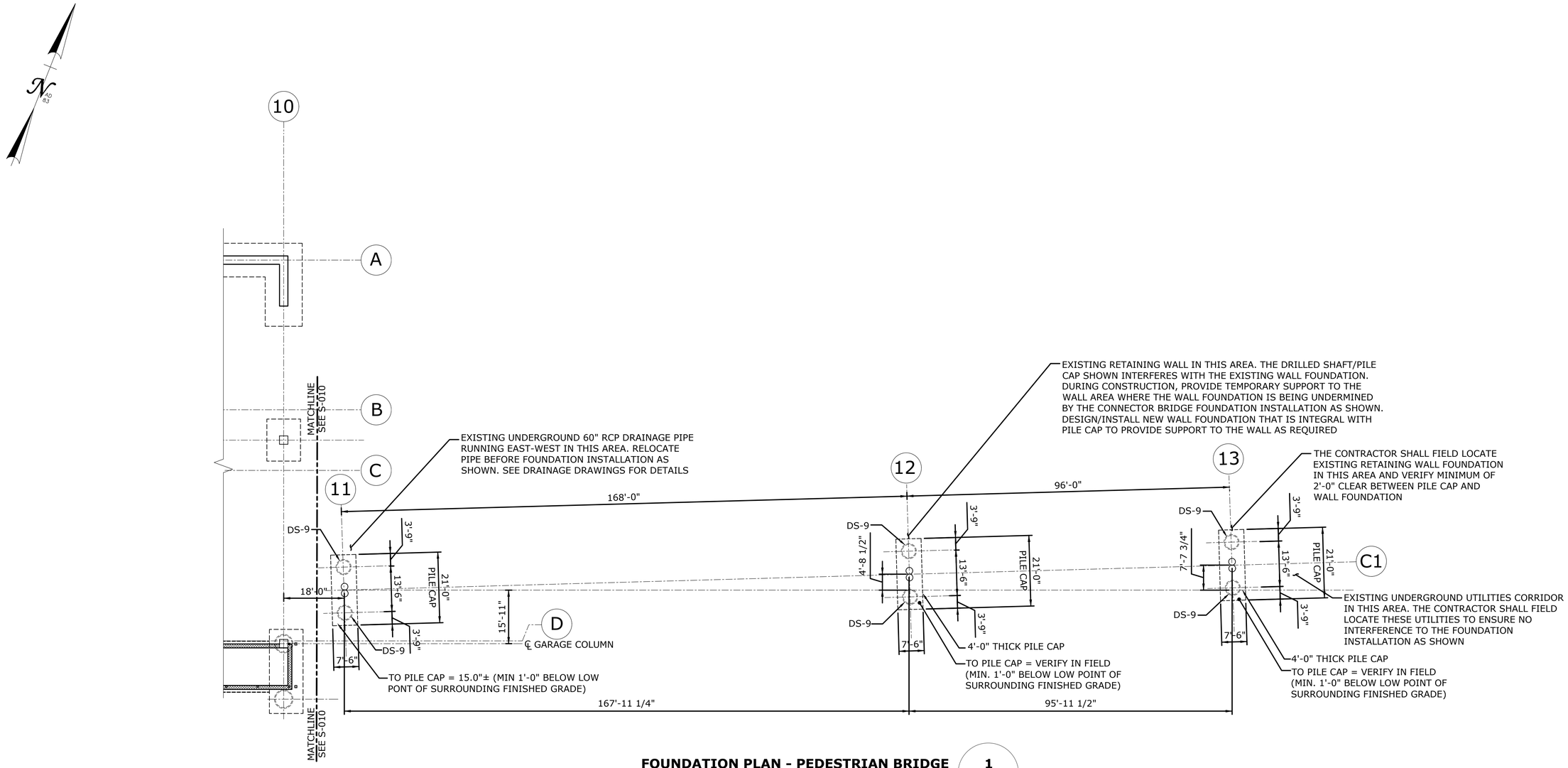

FOUNDATION PLAN - PEDESTRIAN BRIDGE

SCALE: 1/16" = 1'-0"

1 / S-013

NOTES:

1. FOR DRILLED SHAFT DS-9 DETAILS, SEE SCHEDULE ON DRAWING S-010.

DRAFT - NOT FOR BID OR CONSTRUCTION

BASE TECHNICAL CONCEPT PLANS

THIS IS A PROGRESS DRAWING AND IS NOT INTENDED TO BE RELIED UPON BY ANY PARTY AS INDICATING A FINAL DESIGN OR TO BE INTENDED FOR BIDDING OR CONSTRUCTION PURPOSES. THIS PROGRESS DRAWING IS PROVIDED SOLELY FOR INFORMATION WITHOUT REPRESENTATION OR WARRANTY OF ANY KIND. THIS PROGRESS DRAWING HAS NOT BEEN SUBJECT TO A FORMAL QUALITY CONTROL CHECKING PROCESS.

REV.	DATE	REVISION DESCRIPTION	SHEET NO.

THE INFORMATION, INCLUDING ESTIMATED QUANTITIES OF WORK, SHOWN ON THESE SHEETS IS BASED ON LIMITED INVESTIGATIONS BY THE STATE AND IS IN NO WAY WARRANTED TO INDICATE THE CONDITIONS OF ACTUAL QUANTITIES OF WORK WHICH WILL BE REQUIRED.

Plotted Date: 03/06/2020

DESIGNER/DRAFTER: BAS

CHECKED BY: RPC

SCALE AS NOTED

STATE OF CONNECTICUT
DEPARTMENT OF TRANSPORTATION

SIGNATURE/BLOCK:

CHA
2139 Silas Deane Highway, Suite 212
Rocky Hill, CT 06067-2336
860.257.4557 • www.chacompanies.com

PROJECT TITLE: STAMFORD PARKING GARAGE

TOWN: STAMFORD

DRAWING TITLE: FOUNDATION PLAN - PEDESTRIAN BRIDGE

PROJECT NO. 301-0047

DRAWING NO. S-013

SHEET NO.

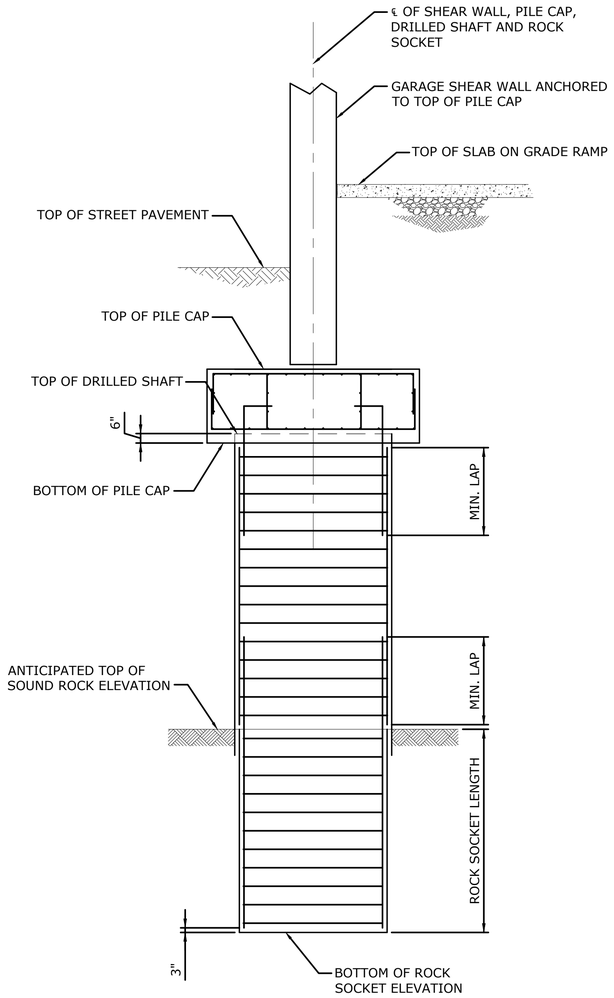

SECTION 1 / S-010

SCALE: 1/4" = 1'-0"

DRAFT - NOT FOR BID OR CONSTRUCTION

BASE TECHNICAL CONCEPT PLANS

THIS IS A PROGRESS DRAWING AND IS NOT INTENDED TO BE RELIED UPON BY ANY PARTY AS INDICATING A FINAL DESIGN OR TO BE INTENDED FOR BIDDING OR CONSTRUCTION PURPOSES. THIS PROGRESS DRAWING IS PROVIDED SOLELY FOR INFORMATION WITHOUT REPRESENTATION OR WARRANTY OF ANY KIND. THIS PROGRESS DRAWING HAS NOT BEEN SUBJECT TO A FORMAL QUALITY CONTROL CHECKING PROCESS.

REV.	DATE	REVISION DESCRIPTION	SHEET NO.

THE INFORMATION, INCLUDING ESTIMATED QUANTITIES OF WORK, SHOWN ON THESE SHEETS IS BASED ON LIMITED INVESTIGATIONS BY THE STATE AND IS IN NO WAY WARRANTED TO INDICATE THE CONDITIONS OF ACTUAL QUANTITIES OF WORK WHICH WILL BE REQUIRED.

Plotted Date: 03/06/2020

DESIGNER/DRAFTER: BAS

CHECKED BY: RPC

SCALE AS NOTED

STATE OF CONNECTICUT
DEPARTMENT OF TRANSPORTATION

SIGNATURE/ BLOCK:

CHA
2139 Silas Deane Highway, Suite 212
Rocky Hill, CT 06067-2336
860.257.4557 • www.chacompanies.com

PROJECT TITLE: **STAMFORD PARKING GARAGE**

TOWN: **STAMFORD**

DRAWING TITLE: **SECTIONS AND DETAILS**

PROJECT NO. **301-0047**

DRAWING NO. **S-014**

SHEET NO.

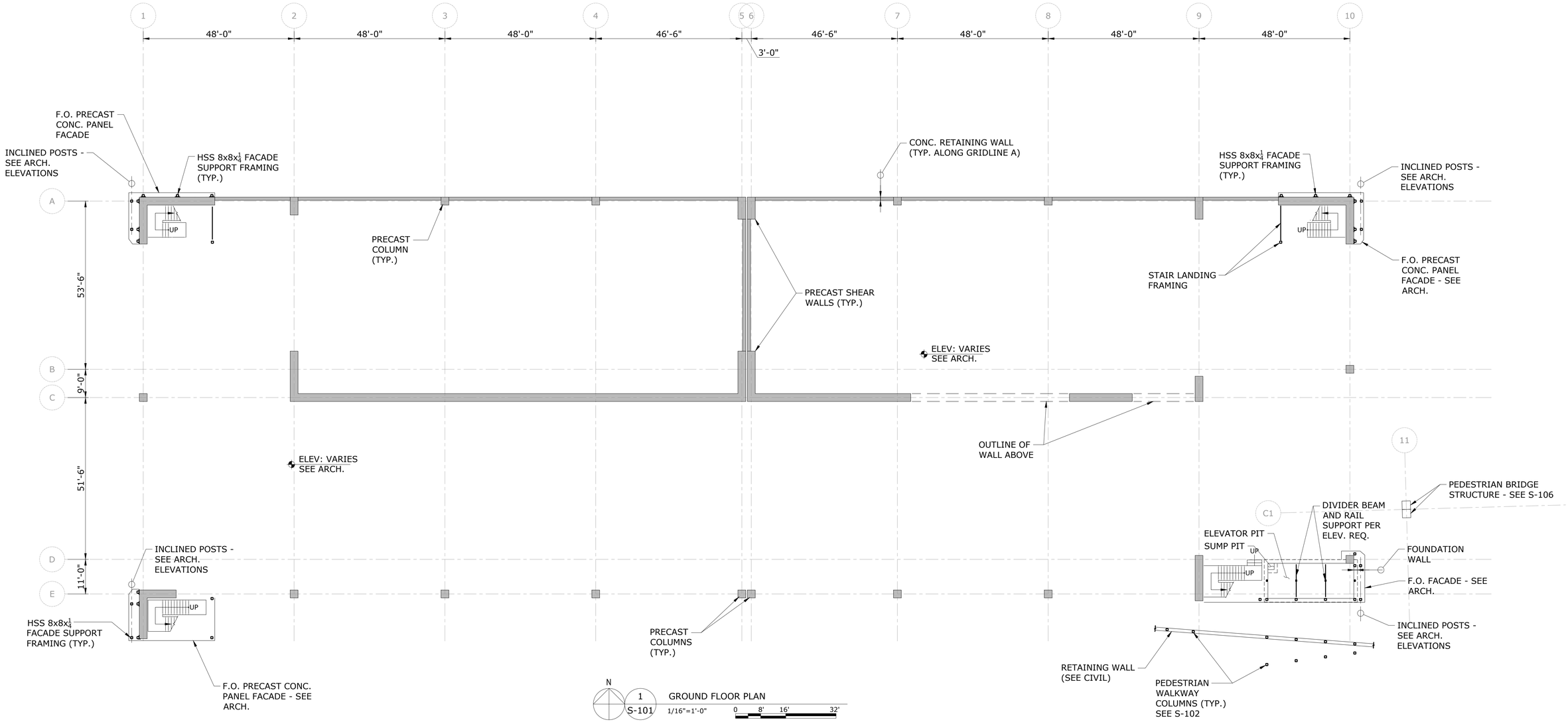

NOTES:
1.) REFER TO SHEET S-001 FOR GENERAL NOTES.
2.) REFER TO FOUNDATION AND CIVIL DRAWINGS BY CHA.

DRAFT - NOT FOR BID OR CONSTRUCTION

THIS IS A PROGRESS DRAWING AND IS NOT INTENDED TO BE RELIED UPON BY ANY PARTY AS INDICATING A FINAL DESIGN OR TO BE INTENDED FOR BIDDING OR CONSTRUCTION PURPOSES. THIS PROGRESS DRAWING IS PROVIDED SOLELY FOR INFORMATION WITHOUT REPRESENTATION OR WARRANTY OF ANY KIND. THIS PROGRESS DRAWING HAS NOT BEEN SUBJECT TO A FORMAL QUALITY CONTROL CHECKING PROCESS.

BASE TECHNICAL CONCEPT PLANS

REV.	DATE	REVISION DESCRIPTION	SHEET NO.
-	-	-	-
-	-	-	-
-	-	-	-
-	-	-	-
-	-	-	-
-	-	-	-
-	-	-	-

THE INFORMATION, INCLUDING ESTIMATED QUANTITIES OF WORK, SHOWN ON THESE SHEETS IS BASED ON LIMITED INVESTIGATIONS BY THE STATE AND IS IN NO WAY WARRANTED TO INDICATE THE CONDITIONS OF ACTUAL QUANTITIES OF WORK WHICH WILL BE REQUIRED.

Plotted Date: $DATE$

DESIGNER/DRAFTER: **KS**

CHECKED BY:

SCALE AS NOTED

STATE OF CONNECTICUT
DEPARTMENT OF TRANSPORTATION

Filename: $FILEA$

SIGNATURE/ BLOCK:

SYI INC.
225 PARK AVENUE SOUTH
NEW YORK, NY 1003

PROJECT TITLE:

STAMFORD PARKING GARAGE

TOWN: **STAMFORD**

DRAWING TITLE: **GROUND FLOOR PLAN**

PROJECT NO. **301-0047**

DRAWING NO. **S-101**

SHEET NO.

Border Version: 11/14/08

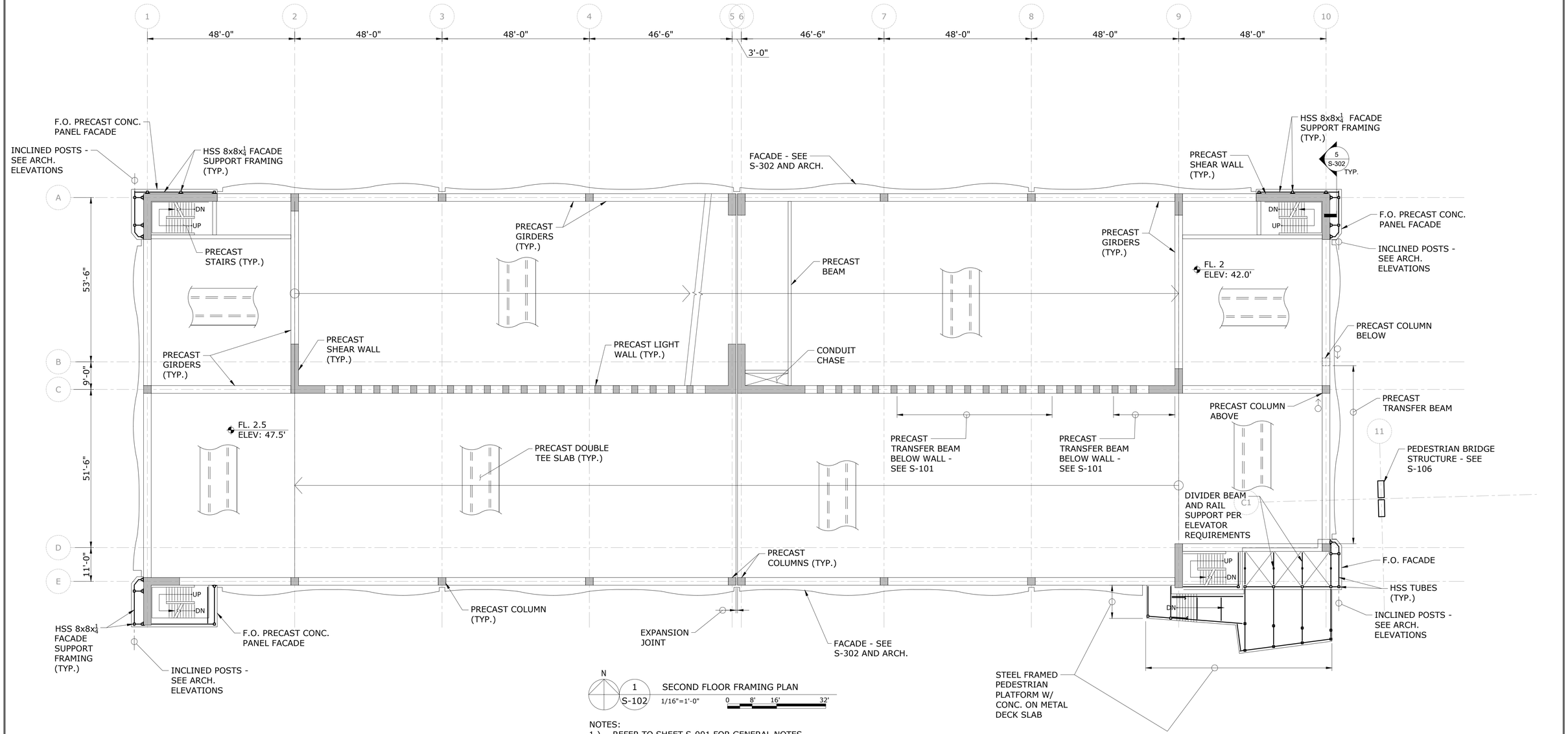

N

1
S-102

SECOND FLOOR FRAMING PLAN

1/16"=1'-0"

0 8' 16' 32'

NOTES:

1.) REFER TO SHEET S-001 FOR GENERAL NOTES.
2.) PRECAST DOUBLE TEE SLABS TO BE PRETOPPED. BEAMS TO RECEIVE ADDITIONAL 2" OF TOPPING IN THE FIELD.
3.) REFER TO SHEET S-302 AND ARCH. FOR FACADE INFORMATION.
4.) ALL STEEL TO BE HOT DIPPED GALVANIZED.
5.) SEE ARCH. FOR BUILDING ELEVATIONS AND SECTIONS.
6.) SEE ARCH. DWGS FOR LOCATION AND ADDITIONAL INFORMATION FOR GUARD RAIL, STAIRS, AND FACADE.

DRAFT - NOT FOR BID OR CONSTRUCTION

THIS IS A PROGRESS DRAWING AND IS NOT INTENDED TO BE RELIED UPON BY ANY PARTY AS INDICATING A FINAL DESIGN OR TO BE INTENDED FOR BIDDING OR CONSTRUCTION PURPOSES. THIS PROGRESS DRAWING IS PROVIDED SOLELY FOR INFORMATION WITHOUT REPRESENTATION OR WARRANTY OF ANY KIND. THIS PROGRESS DRAWING HAS NOT BEEN SUBJECT TO A FORMAL QUALITY CONTROL CHECKING PROCESS.

BASE TECHNICAL CONCEPT PLANS

REV.	DATE	REVISION DESCRIPTION	SHEET NO.
-	-	-	-
-	-	-	-
-	-	-	-
-	-	-	-
-	-	-	-
-	-	-	-
-	-	-	-

THE INFORMATION, INCLUDING ESTIMATED QUANTITIES OF WORK, SHOWN ON THESE SHEETS IS BASED ON LIMITED INVESTIGATIONS BY THE STATE AND IS IN NO WAY WARRANTED TO INDICATE THE CONDITIONS OF ACTUAL QUANTITIES OF WORK WHICH WILL BE REQUIRED.

Plotted Date: $DATE$

DESIGNER/DRAFTER: **KS**

CHECKED BY:

SCALE AS NOTED

STATE OF CONNECTICUT
DEPARTMENT OF TRANSPORTATION

Filename: $FILEA$

SIGNATURE/ BLOCK:

STV INC.
225 PARK AVENUE SOUTH
NEW YORK, NY 1003

PROJECT TITLE:

STAMFORD PARKING GARAGE

TOWN: **STAMFORD**

DRAWING TITLE: **SECOND FLOOR FRAMING PLAN**

PROJECT NO. **301-0047**

DRAWING NO. **S-102**

SHEET NO.

Border Version: 11/14/08

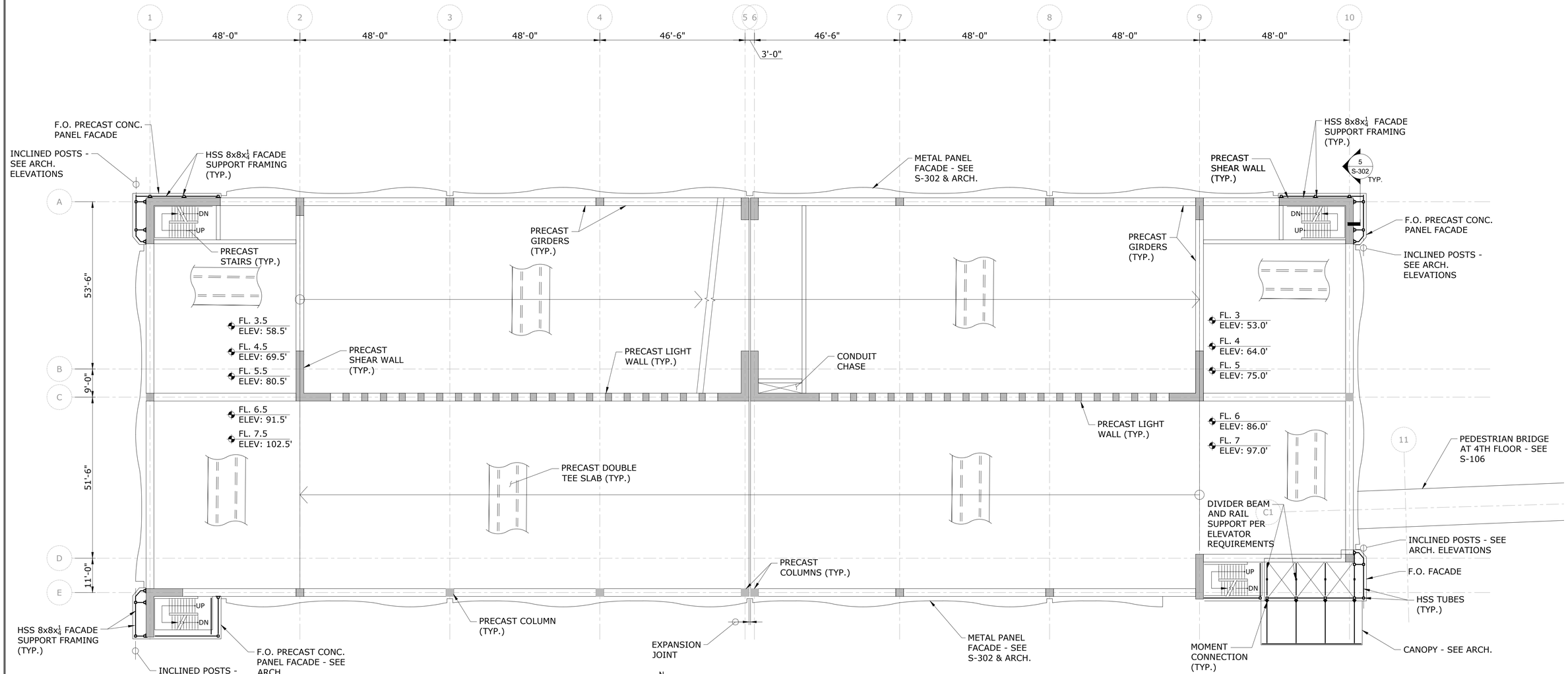

N

1
S-103

THIRD THRU SEVENTH FLOOR FRAMING PLAN

1/16"=1'-0" 0 8' 16' 32'

NOTES:

1.) REFER TO SHEET S-001 FOR GENERAL NOTES.
2.) PRECAST DOUBLE TEE SLABS TO BE PRETOPPED. BEAMS TO RECEIVE ADDITIONAL 2" OF TOPPING IN THE FIELD.
3.) REFER TO SHEET S-302 AND ARCH. FOR FACADE INFORMATION.
4.) ALL STEEL TO BE HOT DIPPED GALVANIZED.
5.) SEE ARCH. FOR BUILDING ELEVATIONS AND SECTIONS.
6.) SEE ARCH. DWGS FOR LOCATION AND ADDITIONAL INFORMATION FOR GUARD RAIL, STAIRS, AND FACADE.

DRAFT - NOT FOR BID OR CONSTRUCTION

THIS IS A PROGRESS DRAWING AND IS NOT INTENDED TO BE RELIED UPON BY ANY PARTY AS INDICATING A FINAL DESIGN OR TO BE INTENDED FOR BIDDING OR CONSTRUCTION PURPOSES. THIS PROGRESS DRAWING IS PROVIDED SOLELY FOR INFORMATION WITHOUT REPRESENTATION OR WARRANTY OF ANY KIND. THIS PROGRESS DRAWING HAS NOT BEEN SUBJECT TO A FORMAL QUALITY CONTROL CHECKING PROCESS.

BASE TECHNICAL CONCEPT PLANS

REV.	DATE	REVISION DESCRIPTION	SHEET NO.
-	-	-	-
-	-	-	-
-	-	-	-
-	-	-	-
-	-	-	-
-	-	-	-
-	-	-	-

THE INFORMATION, INCLUDING ESTIMATED QUANTITIES OF WORK, SHOWN ON THESE SHEETS IS BASED ON LIMITED INVESTIGATIONS BY THE STATE AND IS IN NO WAY WARRANTED TO INDICATE THE CONDITIONS OF ACTUAL QUANTITIES OF WORK WHICH WILL BE REQUIRED.

Plotted Date: $DATE$

DESIGNER/DRAFTER: **KS**

CHECKED BY:

SCALE AS NOTED

STATE OF CONNECTICUT
DEPARTMENT OF TRANSPORTATION

Filename: $FILEA$

SIGNATURE/ BLOCK:

STV INC
225 PARK AVENUE SOUTH
NEW YORK, NY 1003

PROJECT TITLE:

STAMFORD PARKING GARAGE

TOWN: **STAMFORD**

PROJECT NO. **301-0047**

DRAWING TITLE: **THIRD, FOURTH, FIFTH, SIXTH, SEVENTH FLOOR FRAMING PLAN**

DRAWING NO. **S-103**

SHEET NO.

Border Version: 11/14/08

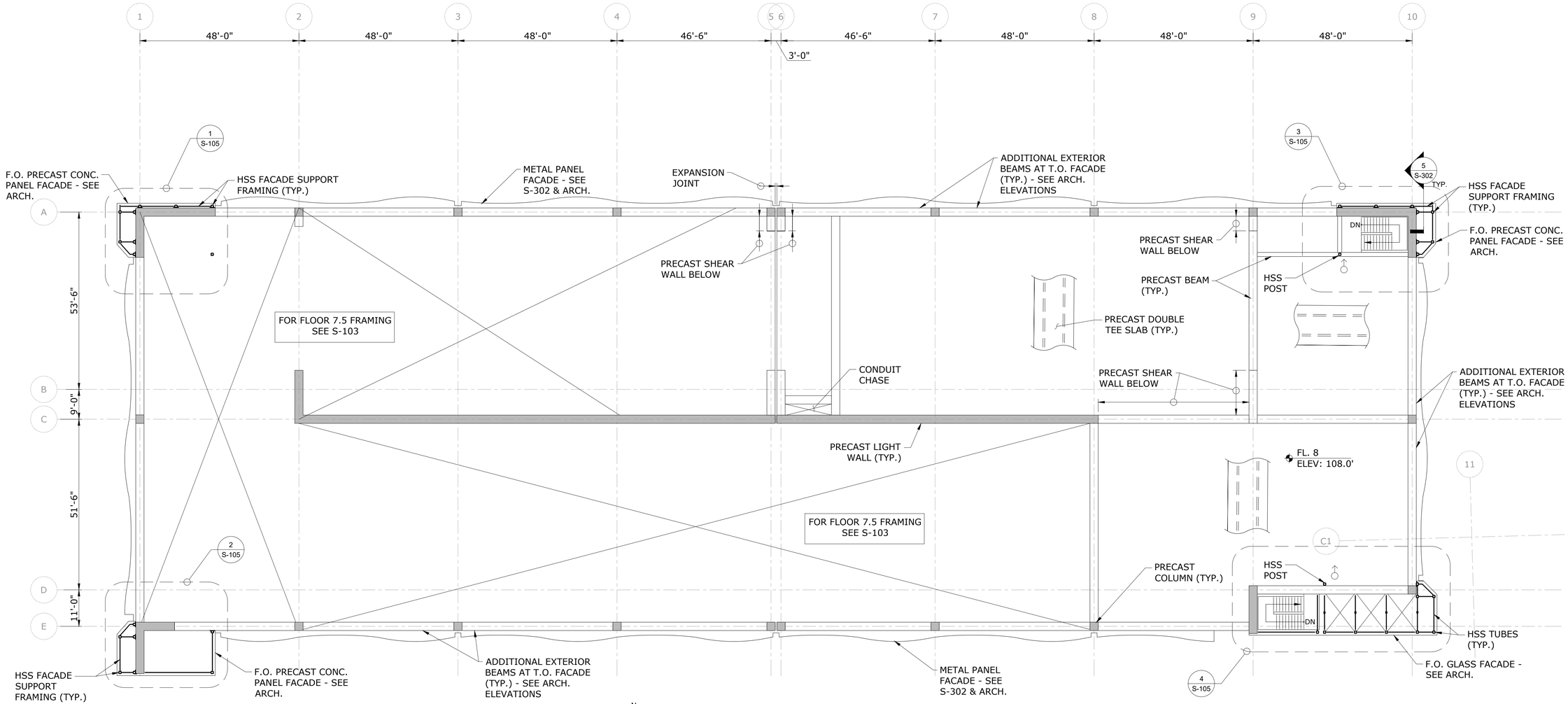

N

1 S-105 8TH FLOOR FRAMING PLAN
1/16"=1'-0" 0 8' 16' 32'

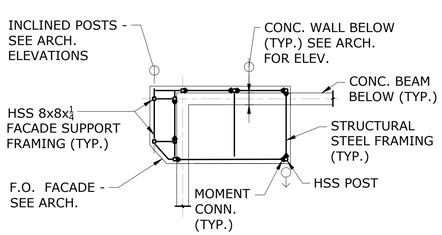

1 S-105 STAIR BULKHEAD FRAMING PLAN
1/16"=1'-0" 0 8' 16' 32'

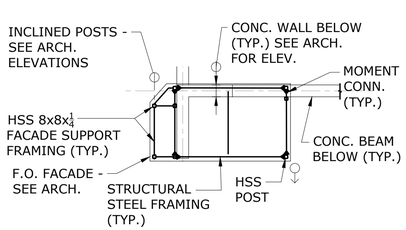

2 S-105 STAIR BULKHEAD FRAMING PLAN
1/16"=1'-0" 0 8' 16' 32'

NOTES:
1.) REFER TO SHEET S-001 FOR GENERAL NOTES.
2.) PRECAST DOUBLE TEE SLABS TO BE PRETOPPED. BEAMS TO RECEIVE ADDITIONAL 2" OF TOPPING IN THE FIELD.
3.) REFER TO SHEET S-302 AND ARCH. FOR FACADE INFORMATION.
4.) ALL STEEL TO BE HOT DIPPED GALVANIZED.
5.) SEE ARCH. FOR BUILDING ELEVATIONS AND SECTIONS.
6.) SEE ARCH. DWGS FOR LOCATION AND ADDITIONAL INFORMATION FOR GUARD RAIL, STAIRS, AND FACADE.

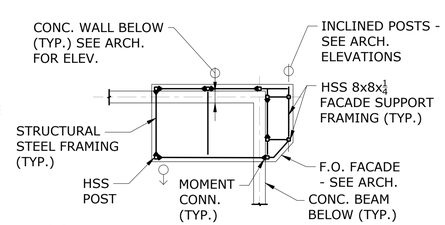

3 S-105 STAIR BULKHEAD FRAMING PLAN
1/16"=1'-0" 0 8' 16' 32'

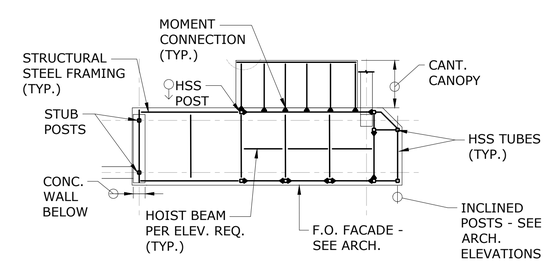

4 S-105 STAIR BULKHEAD FRAMING PLAN
1/16"=1'-0" 0 8' 16' 32'

DRAFT - NOT FOR BID OR CONSTRUCTION

BASE TECHNICAL CONCEPT PLANS

THIS IS A PROGRESS DRAWING AND IS NOT INTENDED TO BE RELIED UPON BY ANY PARTY AS INDICATING A FINAL DESIGN OR TO BE INTENDED FOR BIDDING OR CONSTRUCTION PURPOSES. THIS PROGRESS DRAWING IS PROVIDED SOLELY FOR INFORMATION WITHOUT REPRESENTATION OR WARRANTY OF ANY KIND. THIS PROGRESS DRAWING HAS NOT BEEN SUBJECT TO A FORMAL QUALITY CONTROL CHECKING PROCESS.

REV.	DATE	REVISION DESCRIPTION	SHEET NO.
-	-	-	-
-	-	-	-
-	-	-	-
-	-	-	-
-	-	-	-
-	-	-	-
-	-	-	-

THE INFORMATION, INCLUDING ESTIMATED QUANTITIES OF WORK, SHOWN ON THESE SHEETS IS BASED ON LIMITED INVESTIGATIONS BY THE STATE AND IS IN NO WAY WARRANTED TO INDICATE THE CONDITIONS OF ACTUAL QUANTITIES OF WORK WHICH WILL BE REQUIRED.

Plotted Date: $DATE$

DESIGNER/DRAFTER: **KS**

CHECKED BY:

SCALE AS NOTED

STATE OF CONNECTICUT
DEPARTMENT OF TRANSPORTATION

Filename: $FILEA$

SIGNATURE/ BLOCK:

STV INC.
225 PARK AVENUE SOUTH
NEW YORK, NY 1003

PROJECT TITLE:
STAMFORD PARKING GARAGE

TOWN: **STAMFORD**

DRAWING TITLE: **EIGHTH FLOOR PLAN**

PROJECT NO. **301-0047**

DRAWING NO. **S-105**

SHEET NO.

Border Version: 11/14/08

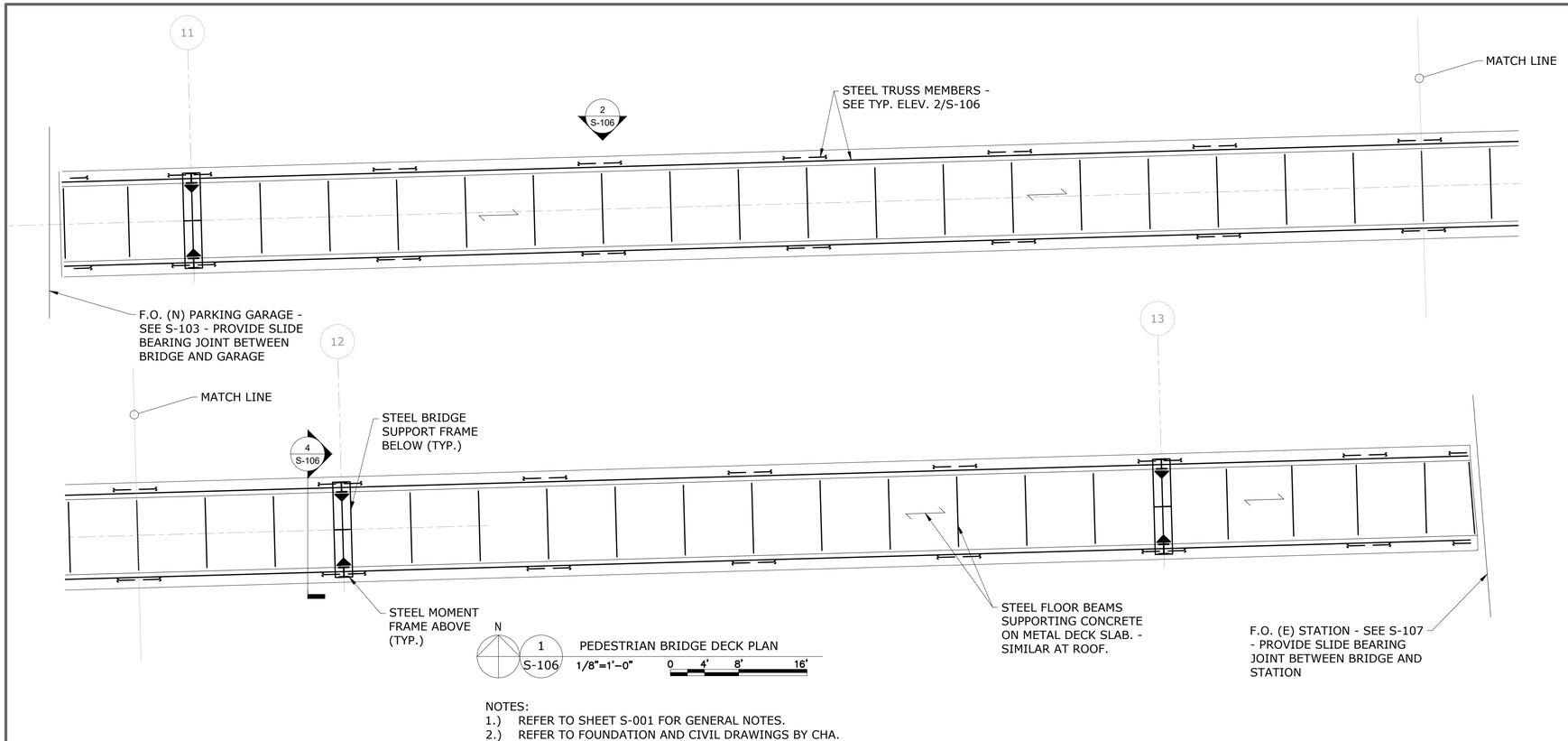

1 S-106 PEDESTRIAN BRIDGE DECK PLAN
1/8"=1'-0" 0 4' 8' 16'

NOTES:
1.) REFER TO SHEET S-001 FOR GENERAL NOTES.
2.) REFER TO FOUNDATION AND CIVIL DRAWINGS BY CHA.
3.) REFER TO ARCH. DWGS FOR DIMENSIONS,ELEVATIONS, AND SLOPE OF BRIDGE.
5.) ALL STEEL TO BE GALVANIZED.

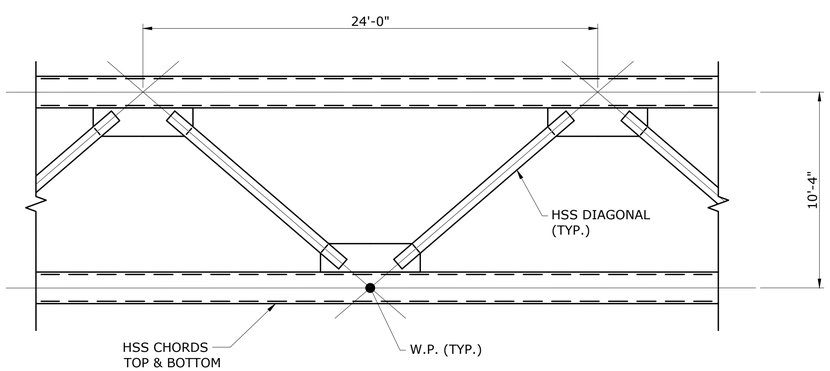

2 S-106 TYPICAL TRUSS ELEVATION
1/4"=1'-0" 0 2' 4' 8'

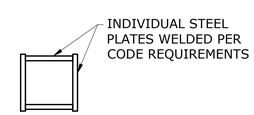

3 S-106 BUILT UP BOX COLUMN SECTION
NOT TO SCALE

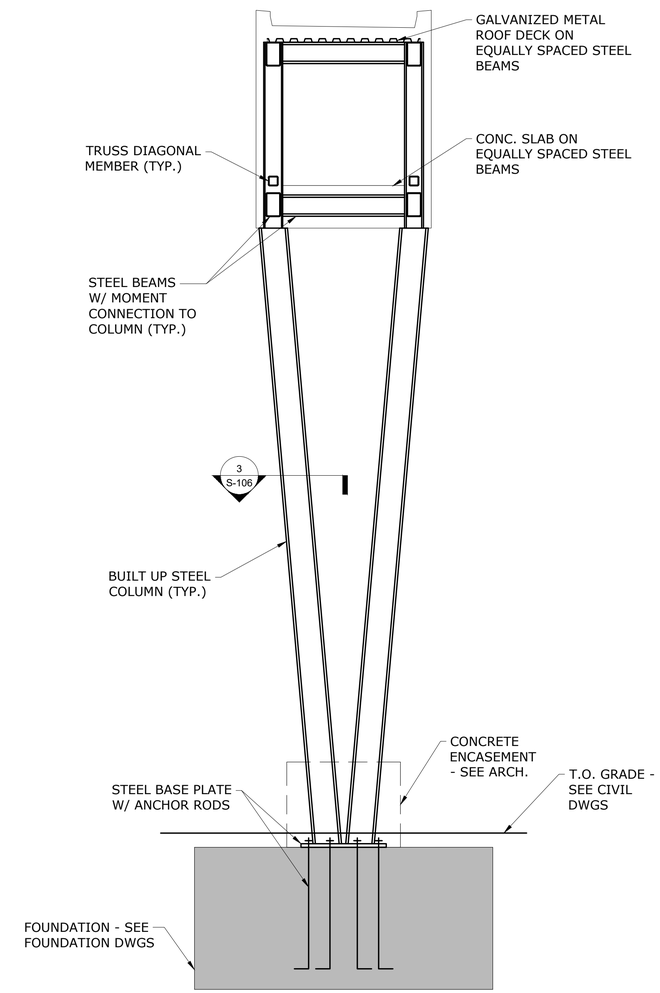

4 S-106 BRIDGE SECTION AT SUPPORT FRAME
3/16"=1'-0" 0 3' 6' 12'

DRAFT - NOT FOR BID OR CONSTRUCTION

BASE TECHNICAL CONCEPT PLANS

THIS IS A PROGRESS DRAWING AND IS NOT INTENDED TO BE RELIED UPON BY ANY PARTY AS INDICATING A FINAL DESIGN OR TO BE INTENDED FOR BIDDING OR CONSTRUCTION PURPOSES. THIS PROGRESS DRAWING IS PROVIDED SOLELY FOR INFORMATION WITHOUT REPRESENTATION OR WARRANTY OF ANY KIND. THIS PROGRESS DRAWING HAS NOT BEEN SUBJECT TO A FORMAL QUALITY CONTROL CHECKING PROCESS.

REV.	DATE	REVISION DESCRIPTION	SHEET NO.
-	-	-	-
-	-	-	-
-	-	-	-
-	-	-	-
-	-	-	-
-	-	-	-
-	-	-	-

THE INFORMATION, INCLUDING ESTIMATED QUANTITIES OF WORK, SHOWN ON THESE SHEETS IS BASED ON LIMITED INVESTIGATIONS BY THE STATE AND IS IN NO WAY WARRANTED TO INDICATE THE CONDITIONS OF ACTUAL QUANTITIES OF WORK WHICH WILL BE REQUIRED.

Plotted Date: $DATE$

DESIGNER/DRAFTER: **KS**

CHECKED BY:

SCALE AS NOTED

STATE OF CONNECTICUT
DEPARTMENT OF TRANSPORTATION

Filename: $FILEA$

SIGNATURE/ BLOCK:

STV INC.
225 PARK AVENUE SOUTH
NEW YORK, NY 1003

PROJECT TITLE:
STAMFORD PARKING GARAGE

TOWN: **STAMFORD**

DRAWING TITLE: **PEDESTRIAN BRIDGE PLAN AND SECTIONS**

PROJECT NO. **301-0047**

DRAWING NO. **S-106**

SHEET NO.

Border Version: 11/14/08

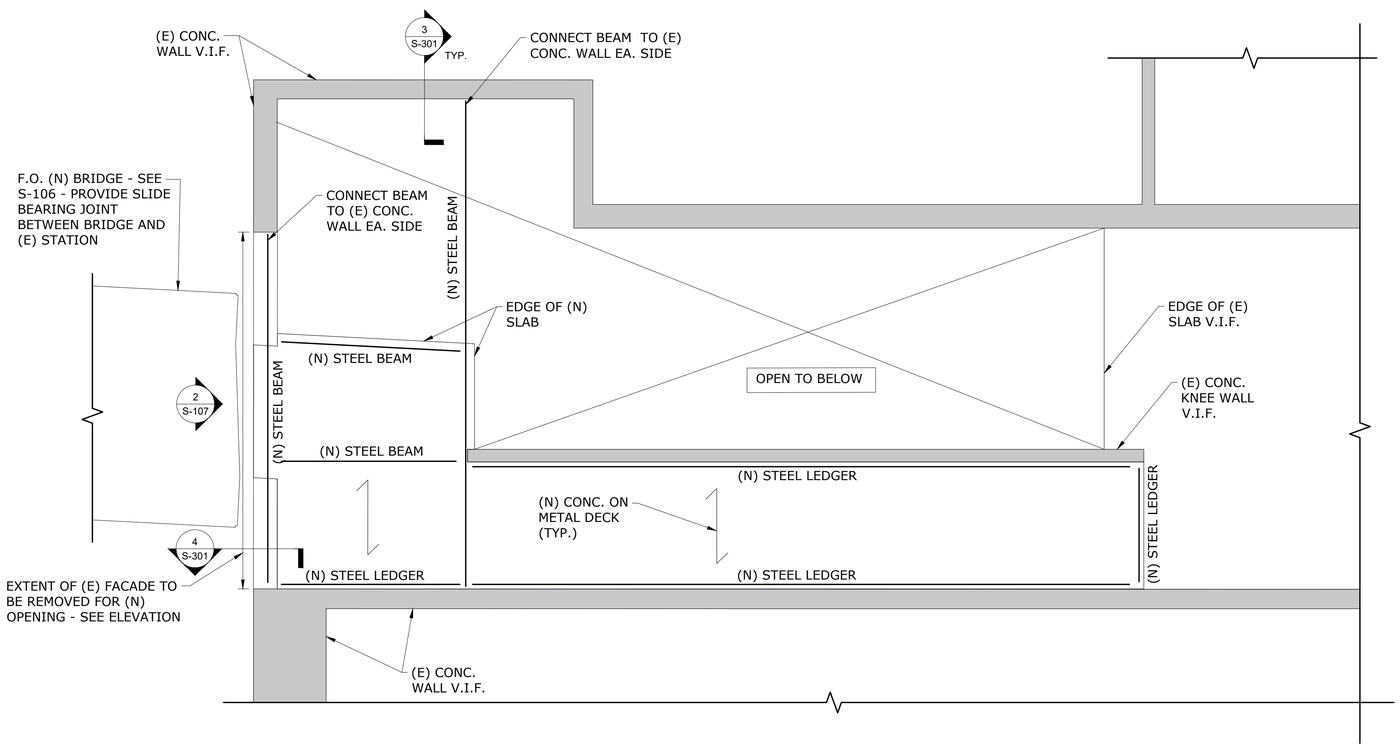

N

1 S-107 (E) STATION CONCOURSE PARTIAL PLAN

1/4"=1'-0" 0 2' 4' 8'

NOTES:

1.) REFER TO SHEET S-001 FOR GENERAL NOTES.
2.) SEE ARCH. DWGS FOR DIMENSIONS, ELEVATIONS, AND ADDITIONAL INFORMATION.
3.) DESIGN CONCEPT IS BASED ON LIMITED KNOWLEDGE OF EXISTING CONDITIONS. VERIFY ALL CONDITIONS IN FIELD.
4.) REPAIR ANY EXISTING STRUCTURAL ELEMENTS THAT ARE DEEMED TO BE DEFICIENT DURING INSPECTION.

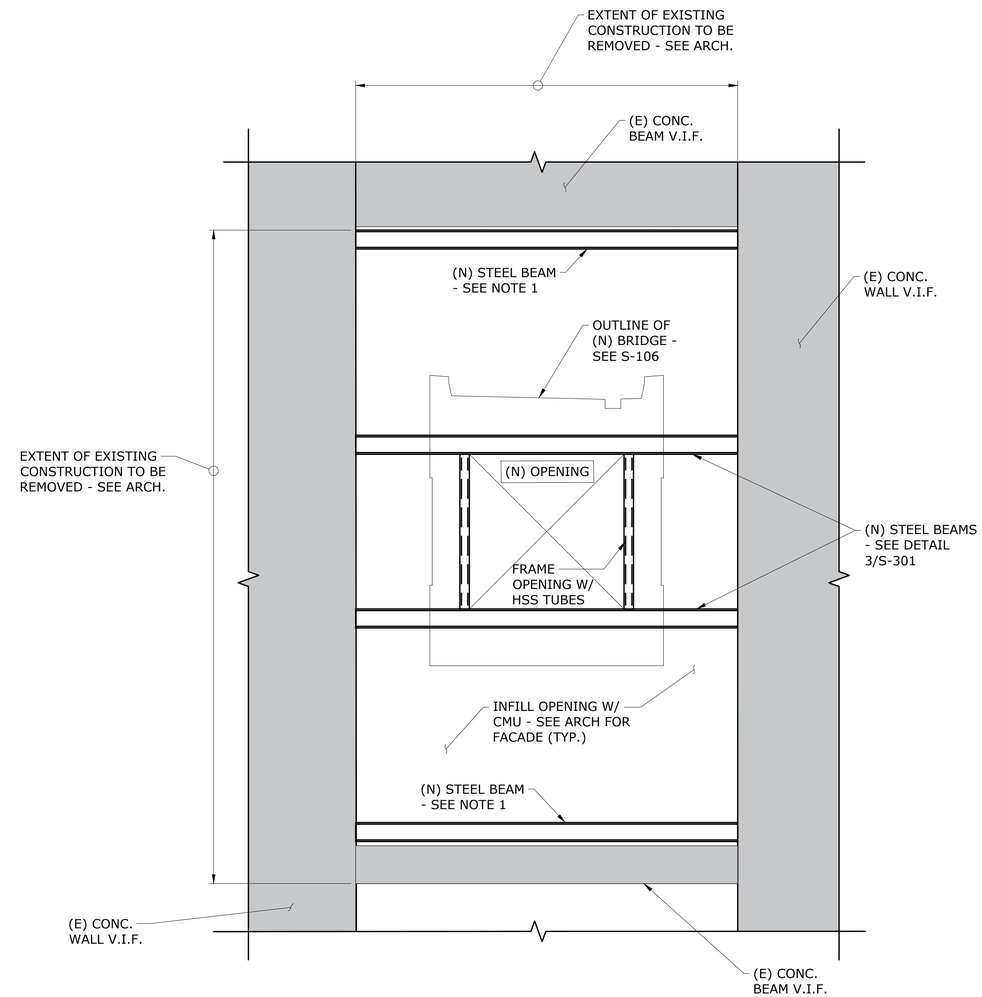

2 S-107 (E) STATION FACADE ELEVATION

1/4"=1'-0" 0 2' 4' 8'

NOTES:

1.) AS AN ALTERNATE TO PROVIDING NEW STEEL BEAMS, THE ADJACENT EXISTING CONCRETE BEAMS MAY BE ANALYZED FOR GRAVITY AND LATERAL LOADS IMPOSED BY NEW CMU WALL INFILL.

DRAFT - NOT FOR BID OR CONSTRUCTION

BASE TECHNICAL CONCEPT PLANS

THIS IS A PROGRESS DRAWING AND IS NOT INTENDED TO BE RELIED UPON BY ANY PARTY AS INDICATING A FINAL DESIGN OR TO BE INTENDED FOR BIDDING OR CONSTRUCTION PURPOSES. THIS PROGRESS DRAWING IS PROVIDED SOLELY FOR INFORMATION WITHOUT REPRESENTATION OR WARRANTY OF ANY KIND. THIS PROGRESS DRAWING HAS NOT BEEN SUBJECT TO A FORMAL QUALITY CONTROL CHECKING PROCESS.

REV.	DATE	REVISION DESCRIPTION	SHEET NO.
-	-	-	-
-	-	-	-
-	-	-	-
-	-	-	-
-	-	-	-
-	-	-	-
-	-	-	-

THE INFORMATION, INCLUDING ESTIMATED QUANTITIES OF WORK, SHOWN ON THESE SHEETS IS BASED ON LIMITED INVESTIGATIONS BY THE STATE AND IS IN NO WAY WARRANTED TO INDICATE THE CONDITIONS OF ACTUAL QUANTITIES OF WORK WHICH WILL BE REQUIRED.

Plotted Date: $DATE$

DESIGNER/DRAFTER: **KS**

CHECKED BY:

SCALE AS NOTED

STATE OF CONNECTICUT
DEPARTMENT OF TRANSPORTATION

Filename: $FILEA$

SIGNATURE/ BLOCK:

STV INC.
225 PARK AVENUE SOUTH
NEW YORK, NY 1003

PROJECT TITLE:

STAMFORD
PARKING GARAGE

TOWN: **STAMFORD**

DRAWING TITLE: **EXISTING STATION RENOVATION PLAN**

PROJECT NO. **301-0047**

DRAWING NO. **S-107**

SHEET NO.

Border Version: 11/14/08

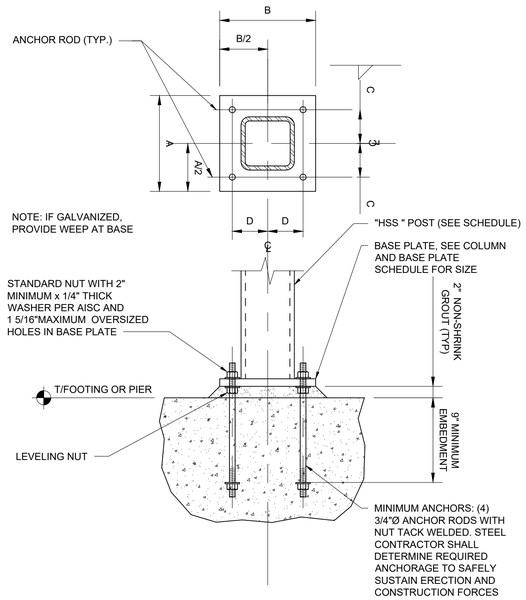

1 S-301 TYP. HSS BASE PLATE DETAIL

NOT TO SCALE

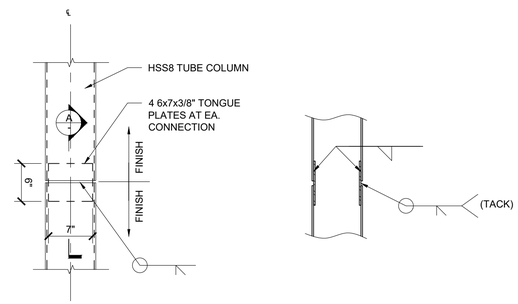

ELEVATION

SECTION-A

2 S-301 TYP. HSS SPLICE DETAIL

NOT TO SCALE

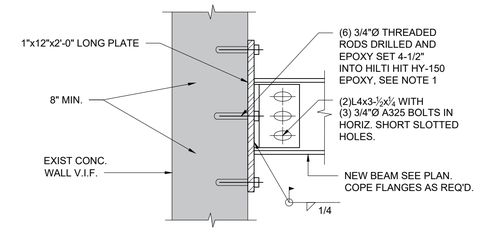

NOTES:

1. CONTRACTOR SHALL FIELD VERIFY LOCATIONS OF ALL EPOXY ANCHORS PRIOR TO FABRICATION OF 1" PLATE. DRILL PILOT HOLE INTO CONC. JOISTS TO DETERMINE IF EPOXY ROD LOCATION IS INTERFERED WITH BY EXIST. REBAR. WHERE REBAR IS LOCATED AT PILOT HOLES, EPOXY ROD AND 1" PLATE SHALL BE MODIFIED AS REQ'D.

3 S-301 TYP. NEW STEEL BEAM TO EXIST. CONC. DETAIL

NOT TO SCALE

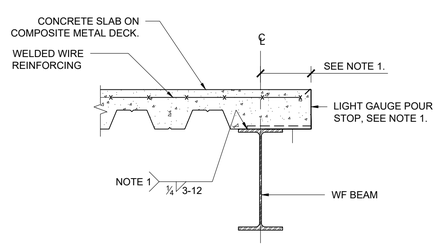

NOTES:

1. WHERE SLAB EDGE DISTANCE EXCEEDS 6", PROVIDE ½" THICK STEEL PLATE WELDED TO WF BEAM FLANGE. WHERE EDGE DISTANCE IS LESS THAN 6", PLATE MAY BE OMITTED AND ONLY LIGHT GAUGE POUR STOP INSTALLED.

4 S-301 TYP. SLAB EDGE DETAIL

NOT TO SCALE

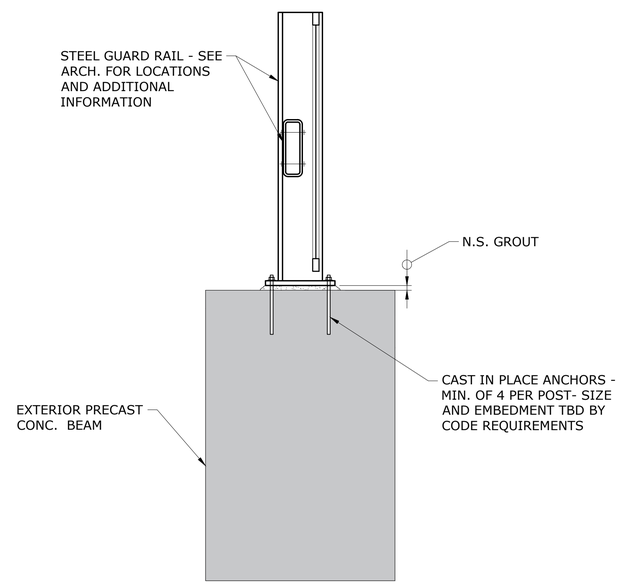

5 S-301 TYP. GUARD RAIL POST DETAIL

1 1/2"=1'-0" 0 1' 1' 6"

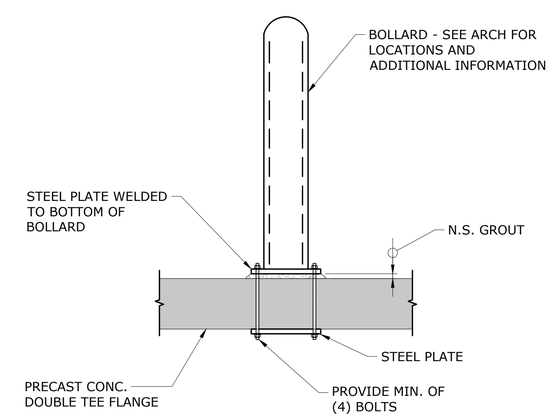

6 S-301 TYP. BOLLARD @ SLAB DETAIL

1 1/2"=1'-0" 0 1' 1' 6"

DRAFT - NOT FOR BID OR CONSTRUCTION

BASE TECHNICAL CONCEPT PLANS

THIS IS A PROGRESS DRAWING AND IS NOT INTENDED TO BE RELIED UPON BY ANY PARTY AS INDICATING A FINAL DESIGN OR TO BE INTENDED FOR BIDDING OR CONSTRUCTION PURPOSES. THIS PROGRESS DRAWING IS PROVIDED SOLELY FOR INFORMATION WITHOUT REPRESENTATION OR WARRANTY OF ANY KIND. THIS PROGRESS DRAWING HAS NOT BEEN SUBJECT TO A FORMAL QUALITY CONTROL CHECKING PROCESS.

REV.	DATE	REVISION DESCRIPTION	SHEET NO.
-	-	-	-
-	-	-	-
-	-	-	-
-	-	-	-
-	-	-	-
-	-	-	-
-	-	-	-

THE INFORMATION, INCLUDING ESTIMATED QUANTITIES OF WORK, SHOWN ON THESE SHEETS IS BASED ON LIMITED INVESTIGATIONS BY THE STATE AND IS IN NO WAY WARRANTED TO INDICATE THE CONDITIONS OF ACTUAL QUANTITIES OF WORK WHICH WILL BE REQUIRED.

Plotted Date: $DATE$

DESIGNER/DRAFTER: **KS**

CHECKED BY:

SCALE AS NOTED

STATE OF CONNECTICUT
DEPARTMENT OF TRANSPORTATION

Filename: $FILEA$

SIGNATURE/ BLOCK:

STV INC.
225 PARK AVENUE SOUTH
NEW YORK, NY 1003

PROJECT TITLE:

STAMFORD
PARKING GARAGE

TOWN: **STAMFORD**

DRAWING TITLE: **SECTIONS AND DETAILS**

PROJECT NO. **301-0047**

DRAWING NO. **S-301**

SHEET NO.

Border Version: 11/14/08

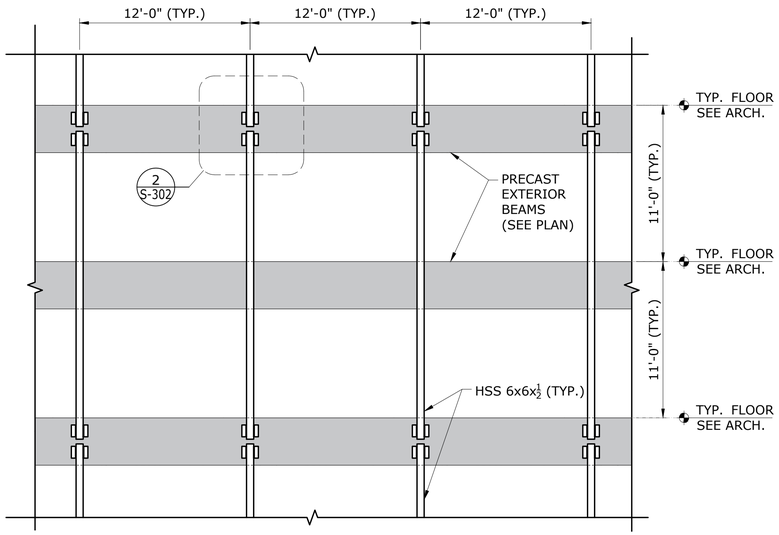

1 S-302 TYPICAL ELEVATION OF FACADE STEEL
3/16"=1'-0"

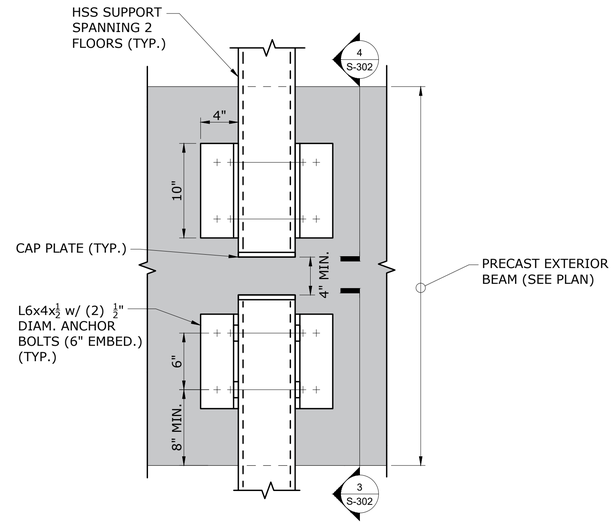

2 S-302 TYP. CONNECTION DETAIL
1 1/2"=1'-0"

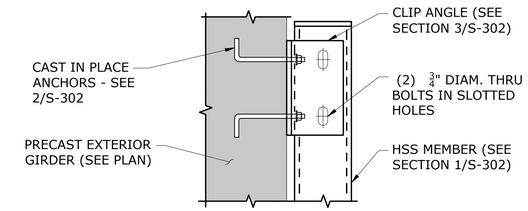

3 S-302 HSS TOP CONNECTION
1 1/2"=1'-0"

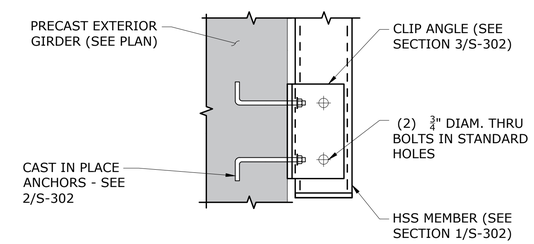

4 S-302 HSS BOTTOM CONNECTION
1 1/2"=1'-0"

FACADE NOTES:

1.) FAÇADE NOT SHOWN IN SECTIONS FOR CLARITY.
2.) SEE ARCH. FOR FAÇADE INFORMATION INCLUDING LOCATIONS OF DIFFERENT FAÇADE TYPES, HORIZONTAL FRAMING SPACING REQUIREMENTS, DIMENSIONS, AND ELEVATIONS.
3.) ALL FAÇADE STEEL TO BE HOT DIPPED GALVANIZED.
4.) CONNECTIONS AT GLASS FAÇADE AND ANY OTHER VISIBLE LOCATION TO BE WELDED.
5.) ALL SHEAR CONNECTIONS TO BE DESIGNED FOR V_U= 15K
6.) FOR CONNECTIONS TO PRECAST CONCRETE WALL THAT DIFFER FROM TYPICAL DETAIL, PROVIDE DETAIL OF SIMILAR NATURE FOR V_U=8K & T_U=8K
7.) REFER TO SHEET S-301 FOR TYPICAL HSS SPLICE AND BASE PLATE DETAIL.

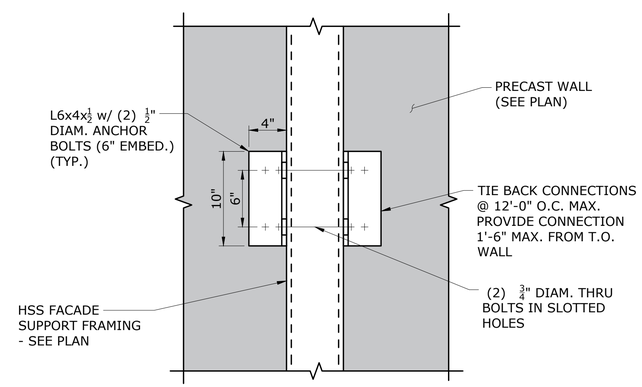

5 S-302 FACADE POST TYPICAL DETAIL
1 1/2"=1'-0"

DRAFT - NOT FOR BID OR CONSTRUCTION

BASE TECHNICAL CONCEPT PLANS

THIS IS A PROGRESS DRAWING AND IS NOT INTENDED TO BE RELIED UPON BY ANY PARTY AS INDICATING A FINAL DESIGN OR TO BE INTENDED FOR BIDDING OR CONSTRUCTION PURPOSES. THIS PROGRESS DRAWING IS PROVIDED SOLELY FOR INFORMATION WITHOUT REPRESENTATION OR WARRANTY OF ANY KIND. THIS PROGRESS DRAWING HAS NOT BEEN SUBJECT TO A FORMAL QUALITY CONTROL CHECKING PROCESS.

REV.	DATE	REVISION DESCRIPTION	SHEET NO.
-	-	-	-
-	-	-	-
-	-	-	-
-	-	-	-
-	-	-	-
-	-	-	-
-	-	-	-

THE INFORMATION, INCLUDING ESTIMATED QUANTITIES OF WORK, SHOWN ON THESE SHEETS IS BASED ON LIMITED INVESTIGATIONS BY THE STATE AND IS IN NO WAY WARRANTED TO INDICATE THE CONDITIONS OF ACTUAL QUANTITIES OF WORK WHICH WILL BE REQUIRED.

Plotted Date: $DATE$

DESIGNER/DRAFTER: **KS**

CHECKED BY:

SCALE AS NOTED

STATE OF CONNECTICUT
DEPARTMENT OF TRANSPORTATION

Filename: $FILEA$

SIGNATURE/ BLOCK:

STV INC.
225 PARK AVENUE SOUTH
NEW YORK, NY 1003

PROJECT TITLE:

STAMFORD
PARKING GARAGE

TOWN: **STAMFORD**

DRAWING TITLE: **FACADE DETAILS**

PROJECT NO. **301-0047**

DRAWING NO. **S-302**

SHEET NO.

Border Version: 11/14/08