03 - CIVIL
COVER SHEET

DRAWING NUMBER	DRAWING TITLE	DRAWING NUMBER	DRAWING TITLE
IND-001	CIVIL INDEX OF DRAWINGS	XSC-002	CRITICAL SECTIONS *
EXT-001	EXISTING SURVEY PLAN	XSC-003	CRITICAL SECTIONS *
EXT-002	PHOTOGRAMMETRIC SURVEY PLAN	XSC-004	CRITICAL SECTIONS *
EXT-003	EXISTING RIGHTS-OF-WAY PLAN	XSC-005	CRITICAL SECTIONS *
CIV-001	OVERALL SITE PLAN		
CIV-002	ENLARGED SITE PLAN		
CIV-003	ENLARGED SITE PLAN		
CIV-004	SITE WALL SHEET 1 OF 3		
CIV-005	SITE WALL SHEET 2 OF 3		
CIV-006	SITE WALL SHEET 3 OF 3		
TYP-001	TYPICAL SECTIONS		
TYP-002	TYPICAL SECTIONS		
TYP-003	TYPICAL SECTIONS		
BSL-001	BASELINE LAYOUT PLAN		
GRD-001	GRADING & DRAINAGE PLAN		
GRD-002	GRADING & DRAINAGE PLAN		
UTL-001	UTILITY PLAN		
PRO-001	SOUTH STATE STREET PROFILE		
PRO-002	INNER GARAGE DRIVEWAY & RAILROAD ACCESS PROFILES		
XSC-001	CRITICAL SECTIONS *		

* NOT INCLUDED IN DRAFT PLANS

DRAFT - NOT FOR BID OR CONSTRUCTION

BASE TECHNICAL CONCEPT PLANS

THIS IS A PROGRESS DRAWING AND IS NOT INTENDED TO BE RELIED UPON BY ANY PARTY AS INDICATING A FINAL DESIGN OR TO BE INTENDED FOR BIDDING OR CONSTRUCTION PURPOSES. THIS PROGRESS DRAWING IS PROVIDED SOLELY FOR INFORMATION WITHOUT REPRESENTATION OR WARRANTY OF ANY KIND. THIS PROGRESS DRAWING HAS NOT BEEN SUBJECT TO A FORMAL QUALITY CONTROL CHECKING PROCESS.

REV.	DATE	REVISION DESCRIPTION	SHEET NO.
-	-	-	-
-	-	-	-
-	-	-	-
-	-	-	-
-	-	-	-
-	-	-	-

THE INFORMATION, INCLUDING ESTIMATED QUANTITIES OF WORK, SHOWN ON THESE SHEETS IS BASED ON LIMITED INVESTIGATIONS BY THE STATE AND IS IN NO WAY WARRANTED TO INDICATE THE CONDITIONS OF ACTUAL QUANTITIES OF WORK WHICH WILL BE REQUIRED.

Plotted Date: 4/10/2020

DESIGNER/DRAFTER: **PRP**

CHECKED BY: **PRP**

SCALE AS NOTED

STATE OF CONNECTICUT
DEPARTMENT OF TRANSPORTATION

Filename: ...\FD_MSH_IDX_0301_0047.dgn

SIGNATURE/ BLOCK:

CHA
200 Corporate Place, Suite 110
Rocky Hill, CT 06067
860.257.4557 - www.chacompanies.com

PROJECT TITLE: **STAMFORD PARKING GARAGE**

TOWN: **STAMFORD**

DRAWING TITLE: **CIVIL INDEX OF DRAWINGS**

PROJECT NO. **301-0047**

DRAWING NO. **IND-001**

SHEET NO.

NOTES:

1.) SURVEY BY DISTRICT3 SURVEYS, SEPTEMBER 2013

2.) FIELD BOOKS 135-300 pgs 35-79 & 301-0047A pgs 1-20

3.) 400 . FOOT GRID BASED ON CONNECTICUT COORDINATE SYSTEM N. A. D. 1983

4.) VERTICAL DATUM BASED ON N.A.V.D 1988

5.) UNDERGROUND UTILITIES SHOWN ARE BASED ON FIELD INVESTIGATION AND COMPANY RECORDS, LOCATIONS ARE APPROXIMATE.

ELECTRIC.....CONNECTICUT LIGHT & POWER
FIBER OPTICS.....FIBERTECH NETWORKS LLC
GAS.....YANKEEGAS COMPANY
TELEPHONE.....AT&T
TELEVISION.....CABLEVISION
WATER.....AQUARION WATER COMPANY OF CONNECTICUT

6.) RAILROAD PROPERTY LINES, CURVE DATA, AND MONUMENTED RAILROAD CENTERLINE STATIONING SHOWN ARE TAKEN FROM RAILROAD VALUATION MAPS DATED MAY 1910.

REVISIONS			
NO.	DATE	DESCRIPTION	REV. BY
1	06-12-19	UPDATE DRAINAGE	RRC
2	07-18-19	Update Topography	RRC
3	08-21-19	Update Topography	RRC
-	-	-	
-	-	-	
-	-	-	

STATE OF CONNECTICUT
DEPARTMENT OF TRANSPORTATION
STAMFORD RAILROAD STATION
WASHINGTON BVLD & ALANTIC ST.
IN THE TOWN OF
STAMFORD

PROJECT NO. 301-0047

SCALE IN FEET
40 0 40 80

SURVEYED BY: HAMM
PLOTTED BY: CARLSON
CHECKED BY: ZOMBAR
FILE: SV D3 3010047 STAMFORD RR STATION GRN.dgn

DEC 2013

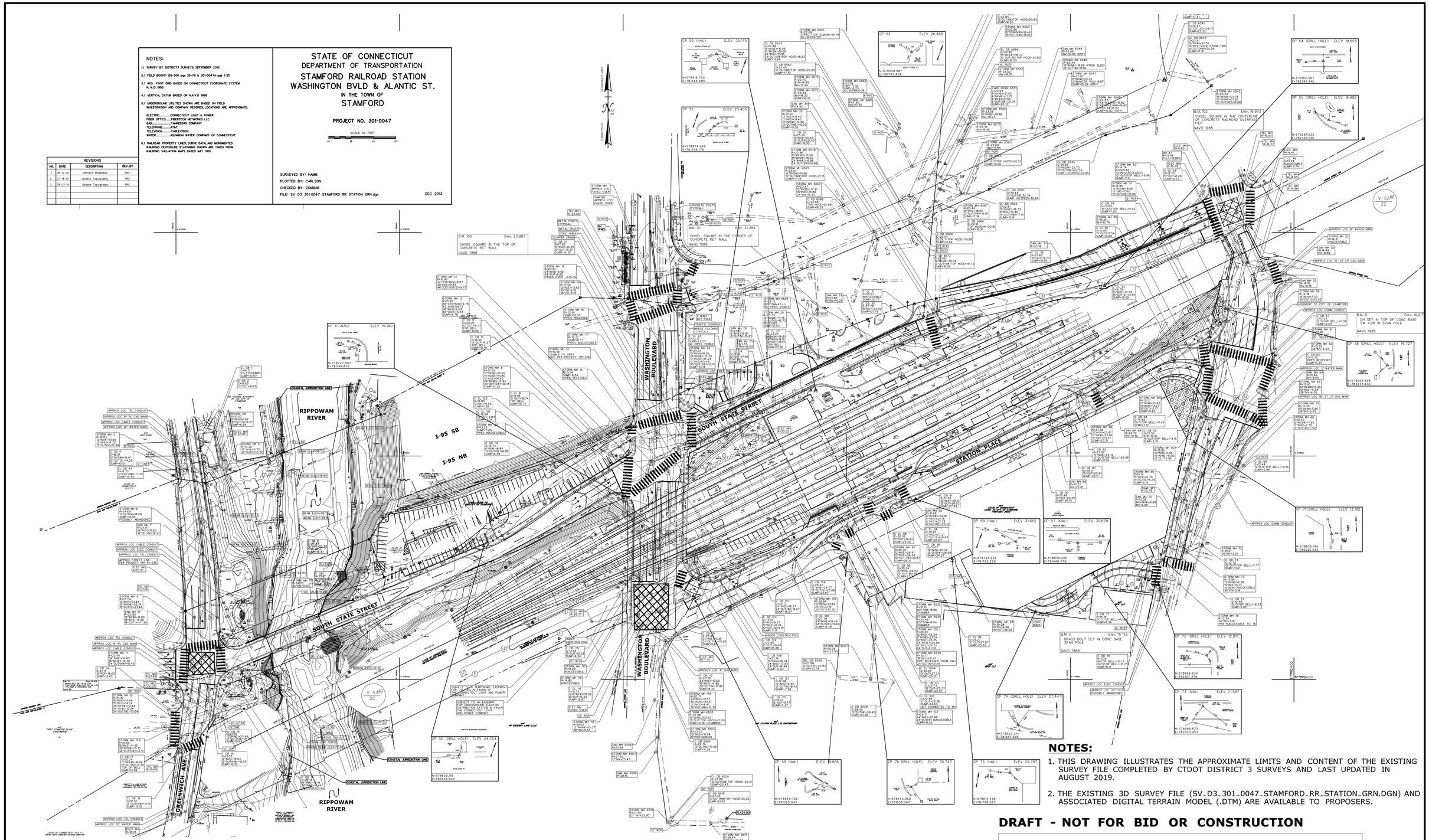

NOTES:

1. THIS DRAWING ILLUSTRATES THE APPROXIMATE LIMITS AND CONTENT OF THE EXISTING SURVEY FILE COMPLETED BY CTDOT DISTRICT 3 SURVEYS AND LAST UPDATED IN AUGUST 2019.
2. THE EXISTING 3D SURVEY FILE (SV_D3_301_0047_STAMFORD_RR_STATION_GRN.DGN) AND ASSOCIATED DIGITAL TERRAIN MODEL (.DTM) ARE AVAILABLE TO PROPOSERS.

DRAFT - NOT FOR BID OR CONSTRUCTION

BASE TECHNICAL CONCEPT PLANS

THIS IS A PROGRESS DRAWING AND IS NOT INTENDED TO BE RELIED UPON BY ANY PARTY AS INDICATING A FINAL DESIGN OR TO BE INTENDED FOR BIDDING OR CONSTRUCTION PURPOSES. THIS PROGRESS DRAWING IS PROVIDED SOLELY FOR INFORMATION WITHOUT REPRESENTATION OR WARRANTY OF ANY KIND. THIS PROGRESS DRAWING HAS NOT BEEN SUBJECT TO A FORMAL QUALITY CONTROL CHECKING PROCESS.

REV.	DATE	REVISION DESCRIPTION	SHEET NO.
-	-	-	-
-	-	-	-
-	-	-	-
-	-	-	-
-	-	-	-
-	-	-	-

THE INFORMATION, INCLUDING ESTIMATED QUANTITIES OF WORK, SHOWN ON THESE SHEETS IS BASED ON LIMITED INVESTIGATIONS BY THE STATE AND IS IN NO WAY WARRANTED TO INDICATE THE CONDITIONS OF ACTUAL QUANTITIES OF WORK WHICH WILL BE REQUIRED.

Plotted Date: 4/10/2020

DESIGNER/DRAFTER: **SJM**
CHECKED BY: **JP**
SCALE IN FEET 0 80 160
SCALE 1"=80'

STATE OF CONNECTICUT
DEPARTMENT OF TRANSPORTATION

Filename: ...\FD_MSH_EXT_0301_0047.dgn

SIGNATURE/BLOCK:
CHA
200 Corporate Place, Suite 110
Rocky Hill, CT 06067
860.257.4557 - www.chacompanies.com

PROJECT TITLE: **STAMFORD PARKING GARAGE**

TOWN: **STAMFORD**

DRAWING TITLE: **EXISTING SURVEY PLAN**

PROJECT NO. **301-0047**
DRAWING NO. **EXT-001**
SHEET NO.

NOTES:

1. THIS DRAWING ILLUSTRATES THE APPROXIMATE LIMITS AND CONTENT OF THE EXISTING PHOTOGRAMMETRIC SURVEY PLAN COMPLETED BY NOR EAST MAPPING, INC. BASED ON PHOTOGRAMMETRY DATED DECEMBER 2009.
2. THE 2D FILE (SV_MST_135_301_AERIAL.DGN) IS AVAILABLE TO PROPOSERS.
3. THE CIVIL DRAWINGS REFERENCE THIS PHOTOGRAMMETRIC SURVEY INFORMATION TO REPRESENT AREAS NOT COVERED BY THE EXISTING SURVEY (EXT-001).

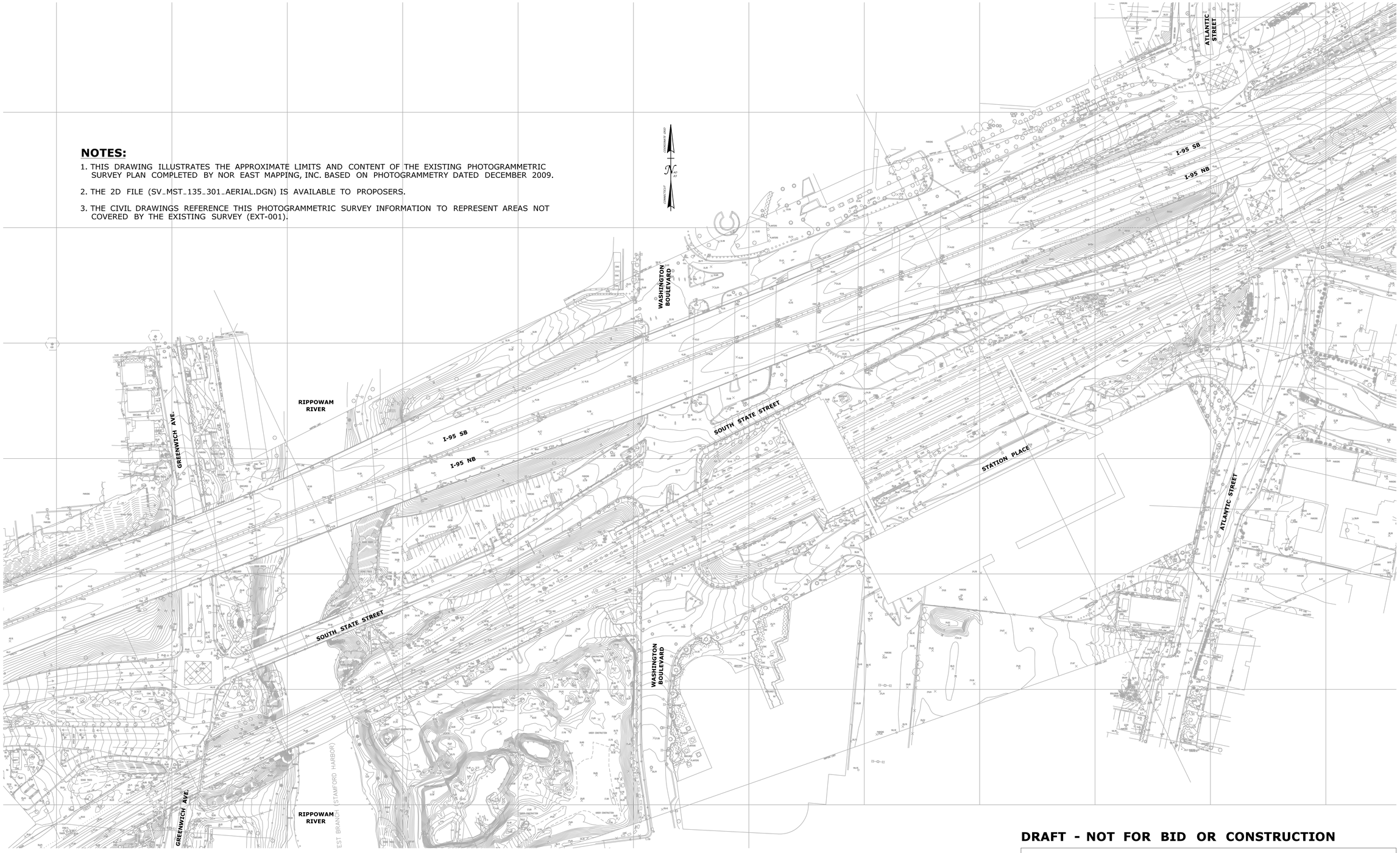

DRAFT - NOT FOR BID OR CONSTRUCTION

BASE TECHNICAL CONCEPT PLANS

THIS IS A PROGRESS DRAWING AND IS NOT INTENDED TO BE RELIED UPON BY ANY PARTY AS INDICATING A FINAL DESIGN OR TO BE INTENDED FOR BIDDING OR CONSTRUCTION PURPOSES. THIS PROGRESS DRAWING IS PROVIDED SOLELY FOR INFORMATION WITHOUT REPRESENTATION OR WARRANTY OF ANY KIND. THIS PROGRESS DRAWING HAS NOT BEEN SUBJECT TO A FORMAL QUALITY CONTROL CHECKING PROCESS.

REV.	DATE	REVISION DESCRIPTION	SHEET NO.
-	-	-	-
-	-	-	-
-	-	-	-
-	-	-	-
-	-	-	-
-	-	-	-

THE INFORMATION, INCLUDING ESTIMATED QUANTITIES OF WORK, SHOWN ON THESE SHEETS IS BASED ON LIMITED INVESTIGATIONS BY THE STATE AND IS IN NO WAY WARRANTED TO INDICATE THE CONDITIONS OF ACTUAL QUANTITIES OF WORK WHICH WILL BE REQUIRED.

Plotted Date: 4/10/2020

DESIGNER/DRAFTER: **SJM**

CHECKED BY: **JP**

SCALE IN FEET 0 80 160

SCALE 1"=80'

STATE OF CONNECTICUT
DEPARTMENT OF TRANSPORTATION

Filename: ...\FD_MSH_EXT_0301_0047.dgn

SIGNATURE/BLOCK:

CHA
200 Corporate Place, Suite 110
Rocky Hill, CT 06067
860.257.4557 - www.chacompanies.com

PROJECT TITLE: **STAMFORD PARKING GARAGE**

TOWN: **STAMFORD**

DRAWING TITLE: **PHOTOGRAMMETRIC SURVEY PLAN**

PROJECT NO. **301-0047**

DRAWING NO. **EXT-002**

SHEET NO.

NOTES:

1. THIS DRAWING HIGHLIGHTS THE EXISTING RIGHTS-OF-WAY IN THE PROJECT AREAS REPRESENTED IN THE EXISTING SURVEY FILE COMPLETED BY CTDOT DISTRICT 3 SURVEYS AND LAST UPDATED IN AUGUST 2019.
2. THE NON-ACCESS HIGHWAY LINE (NAHL) AS SHOWN IS APPROXIMATE BASED ON LOCATION INFORMATION PROVIDED BY CTDOT IN THE REQUEST TO FHWA FOR CONCURRENCE ON RELOCATION OF THE NAHL, DATED JULY 2014 AND IS NOT INCLUDED IN THE EXISTING SURVEY FILE.

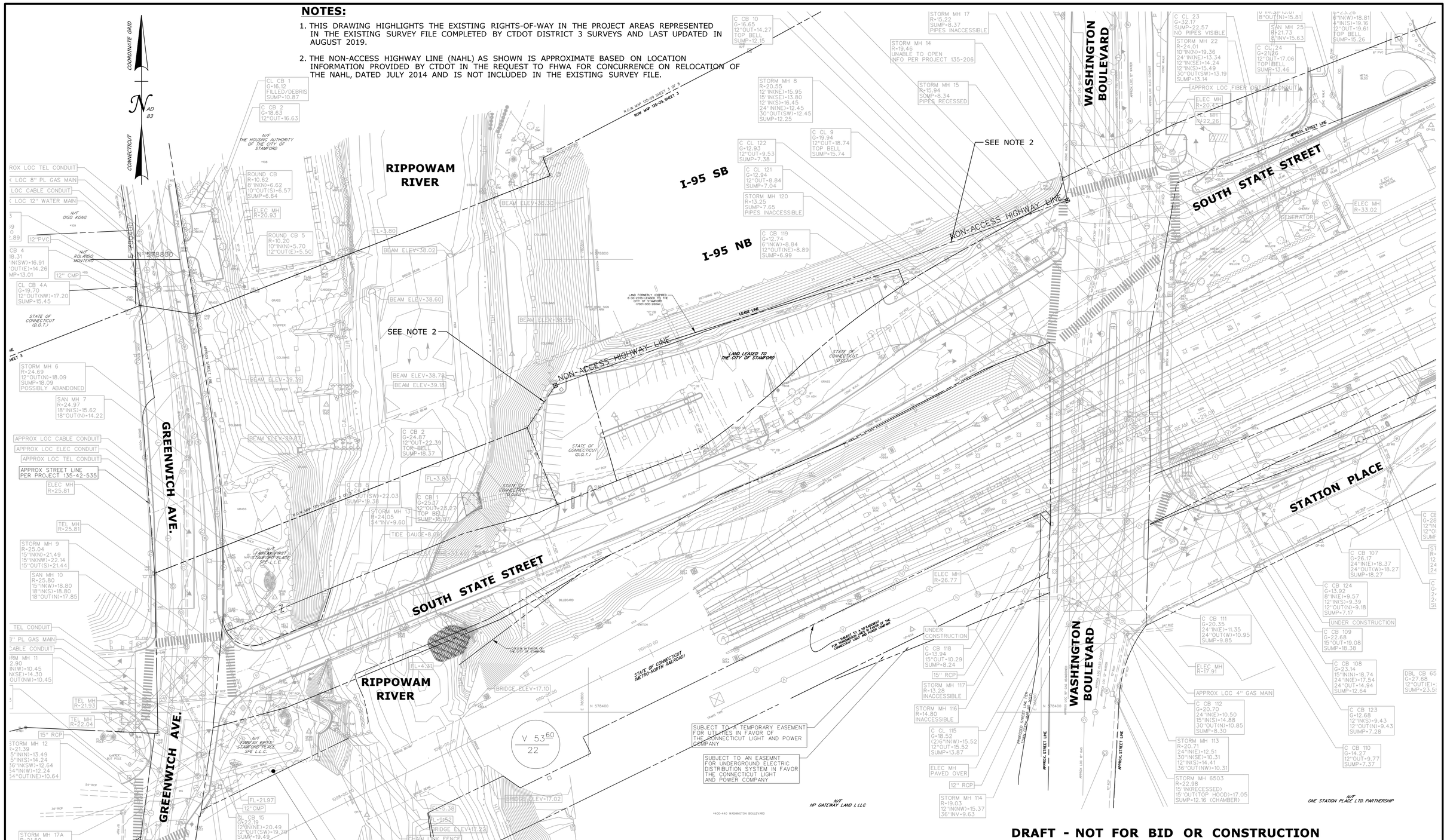

DRAFT - NOT FOR BID OR CONSTRUCTION

BASE TECHNICAL CONCEPT PLANS

THIS IS A PROGRESS DRAWING AND IS NOT INTENDED TO BE RELIED UPON BY ANY PARTY AS INDICATING A FINAL DESIGN OR TO BE INTENDED FOR BIDDING OR CONSTRUCTION PURPOSES. THIS PROGRESS DRAWING IS PROVIDED SOLELY FOR INFORMATION WITHOUT REPRESENTATION OR WARRANTY OF ANY KIND. THIS PROGRESS DRAWING HAS NOT BEEN SUBJECT TO A FORMAL QUALITY CONTROL CHECKING PROCESS.

REV.	DATE	REVISION DESCRIPTION	SHEET NO.
-	-	-	-
-	-	-	-
-	-	-	-
-	-	-	-
-	-	-	-
-	-	-	-

THE INFORMATION, INCLUDING ESTIMATED QUANTITIES OF WORK, SHOWN ON THESE SHEETS IS BASED ON LIMITED INVESTIGATIONS BY THE STATE AND IS IN NO WAY WARRANTED TO INDICATE THE CONDITIONS OF ACTUAL QUANTITIES OF WORK WHICH WILL BE REQUIRED.

Plotted Date: 4/10/2020

DESIGNER/DRAFTER: **SJM**
CHECKED BY: **JP**
SCALE IN FEET 0 40 80
SCALE 1"=40'

STATE OF CONNECTICUT
DEPARTMENT OF TRANSPORTATION

Filename: ...\FD_MSH_EXT_0301_0047.dgn

SIGNATURE/BLOCK:
CHA
200 Corporate Place, Suite 110
Rocky Hill, CT 06067
860.257.4557 - www.chacompanies.com

PROJECT TITLE: **STAMFORD PARKING GARAGE**

TOWN: **STAMFORD**

DRAWING TITLE: **EXISTING RIGHTS-OF-WAY PLAN**

PROJECT NO. **301-0047**
DRAWING NO. **EXT-003**
SHEET NO.

NOTES:

1. SEE DWG. NOS. CIV-002 & CIV-003 FOR ENLARGED SITE PLANS AND ADDITIONAL NOTES.
2. SEE ARCHITECTURAL DWGS. FOR PARKING GARAGE, PEDESTRIAN RAMP TO PLATFORM, AND PEDESTRIAN BRIDGE PLANS AND DETAILS.
3. SEE STRUCTURAL DWGS. FOR SITE WALL PLANS AND DETAILS.

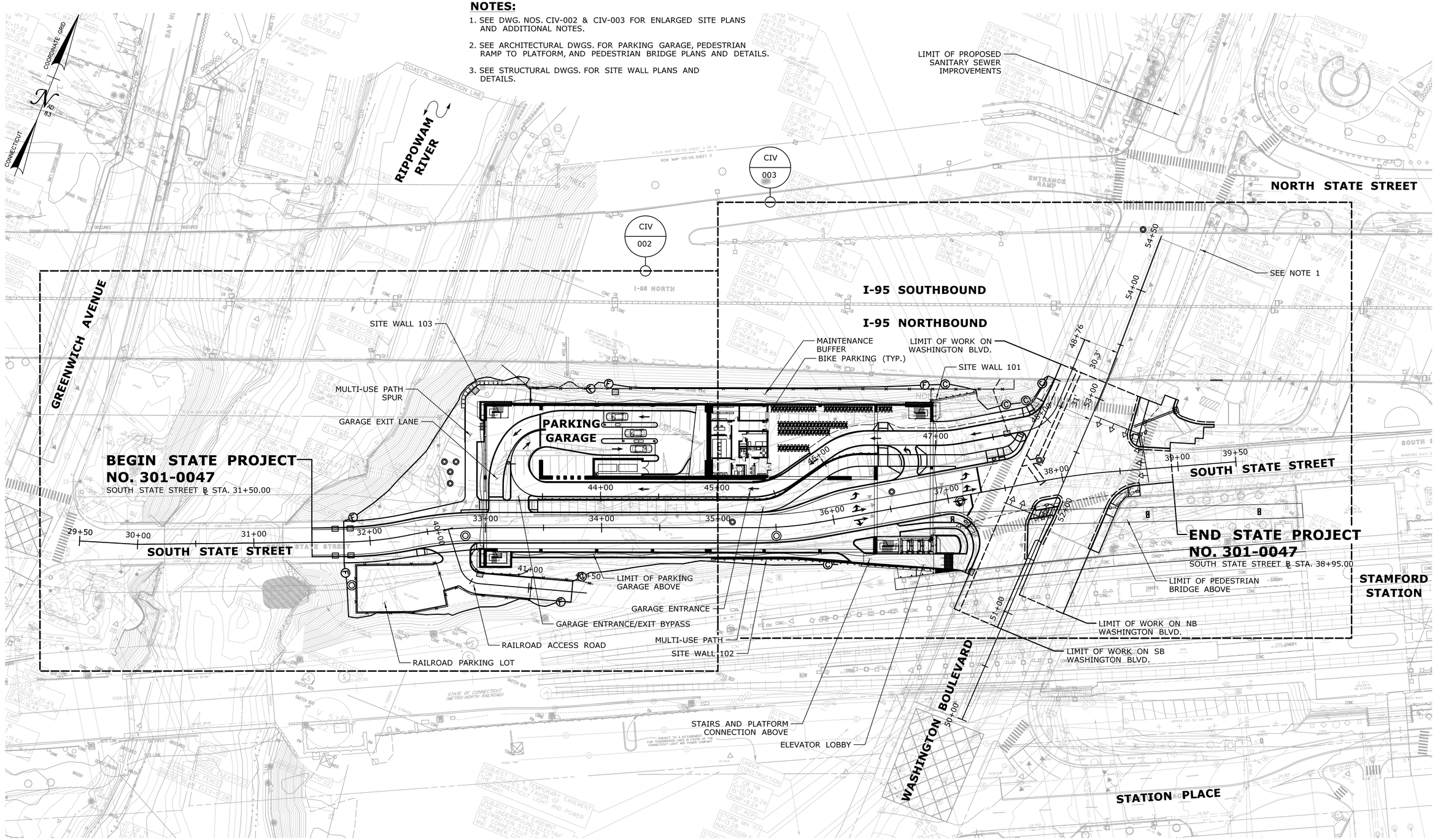

DRAFT - NOT FOR BID OR CONSTRUCTION

BASE TECHNICAL CONCEPT PLANS

THIS IS A PROGRESS DRAWING AND IS NOT INTENDED TO BE RELIED UPON BY ANY PARTY AS INDICATING A FINAL DESIGN OR TO BE INTENDED FOR BIDDING OR CONSTRUCTION PURPOSES. THIS PROGRESS DRAWING IS PROVIDED SOLELY FOR INFORMATION WITHOUT REPRESENTATION OR WARRANTY OF ANY KIND. THIS PROGRESS DRAWING HAS NOT BEEN SUBJECT TO A FORMAL QUALITY CONTROL CHECKING PROCESS.

REV.	DATE	REVISION DESCRIPTION	SHEET NO.
-	-	-	-
-	-	-	-
-	-	-	-
-	-	-	-
-	-	-	-
-	-	-	-

THE INFORMATION, INCLUDING ESTIMATED QUANTITIES OF WORK, SHOWN ON THESE SHEETS IS BASED ON LIMITED INVESTIGATIONS BY THE STATE AND IS IN NO WAY WARRANTED TO INDICATE THE CONDITIONS OF ACTUAL QUANTITIES OF WORK WHICH WILL BE REQUIRED.

Plotted Date: 4/10/2020

DESIGNER/DRAFTER: **PRP**

CHECKED BY: **JP**

SCALE IN FEET 0 40 80

SCALE 1"=40'

STATE OF CONNECTICUT
DEPARTMENT OF TRANSPORTATION

Filename: ...\FD_MSH_CIV_0301_0047.dgn

SIGNATURE/BLOCK:

CHA
200 Corporate Place, Suite 110
Rocky Hill, CT 06067
860.257.4557 - www.chacompanies.com

PROJECT TITLE: **STAMFORD PARKING GARAGE**

TOWN: **STAMFORD**

DRAWING TITLE: **OVERALL SITE PLAN**

PROJECT NO. **301-0047**

DRAWING NO. **CIV-001**

SHEET NO.

NOTES:

1. SEE DWG. NOS. BSL-001 FOR BASELINE LAYOUT INFORMATION.
2. SEE ARCHITECTURAL DWGS. FOR PARKING GARAGE PLANS AND DETAILS.
3. SEE STRUCTURAL DWGS. FOR SITE WALL PLANS AND DETAILS.

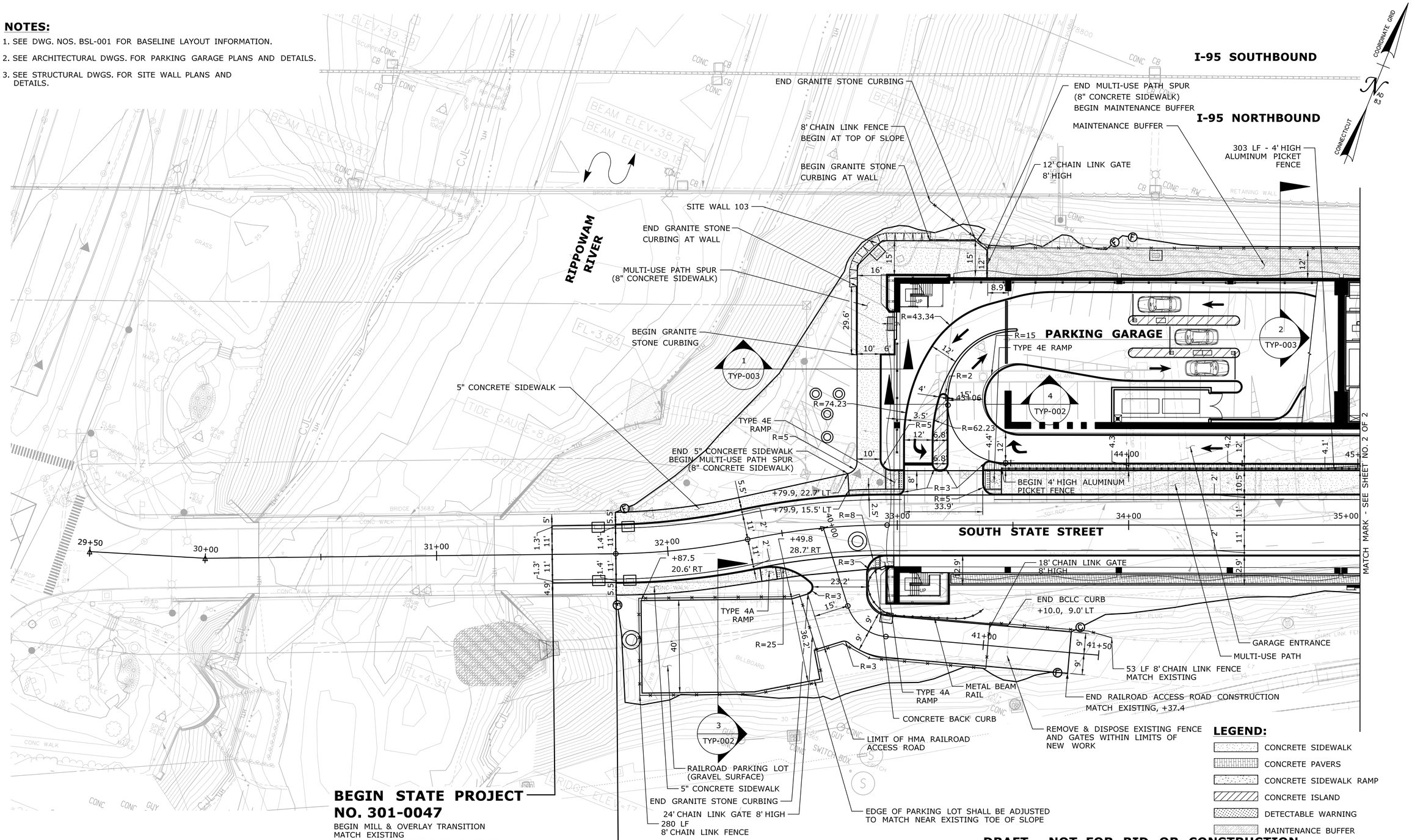

DRAFT - NOT FOR BID OR CONSTRUCTION

BASE TECHNICAL CONCEPT PLANS

THIS IS A PROGRESS DRAWING AND IS NOT INTENDED TO BE RELIED UPON BY ANY PARTY AS INDICATING A FINAL DESIGN OR TO BE INTENDED FOR BIDDING OR CONSTRUCTION PURPOSES. THIS PROGRESS DRAWING IS PROVIDED SOLELY FOR INFORMATION WITHOUT REPRESENTATION OR WARRANTY OF ANY KIND. THIS PROGRESS DRAWING HAS NOT BEEN SUBJECT TO A FORMAL QUALITY CONTROL CHECKING PROCESS.

REV.	DATE	REVISION DESCRIPTION	SHEET NO.
-	-	-	-
-	-	-	-
-	-	-	-
-	-	-	-
-	-	-	-
-	-	-	-

THE INFORMATION, INCLUDING ESTIMATED QUANTITIES OF WORK, SHOWN ON THESE SHEETS IS BASED ON LIMITED INVESTIGATIONS BY THE STATE AND IS IN NO WAY WARRANTED TO INDICATE THE CONDITIONS OF ACTUAL QUANTITIES OF WORK WHICH WILL BE REQUIRED.

Plotted Date: 4/10/2020

DESIGNER/DRAFTER: **PRP**
CHECKED BY: **JP**
SCALE IN FEET 0 20 40
SCALE 1"=20'

STATE OF CONNECTICUT
DEPARTMENT OF TRANSPORTATION

Filename: ...\FD_MSH_CIV_0301_0047.dgn

SIGNATURE/BLOCK:
CHA
200 Corporate Place, Suite 110
Rocky Hill, CT 06067
860.257.4557 - www.chacompanies.com

PROJECT TITLE: **STAMFORD PARKING GARAGE**

TOWN: **STAMFORD**

DRAWING TITLE: **ENLARGED SITE PLAN**

PROJECT NO. **301-0047**
DRAWING NO. **CIV-002**
SHEET NO.

NOTES:

1. PROVIDE A 12 FIBER DROP FROM THE FIBER TERMINATION CABINET AT NORTH STATE STREET TO THE PROPOSED SIGNAL AT SOUTH STATE STREET.
2. THE CONTRACTOR SHALL PROVIDE A PATCH CABLE TO CONNECT THE SOUTH STATE STREET INTERSECTION TO THE FIBER OPTIC NETWORK.
3. THE CONTRACTOR MAY REUSE THE EXISTING FIBER OPTIC SWITCH FOR THE INTERSECTION.
4. THE CONTRACTOR SHALL MAINTAIN THE EXISTING FIBER OPTIC CONNECTION BETWEEN NORTH STATE STREET AND STATION PLACE.
5. SEE DWG NO. BSL-001 FOR BASELINE LAYOUT INFORMATION.
6. SEE ARCHITECTURAL DWGS. FOR PARKING GARAGE, PEDESTRIAN RAMP TO PLATFORM, AND PEDESTRIAN BRIDGE PLANS AND DETAILS.
7. SEE STRUCTURAL DWGS. FOR SITE WALL PLANS AND DETAILS.

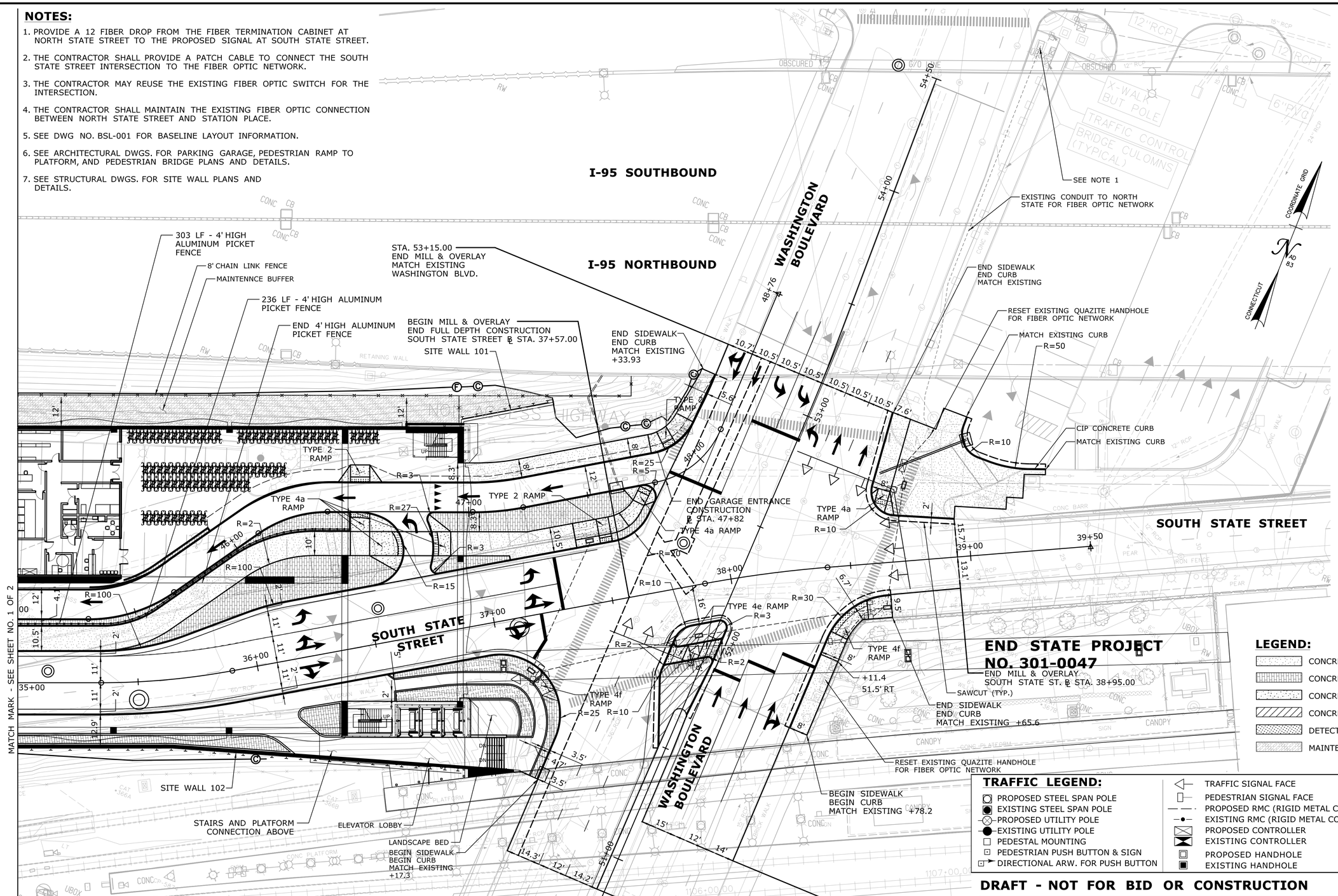

LEGEND:

- CONCRETE SIDEWALK
- CONCRETE PAVERS
- CONCRETE SIDEWALK RAMP
- CONCRETE ISLAND
- DETECTABLE WARNING
- MAINTENANCE BUFFER

TRAFFIC LEGEND:

- PROPOSED STEEL SPAN POLE
- EXISTING STEEL SPAN POLE
- PROPOSED UTILITY POLE
- EXISTING UTILITY POLE
- PEDESTAL MOUNTING
- PEDESTRIAN PUSH BUTTON & SIGN
- DIRECTIONAL ARW. FOR PUSH BUTTON
- TRAFFIC SIGNAL FACE
- PEDESTRIAN SIGNAL FACE
- PROPOSED RMC (RIGID METAL CONDUIT)
- EXISTING RMC (RIGID METAL CONDUIT)
- PROPOSED CONTROLLER
- EXISTING CONTROLLER
- PROPOSED HANDHOLE
- EXISTING HANDHOLE

DRAFT - NOT FOR BID OR CONSTRUCTION

BASE TECHNICAL CONCEPT PLANS

THIS IS A PROGRESS DRAWING AND IS NOT INTENDED TO BE RELIED UPON BY ANY PARTY AS INDICATING A FINAL DESIGN OR TO BE INTENDED FOR BIDDING OR CONSTRUCTION PURPOSES. THIS PROGRESS DRAWING IS PROVIDED SOLELY FOR INFORMATION WITHOUT REPRESENTATION OR WARRANTY OF ANY KIND. THIS PROGRESS DRAWING HAS NOT BEEN SUBJECT TO A FORMAL QUALITY CONTROL CHECKING PROCESS.

REV.	DATE	REVISION DESCRIPTION	SHEET NO.
-	-	-	-
-	-	-	-
-	-	-	-
-	-	-	-
-	-	-	-
-	-	-	-

THE INFORMATION, INCLUDING ESTIMATED QUANTITIES OF WORK, SHOWN ON THESE SHEETS IS BASED ON LIMITED INVESTIGATIONS BY THE STATE AND IS IN NO WAY WARRANTED TO INDICATE THE CONDITIONS OF ACTUAL QUANTITIES OF WORK WHICH WILL BE REQUIRED.

Plotted Date: 4/10/2020

DESIGNER/DRAFTER: **PRP**
CHECKED BY: **JP**
SCALE IN FEET 0 20 40
SCALE 1"=20'

STATE OF CONNECTICUT
DEPARTMENT OF TRANSPORTATION

Filename: ...\FD_MSH_CIV_0301_0047.dgn

SIGNATURE/BLOCK:
CHA
200 Corporate Place, Suite 110
Rocky Hill, CT 06067
860.257.4557 - www.chacompanies.com

PROJECT TITLE: **STAMFORD PARKING GARAGE**

TOWN: **STAMFORD**

DRAWING TITLE: **ENLARGED SITE PLAN**

PROJECT NO. **301-0047**
DRAWING NO. **CIV-003**
SHEET NO.

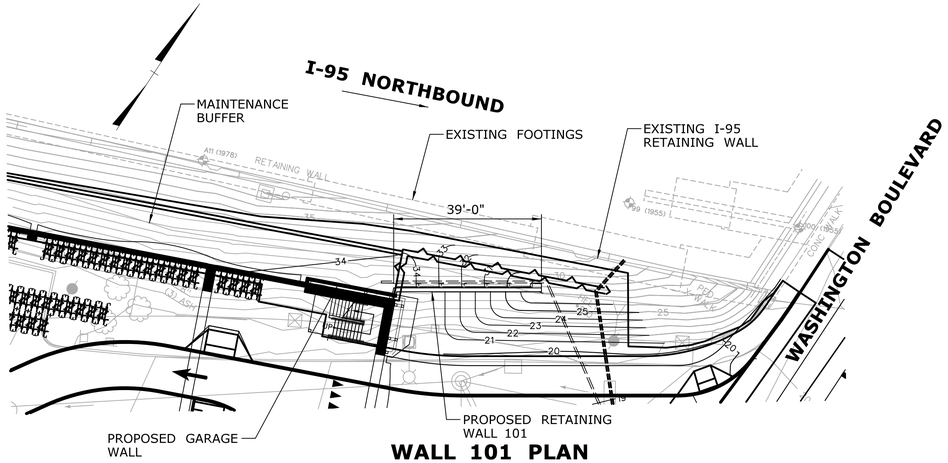

WALL 101 PLAN
SCALE: 1'=20'-0"

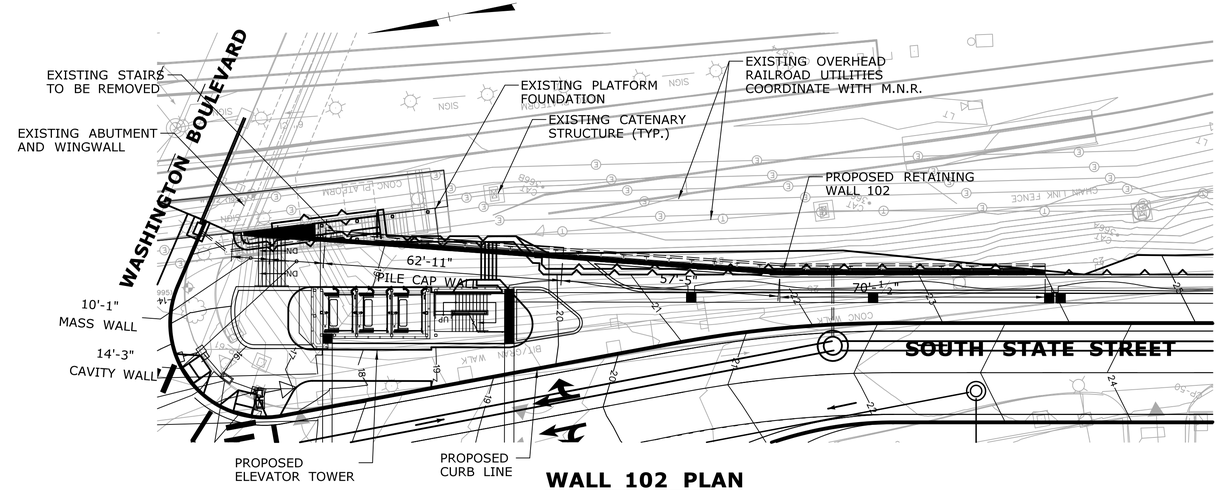

WALL 102 PLAN
SCALE: 1'=20'-0"

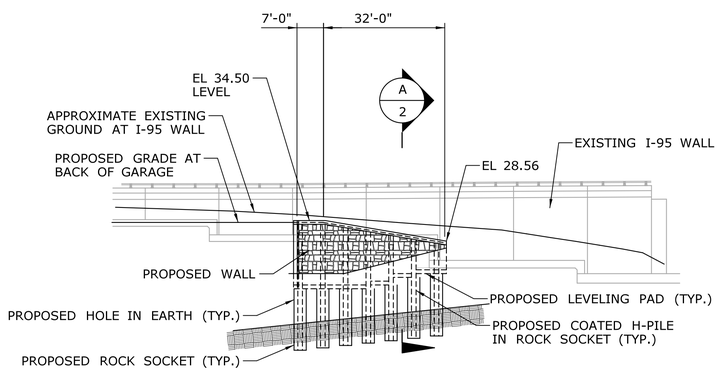

WALL 101 ELEVATION
SCALE: 1'=20'-0"

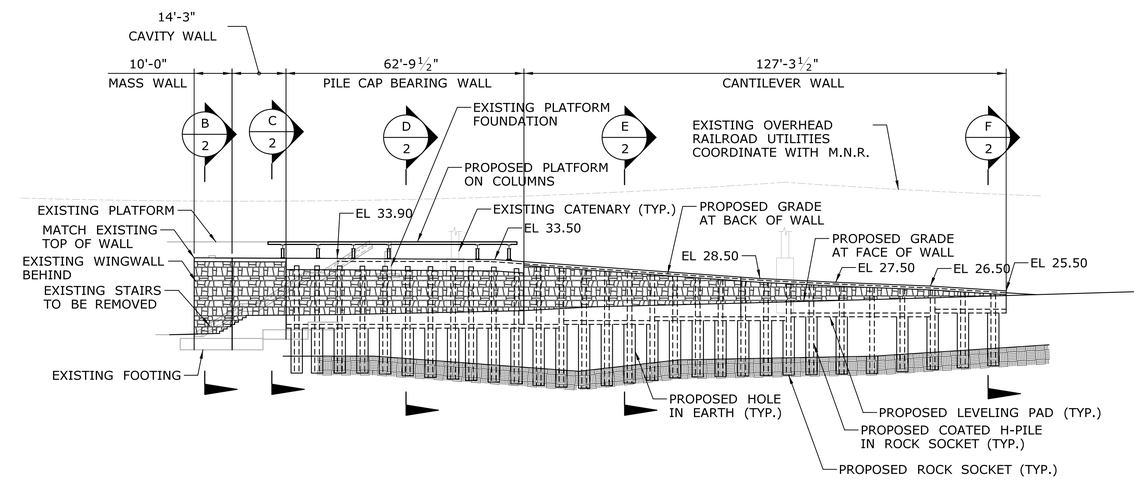

WALL 102 ELEVATION
SCALE: 1'=20'-0"

DESIGN NOTES:

1. SEE DESIGN NOTES SHEET 3.

DRAFT - NOT FOR BID OR CONSTRUCTION

BASE TECHNICAL CONCEPT PLANS

THIS IS A PROGRESS DRAWING AND IS NOT INTENDED TO BE RELIED UPON BY ANY PARTY AS INDICATING A FINAL DESIGN OR TO BE INTENDED FOR BIDDING OR CONSTRUCTION PURPOSES. THIS PROGRESS DRAWING IS PROVIDED SOLELY FOR INFORMATION WITHOUT REPRESENTATION OR WARRANTY OF ANY KIND. THIS PROGRESS DRAWING HAS NOT BEEN SUBJECT TO A FORMAL QUALITY CONTROL CHECKING PROCESS.

REV.	DATE	REVISION DESCRIPTION	SHEET NO.
-	-	-	-
-	-	-	-
-	-	-	-
-	-	-	-
-	-	-	-
-	-	-	-

THE INFORMATION, INCLUDING ESTIMATED QUANTITIES OF WORK, SHOWN ON THESE SHEETS IS BASED ON LIMITED INVESTIGATIONS BY THE STATE AND IS IN NO WAY WARRANTED TO INDICATE THE CONDITIONS OF ACTUAL QUANTITIES OF WORK WHICH WILL BE REQUIRED.

Plotted Date: 4/10/2020

DESIGNER/DRAFTER: **JSP**
CHECKED BY: **CS**
SCALE AS NOTED

STATE OF CONNECTICUT
DEPARTMENT OF TRANSPORTATION

Filename: ...\FD_MSH_0301_0047_Walls-2.dgn

SIGNATURE/BLOCK:
CHA
200 Corporate Place, Suite 110
Rocky Hill, CT 06067
860.257.4557 - www.chacompanies.com

PROJECT TITLE:
STAMFORD STATION PARKING GARAGE

TOWN: **STAMFORD**

DRAWING TITLE: **SITE WALLS SHEET 1 OF 3**

PROJECT NO. **301-0047**
DRAWING NO. **CIV-004**
SHEET NO.

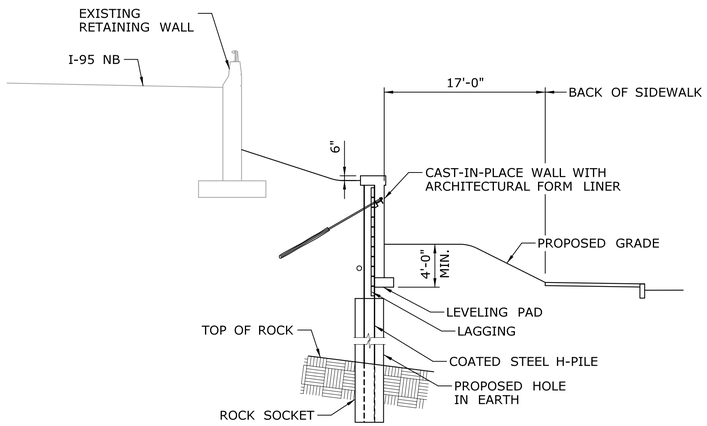

SECTION A
SCALE: 1/8'=1'-0"

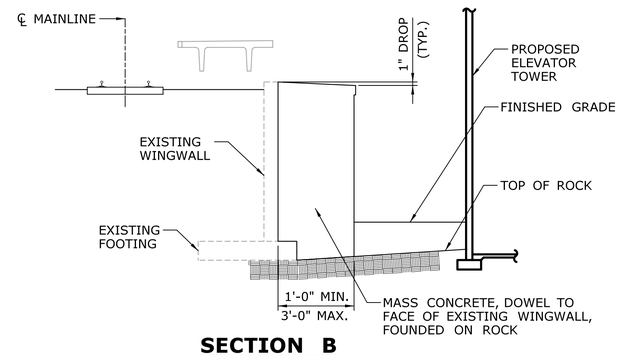

SECTION B
SCALE: 1/8'=1'-0"

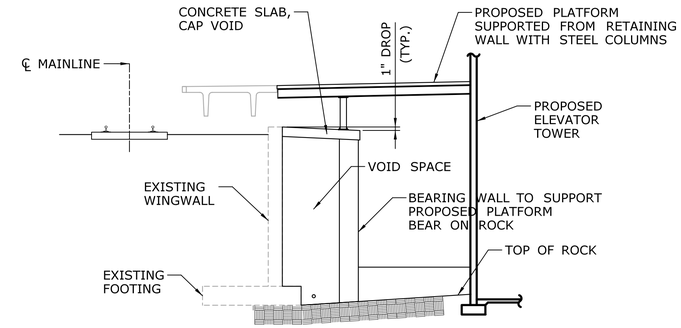

SECTION C
SCALE: 1/8'=1'-0"

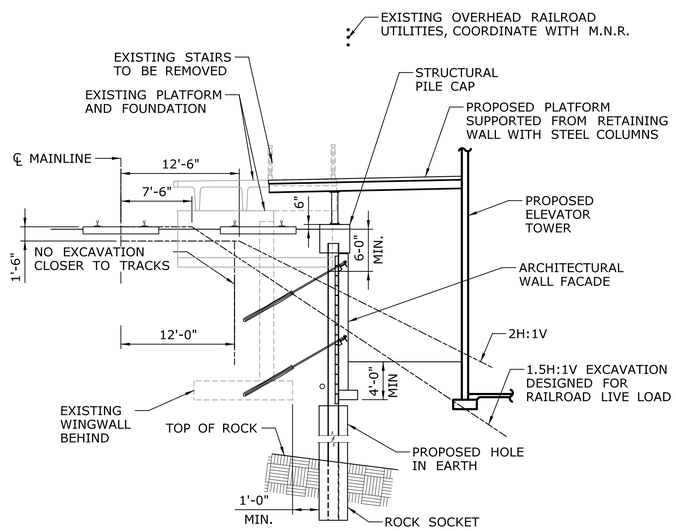

SECTION D
SCALE: 1/8'=1'-0"

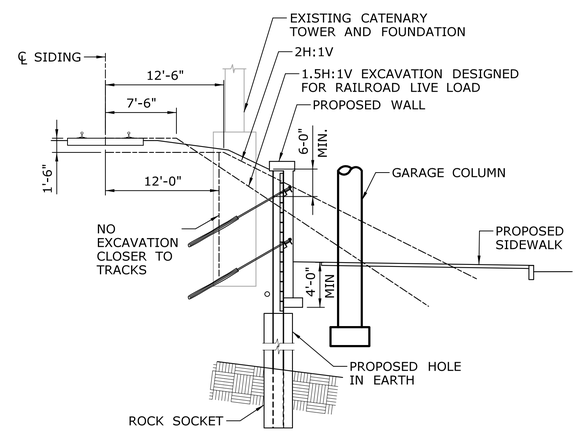

SECTION E
SCALE: 1/8'=1'-0"

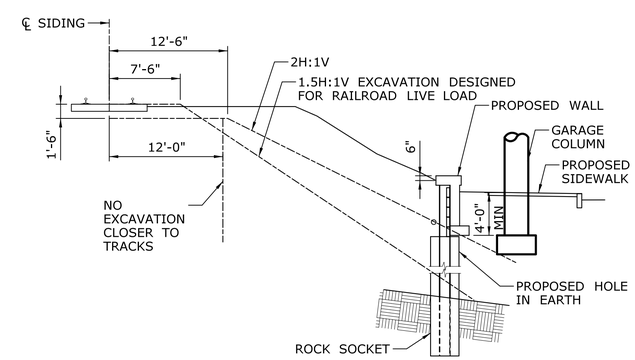

SECTION F
SCALE: 1/8'=1'-0"

DESIGN NOTES:

1. SEE DESIGN NOTES SHEET 3.

DRAFT - NOT FOR BID OR CONSTRUCTION

BASE TECHNICAL CONCEPT PLANS

THIS IS A PROGRESS DRAWING AND IS NOT INTENDED TO BE RELIED UPON BY ANY PARTY AS INDICATING A FINAL DESIGN OR TO BE INTENDED FOR BIDDING OR CONSTRUCTION PURPOSES. THIS PROGRESS DRAWING IS PROVIDED SOLELY FOR INFORMATION WITHOUT REPRESENTATION OR WARRANTY OF ANY KIND. THIS PROGRESS DRAWING HAS NOT BEEN SUBJECT TO A FORMAL QUALITY CONTROL CHECKING PROCESS.

REV.	DATE	REVISION DESCRIPTION	SHEET NO.
-	-	-	-
-	-	-	-
-	-	-	-
-	-	-	-
-	-	-	-
-	-	-	-

THE INFORMATION, INCLUDING ESTIMATED QUANTITIES OF WORK, SHOWN ON THESE SHEETS IS BASED ON LIMITED INVESTIGATIONS BY THE STATE AND IS IN NO WAY WARRANTED TO INDICATE THE CONDITIONS OF ACTUAL QUANTITIES OF WORK WHICH WILL BE REQUIRED.

Plotted Date: 4/10/2020

DESIGNER/DRAFTER: JSP
CHECKED BY: CS
SCALE AS NOTED

STATE OF CONNECTICUT
DEPARTMENT OF TRANSPORTATION

Filename: ...\FD_MSH_0301_0047_Walls-3.dgn

SIGNATURE/BLOCK:
CHA
200 Corporate Place, Suite 110
Rocky Hill, CT 06067
860.257.4557 - www.chacompanies.com

PROJECT TITLE: STAMFORD STATION PARKING GARAGE

TOWN: STAMFORD

DRAWING TITLE: SITE WALLS SHEET 2 OF 3

PROJECT NO. 301-0047
DRAWING NO. CIV-005
SHEET NO.

DESIGN NOTES:

1. ALL WALLS SHALL BE DESIGNED BY THE DESIGN BUILDER ACCORDING TO THE LATEST STATE OF CONNECTICUT BUILDING CODE AT THE TIME OF BID AWARD

2. WALLS SHALL BE DESIGNED FOR A 75 MIN. YEAR DESIGN LIFE. UNDERGROUND CORROSIVE ENVIRONMENTS AND STRAY CURRENTS EXIST. CALCULATIONS OF ALL STRUCTURAL COMPONENTS SHALL INCLUDE A REPORT BY A QUALIFIED CORROSION EXPERT TO DETERMINE THE PROTECTIONS REQUIRED TO PROVIDE THE SERVICE LIFE.

3. THERE ARE EXISTING STRUCTURES BEHIND THE PROPOSED WALLS. THE STRUCTURES INCLUDE I-95 AND RETAINING WALLS, RAILROAD TRACKS, CATENARY STRUCTURES, AND EXISTING BRIDGES. ALL EARTH RETAINING STRUCTURES SHALL BE DESIGNED TO LIMIT DEFORMATIONS OF EXISTING STRUCTURES. SEE DEFORMATION SPECIAL PROVISION FOR REQUIREMENTS AND DEFORMATION LIMITS

4. DEFORMATIONS SHALL BE VERIFIED BY CONSTRUCTION MONITORING. A DEFORMATION MONITORING PLAN IS REQUIRED. SEE DEFORMATION SPECIAL PROVISION FOR DETAILS.

5. ALL WALLS SHALL BE DESIGNED FOR ALL LOADS IMPOSED BY EXISTING STRUCTURES. HIGHWAY LIVE LOADS SHALL BE IN ACCORDANCE WITH AASHTO HL-93. RAILROAD LIVE LOADS SHALL BE IN ACCORDANCE WITH AREMA E80.

6. THE FACE OF WALLS 101 AND 102 SHALL BE FINISHED WITH FORM LINER 1½" CUSTOMROCK #12021 ASHLAR OR APPROVED.

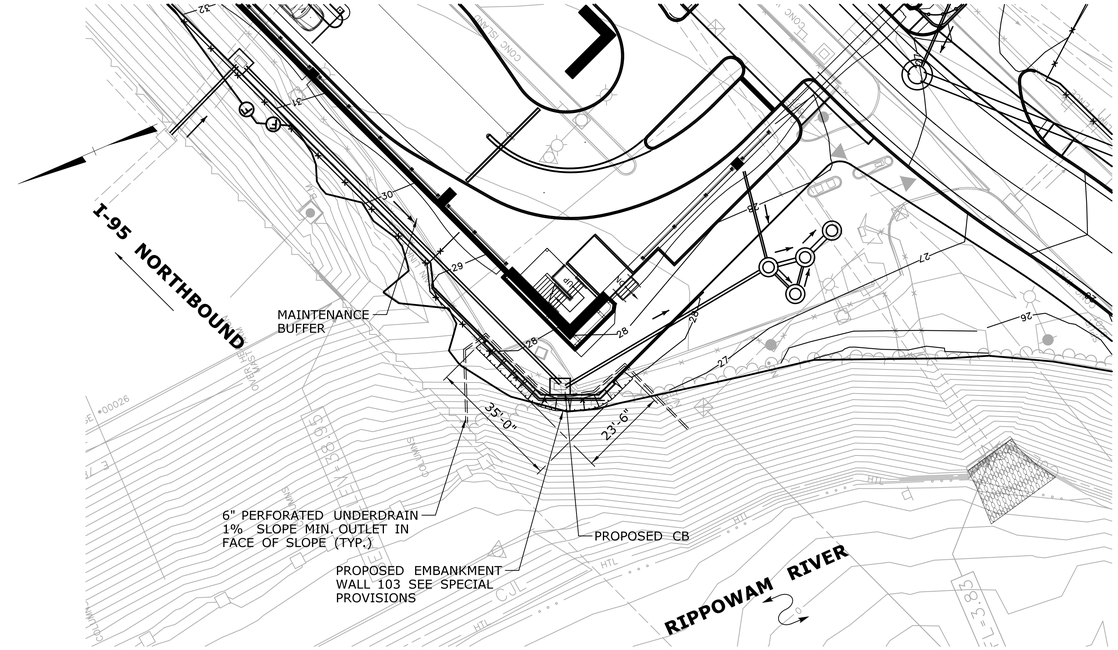

WALL 103 PLAN

SCALE: 1"=20'-0"

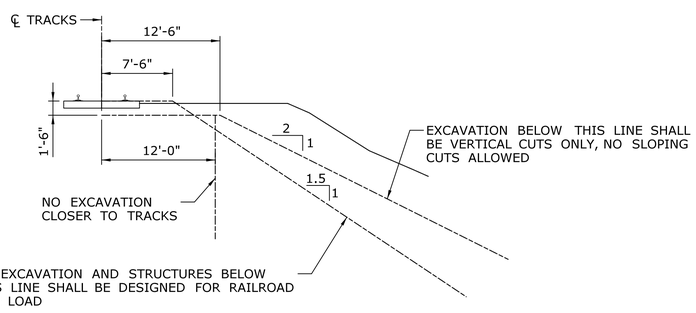

RAILROAD INFLUENCE ZONE

N.T.S.

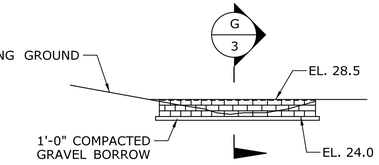

WALL 103 ELEVATION

SCALE: 1"=20'-0"

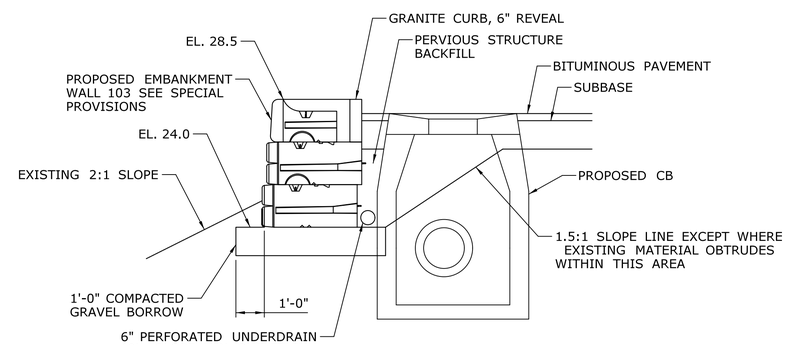

SECTION G

SCALE: ⅜"=1'-0"

DRAFT - NOT FOR BID OR CONSTRUCTION

BASE TECHNICAL CONCEPT PLANS

THIS IS A PROGRESS DRAWING AND IS NOT INTENDED TO BE RELIED UPON BY ANY PARTY AS INDICATING A FINAL DESIGN OR TO BE INTENDED FOR BIDDING OR CONSTRUCTION PURPOSES. THIS PROGRESS DRAWING IS PROVIDED SOLELY FOR INFORMATION WITHOUT REPRESENTATION OR WARRANTY OF ANY KIND. THIS PROGRESS DRAWING HAS NOT BEEN SUBJECT TO A FORMAL QUALITY CONTROL CHECKING PROCESS.

REV.	DATE	REVISION DESCRIPTION	SHEET NO.
-	-	-	-
-	-	-	-
-	-	-	-
-	-	-	-
-	-	-	-
-	-	-	-

THE INFORMATION, INCLUDING ESTIMATED QUANTITIES OF WORK, SHOWN ON THESE SHEETS IS BASED ON LIMITED INVESTIGATIONS BY THE STATE AND IS IN NO WAY WARRANTED TO INDICATE THE CONDITIONS OF ACTUAL QUANTITIES OF WORK WHICH WILL BE REQUIRED.

Plotted Date: 4/10/2020

DESIGNER/DRAFTER: **JSP**

CHECKED BY: **CS**

SCALE IN FEET 0 20 40

SCALE 1"=20'

STATE OF CONNECTICUT
DEPARTMENT OF TRANSPORTATION

Filename: ...\FD_MSH_0301_0047_Walls-4.dgn

SIGNATURE/BLOCK:

CHA
200 Corporate Place, Suite 110
Rocky Hill, CT 06067
860.257.4557 - www.chacompanies.com

PROJECT TITLE: **STAMFORD STATION PARKING GARAGE**

TOWN: **STAMFORD**

DRAWING TITLE: **SITE WALLS SHEET 3 OF 3**

PROJECT NO. **301-0047**

DRAWING NO. **CIV-006**

SHEET NO.

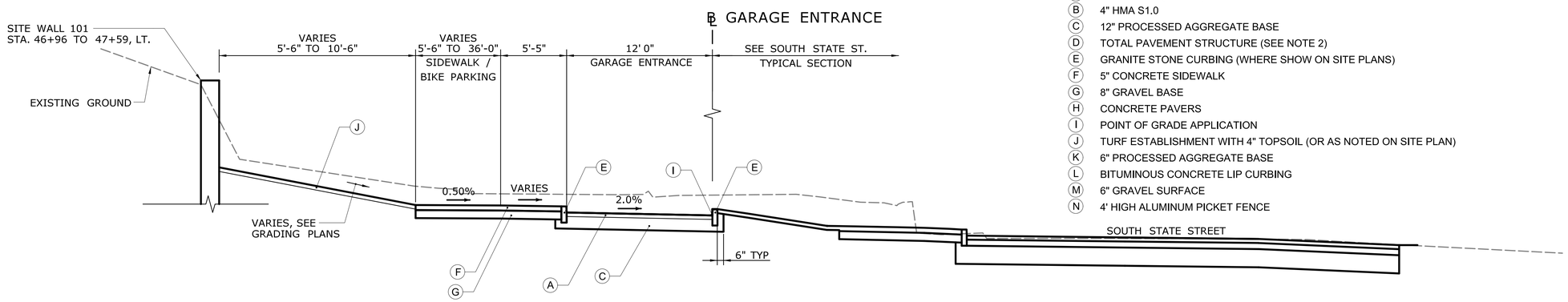

GARAGE ENTRANCE
STA 43+49 TO STA 47+82

LEGEND

- (A) 4" HMA S0.5 (2 LIFTS)
- (B) 4" HMA S1.0
- (C) 12" PROCESSED AGGREGATE BASE
- (D) TOTAL PAVEMENT STRUCTURE (SEE NOTE 2)
- (E) GRANITE STONE CURBING (WHERE SHOW ON SITE PLANS)
- (F) 5" CONCRETE SIDEWALK
- (G) 8" GRAVEL BASE
- (H) CONCRETE PAVERS
- (I) POINT OF GRADE APPLICATION
- (J) TURF ESTABLISHMENT WITH 4" TOPSOIL (OR AS NOTED ON SITE PLAN)
- (K) 6" PROCESSED AGGREGATE BASE
- (L) BITUMINOUS CONCRETE LIP CURBING
- (M) 6" GRAVEL SURFACE
- (N) 4' HIGH ALUMINUM PICKET FENCE

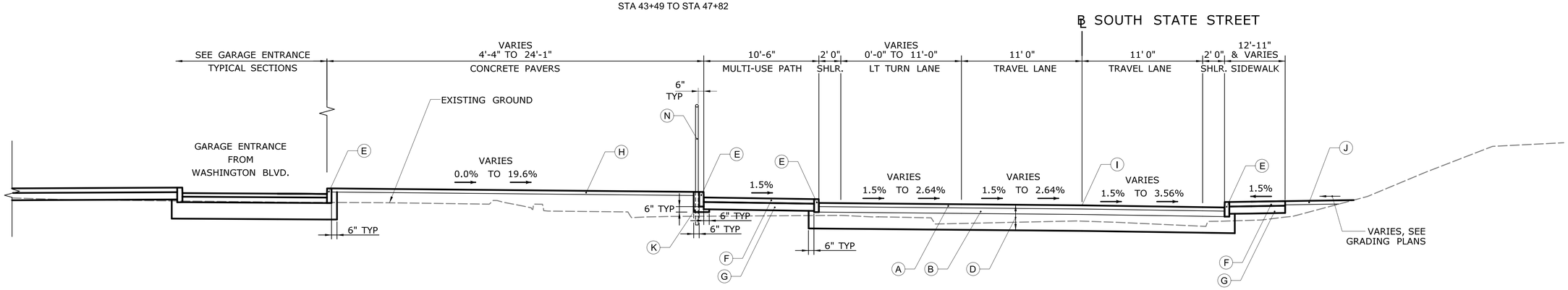

SOUTH STATE STREET
STA 33+00 TO STA 37+75

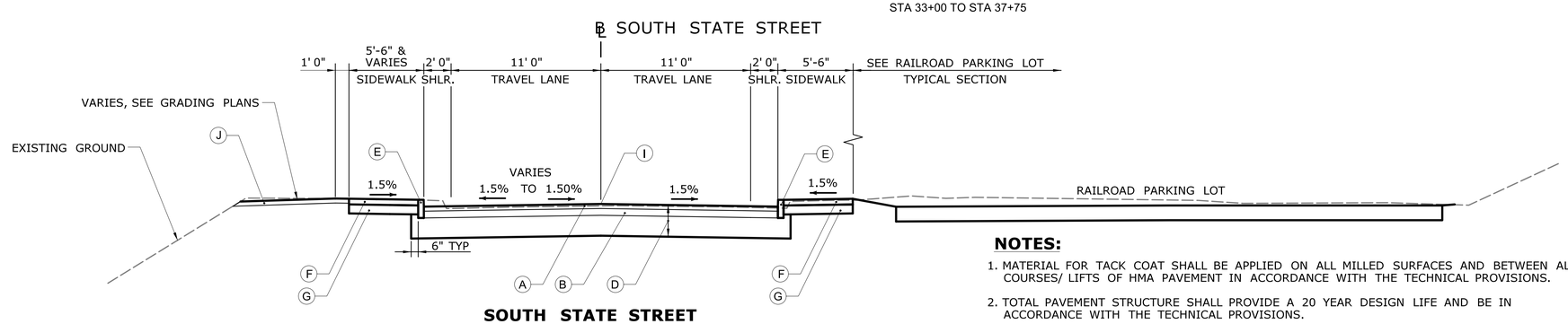

SOUTH STATE STREET
STA 31+50 TO STA 33+00

NOTES:

1. MATERIAL FOR TACK COAT SHALL BE APPLIED ON ALL MILLED SURFACES AND BETWEEN ALL COURSES/ LIFTS OF HMA PAVEMENT IN ACCORDANCE WITH THE TECHNICAL PROVISIONS.
2. TOTAL PAVEMENT STRUCTURE SHALL PROVIDE A 20 YEAR DESIGN LIFE AND BE IN ACCORDANCE WITH THE TECHNICAL PROVISIONS.
3. ALL GRANITE STONE CURBING SHALL HAVE 6" REVEAL UNLESS NOTED OTHERWISE.

DRAFT - NOT FOR BID OR CONSTRUCTION

BASE TECHNICAL CONCEPT PLANS

THIS IS A PROGRESS DRAWING AND IS NOT INTENDED TO BE RELIED UPON BY ANY PARTY AS INDICATING A FINAL DESIGN OR TO BE INTENDED FOR BIDDING OR CONSTRUCTION PURPOSES. THIS PROGRESS DRAWING IS PROVIDED SOLELY FOR INFORMATION WITHOUT REPRESENTATION OR WARRANTY OF ANY KIND. THIS PROGRESS DRAWING HAS NOT BEEN SUBJECT TO A FORMAL QUALITY CONTROL CHECKING PROCESS.

REV.	DATE	REVISION DESCRIPTION	SHEET NO.
-	-	-	-
-	-	-	-
-	-	-	-
-	-	-	-
-	-	-	-
-	-	-	-

THE INFORMATION, INCLUDING ESTIMATED QUANTITIES OF WORK, SHOWN ON THESE SHEETS IS BASED ON LIMITED INVESTIGATIONS BY THE STATE AND IS IN NO WAY WARRANTED TO INDICATE THE CONDITIONS OF ACTUAL QUANTITIES OF WORK WHICH WILL BE REQUIRED.

Plotted Date: 4/10/2020

DESIGNER/DRAFTER: **PRP**
CHECKED BY: **JP**
SCALE IN FEET 0 5 10
SCALE 1"=5'

STATE OF CONNECTICUT
DEPARTMENT OF TRANSPORTATION

Filename: ...\FD_MSH_TYP_0301_0047.dgn

SIGNATURE/ BLOCK:
CHA
200 Corporate Place, Suite 110
Rocky Hill, CT 06067
860.257.4557 • www.chacompanies.com

PROJECT TITLE: **STAMFORD PARKING GARAGE**

TOWN: **STAMFORD**

DRAWING TITLE: **TYPICAL SECTIONS**

PROJECT NO. **301-0047**
DRAWING NO. **TYP-001**
SHEET NO.

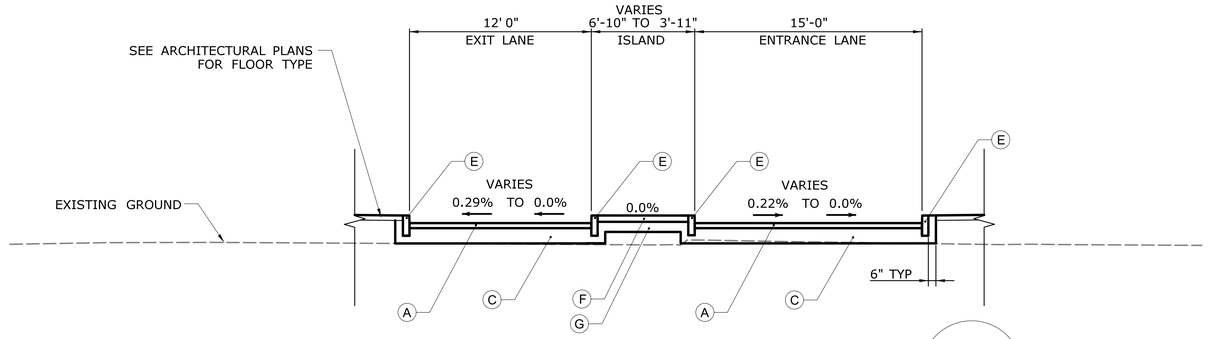

GARAGE DRIVEWAY AT SOUTH STATE STREET 4 / CIV-002

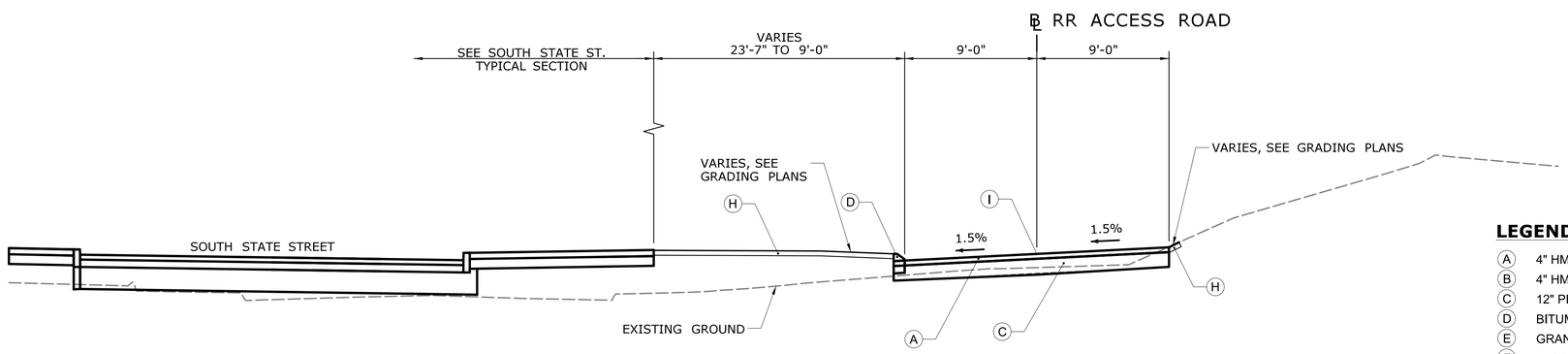

RAILROAD ACCESS ROAD
STA 40+13.00 TO STA 41+37.37

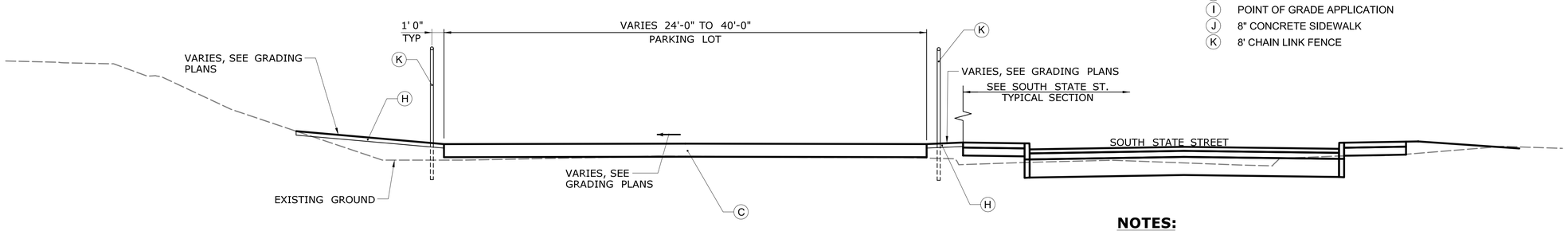

RAILROAD PARKING LOT 3 / CIV-002

LEGEND

- (A) 4" HMA S0.5 (2 LIFTS)
- (B) 4" HMA S1.0
- (C) 12" PROCESSED AGGREGATE BASE
- (D) BITUMINOUS CONCRETE LIP CURBING (WHERE SHOWN ON SITE PLANS)
- (E) GRANITE STONE CURBING (WHERE SHOWN ON SITE PLANS)
- (F) 5" CONCRETE SIDEWALK
- (G) 8" GRAVEL BASE
- (H) TURF ESTABLISHMENT WITH 4" TOPSOIL (OR AS NOTED ON SITE PLAN)
- (I) POINT OF GRADE APPLICATION
- (J) 8" CONCRETE SIDEWALK
- (K) 8' CHAIN LINK FENCE

NOTES:

1. MATERIAL FOR TACK COAT SHALL BE APPLIED ON ALL MILLED SURFACES AND BETWEEN ALL COURSES/ LIFTS OF HMA PAVEMENT IN ACCORDANCE WITH THE TECHNICAL PROVISIONS.
2. TOTAL PAVEMENT STRUCTURE SHALL PROVIDE A 20 YEAR DESIGN LIFE AND BE IN ACCORDANCE WITH THE TECHNICAL PROVISIONS.
3. ALL GRANITE STONE CURBING SHALL HAVE 6" REVEAL UNLESS NOTED OTHERWISE.

DRAFT - NOT FOR BID OR CONSTRUCTION

BASE TECHNICAL CONCEPT PLANS

THIS IS A PROGRESS DRAWING AND IS NOT INTENDED TO BE RELIED UPON BY ANY PARTY AS INDICATING A FINAL DESIGN OR TO BE INTENDED FOR BIDDING OR CONSTRUCTION PURPOSES. THIS PROGRESS DRAWING IS PROVIDED SOLELY FOR INFORMATION WITHOUT REPRESENTATION OR WARRANTY OF ANY KIND. THIS PROGRESS DRAWING HAS NOT BEEN SUBJECT TO A FORMAL QUALITY CONTROL CHECKING PROCESS.

REV.	DATE	REVISION DESCRIPTION	SHEET NO.
-	-	-	-
-	-	-	-
-	-	-	-
-	-	-	-
-	-	-	-
-	-	-	-

THE INFORMATION, INCLUDING ESTIMATED QUANTITIES OF WORK, SHOWN ON THESE SHEETS IS BASED ON LIMITED INVESTIGATIONS BY THE STATE AND IS IN NO WAY WARRANTED TO INDICATE THE CONDITIONS OF ACTUAL QUANTITIES OF WORK WHICH WILL BE REQUIRED.

Plotted Date: 4/10/2020

DESIGNER/DRAFTER: **PRP**
CHECKED BY: **JP**
SCALE IN FEET 0 5 10
SCALE 1"=5'

STATE OF CONNECTICUT
DEPARTMENT OF TRANSPORTATION

Filename: ...\FD_MSH_TYP_0301_0047.dgn

SIGNATURE/ BLOCK:
CHA
200 Corporate Place, Suite 110
Rocky Hill, CT 06067
860.257.4557 - www.chacompanies.com

PROJECT TITLE: **STAMFORD PARKING GARAGE**

TOWN: **STAMFORD**

DRAWING TITLE: **TYPICAL SECTIONS**

PROJECT NO. **301-0047**
DRAWING NO. **TYP-002**
SHEET NO.

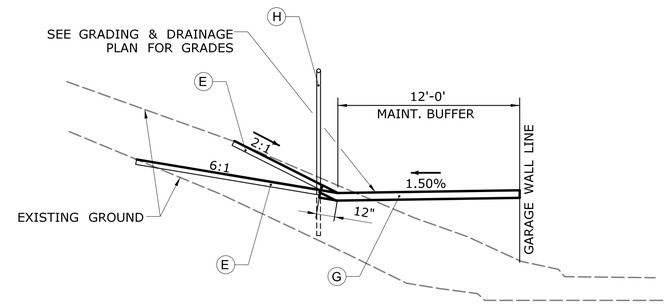

MAINTENANCE BUFFER 2 / CIV-002

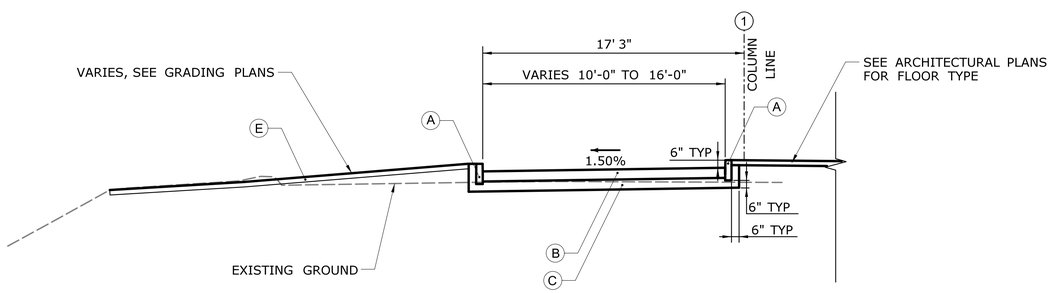

MULTI-USE PATH SPUR 1 / CIV-002

LEGEND

- (A) GRANITE STONE CURBING (WHERE SHOWN ON SITE PLAN)
- (B) 8" CONCRETE SIDEWALK
- (C) 8" GRAVEL BASE
- (D) POINT OF GRADE APPLICATION
- (E) TURF ESTABLISHMENT WITH 4" TOPSOIL (OR AS NOTED ON SITE PLAN)
- (F) 6" PROCESSED AGGREGATE BASE
- (G) 6" GRAVEL SURFACE
- (H) 8' CHAIN LINK FENCE

DRAFT - NOT FOR BID OR CONSTRUCTION

BASE TECHNICAL CONCEPT PLANS

THIS IS A PROGRESS DRAWING AND IS NOT INTENDED TO BE RELIED UPON BY ANY PARTY AS INDICATING A FINAL DESIGN OR TO BE INTENDED FOR BIDDING OR CONSTRUCTION PURPOSES. THIS PROGRESS DRAWING IS PROVIDED SOLELY FOR INFORMATION WITHOUT REPRESENTATION OR WARRANTY OF ANY KIND. THIS PROGRESS DRAWING HAS NOT BEEN SUBJECT TO A FORMAL QUALITY CONTROL CHECKING PROCESS.

REV.	DATE	REVISION DESCRIPTION	SHEET NO.
-	-	-	-
-	-	-	-
-	-	-	-
-	-	-	-
-	-	-	-
-	-	-	-

THE INFORMATION, INCLUDING ESTIMATED QUANTITIES OF WORK, SHOWN ON THESE SHEETS IS BASED ON LIMITED INVESTIGATIONS BY THE STATE AND IS IN NO WAY WARRANTED TO INDICATE THE CONDITIONS OF ACTUAL QUANTITIES OF WORK WHICH WILL BE REQUIRED.

Plotted Date: 4/10/2020

DESIGNER/DRAFTER: **PRP**

CHECKED BY: **JP**

SCALE IN FEET 0 5 10

SCALE 1"=5'

STATE OF CONNECTICUT
DEPARTMENT OF TRANSPORTATION

Filename: ...\FD_MSH_TYP_0301_0047.dgn

SIGNATURE/ BLOCK:

CHA
200 Corporate Place, Suite 110
Rocky Hill, CT 06067
860.257.4557 - www.chacompanies.com

PROJECT TITLE: **STAMFORD PARKING GARAGE**

TOWN: **STAMFORD**

DRAWING TITLE: **TYPICAL SECTIONS**

PROJECT NO. **301-0047**

DRAWING NO. **TYP-003**

SHEET NO.

BASELINE CURVE DATA

CURVE #1 Delta = 11° 06'45.91" D = 19° 21'24.06" T = 28.80 L = 57.41 R = 296.00 PI N 578532.12 PI E 780735.75	CURVE #2 Delta = 11° 45'08.18" D = 19° 21'24.06" T = 30.46 L = 60.71 R = 296.00 PI N 578564.82 PI E 780785.17	CURVE #3 Delta = 10° 27'32.76" D = 19° 05'54.94" T = 27.46 L = 54.76 R = 300.00 PI N 578674.84 PI E 781061.02	CURVE #4 Delta = 5° 52'58.17" D = 11° 27'32.96" T = 25.69 L = 51.34 R = 500.00 PI N 578809.54 PI E 781274.90	CURVE #5 Delta = 67° 35'52.31" D = 301° 33'24.24" T = 12.72 L = 22.42 R = 19.00 PI N 578527.45 PI E 780818.65	
CURVE #6 Delta = 89° 53'43.10" D = 229° 10'59.22" T = 24.95 L = 39.22 R = 25.00 PI N 578610.83 PI E 780827.93	CURVE #7 Delta = 35° 00'00.00" D = 92° 24'45.17" T = 19.55 L = 37.87 R = 62.00 PI N 578694.53 PI E 781038.91	CURVE #8 Delta = 35° 00'00.00" D = 114° 35'29.61" T = 15.76 L = 30.54 R = 50.00 PI N 578759.69 PI E 781081.81	CURVE #9 Delta = 10° 47'18.36" D = 51° 09'25.01" T = 10.58 L = 21.09 R = 112.00 PI N 578791.65 PI E 781162.38	CURVE #10 Delta = 56° 34'55.44" D = 154° 51'12.45" T = 19.91 L = 36.54 R = 37.00 PI N 578837.89 PI E 781235.16	CURVE #11 Delta = 2° 31'42.79" D = 8° 11'06.40" T = 15.45 L = 30.89 R = 700.00 PI N 578891.92 PI E 781267.40

NOTES:

1. SEE DWG. NOS. CIV-002 & CIV-003 FOR ENLARGED SITE PLANS AND ADDITIONAL NOTES.
2. SEE ARCHITECTURAL DWGS. FOR PARKING GARAGE AND PEDESTRIAN BRIDGE PLANS AND DETAILS.
3. SEE STRUCTURAL DWGS. FOR SITE RETAINING WALL PLANS AND DETAILS.

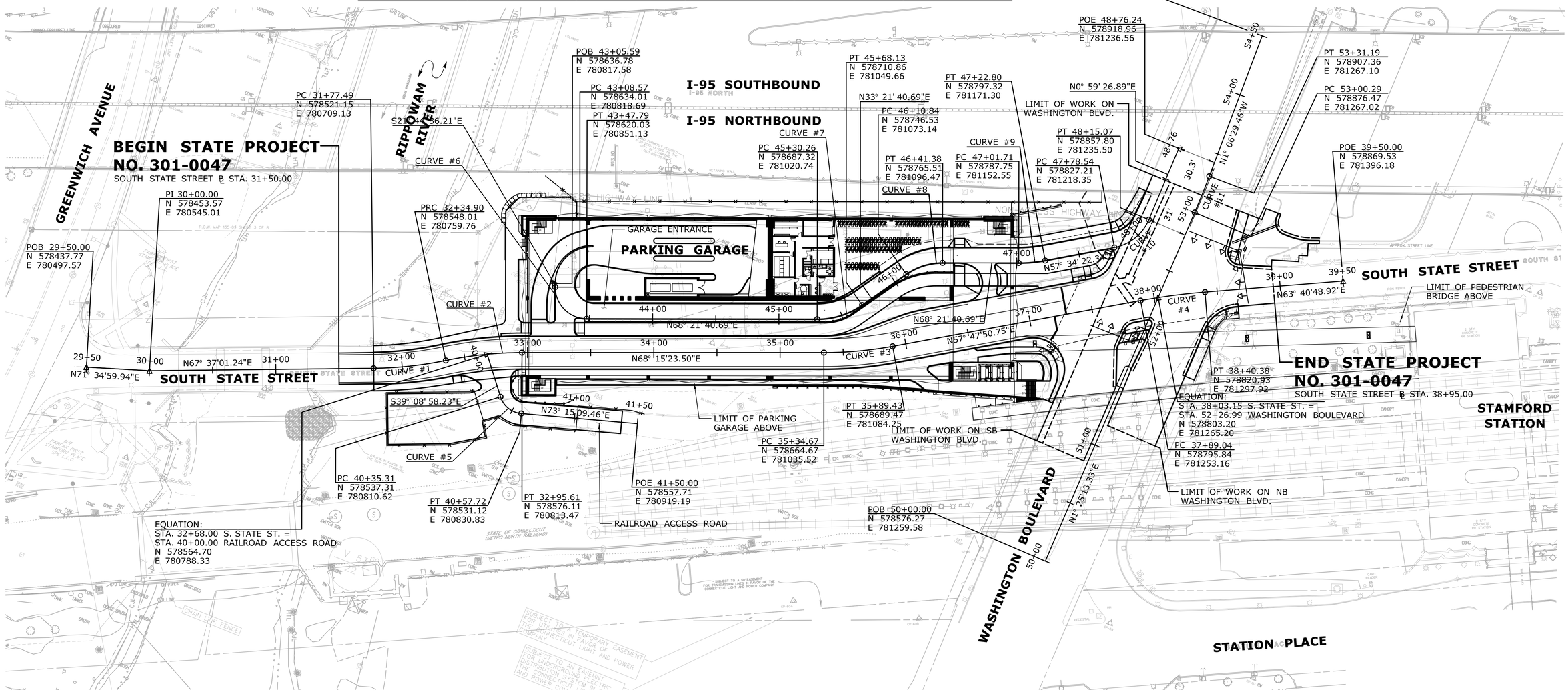

BASE TECHNICAL CONCEPT PLANS

THIS IS A PROGRESS DRAWING AND IS NOT INTENDED TO BE RELIED UPON BY ANY PARTY AS INDICATING A FINAL DESIGN OR TO BE INTENDED FOR BIDDING OR CONSTRUCTION PURPOSES. THIS PROGRESS DRAWING IS PROVIDED SOLELY FOR INFORMATION WITHOUT REPRESENTATION OR WARRANTY OF ANY KIND. THIS PROGRESS DRAWING HAS NOT BEEN SUBJECT TO A FORMAL QUALITY CONTROL CHECKING PROCESS.

REV.	DATE	REVISION DESCRIPTION	SHEET NO.
-	-	-	-
-	-	-	-
-	-	-	-
-	-	-	-
-	-	-	-
-	-	-	-

THE INFORMATION, INCLUDING ESTIMATED QUANTITIES OF WORK, SHOWN ON THESE SHEETS IS BASED ON LIMITED INVESTIGATIONS BY THE STATE AND IS IN NO WAY WARRANTED TO INDICATE THE CONDITIONS OF ACTUAL QUANTITIES OF WORK WHICH WILL BE REQUIRED.

Plotted Date: 4/10/2020

DESIGNER/DRAFTER: PRP
CHECKED BY: JP
SCALE IN FEET 0 40 80
SCALE 1"=40'

STATE OF CONNECTICUT
DEPARTMENT OF TRANSPORTATION

Filename: ...\FD_MSH_CIV_0301_0047.dgn

SIGNATURE/BLOCK:
CHA
200 Corporate Place, Suite 110
Rocky Hill, CT 06067
860.257.4557 - www.chacompanies.com

PROJECT TITLE: STAMFORD PARKING GARAGE

TOWN: STAMFORD

DRAWING TITLE: BASELINE LAYOUT PLAN

PROJECT NO. 301-0047
DRAWING NO. BSL-001
SHEET NO.

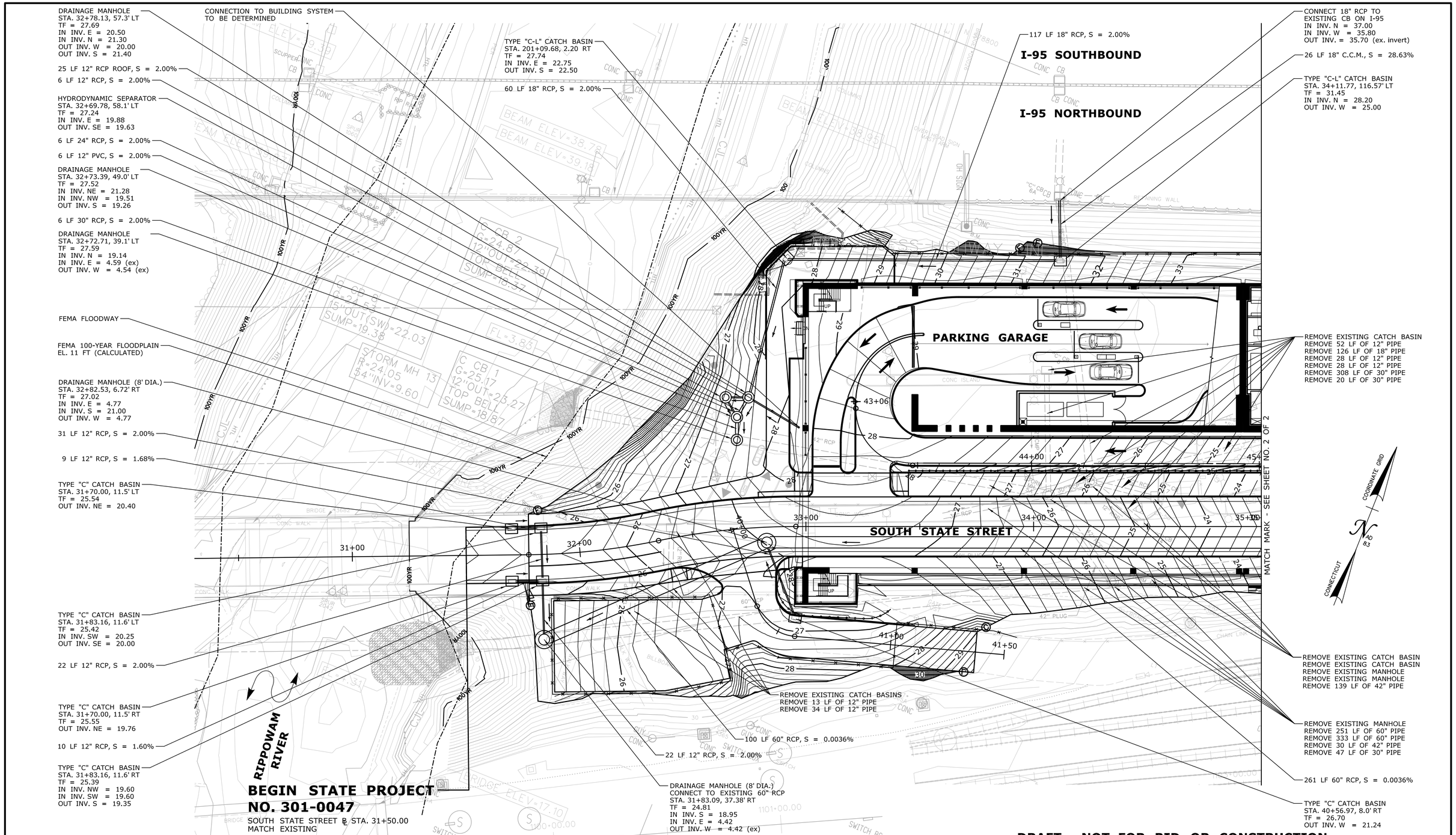

DRAFT - NOT FOR BID OR CONSTRUCTION

BASE TECHNICAL CONCEPT PLANS

THIS IS A PROGRESS DRAWING AND IS NOT INTENDED TO BE RELIED UPON BY ANY PARTY AS INDICATING A FINAL DESIGN OR TO BE INTENDED FOR BIDDING OR CONSTRUCTION PURPOSES. THIS PROGRESS DRAWING IS PROVIDED SOLELY FOR INFORMATION WITHOUT REPRESENTATION OR WARRANTY OF ANY KIND. THIS PROGRESS DRAWING HAS NOT BEEN SUBJECT TO A FORMAL QUALITY CONTROL CHECKING PROCESS.

REV.	DATE	REVISION DESCRIPTION	SHEET NO.
-	-	-	-
-	-	-	-
-	-	-	-
-	-	-	-
-	-	-	-
-	-	-	-

THE INFORMATION, INCLUDING ESTIMATED QUANTITIES OF WORK, SHOWN ON THESE SHEETS IS BASED ON LIMITED INVESTIGATIONS BY THE STATE AND IS IN NO WAY WARRANTED TO INDICATE THE CONDITIONS OF ACTUAL QUANTITIES OF WORK WHICH WILL BE REQUIRED.

Plotted Date: 4/10/2020

DESIGNER/DRAFTER: **PRP**

CHECKED BY: **JP**

SCALE IN FEET 0 20 40

SCALE 1"=20'

STATE OF CONNECTICUT
DEPARTMENT OF TRANSPORTATION

Filename: ...\FD_MSH_DRG_0301_0047.dgn

SIGNATURE/BLOCK:

CHA
200 Corporate Place, Suite 110
Rocky Hill, CT 06067
860.257.4557 - www.chacompanies.com

PROJECT TITLE: **STAMFORD PARKING GARAGE**

TOWN: **STAMFORD**

DRAWING TITLE: **GRADING & DRAINAGE PLAN**

PROJECT NO. **301-0047**

DRAWING NO. **GRD-001**

SHEET NO.

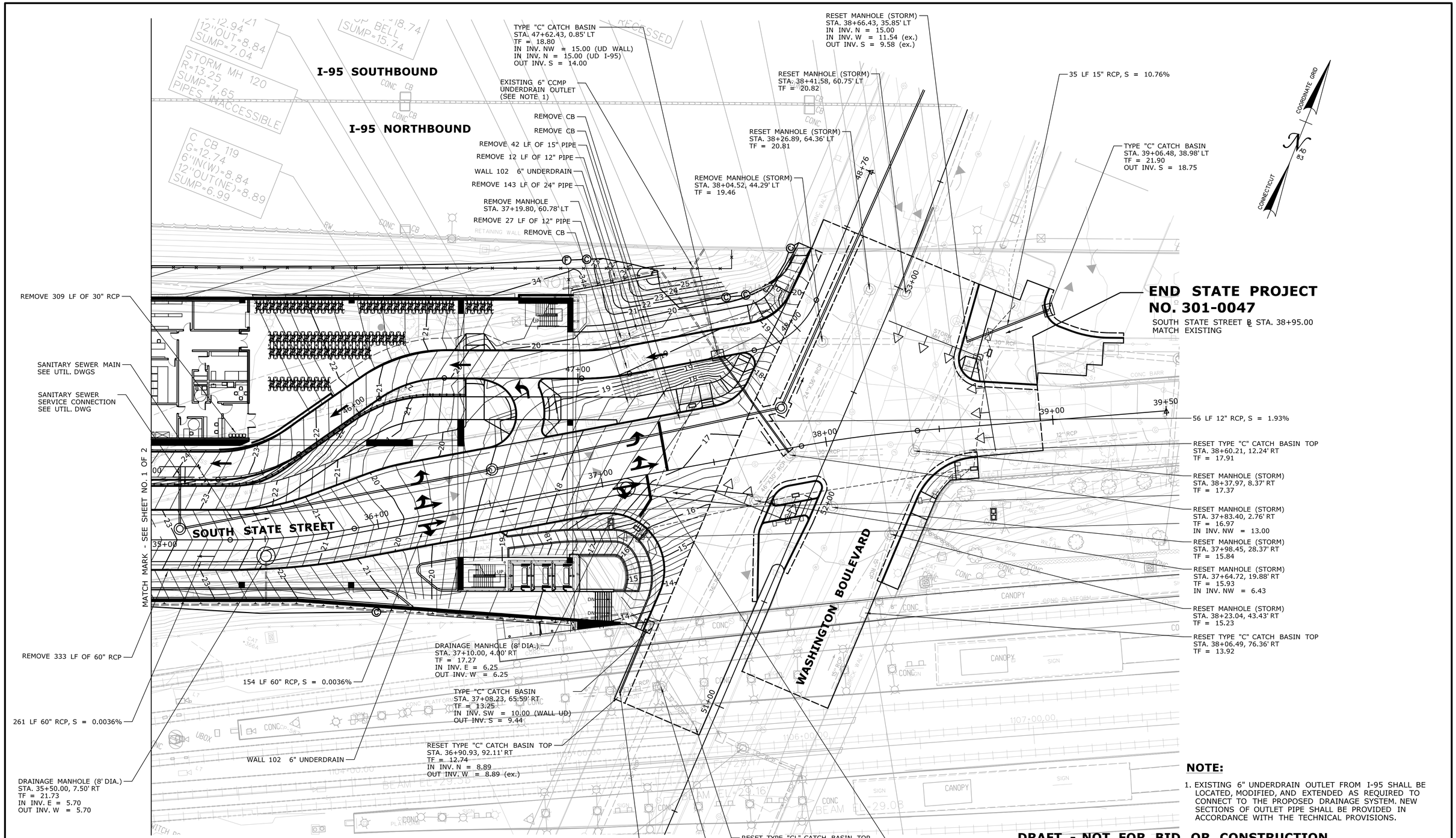

NOTE:

1. EXISTING 6" UNDERDRAIN OUTLET FROM I-95 SHALL BE LOCATED, MODIFIED, AND EXTENDED AS REQUIRED TO CONNECT TO THE PROPOSED DRAINAGE SYSTEM. NEW SECTIONS OF OUTLET PIPE SHALL BE PROVIDED IN ACCORDANCE WITH THE TECHNICAL PROVISIONS.

DRAFT - NOT FOR BID OR CONSTRUCTION

BASE TECHNICAL CONCEPT PLANS

THIS IS A PROGRESS DRAWING AND IS NOT INTENDED TO BE RELIED UPON BY ANY PARTY AS INDICATING A FINAL DESIGN OR TO BE INTENDED FOR BIDDING OR CONSTRUCTION PURPOSES. THIS PROGRESS DRAWING IS PROVIDED SOLELY FOR INFORMATION WITHOUT REPRESENTATION OR WARRANTY OF ANY KIND. THIS PROGRESS DRAWING HAS NOT BEEN SUBJECT TO A FORMAL QUALITY CONTROL CHECKING PROCESS.

REV.	DATE	REVISION DESCRIPTION	SHEET NO.
-	-	-	-
-	-	-	-
-	-	-	-
-	-	-	-
-	-	-	-
-	-	-	-

THE INFORMATION, INCLUDING ESTIMATED QUANTITIES OF WORK, SHOWN ON THESE SHEETS IS BASED ON LIMITED INVESTIGATIONS BY THE STATE AND IS IN NO WAY WARRANTED TO INDICATE THE CONDITIONS OF ACTUAL QUANTITIES OF WORK WHICH WILL BE REQUIRED.

Plotted Date: 4/10/2020

DESIGNER/DRAFTER: **PRP**
CHECKED BY: **JP**
SCALE IN FEET 0 20 40
SCALE 1"=20'

STATE OF CONNECTICUT
DEPARTMENT OF TRANSPORTATION

Filename: ...\FD_MSH_DRG_0301_0047.dgn

SIGNATURE/BLOCK:
CHA
200 Corporate Place, Suite 110
Rocky Hill, CT 06067
860.257.4557 - www.chacompanies.com

PROJECT TITLE: **STAMFORD PARKING GARAGE**

TOWN: **STAMFORD**

DRAWING TITLE: **GRADING & DRAINAGE PLAN**

PROJECT NO. **301-0047**
DRAWING NO. **GRD-002**
SHEET NO.

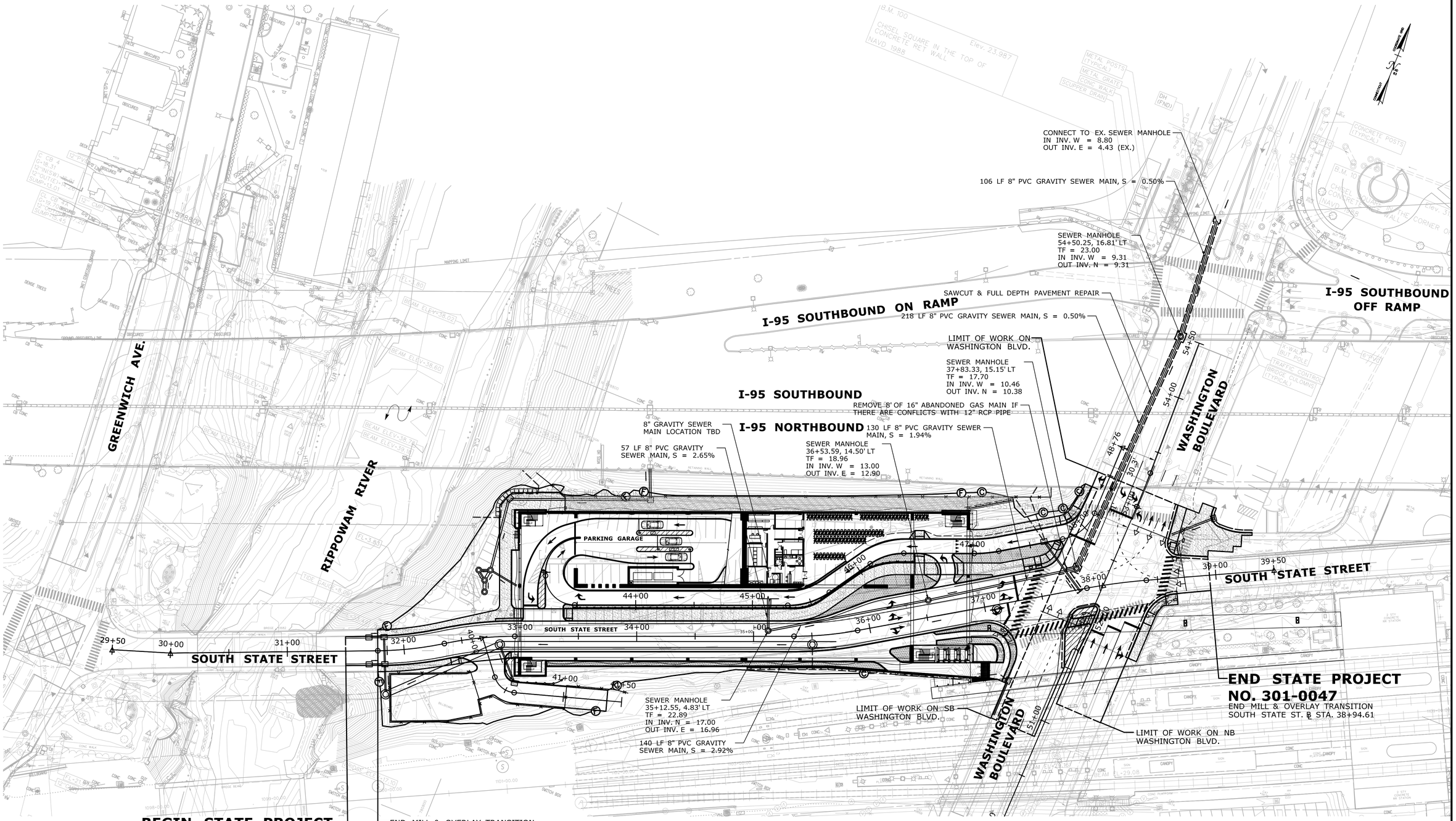

DRAFT - NOT FOR BID OR CONSTRUCTION

BASE TECHNICAL CONCEPT PLANS

THIS IS A PROGRESS DRAWING AND IS NOT INTENDED TO BE RELIED UPON BY ANY PARTY AS INDICATING A FINAL DESIGN OR TO BE INTENDED FOR BIDDING OR CONSTRUCTION PURPOSES. THIS PROGRESS DRAWING IS PROVIDED SOLELY FOR INFORMATION WITHOUT REPRESENTATION OR WARRANTY OF ANY KIND. THIS PROGRESS DRAWING HAS NOT BEEN SUBJECT TO A FORMAL QUALITY CONTROL CHECKING PROCESS.

REV.	DATE	REVISION DESCRIPTION	SHEET NO.
-	-	-	-
-	-	-	-
-	-	-	-
-	-	-	-
-	-	-	-
-	-	-	-

THE INFORMATION, INCLUDING ESTIMATED QUANTITIES OF WORK, SHOWN ON THESE SHEETS IS BASED ON LIMITED INVESTIGATIONS BY THE STATE AND IS IN NO WAY WARRANTED TO INDICATE THE CONDITIONS OF ACTUAL QUANTITIES OF WORK WHICH WILL BE REQUIRED.

Plotted Date: 4/10/2020

DESIGNER/DRAFTER: **PRP**

CHECKED BY: **JP**

SCALE IN FEET 0 40 80

SCALE 1"=40'

STATE OF CONNECTICUT
DEPARTMENT OF TRANSPORTATION

Filename: ...\FD_MSH_UTL_0301_0047.dgn

SIGNATURE/BLOCK:

CHA
200 Corporate Place, Suite 110
Rocky Hill, CT 06067
860.257.4557 • www.chacompanies.com

PROJECT TITLE: **STAMFORD PARKING GARAGE**

TOWN: **STAMFORD**

DRAWING TITLE: **UTILITY PLAN**

PROJECT NO. **301-0047**

DRAWING NO. **UTL-001**

SHEET NO.

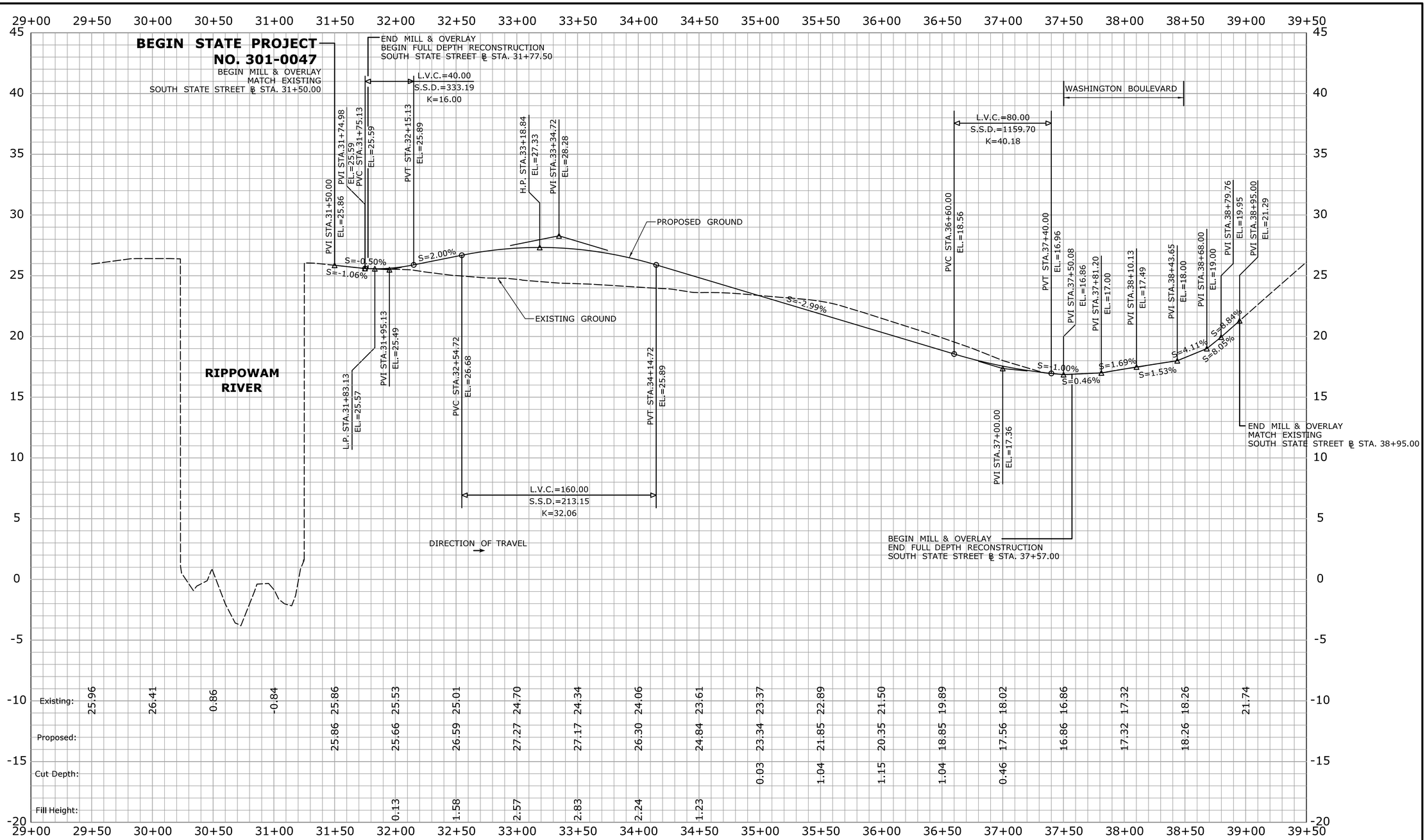

SOUTH STATE STREET

LINE	SURFACE	OFFSET
— — ·	EXISTING	0.00

Scaled 10.0000 Times Ver.
Scaled 1.0000 Times Hor.

DRAFT - NOT FOR BID OR CONSTRUCTION

BASE TECHNICAL CONCEPT PLANS

THIS IS A PROGRESS DRAWING AND IS NOT INTENDED TO BE RELIED UPON BY ANY PARTY AS INDICATING A FINAL DESIGN OR TO BE INTENDED FOR BIDDING OR CONSTRUCTION PURPOSES. THIS PROGRESS DRAWING IS PROVIDED SOLELY FOR INFORMATION WITHOUT REPRESENTATION OR WARRANTY OF ANY KIND. THIS PROGRESS DRAWING HAS NOT BEEN SUBJECT TO A FORMAL QUALITY CONTROL CHECKING PROCESS.

REV.	DATE	REVISION DESCRIPTION	SHEET NO.
-	-	-	-
-	-	-	-
-	-	-	-
-	-	-	-
-	-	-	-
-	-	-	-

THE INFORMATION, INCLUDING ESTIMATED QUANTITIES OF WORK, SHOWN ON THESE SHEETS IS BASED ON LIMITED INVESTIGATIONS BY THE STATE AND IS IN NO WAY WARRANTED TO INDICATE THE CONDITIONS OF ACTUAL QUANTITIES OF WORK WHICH WILL BE REQUIRED.

Plotted Date: 4/10/2020

DESIGNER/DRAFTER: **PRP**
CHECKED BY: **JP**
SCALE IN FEET 0 20 40
SCALE 1"=20'

STATE OF CONNECTICUT
DEPARTMENT OF TRANSPORTATION

Filename: ...\FD_MSH_PRO_0301_0047.dgn

SIGNATURE/BLOCK:
CHA
200 Corporate Place, Suite 110
Rocky Hill, CT 06067
860.257.4557 - www.chacompanies.com

PROJECT TITLE: **STAMFORD PARKING GARAGE**

TOWN: **STAMFORD**

DRAWING TITLE: **SOUTH STATE STREET PROFILE**

PROJECT NO. **301-0047**
DRAWING NO. **PRO-001**
SHEET NO.

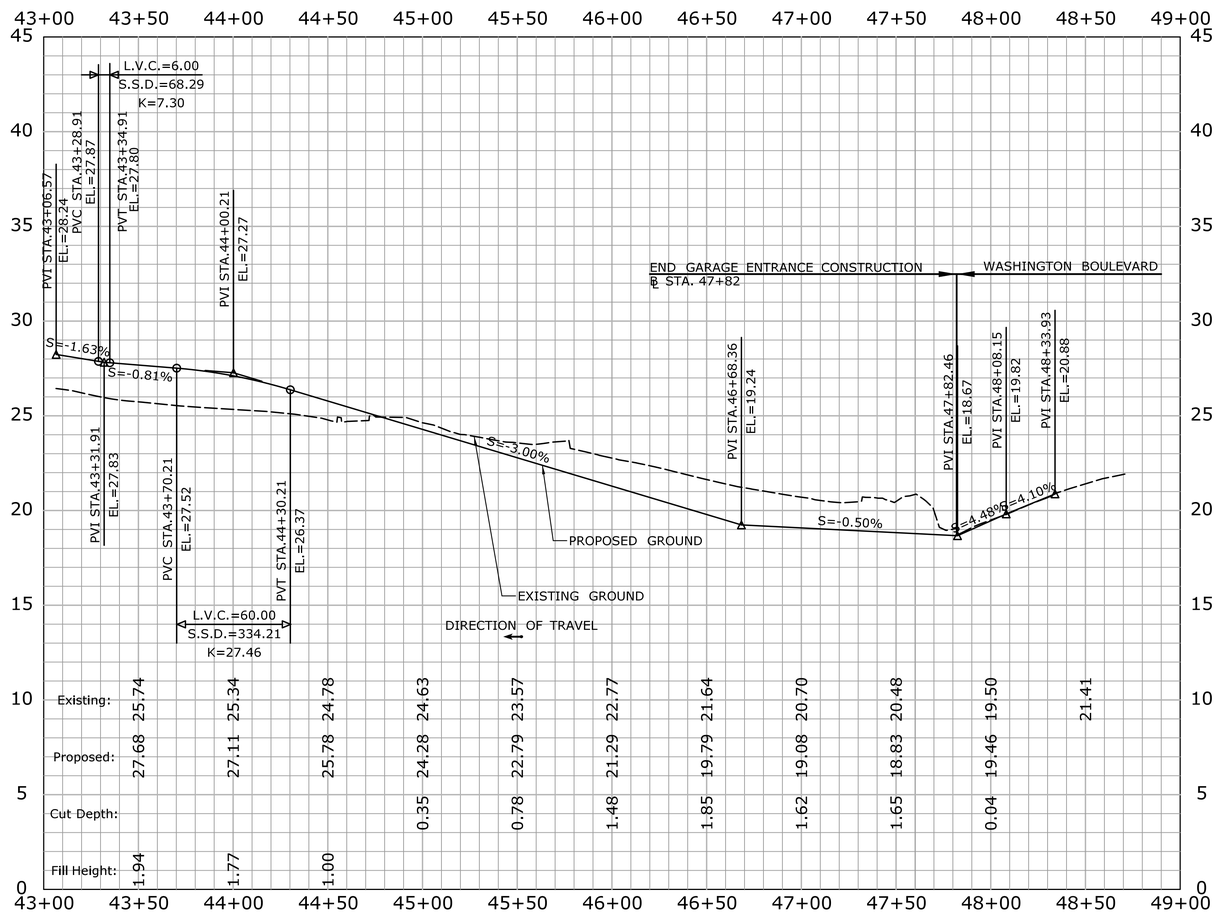

GARAGE ENTRANCE

LINE	SURFACE	OFFSET
—— ·	EXISTING	0.00

Scaled 10.0000 Times Ver.
Scaled 1.0000 Times Hor.

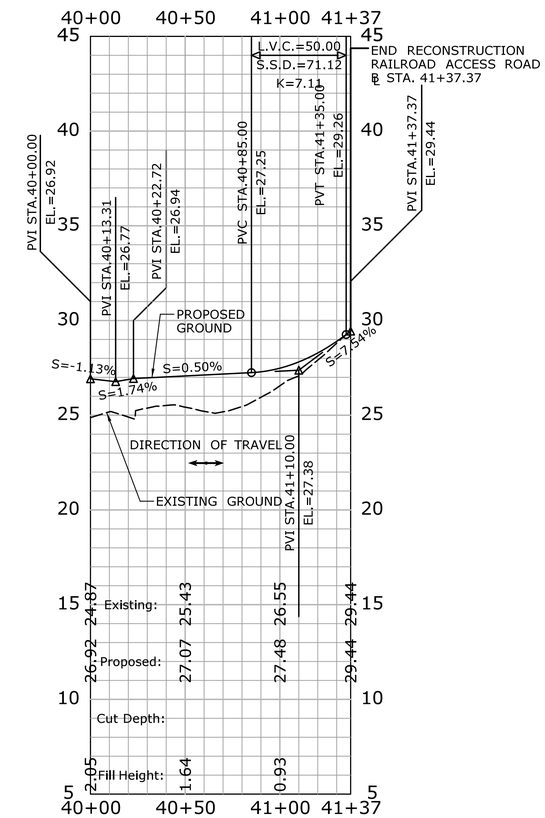

RAILROAD ACCESS ROAD

LINE	SURFACE	OFFSET
——	EXISTING	0.00

Scaled 10.0000 Times Ver.
Scaled 1.0000 Times Hor.

DRAFT - NOT FOR BID OR CONSTRUCTION

BASE TECHNICAL CONCEPT PLANS

THIS IS A PROGRESS DRAWING AND IS NOT INTENDED TO BE RELIED UPON BY ANY PARTY AS INDICATING A FINAL DESIGN OR TO BE INTENDED FOR BIDDING OR CONSTRUCTION PURPOSES. THIS PROGRESS DRAWING IS PROVIDED SOLELY FOR INFORMATION WITHOUT REPRESENTATION OR WARRANTY OF ANY KIND. THIS PROGRESS DRAWING HAS NOT BEEN SUBJECT TO A FORMAL QUALITY CONTROL CHECKING PROCESS.

REV.	DATE	REVISION DESCRIPTION	SHEET NO.
-	-	-	-
-	-	-	-
-	-	-	-
-	-	-	-
-	-	-	-
-	-	-	-

THE INFORMATION, INCLUDING ESTIMATED QUANTITIES OF WORK, SHOWN ON THESE SHEETS IS BASED ON LIMITED INVESTIGATIONS BY THE STATE AND IS IN NO WAY WARRANTED TO INDICATE THE CONDITIONS OF ACTUAL QUANTITIES OF WORK WHICH WILL BE REQUIRED.

Plotted Date: 4/10/2020

DESIGNER/DRAFTER: **PRP**
CHECKED BY: **JP**
SCALE IN FEET 0 20 40
SCALE 1"=20'

STATE OF CONNECTICUT
DEPARTMENT OF TRANSPORTATION

Filename: ...\FD_MSH_PRO_0301_0047.dgn

SIGNATURE/BLOCK:
CHA
200 Corporate Place, Suite 110
Rocky Hill, CT 06067
860.257.4557 - www.chacompanies.com

PROJECT TITLE: **STAMFORD PARKING GARAGE**

TOWN: **STAMFORD**

DRAWING TITLE: **INNER GARAGE & R. R. ACCESS PROFILES**

PROJECT NO. **301-0047**
DRAWING NO. **PRO-002**
SHEET NO.