05 - ARCHITECTURAL
COVER SHEET

DRAWING NUMBER	DRAWING TITLE	DRAWING NUMBER	DRAWING TITLE
A-002	ARCHITECTURAL INDEX OF DRAWINGS	A-402	GARAGE STAIR SECTIONS (NW AND SW CORNER)
A-003	ABBREVIATIONS	A-403	GARAGE STAIR 1 DETAIL PLANS (NE CORNER)
A-010	SITE PLAN	A-404	GARAGE STAIR 2 DETAIL PLANS (SE CORNER)
A-011	CODE AND LIFE SAFETY	A-405	GARAGE STAIR 3 DETAIL PLANS (NW CORNER)
A-101	GROUND FLOOR PLAN	A-406	GARAGE STAIR 4 DETAIL PLANS (SW CORNER)
A-101A	ENLARGED BOH FLOOR PLAN	A-501	PERFORATED SCREEN FAÇADE PANEL DETAILS
A-102	SECOND FLOOR PLAN	A-502	PERFORATED SCREEN FAÇADE PANEL DETAILS
A-103	THIRD, FIFTH, SIXTH, SEVENTH FLOOR PLAN		
A-104	FOURTH FLOOR PLAN		
A-105	EIGHTH FLOOR PLAN		
A-106	PEDESTRIAN BRIDGE PLAN		
A-107	EXISTING STATION RENOVATION PLAN		
A-201	SOUTH ELEVATION AND LONGITUDINAL SECTION		
A-202	NORTH ELEVATION AND LONGITUDINAL SECTION		
A-203	EAST ELEVATION AND CROSS SECTION		
A-204	WEST ELEVATION AND CROSS SECTION		
A-301	WALL SECTIONS		
A-302	WALL SECTIONS		
A-303	BRIDGE SECTIONS		
A-401	GARAGE STAIR SECTIONS (NE AND SE CORNER)		

DRAFT - NOT FOR BID OR CONSTRUCTION

BASE TECHNICAL CONCEPT PLANS

THIS IS A PROGRESS DRAWING AND IS NOT INTENDED TO BE RELIED UPON BY ANY PARTY AS INDICATING A FINAL DESIGN OR TO BE INTENDED FOR BIDDING OR CONSTRUCTION PURPOSES. THIS PROGRESS DRAWING IS PROVIDED SOLELY FOR INFORMATION WITHOUT REPRESENTATION OR WARRANTY OF ANY KIND. THIS PROGRESS DRAWING HAS NOT BEEN SUBJECT TO A FORMAL QUALITY CONTROL CHECKING PROCESS.

REV.	DATE	REVISION DESCRIPTION	SHEET NO.
-	-	-	-
-	-	-	-
-	-	-	-
-	-	-	-
-	-	-	-
-	-	-	-

THE INFORMATION, INCLUDING ESTIMATED QUANTITIES OF WORK, SHOWN ON THESE SHEETS IS BASED ON LIMITED INVESTIGATIONS BY THE STATE AND IS IN NO WAY WARRANTED TO INDICATE THE CONDITIONS OF ACTUAL QUANTITIES OF WORK WHICH WILL BE REQUIRED.

Plotted Date: 4/13/2020

DESIGNER/DRAFTER: **PRP**

CHECKED BY: **JP**

SCALE AS NOTED

STATE OF CONNECTICUT
DEPARTMENT OF TRANSPORTATION

Filename: ...\FD_MSH_ARC_0301_0047_A-001.dgn

SIGNATURE/ BLOCK:

CHA
200 Corporate Place, Suite 110
Rocky Hill, CT 06067
860.257.4557 - www.chacompanies.com

PROJECT TITLE: **STAMFORD PARKING GARAGE**

TOWN: **STAMFORD**

DRAWING TITLE: **ARCHITECTURAL INDEX OF DRAWINGS**

PROJECT NO. **301-0047**

DRAWING NO. **A-002**

SHEET NO.

AAD	AUTOMATIC AIR DAMPER
AB	ANCHOR BOLT
ABAN	ABANDON
A/C	AIR CONDITION
A/C UNIT	AIR CONDITIONING UNIT
AC	ALTERNATING CURRENT, ARMORED CABLE
ACCU	AIR COOLED CONDENSING UNIT
ACS DR	ACCESS DOOR
ACS PNL	ACCESS PANEL
ACSR	ALUMINUM CABLE STEEL REINF
ACST	ACOUSTIC
ACT	ACOUSTICAL CEILING TILE
AD	AREA DRAIN
ADA	AMERICANS WITH DISABILITIES ACT
ADDL	ADDITIONAL
ADDM	ADDENDUM
ADJ	ADJUSTABLE
AFF	ABOVE FINISHED FLOOR
AFG	ABOVE FINISHED GRADE
AGGR	AGGREGATE
AH	AMPERE HOUR
AHJ	AUTHORITY HAVING JURISDICTION
AHU	AIR HANDLING UNIT
ALM	ALARM
ALT	ALTERNATE
ALUM	ALUMINUM
AMB	AMBIENT
AMP	AMPERE
ANN	ANNUNCIATOR
APPD	APPROVED
APPROX	APPROXIMATE
AR	AS REQUIRED
ARCH	ARCHITECT
ASCE	AMERICAN SOCIETY OF CIVIL ENGINEERS
ASPH	ASPHALT
ASSY	ASSEMBLY
ASTM	AMERICAN SOCIETY FOR TESTING MATERIALS
ASYM	ASYMMETRICAL
ATS	AUTOMATIC TRANSFER SWITCH
AUTO	AUTOMATIC
AUX	AUXILIARY
AVE	AVENUE
AVG	AVERAGE
AWG	AMERICAN WIRE GAGE
AWT	ACOUSTICAL WALL TREATMENT
AWWA	AMERICAN WATER WORKS ASSOCIATION
AZ	AZIMUTH
BAT	BATTERY
BC	BOLT CIRCLE, BOOKCASE
BD	BOARD
BDD	BACKDRAFT DAMPER
BDRY	BOUNDARY
BF	BOTH FACES
BFP	BACKFLOW PREVENTER
BFWP	BOILER FEED WATER PUMP
BHP	BRAKE HORSEPOWER
BITUM	BITUMINOUS
BLWDN	BLOWDOWN
BL	BASE LINE
BLDG	BUILDING
BLKT	BLANKET
BLR	BOILER
BLR HP	BOILER HORSEPOWER
BLT	BORROWED LIGHT
BLVD	BOULEVARD
BLW	BELOW
BM	BEAM, BENCHMARK
BO	BOTTOM OF _____
BOS	BOTTOM OF STEEL
BOT	BOTTOM
B PL	BASE PLATE
BR	BEDROOM
BRCG	BRACING
BRDG	BRIDGING
BRG	BEARING
BRKT	BRACKET
BRZ	BRONZE
BS	BOTH SIDES
BSMT	BASEMENT
Btu	BRITISH THERMAL UNIT
BtuH	BRITISH THERMAL UNIT PER HOUR
BTWN	BETWEEN
BUR	BUILT-UP ROOF
C	CELSIUS, CHANNEL
C TO C	CENTER TO CENTER
CAB	CABINET
CALC	CALCULATE
CAP	CAPACITY
CAT	CATALOGUE
CB	CATCH BASIN, CERAMIC BASE
C/C	COOLING COIL
CC	CUBIC CENTIMETER
CCTV	CLOSED CIRCUIT TELEVISION
CCW	COUNTERCLOCKWISE
CEM	CEMENT
CER	CERAMIC
CF/CI	CONTRACTOR FURNISHED / CONTR INSTALLED
CFE	CONTRACTOR FURNISHED EQUIP
CFM	CUBIC FOOT (FEET) PER MINUTE
CF/OI	CONTRACTOR FURNISHED / OWNER INSTALLED
CFS	CUBIC FOOT (FEET) PER SECOND
CG	CENTER OF GRAVITY, CORNER GUARD
CH	CHILLER
CHB	CHALKBOARD
CHEM	CHEMICAL
CHFR	CHAMFER
CHG	CHARGER
CHK	CHECK
CHWP	CHILLED WATER PUMP
CI	CAST IRON, CURB INLET
CIP	CAST IRON PIPE
CIR	CIRCLE

CJ	CONSTRUCTION JOINT, CONTROL JOINT
CKT	CIRCUIT
CKT BRKR	CIRCUIT BREAKER
CL	CENTER LINE, CLASS
CLG	CEILING
CLG HT	CEILING HEIGHT
CLO	CLOSET
CLR	CLEAR
CLRM	CLASSROOM
cm	CENTIMETER
CMP	CORRUGATED METAL PIPE
CMU	CONCRETE MASONRY UNIT
CND	CONDUIT
CNDS	CONDENSATE
CNTR	COUNTER
CO	CLEAN OUT, COMPANY
COEFF	COEFFICIENT
COL	COLUMN
COMB	COMBINATION
COMM	COMMUNICATION
COMPR	COMPRESSOR
CONC	CONCENTRIC, CONCRETE
CONC FL	CONCRETE FLOOR
COND	CONDENSER
CONF	CONFERENCE
CONN	CONNECT
CONSTR	CONSTRUCTION
CONT	CONTINUE, CONTINUOUS, CONTROLLER
CONTR	CONTRACT, CONTRACTOR
COORD	COORDINATE
COP	COEFFICIENT OF PERFORMANCE
CORR	CORRIDOR
CPT	CARPET, CONTROL POWER TRANSFORMER
CPVC	CHLORINATED POLYVINYL CHLORIDE
CR	CONTROL RELAY
CRP	CONDENSATE RETURN PUMP
CRS	COLD ROLLED STEEL
CSK	COUNTERSUNK
CT	CERAMIC TILE, CURRENT TRANSFORMER
CTB	CERAMIC TILE BASE
CTD	COATED
CTG	COATING
CTR	CENTER
CTRL	CONTROL
CU	COPPER
CU FT	CUBIC FOOT (FEET)
CUH	CABINET UNIT HEATER
CU IN	CUBIC INCH
CUR	CURRENT
CU YD	CUBIC YARD
CW	COLD WATER PIPING
CYL	CYLINDER
D	DEEP, DEPTH
DA	DRAINAGE AREA
dB	DECIBEL
DB	DRY BULB
DBL	DOUBLE
DC	DIRECT CURRENT
DDC	DIRECT DIGITAL CONTROL
DEG	DEGREE
DEL	DELETE
DEMO	DEMOLITION
DEPT	DEPARTMENT
DET	DETAIL
DEV	DEVELOPMENT
DF	DRINKING FOUNTAIN
DI	DROP INLET
DIA	DIAMETER
DIAG	DIAGRAM
DIFF	DIFFERENCE, DIFFUSER
DIM	DIMENSION
DIP	DUCTILE IRON PIPE
DIR	DIRECTION
DISC	DISCONNECT
DISCH	DISCHARGE
DISP	DISPENSER
DIST	DISTANCE
DISTR PNL	DISTRIBUTION PANEL
DIV	DIVISION
DL	DEAD LOAD
DMPR	DAMPER
DOM	DOMESTIC
DOZ	DOZEN
DPDT	DOUBLE POLE DOUBLE THROW
DPST	DOUBLE POLE SINGLE THROW
DR	DOOR, DRAIN, DRIVE
DS	DISCONNECT SWITCH, DOWNSPOUT
DTL	DETAIL
DW	DISHWASHER, DISTILLED WATER
DWG	DRAWING
E	EAST
EA	EACH
EAT	ENTERING AIR TEMPERATURE
ECC	ECCENTRIC
EER	ENERGY EFFICIENCY RATIO
EF	EACH FACE
EFF	EFFICIENCY
EIFS	EXTERIOR INSULATION FINISH SYSTEM
EH	ELECTRIC HEATER
EJ	EXPANSION JOINT
EL	ELEVATION
ELEC	ELECTRIC
ELEV	ELEVATOR
EMER	EMERGENCY
EMI	ELECTROMAGNETIC INTERFERENCE
EMT	ELECTRICAL METALLIC TUBING
ENCL	ENCLOSURE
ENGR	ENGINEER
ENTR	ENTRANCE
EOS	EDGE OF SLAB
EPA	ENVIRONMENTAL PROTECTION AGENCY
EPDM	ETHYLENE PROPYLENE DIENE MONOMER
EPRF	EXPLOSION PROOF

EQ	EQUAL
EQL SP	EQUALLY SPACED
EQUIP	EQUIPMENT
EQUIV	EQUIVALENT
ES	EDGE OF SHOULDER
ESC	ESCAPE
ESMT	EASEMENT
ESP	EXTERNAL STATIC PRESSURE
ETC	AND SO FORTH
EVAP	EVAPORATE
EW	EACH WAY
EWC	ELECTRIC WATER COOLER
EWH	ELECTRIC WATER HEATER
EWT	ENTERING WATER TEMPERATURE
EX	EXAMPLE
EXC	EXCAVATE
EXH	EXHAUST
EXHV	EXHAUST VENT
EXIST	EXISTING
EXP	EXPANSION
EXT	EXTERIOR, EXTERNAL, EXTINGUISHER
F	FARENHEIT, FEMALE
FA	FIRE ALARM, FRESH AIR
FAB	FABRICT
FACP	FIRE ALARM CONTROL PANEL
FAI	FRESH AIR INLET
FC	FILE CABINET, FOOT CANDLE
FCO	FLOOR CLEANOUT
FCTY	FACTORY
FCU	FAN COIL UNIT
FD	FLOOR DRAIN
FDMPR	FIRE DAMPER
FDR	FEEDER
FDTN	FOUNDATION
FDW	FEED WATER
FE	FIRE EXTINGUISHER
FEC	FIRE EXTINGUISHER W/CABINET
FED	FEDERAL
FF	FAR FACE, FINISH FACE
FF BATT	FOIL BACKED BATT INSULATION
FF&E	FURNITURE, FIXTURE & EQUIPMENT
F/F	FACE TO FACE
FH	FIRE HOSE
FHC	FIRE HOSE CABINET
FHR	FIRE HOSE RACK
FHWA	FEDERAL HIGHWAY ADMINISTRATION
FIG	FIGURE
FIL	FILLET
FIN	FINISH
FIN BS	FINISH BOTH SIDES
FIN FL	FINISHED FLOOR
FIN FLR	FINISHED FLOOR
FIXT	FIXTURE
FL	FLOOR
FLA	FULL LOAD AMPS
FLEX	FLEXIBLE
FLG	FLANGE
FLL	FLOW LINE
FLMT	FLUSH MOUNT
FL OZ	FLUID OUNCE
FL, FLR	FLOOR
FL SK	FLOW SINK
FL SW	FLOW SWITCH
FLUOR	FLUORESCENT
FN	FENCE
FO	FUEL OIL
FOTK	FUEL OIL STORAGE TANK
FP	FIREPROOF, FLAGPOLE
FPM	FOOT (FEET) PER MINUTE
FPS	FOOT (FEET) PER SECOND
FR	FRAME
FREQ	FREQUENCY
FRP	FIBER GLASS REINFORCED PLASTIC
FS	FAR SIDE, FEDERAL SPECIFICATION
FT	FOOT, FEET
FTG	FOOTING
FT HD	FEET OF HEAD
FURN	FURNISH, FURNITURE
FUT	FUTURE
FVNR	FULL VOLTAGE NON-REVERSING
FVR	FULL VOLTAGE REVERSING
FWC	FABRIC WALL COVERING
G	GROUND, NATURAL GAS
GA	GAGE
GAL	GALLON
GALV	GALVANIZED
GALV STL	GALVANIZED STEEL
GC	GENERAL CONTRACTOR
GD	GUARD
GEN	GENERAL, GENERATOR
GFCI	GROUND FAULT CIRCUIT INTERRUPTER
GFRG	GLASS FIBER REINFORCED GYPSUM
GL	GLASS
GL BLK	GLASS BLOCK
GLZ	GLAZING
GOVT	GOVERNMENT
GP	GROUP
GPD	GALLONS PER DAY
GPH	GALLONS PER HOUR
GPM	GALLONS PER MINUTE
GPS	GALLONS PER SECOND
GR FL	GROUND FLOOR
GR WT	GROSS WEIGHT
GRAN	GRANITE
GRTG	GRATING
GSU	GLAZED STRUCTURAL UNIT
GV	GASOLINE VALVE
GVL	GRAVEL
GWT	GLAZED WALL TILE
GYP BD	GYPSUM BOARD
GYP	GYPSUM
H	HATCH (ROOF), HIGH

HAZ	HAZARD
HB	HOSE BIBB
HC	HEATING COIL, HOLLOW CORE
HCMU	HOLLOW CONCRETE MASONRY UNIT
HCP	HANDICAPPED
HD	HEAD
HDBD	HARDBOARD
HDPE	HIGH DENSITY POLYETHYLENE
HDW	HARDWARE
HDWD	HARDWOOD
HDWL	HEADWALL
HEPA	HIGH EFFICIENCY PARTICULATE AIR (FILTER)
HEX	HEXAGON
HG	MERCURY
HGR	HANGER
HH	HANDHOLE
HID	HIGH INTENSITY DISCHARGE
HM	HOLLOW METAL
HNDRL	HAND RAIL
HORIZ	HORIZONTAL
HP	HEAT PUMP, HIGH POINT, HORSEPOWER
HPS	HIGH PRESSURE SODIUM
HQ	HEADQUARTERS
HS	HIGH STRENGTH
HT	HEIGHT
HVAC	HEATING, VENTILATING & AIR CONDITIONING
HW	HOT WATER
HWP	HOT WATER PUMP
HWY	HIGHWAY
HYD	HYDRANT
Hz	HERTZ
ID	INSIDE DIAMETER, INSIDE DIMENSION
ID NO	IDENTIFICATION NUMBER
IF	INSIDE FACE
IMC	INTERMEDIATE METALLIC CONDUIT
INCAND	INCANDESCENT
INCIN	INCINERATOR
INCL	INCLUDED
INFO	INFORMATION
IN-LB	INCH-POUND
INSTR	INSTRUMENT
INSUL	INSULATION
INT	INTERIOR
INTL	INTERNATIONAL
INV	INVERT
INV EL	INVERT ELEVATION
IP	IRON PIPE
IR	INSIDE RADIUS, INFRARED
J-BOX	JUNCTION BOX
JAN	JANITOR
JAN CLO	JANITOR'S CLOSET
JT	JOINT
KB	KNEE BRACE
KIT	KITCHEN
KLF	KIP(S) PER LINEAR FOOT
KO	KNOCKOUT
KPa	KILOPASCAL
KSF	KIP(S) PER SQUARE FOOT
kV	KILOVOLT
kVA	KILOVOLT-AMPERE
kVAR	KILOVOLT-AMPERE REACTIVE
kW	KILOWATT
kWh	KILOWATT HOUR
kWhm	KILOWATT HOUR METER
L	ANGLE
LA	LIGHTNING ARRESTER
LAB	LABORATORY
LAD	LADDER
LAM	LAMINATE
LAM GL	LAMINATED GLASS
LAT	LATITUDE, LEAVING AIR TEMPERATURE
LAV	LAVATORY
LB	POUND
LF	LINEAR FEET
LH	LEFT HAND
LHS	LEFT HAND SIDE
LIM SW	LIMIT SWITCH
LIN	LINEAR
LINO	LINOLEUM
LIQ	LIQUID
LIRR	LONG ISLAND RAIL ROAD
LL	LIVE LOAD
LLH	LONG LEG HORIZONTAL
LLV	LONG LEG VERTICAL
LNG	LONGITUDE
LP	LIGHT POLE, LOW POINT, LOW PRESSURE
LPT	LOW POINT
LRA	LOCKED ROTOR AMPS
LS	LUMP SUM
LT	LIGHT
LTG	LIGHTING
LT WT	LIGHT WEIGHT
LVR	LOUVER
LWT	LEAVING WATER TEMPERATURE
m^3	CUBIC METER
m	METER
MA	MILLIAMP
MACH	MACHINE
MACH RM	MACHINE ROOM
MAINT	MAINTENANCE
MAG	MAGNET
MAN	MANUAL
MATL	MATERIAL
MAX	MAXIMUM
MB	MAIL BOX, MIXING BOX
MBtuH	THOUSAND BRITISH THERMAL UNITS/HOUR
MC	MOMENT CONNECTION
MCB	MAIN CIRCUIT BREAKER
MCC	MOTOR CONTROL CENTER
MECH	MECHANICAL

MECH RM	MECHANICAL ROOM
MEMB	MEMBRANE
MEZZ	MEZZANINE
MFD	MANUFACTURED
MFG	MANUFACTURING
MFR	MANUFACTURER
MFR REC	MANUFACTURER'S RECOMMENDATION
MG	MOTOR GENERATOR
MGT	MANAGEMENT
MH	MANHOLE
MIC	MICROPHONE
MIN	MINIMUM
MIR	MIRROR
MISC	MISCELLANEOUS
mm	MILLIMETER
mm^3	CUBIC MILLIMETER
MO	MASONRY OPENING
MOD	MODEL, MODIFY
MOD BIT	MODIFIED BITUMEN
MON	MONUMENT
MOT	MOTOR
MOV	MOTOR OPERATED VALVE
MPH	MILE(S) PER HOUR
MPT	MALE PIPE THREAD
MR	MOISTURE RESISTANT
MRT	MARBLE THRESHOLD
MS	MOP SINK
MSL	MEAN SEA LEVEL
MTD	MOUNTED
MTG	MOUNTING
MTL	METAL
MVA	MEGAVOLT AMPERES
MVM	METROCARD VENDING MACHINE (NYCT)
N	NORTH
NA	NOT APPLICABLE
NATL	NATIONAL
NC	NORMALLY CLOSED
NEG	NEGATIVE
NEUT	NEUTRAL
NF	NEAR FACE
NIC	NOT IN CONTRACT
NO	NORMALLY OPEN, NUMBER
NOM	NOMINAL
NON STD	NONSTANDARD
NORM	NORMAL
NRC	NOISE REDUCTION COEFFICIENT
NS	NEAR SIDE
NTS	NOT TO SCALE
NT WT	NET WEIGHT
NYCT	NEW YORK CITY TRANSIT AUTHORITY
OA	OUTSIDE AIR, OVERALL
OAI	OUTSIDE AIR INTAKE
OC	ON CENTER
OCB	OIL CIRCUIT BREAKER
OCC	OCCUPY
OD	OUTSIDE DIAMETER
OF	OUTSIDE FACE
OF/CI	OWNER FURNISHED / CONTRACTOR INSTALLED
OFD	OVERFLOW DRAIN
OFF	OFFICE
OF/OI	OWNER FURNISHED / OWNER INSTALLED
OH	OVERHANG
OL	OVERLOAD
OPH	OPPOSITE HAND
OPNG	OPENING
OPP	OPPOSITE
OPT	OPTIONAL
OR	OUTSIDE RADIUS
ORIG	ORIGINAL
OVC	OVERCURRENT
OVFL	OVERFLOW
OZ	OUNCE
1P	SINGLE POLE
P	POLE, PUMP
PANYNJ	PORT AUTHORITY OF NEW YORK & NEW JERSEY
PARA	PARAGRAPH
PART	PARTIAL
PAT	PATTERN
PB	PANELBOARD, PULL BOX
PC	PIECE, POINT OF CURVE, PORTLAND CEMENT
PCC	POINT OF COMPOUND CURVE
PCF	POUNDS PER CUBIC FOOT
PCT	PERCENT
PD	PRESSURE DROP
PE	PNEUMATIC-ELECTRIC
PED	PEDESTAL
PERF	PERFORATED
PERIM	PERIMETER
PERM	PERMANENT
PERP	PERPENDICULAR
PF	POWER FACTOR
PG	PRESSURE GAGE
PH	PHASE
PHC	PREHEAT COIL
PI	POINT OF INTERSECTION
PIV	POST INDICATOR VALVE
PK GAR	PARKING GARAGE
PL	PROPERTY LINE
PLAM	PLASTIC LAMINATE
PLAS	PLASTER
PLAT	PLATFORM
PLATF	PLATFORM
PLBG	PLUMBING
PLC	PLACE
PLF	POUNDS PER LINEAR FOOT
PLYWD	PLYWOOD
PMF	PROBABLE MAXIMUM FLOOD
PN	PART NUMBER
PNEU	PNEUMATIC
PNL	PANEL
POB	POINT OF BEGINNING
PORC	PORCELAIN

POS	POSITION, POSITIVE
PP	POLYPROPYLENE
PR	PAIR, PUMPED RETURN
PREFAB	PREFABRICATE
PRELIM	PRELIMINARY
PRESS	PRESSURE
PREV	PREVIOUS
PRI	PRIMARY
PRKG	PARKING
PROJ	PROJECT
PROP	PROPELLER
PRV	PRESSURE REDUCING VALVE
PSF	POUND PER SQUARE FOOT
PSI	POUND PER SQUARE INCH
PSIA	POUND PER SQUARE INCH ABSOLUTE
PSIG	POUND PER SQUARE INCH GAGE
PT	PAINT, PRESSURE TREATED
PTD	PAINTED
PTAC	PACKAGE TERMINAL AIR-CONDITIONER
PTN	PARTITION
PVC	POLYVINYL CHLORIDE
PVG	PAVING
PWR	POWER
QA	QUALITY ASSURANCE
QC	QUALITY CONTROL
QT	QUARRY TILE
QTB	QUARRY TILE BASE
QTR	QUARTER
QTY	QUANTITY
QUAD	QUADRANGLE, QUADRANT
R	RADIUS, RISER
RA	RETURN AIR
RAD	RADIAN, RADIATOR
RC	REINFORCED CONCRETE
RCP	REFLECTED CEILING PLAN, REINF CONC PIPE
RCPTN	RECEPTION
RCVR	RECEIVER
RD	ROAD, ROOF DRAIN
RDC	REDUCER
REC	RECESSED
RECIP	RECIPROCAL
RECIRC	RECIRCULATE
RECPT	RECEPTACLE
REC ROOM	RECREATION ROOM
RECT	RECTANGLE
REF	REFERENCE, REFRIGERATION
REFL	REFLECT
REINF	REINFORCE
REM	REMOVABLE
REPL	REPLACE
REQD	REQUIRED
RET	RETAINING, RETURN
REV	REVISION
RFI	REQUEST FOR INFORMATION
RH	RIGHT HAND
RLL	REFRIGERANT LIQUID LINE
RM	ROOM
RMS	ROOT MEAN SQUARE
RMVL	REMOVAL
RND	ROUND
RO	ROUGH OPENING
ROW	RIGHT-OF-WAY
RPM	REVOLUTIONS PER MINUTE
RR	RAILROAD
RSL	REFRIGERANT SUCTION LINE
RT	RIGHT
RTF	RUBBER TILE FLOOR
RV	RELIEF VALVE
RVS	REVERSE
RW	ROADWAY
RWL	RAIN WATER LEADER
S	SOUTH
SAN	SANITARY
SAPC	SUSPENDED ACOUSTICAL PLASTER CEILING
SATC	SUSPENDED ACOUSTICAL TILE CEILING
SB	SPLASH BLOCK
SC	SOLID CORE
SCHED	SCHEDULE
SCHEM	SCHEMATIC
SCMU	SOLID CONCRETE MASONRY UNITS
SCP	SCUPPER
SD	STORM DRAIN
SDL	SADDLE
SDMPR	SMOKE DAMPER
SECT	SECTION
SEP	SEPARATOR, SEPARATE
SF	SQUARE FOOT (FEET)
SHLDR	SHOULDER
SHR	SHOWER
SHT	SHEET
SIM	SIMILAR
SLNT	SEALANT
SLV	SLEEVE
SOLV	SOLENOID VALVE
SP	STANDPIPE
SPC	SUSPENDED PLASTER CEILING
SPDT	SINGLE POLE DOUBLE THROW
SPEC	SPECIFICATION
SPKLR	SPRINKLER
SPKR	SPEAKER
SPLY	SUPPLY
SPRT	SUPPORT
SPST	SINGLE POLE SINGLE THROW
SQ	SQUARE
SQ IN	SQUARE INCH
SQ YD	SQUARE YARD
SS	STORM SEWER
SSP	STAINLESS STEEL PIPE
SST	STAINLESS STEEL
ST	STREET
ST STL	STAINLESS STEEL
STA	STATION

STC	SOUND TRANSMISSION CLASS
STD	STANDARD
STIF	STIFFENER
STIR	STIRRUP
STL	STEEL
STM	STEAM
STOR	STORAGE
ST PR	STATIC PRESSURE
STRUCT	STRUCTURAL
SUCT	SUCTION
SUM	SUMMARY
SUPT	SUPPORT
SURF	SURFACE
SUSP	SUSPEND
SVCE	SERVICE
SW	SIDEWALK, SWITCH
SWBD	SWITCHBOARD
SWDR	SWING DOOR
SWGR	SWITCHGEAR
SWR MH	SEWER MANHOLE
SYM	SYMBOL
SYMM	SYMMETRICAL
SYS	SYSTEM
T	TREAD
TAN	TANGENT
T&B	TOP AND BOTTOM
TC	TERRA COTTA
TD	TEMPERATURE DIFFERENCE, TRENCH DRAIN
TDH	TOTAL DYNAMIC HEAD
TEL	TELEPHONE
TEMP	TEMPERATURE, TEMPORARY
TER	TERRAZZO
TERM	TERMINAL
T&G	TONGUE AND GROOVE
THD	THREAD
THK	THICKNESS
THRES	THRESHOLD
THRU	THROUGH
TO	TOP OF _____
TOC	TOP OF CONCRETE, TOP OF CURB
TOF	TOP OF FOOTING
TOL	TOLERANCE
TOM	TOP OF MASONRY
TOPO	TOPOGRAPHY
TOW	TOP OF WALL
TOS	TOP OF SLAB, TOP OF STEEL
TP	TELEPHONE POLE, TOTAL PRESSURE
TS	TUBE STEEL
TSTAT	THERMOSTAT
TV	TELEVISION
TVM	TICKET VENDING MACHINE (LIRR)
TYP	TYPICAL
UGND	UNDERGROUND
UH	UNIT HEATER
UL	UNDERWRITERS LABORATORIES
UN	UNLESS NOTED
UNAUTHOR'D	UNAUTHORIZED
UNIS	UNIFIED TRANSIT INFORMATION SYSTEM
UNO	UNLESS NOTED OTHERWISE
UP	UTILITY POLE
UR	URINAL
UTIL	UTILITY
V	VOLT
VA	VOLT AMPERES
VAC	VACUUM
VAN	VANITY
VAR	VARIATION, VARIES, VOLT AMPERES REACTIVE
VAV	VARIABLE AIR VOLUME
VB	VACUUM BREAKER, VINYL BASE
VC	VERTICAL CURVE
VCT	VINYL COMPOSITION TILE, VITRIFIED CLAY TILE
VEL	VELOCITY
VENT	VENTILATOR
VERT	VERTICAL
VEST	VESTIBULE
VFD	VARIABLE FREQUENCY DRIVE
VHB	VERY HIGH BOND TAPE
VIB	VIBRATION
VIF	VERIFY IN FIELD
VOL	VOLUME
VR	VAPOR RETARDER
VS	VOLTMETER SWITCH
VTR	VENT THRU ROOF
VWC	VINYL WALL COVERING
W	WASTE, WATT, WEST, WIDE
W/	WITH
WB	WET BULB
WC	WATER CLOSET
WCO	WALL CLEANOUT
WD	WOOD, WOOD DOOR
WDW	WINDOW
WF	WIDE FLANGE
WGL	WIRED GLASS
WH	WALL HYDRANT
WHA	WATER HAMMER ARRESTER
WHM	WATT HOUR METER
WI	WROUGHT IRON
WL	WIND LOAD
WM	WIRE MESH, WATER METER
W/O	WITHOUT
WP	WATER PROOFING, WEATHERPROOF, WORKING POINT
WT	WEIGHT, WIRE TROUGH
WTR	WATER
XFMR	TRANSFORMER
X SECT	CROSS SECTION
YD	YARD, YARD DRAIN
YH	YARD HYDRANT
YR	YEAR

DRAFT - NOT FOR BID OR CONSTRUCTION

BASE TECHNICAL CONCEPT PLANS

THIS IS A PROGRESS DRAWING AND IS NOT INTENDED TO BE RELIED UPON BY ANY PARTY AS INDICATING A FINAL DESIGN OR TO BE INTENDED FOR BIDDING OR CONSTRUCTION PURPOSES. THIS PROGRESS DRAWING IS PROVIDED SOLELY FOR INFORMATION WITHOUT REPRESENTATION OR WARRANTY OF ANY KIND. THIS PROGRESS DRAWING HAS NOT BEEN SUBJECT TO A FORMAL QUALITY CONTROL CHECKING PROCESS.

REV.	DATE	REVISION DESCRIPTION	SHEET NO.
-	-	-	-
-	-	-	-
-	-	-	-
-	-	-	-
-	-	-	-
-	-	-	-
-	-	-	-

THE INFORMATION, INCLUDING ESTIMATED QUANTITIES OF WORK, SHOWN ON THESE SHEETS IS BASED ON LIMITED INVESTIGATIONS BY THE STATE AND IS IN NO WAY WARRANTED TO INDICATE THE CONDITIONS OF ACTUAL QUANTITIES OF WORK WHICH WILL BE REQUIRED.

Plotted Date: $DATE$

DESIGNER/DRAFTER: **JK**

CHECKED BY: **RD**

SCALE AS NOTED

STATE OF CONNECTICUT
DEPARTMENT OF TRANSPORTATION

Filename: $FILEA$

SIGNATURE/ BLOCK:

STV INC.
225 PARK AVENUE SOUTH
NEW YORK, NY 1003

PROJECT TITLE:

STAMFORD
PARKING GARAGE

TOWN: **STAMFORD**

DRAWING TITLE: **ABBREVIATION**

PROJECT NO. **301-0047**

DRAWING NO. **A-003**

SHEET NO.

Border Version: 11/14/08

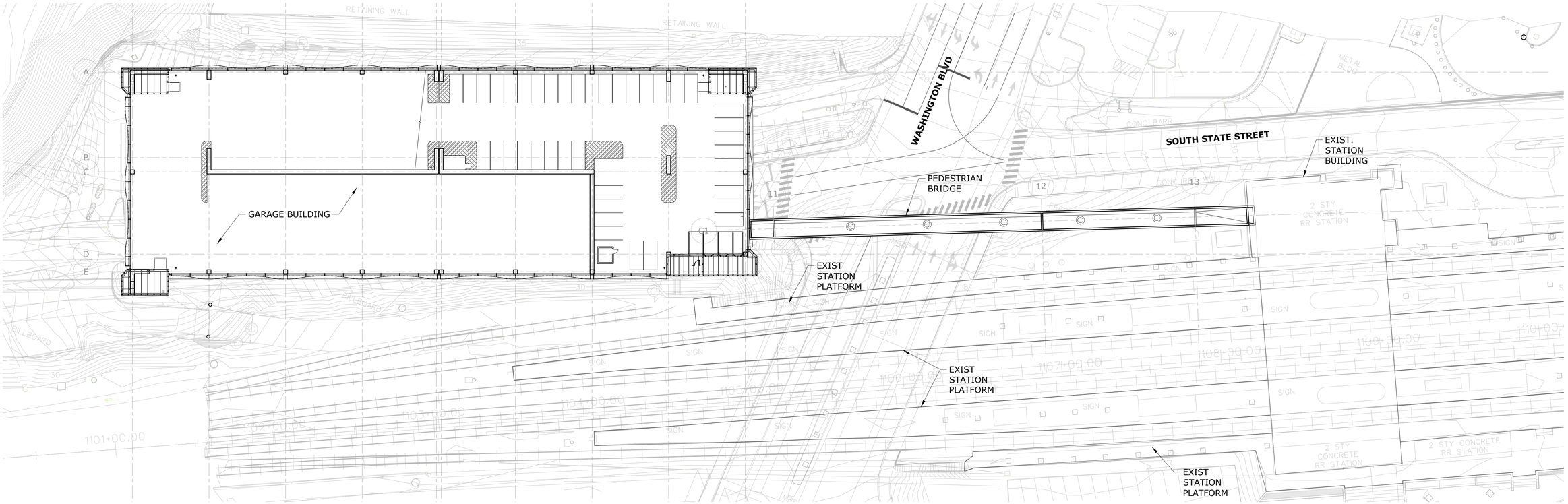

1 SITE PLAN
1/32"=1'-0" 0 16' 32' 64'

DRAFT - NOT FOR BID OR CONSTRUCTION

THIS IS A PROGRESS DRAWING AND IS NOT INTENDED TO BE RELIED UPON BY ANY PARTY AS INDICATING A FINAL DESIGN OR TO BE INTENDED FOR BIDDING OR CONSTRUCTION PURPOSES. THIS PROGRESS DRAWING IS PROVIDED SOLELY FOR INFORMATION WITHOUT REPRESENTATION OR WARRANTY OF ANY KIND. THIS PROGRESS DRAWING HAS NOT BEEN SUBJECT TO A FORMAL QUALITY CONTROL CHECKING PROCESS.

BASE TECHNICAL CONCEPT PLANS

REV.	DATE	REVISION DESCRIPTION	SHEET NO.
-	-	-	-
-	-	-	-
-	-	-	-
-	-	-	-
-	-	-	-
-	-	-	-
-	-	-	-

THE INFORMATION, INCLUDING ESTIMATED QUANTITIES OF WORK, SHOWN ON THESE SHEETS IS BASED ON LIMITED INVESTIGATIONS BY THE STATE AND IS IN NO WAY WARRANTED TO INDICATE THE CONDITIONS OF ACTUAL QUANTITIES OF WORK WHICH WILL BE REQUIRED.

Plotted Date: $DATE$

DESIGNER/DRAFTER: **JK**

CHECKED BY: **RD**

SCALE AS NOTED

STATE OF CONNECTICUT
DEPARTMENT OF TRANSPORTATION

Filename: $FILEA$

SIGNATURE/ BLOCK:

STV INC.
225 PARK AVENUE SOUTH
NEW YORK, NY 1003

PROJECT TITLE:

STAMFORD
PARKING GARAGE

TOWN: **STAMFORD**

DRAWING TITLE: **SITE PLAN**

PROJECT NO. **301-0047**

DRAWING NO. **A-010**

SHEET NO.

Border Version: 11/14/08

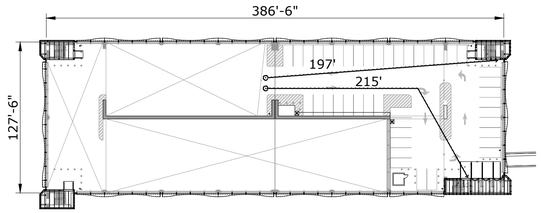

EIGHT FLOOR PLAN

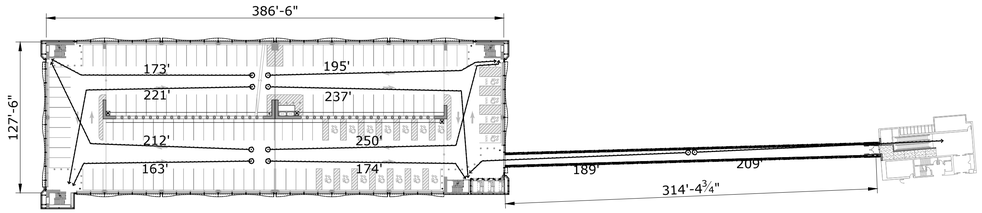

FOURTH FLOOR PLAN

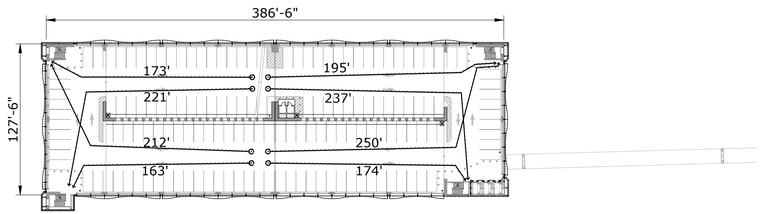

THIRD, FIFTH, SIXTH AND SEVENTH FLOOR PLAN

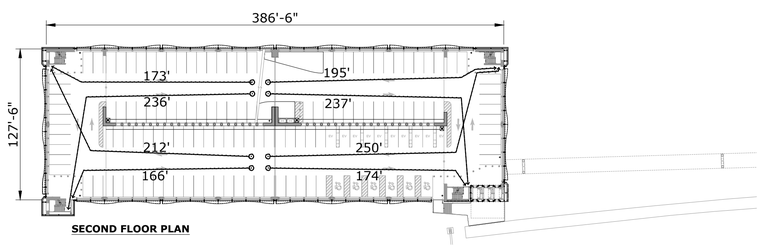

SECOND FLOOR PLAN

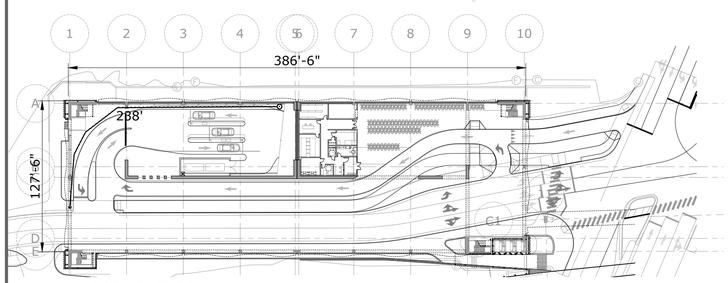

GROUND FLOOR PLAN

Applicable Codes:

- 2018 Building Code of Connecticut (adopts IBC 2015 with amendments)
- 2018 Existing Building Code of Connecticut (adopts IEBC 2015 with amendments)
- 2018 Plumbing Code of Connecticut (adopts IPC 2015 with amendments)
- 2018 Mechanical Code of Connecticut (adopts IMC 2015 with amendments)
- 2018 Energy Conservation Code of Connecticut (adopts IECC 2015 with amendments)
- NFPA 70 National Electrical Code 2017
- 2010 ADA Standards
- OSHA 1904 Recordkeeping
- OSHA 1910 General Industry
- OSHA 1926 Construction

2018 Building Code of Connecticut
ADOPTS WITH AMENDMENTS:
International Building Code 2015 (IBC 2015)

Chapter 3 Use and Occupancy Classification
311.3 Low-hazard storage, Group S-2: Parking garages, open or closed

Chapter 4 Special Detailed Requirements Based on Use and Occupancy
406.4 Public parking garage, classified as an open parking garage, shall also comply with Section 406.5.
406.4.1 Clear height, not less than 7 feet
406.4.2 Guards shall be provided in accordance with Section 1015.
406.4.2 Guards serving as vehicle barriers shall comply with Sections 406.4.3 and 1015.
406.4.3 Vehicle barriers complying with loadings in section 1607.8.3, not less than 2 feet 9 inches in height
406.4.4 Vehicle ramps used as part of means of egress.
406.4.4 Vehicle & circulation ramps shall not exceed a slope of 1:15 (6.67 percent).
406.4.5 Parking surfaces shall be of concrete or similar noncombustible and nonabsorbent materials.
406.4.5 Parking floor area shall be sloped to drain or toward the main vehicle entry doorway.
406.4.6 Mixed occupancy separation. Parking garages shall be separated from other occupancies in accordance with Section 508.1.
406.5 Open parking garages shall comply with Sections 406.5.1 through 406.5.11.
406.5.1 Construction. Open parking garages shall be of Type I, II or IV construction. Open parking garages shall meet the structural design requirements of Chapter 16.
406.5.2 Openings for natural ventilation, per tier
Exterior uniformly distributed openings on two or more sides: 20% min. of total perimeter wall area
Length: 40% min. of the perimeter
Interior walls, uniformly distributed openings: 20% min.
406.5.3 Mixed uses is allowed in the same building as an open parking garage subject to the provisions of 508.1
406.5.4 Area and height are limited as set forth in Chapter 5 for Group S-2 occupancies and Section 508.1.
406.5.4.1 Single use. Where the open parking garage is used exclusively for the parking or storage of private motor vehicles, with no other uses in the building, the area and height shall be permitted to comply with Table 406.5.4, along with increases allowed by Section 406.5.5.
Exception: The grade-level tier is permitted to contain an office, waiting and toilet rooms having a total combined area of not more than 1,000 square feet. Such area need not be separated from the open parking garage.

TABLE 406.5.4
OPEN PARKING GARAGES AREA AND HEIGHT

TYPE OF CONSTRUCTION	AREA PER TIER (square feet)	HEIGHT (in tiers)		
		Ramp access	Mechanical access	
			Automatic sprinkler system	
			No	Yes
IA	Unlimited	Unlimited	Unlimited	Unlimited
IB	Unlimited	12 tiers	12 tiers	18 tiers
IIA	50,000	10 tiers	10 tiers	15 tiers
IIB	50,000	8 tiers	8 tiers	12 tiers
IV	50,000	4 tiers	4 tiers	4 tiers

406.5.5 Allowable area and height of open parking garages shall be increased as follows:
Garages with sides open on three-fourths of the building's perimeter: 25% in area & one tier in height.
Garages with sides open around the entire building's perimeter: 50% in area & one tier in height.
Conditions to be met for the increase:

1. Total area of openings along the side shall not be less than 50% of the side at each tier
2. Openings shall be equally distributed along the length of the tier
3. For purposes of calculating the interior area of the side, the height shall not exceed 7 feet
4. Allowable tier areas in Table 406.5.4 shall be increased for open parking garages constructed to heights less than the table maximum
5. The gross tier area of the garage shall not exceed that permitted for the higher structure
6. At minimum, three sides of each larger tier shall have continuous horizontal openings not less than 30 inches in clear height extending for not less than 80 percent of the length of the sides and no part of such larger tier shall be more than 200 feet horizontally from such an opening.
7. In addition, each such opening shall face a street or yard accessible to a street with a width of not less than 30 feet for the full length of the opening, and standpipes shall be provided in each such tier.

406.5.6 Fire separation distance, per Chapter 6
406.5.7 Means of egress. Where persons other than parking attendants are permitted, open parking garages shall meet the means of egress requirements of Chapter 10. Where no persons other than parking attendants are permitted, there shall be no fewer than two exit stairways. Each exit stairway shall be not less than 36 inches in width.
406.5.8 Standpipe system. An open parking garage shall be equipped with a standpipe system as required by Section 905.3.
406.5.9 Enclosure of vertical openings. Enclosure shall not be required for vertical openings except as specified in Section 406.5.7.
406.5.10 Ventilation, other than the percentage of openings specified in Section 406.5.2, shall not be required.

Chapter 5 General Building Heights and Areas
504.3 Building height in feet
Use Group S-2, Type IB, NS = 160 feet

504.4 Allowable number of stories
Use Group S-2, Type IB, NS = 11 stories

506.2 Allowable floor area (without increase factors)
Use Group S-2, Type IB, NS = 79,000 SF

Based on tables 504.3, 504.4 & 506.2:
Construction Type IB is needed to meet, height, stories & area requirements

Occupancies other than S-2 can either be:

- Non-separated if less than 1000 SF
- Or separated per table 508.4 (2 hours is required for NS buildings)

508.4 Separated Occupancies
Required separation between occupancies S-2 and B/F-1/S-1 = 2 hours for NS buildings

Chapter 6 Types of Construction
601 Construction Type IB is required
Primary structural framing: 2 hours
Bearing walls, exterior & interior: 2 hours
Exterior non-bearing walls for fire separation distance > 30 feet: 0 hours
Interior non-bearing walls: 0 hours
Floor construction: 2 hours
Roof construction: 1 hours

Chapter 7 Fire and Smoke Protection Features
704.9 Impact Protection
Exempt from fire protective covering of a structural members subject to impact damage from moving vehicles, Exception: Corner protection is not required on concrete columns in open or enclosed parking garages.
705.8 Openings
Exception g: unlimited openings in an open parking structure with a fire separation distance of 10 feet or more
705.8.5 Vertical Separation of Openings
Exception 3: Not required in open parking garages

712.1.10 Parking Garages
Vertical openings at ramps in parking garages complying with Sections 406.5 and 406.6:
712.1.10.1 Automobile Ramps: Openings are permitted
712.1.10.2 Elevators: Openings for elevator hoistways are permitted
712.1.10.3 Duct Systems: Openings for mechanical exhaust or supply duct systems are permitted

715 Fire-Resistant Joint Systems: Not required based on exception #5

5. Floors and ramps within open parking garages constructed per Sections 406.5 and 406.6

717.5.3 Shaft Enclosures Exceptions:
Fire dampers are not required at penetrations of parking garage exhaust or supply shafts
Smoke dampers are not required at penetration of parking garage exhaust or supply shafts

722.2.2.1 Reinforced and Prestressed Floors and Roofs
Exception: Minimum thickness is not required in open parking garages constructed in accordance with Sections 406.5 and 406.6

Chapter 9 Fire Protection Systems
903.2.11.3 Buildings 55 Feet or More in Height
Exempt from automatic sprinkler system requirements per Exceptions 1
1. Open parking structures.

Section 905 Standpipe Systems
905.3.1 Height
Exempt from Class III standpipe systems requirement per Exceptions 2 & 3

2. Class I manual standpipes are allowed in open parking garages not more than 150 feet above grade
3. Class I manual dry standpipes are allowed in open parking garages that are subject to freezing

907.2.13 High-Rise Buildings
Exempt from automatic smoke detection system per exception 2
2. Open parking garages in accordance with Section 406.5.

915.1.6 Exempt Garages (from Carbon Monoxide detection system)

Chapter 10 Means of Egress
Section 1003 General Means of Egress
1003.2 Ceiling Height (7'-0" Minimum), based on Exception 7

TABLE 1004.1.2 MAXIMUM FLOOR AREA ALLOWANCES PER OCCUPANT
Occupant load factor for parking garages is 200 SF gross per person
Occupant load per floor: 52,000 SF / 200 = 260 persons

Section 1005 Means of Egress Sizing
1005.3 Required Capacity Based on Occupant Load
1005.3.1 Stairways
0.3" per occupant, 0.3 x 260 = 78" minimum is required for each story
Provided 4 stairs x 48" width each = 192" at each story

1005.3.2 Other Egress Components
0.2" per occupant, 0.2 x 260 = 52" minimum is required for each story
Provided 4 doors x 36" width each = 144"

1006.2.2.5 Vehicular Ramps
Vehicular ramps shall not be considered as an exit access ramp unless pedestrian facilities are provided.

Table 1006.3.1 Minimum number of exits per story
1 - 500: 2 exits (four exits are provided)

Section 1009 Accessible Means of Egress
1009.1 Accessible Means of Egress Required
1009.3 Stairways
Shall have a clear width of 48 inches minimum between handrails
Exceptions: 6. Areas of refuge are not required at stairways serving open parking garages.

1009.4 Elevators
Shall comply with the emergency operation and signaling device requirements of Section 2.27 of ASME A17.1/CSA B44. Standby power shall be provided in accordance with Chapter 27 and Section 3003.
Exceptions: 1. Areas of refuge are not required at the elevator in open parking garages.

Section 1012 Ramps
1012.1 Scope
Ramps used as a component of a means of egress.
Exceptions:
2. Curb ramps shall comply with ICC A117.1.
3. Vehicle ramps in parking garages are permitted for pedestrian exit access
1012.2 Slope
Ramps used as part of a means of egress: not steeper than 1:12
Other pedestrian ramps: 1:8 maximum
1012.3 Cross Slope (Not required per exception 3)

Section 1015 Guards
1015.2 Guardrail is required for difference in floor elevations of 30" or more
1015.3 Height 42" minimum

Section 1017 Exit Access Travel Distance
Table 1017.2 For occupancy S-2, W/O Sprinkler: 300 feet

Section 1020 Corridors
1020.1 Construction Fire-resistance rated walls are not required per exception 3
3. Fire-resistance rating is not required for corridors in open parking garages.

1020.4 Dead Ends
20 feet maximum, or length to width not exceeding 2.5

Chapter 11 Accessibility

Chapter 31 Special Construction
Section 3104 Pedestrian Walkways and Tunnels
3104.1 General
this section shall apply to connections between buildings such as pedestrian walkways or tunnels, located at, above or below grade level, that are used as a means of travel by persons. The pedestrian walkway shall not contribute to the building area or the number of stories or height of connected buildings.

3104.2 Separate Structures
Buildings connected by pedestrian walkways or tunnels shall be considered to be separate structures.

3104.3 Construction
The pedestrian walkway shall be of noncombustible construction.

3104.5 Connections of Pedestrian Walkways to Buildings:
shall comply with Section 3104.5.1, 3104.5.2, 3104.5.3 or 3104.5.4.
3104.5.1 Fire Barriers : separated from the building by 2- hour fire barriers
3104.5.1.1 Exterior Walls: to extend 10 feet min. in every direction surrounding the perimeter of the pedestrian walkway.
3104.5.1.2 Openings in Exterior Walls of Connected Buildings: 3/4-hour fire protection rating in accordance with Section 716.
3104.5.1.3 Supporting Construction: The fire barrier shall be supported by construction as required by Section 707.5.1.

3104.5.2 Alternative Separation (ruled out - requires sprinkler)
3104.5.3 Open Sides on Walkway (ruled out - N/S walkway roof can't be more than 40 feet above grade)
3104.5.4 Exterior Walls Greater Than 2 Hours (ruled out - requires sprinkler)

Chapter 32 Encroachments into the Public Right-Of-Way
3202.3.4 Pedestrian Walkways
the installation of a pedestrian walkway over a public right-of-way shall be subject to the approval of the applicable governing authority. The vertical clearance from the public right-of-way to the lowest part of a pedestrian walkway shall be not less than 15 feet

403.3 Required Public Toilet Facilities
Customers, patrons and bisitors shall be provided with public toilet facilities and tenant spaces intended for public utilization. The number of plumbing fixtures located within the required toilet facilities shall be provided in accordance with Section 403 for all users.
Employees shall be provided with toilet facilities in all occupancies. Employee toilet facilities shall be either separate or combined employee and pubic toilet facilities.

Exception: Public toilet facilities shall not be required in:

1. Open or enclosed parking garages where there are no parking attendants.
2. Structures and tenant spaces intended for quick transactions, including takeout, pickup and drop-off, having a public access area less than or equal to 300 square feet (28 m²)

DRAFT - NOT FOR BID OR CONSTRUCTION

BASE TECHNICAL CONCEPT PLANS

THIS IS A PROGRESS DRAWING AND IS NOT INTENDED TO BE RELIED UPON BY ANY PARTY AS INDICATING A FINAL DESIGN OR TO BE INTENDED FOR BIDDING OR CONSTRUCTION PURPOSES. THIS PROGRESS DRAWING IS PROVIDED SOLELY FOR INFORMATION WITHOUT REPRESENTATION OR WARRANTY OF ANY KIND. THIS PROGRESS DRAWING HAS NOT BEEN SUBJECT TO A FORMAL QUALITY CONTROL CHECKING PROCESS.

REV.	DATE	REVISION DESCRIPTION	SHEET NO.
-	-	-	-
-	-	-	-
-	-	-	-
-	-	-	-
-	-	-	-
-	-	-	-
-	-	-	-

THE INFORMATION, INCLUDING ESTIMATED QUANTITIES OF WORK, SHOWN ON THESE SHEETS IS BASED ON LIMITED INVESTIGATIONS BY THE STATE AND IS IN NO WAY WARRANTED TO INDICATE THE CONDITIONS OF ACTUAL QUANTITIES OF WORK WHICH WILL BE REQUIRED.

Plotted Date: $DATE$

DESIGNER/DRAFTER: **JK**
CHECKED BY: **RD**
SCALE AS NOTED

STATE OF CONNECTICUT
DEPARTMENT OF TRANSPORTATION

Filename: $FILEA$

SIGNATURE/ BLOCK:

STV INC.
225 PARK AVENUE SOUTH
NEW YORK, NY 1003

PROJECT TITLE:
STAMFORD
PARKING GARAGE

TOWN: **STAMFORD**

DRAWING TITLE: **CODE AND LIFE SAFETY**

PROJECT NO. **301-0047**
DRAWING NO. **A-011**
SHEET NO.

Border Version: 11/14/08

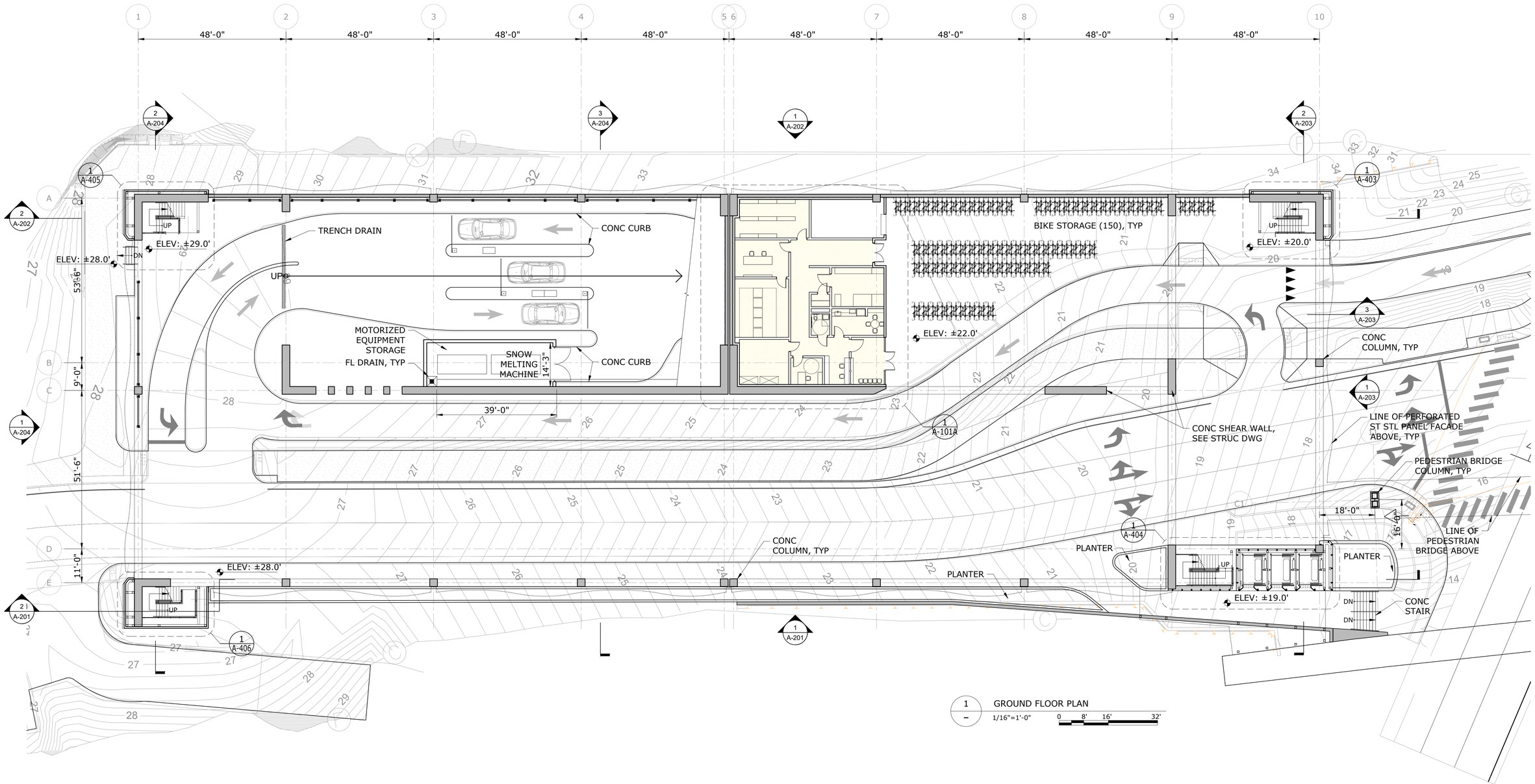

GENERAL NOTES

1. METAL PANEL FACADE INFORMATION, SEE DWG A-501, A-502.
2. ALL CONC CURB TO BE 6" HEIGHT.
3. ALL BOLLARDS TO HAVE 5' CLEAR BETWEEN EACH BOLLARDS.
4. ALL STRIPING AND ARROW SIGNS ON THE FLOOR, SEE CIVIL DWGS.
5. CRASH GUARD INFORMATION, SEE DWG S-302.
6. ALL SITE WORK, SEE CIVIL DWGS.

DRAFT - NOT FOR BID OR CONSTRUCTION

THIS IS A PROGRESS DRAWING AND IS NOT INTENDED TO BE RELIED UPON BY ANY PARTY AS INDICATING A FINAL DESIGN OR TO BE INTENDED FOR BIDDING OR CONSTRUCTION PURPOSES. THIS PROGRESS DRAWING IS PROVIDED SOLELY FOR INFORMATION WITHOUT REPRESENTATION OR WARRANTY OF ANY KIND. THIS PROGRESS DRAWING HAS NOT BEEN SUBJECT TO A FORMAL QUALITY CONTROL CHECKING PROCESS.

BASE TECHNICAL CONCEPT PLANS

REV.	DATE	REVISION DESCRIPTION	SHEET NO.
-	-	-	-
-	-	-	-
-	-	-	-
-	-	-	-
-	-	-	-
-	-	-	-
-	-	-	-

THE INFORMATION, INCLUDING ESTIMATED QUANTITIES OF WORK, SHOWN ON THESE SHEETS IS BASED ON LIMITED INVESTIGATIONS BY THE STATE AND IS IN NO WAY WARRANTED TO INDICATE THE CONDITIONS OF ACTUAL QUANTITIES OF WORK WHICH WILL BE REQUIRED.

Plotted Date: $DATE$

DESIGNER/DRAFTER: **JK**

CHECKED BY: **RD**

SCALE AS NOTED

STATE OF CONNECTICUT
DEPARTMENT OF TRANSPORTATION

Filename: $FILEA$

SIGNATURE/ BLOCK:

STV INC.
225 PARK AVENUE SOUTH
NEW YORK, NY 1003

PROJECT TITLE:

STAMFORD PARKING GARAGE

TOWN: **STAMFORD**

DRAWING TITLE: **GROUND FLOOR PLAN**

PROJECT NO. **301-0047**

DRAWING NO. **A-101**

SHEET NO.

Border Version: 11/14/08

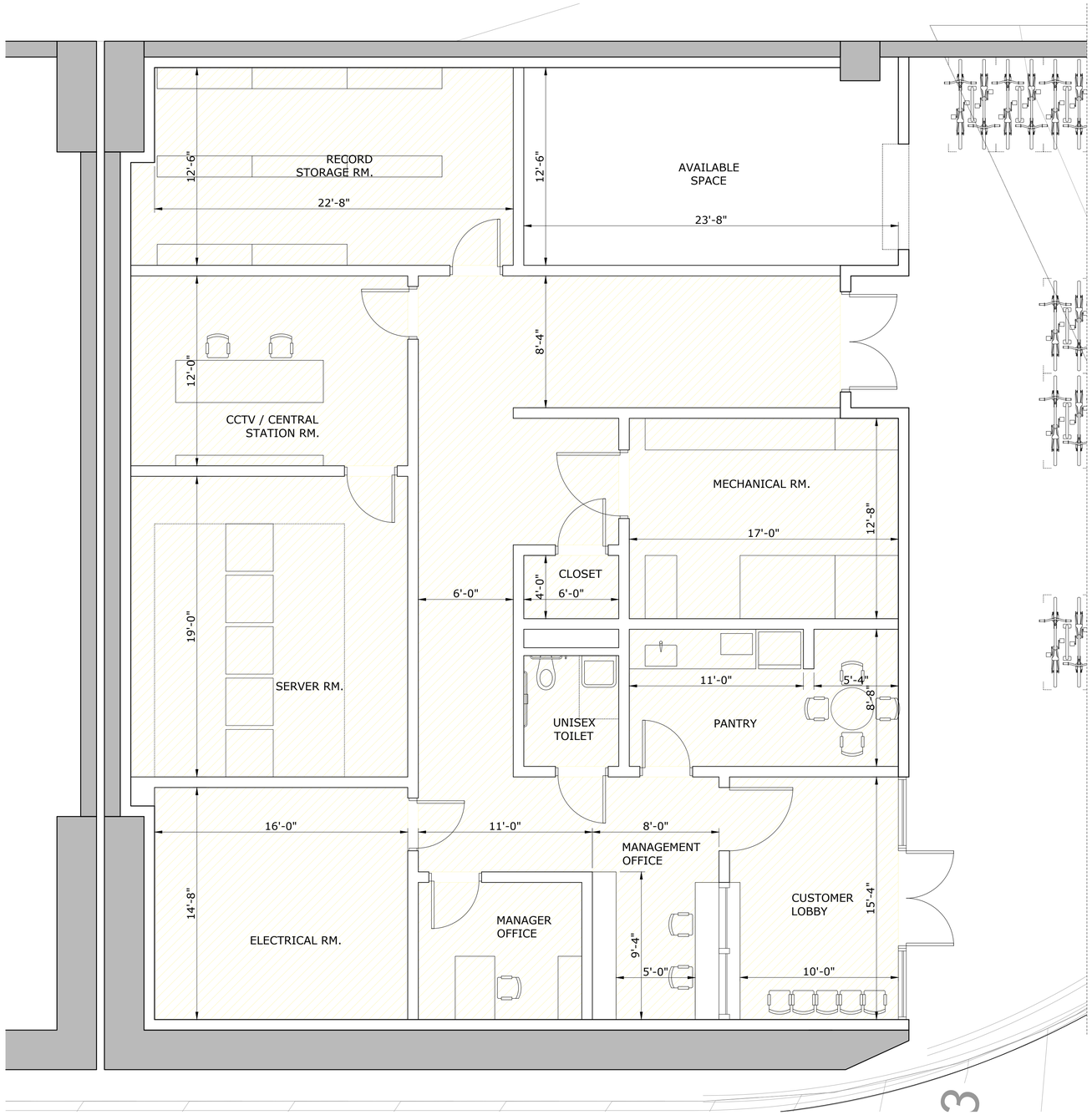

1
A-101A
ENLARGED BOH FLOOR PLAN
1/4"=1'-0"
0 2' 4' 8'

THIS IS A PROGRESS DRAWING AND IS NOT INTENDED TO BE RELIED UPON BY ANY PARTY AS INDICATING A FINAL DESIGN OR TO BE INTENDED FOR BIDDING OR CONSTRUCTION PURPOSES. THIS PROGRESS DRAWING IS PROVIDED SOLELY FOR INFORMATION WITHOUT REPRESENTATION OR WARRANTY OF ANY KIND. THIS PROGRESS DRAWING HAS NOT BEEN SUBJECT TO A FORMAL QUALITY CONTROL CHECKING PROCESS.

DRAFT - NOT FOR BID OR CONSTRUCTION

BASE TECHNICAL CONCEPT PLANS

REV.	DATE	REVISION DESCRIPTION	SHEET NO.
-	-	-	-
-	-	-	-
-	-	-	-
-	-	-	-
-	-	-	-
-	-	-	-
-	-	-	-

THE INFORMATION, INCLUDING ESTIMATED QUANTITIES OF WORK, SHOWN ON THESE SHEETS IS BASED ON LIMITED INVESTIGATIONS BY THE STATE AND IS IN NO WAY WARRANTED TO INDICATE THE CONDITIONS OF ACTUAL QUANTITIES OF WORK WHICH WILL BE REQUIRED.

Plotted Date: $DATE$

DESIGNER/DRAFTER: **JK**

CHECKED BY: **RD**

SCALE AS NOTED

STATE OF CONNECTICUT
DEPARTMENT OF TRANSPORTATION

Filename: $FILEA$

SIGNATURE/
BLOCK:

STV INC.
225 PARK AVENUE SOUTH
NEW YORK, NY 1003

PROJECT TITLE:

STAMFORD
PARKING GARAGE

TOWN: **STAMFORD**

DRAWING TITLE: **ENLARGED BOH FLOOR PLAN**

PROJECT NO. **301-0047**

DRAWING NO. **A-101A**

SHEET NO.

Border Version: 11/14/08

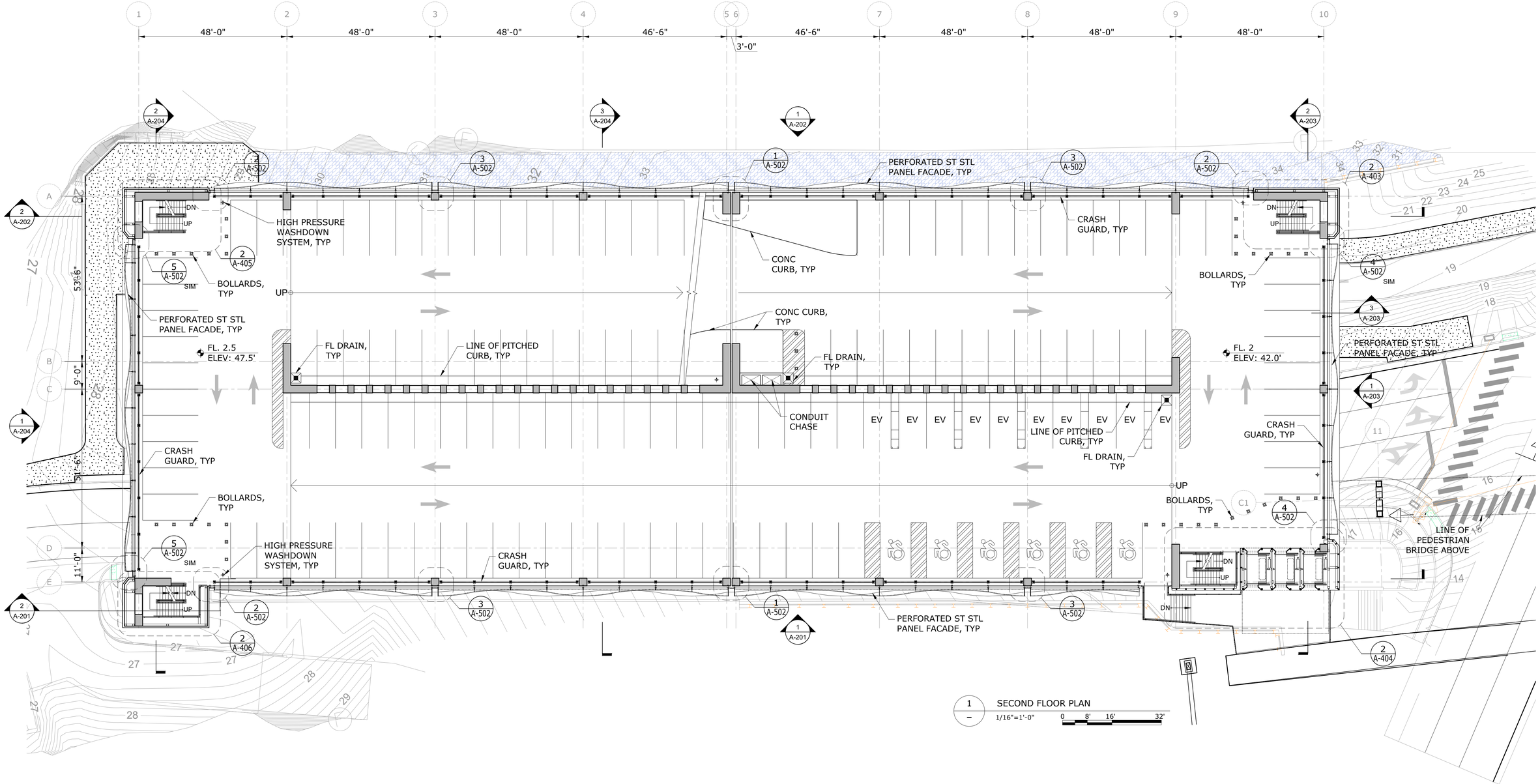

1 SECOND FLOOR PLAN
1/16"=1'-0"

GENERAL NOTES

1. METAL PANEL FACADE INFORMATION, SEE DWG A-501, A-502.
2. ALL CONC CURB TO BE 6" HEIGHT.
3. ALL BOLLARDS TO HAVE 5' CLEAR BETWEEN EACH BOLLARDS.
4. ALL STRIPING AND ARROW SIGNS ON THE FLOOR, SEE CIVIL DWGS.
5. CRASH GUARD INFORMATION, SEE DWG S-302.
6. ALL SITE WORK, SEE CIVIL DWGS.

DRAFT - NOT FOR BID OR CONSTRUCTION

THIS IS A PROGRESS DRAWING AND IS NOT INTENDED TO BE RELIED UPON BY ANY PARTY AS INDICATING A FINAL DESIGN OR TO BE INTENDED FOR BIDDING OR CONSTRUCTION PURPOSES. THIS PROGRESS DRAWING IS PROVIDED SOLELY FOR INFORMATION WITHOUT REPRESENTATION OR WARRANTY OF ANY KIND. THIS PROGRESS DRAWING HAS NOT BEEN SUBJECT TO A FORMAL QUALITY CONTROL CHECKING PROCESS.

BASE TECHNICAL CONCEPT PLANS

REV.	DATE	REVISION DESCRIPTION	SHEET NO.
-	-	-	-
-	-	-	-
-	-	-	-
-	-	-	-
-	-	-	-
-	-	-	-
-	-	-	-

THE INFORMATION, INCLUDING ESTIMATED QUANTITIES OF WORK, SHOWN ON THESE SHEETS IS BASED ON LIMITED INVESTIGATIONS BY THE STATE AND IS IN NO WAY WARRANTED TO INDICATE THE CONDITIONS OF ACTUAL QUANTITIES OF WORK WHICH WILL BE REQUIRED.

Plotted Date: $DATE$

DESIGNER/DRAFTER: **JK**

CHECKED BY: **RD**

SCALE AS NOTED

STATE OF CONNECTICUT
DEPARTMENT OF TRANSPORTATION

Filename: $FILEA$

SIGNATURE/BLOCK:

STV INC.
225 PARK AVENUE SOUTH
NEW YORK, NY 1003

PROJECT TITLE:

STAMFORD PARKING GARAGE

TOWN: **STAMFORD**

DRAWING TITLE: **SECOND FLOOR PLAN**

PROJECT NO. **301-0047**

DRAWING NO. **A-102**

SHEET NO.

Border Version: 11/14/08

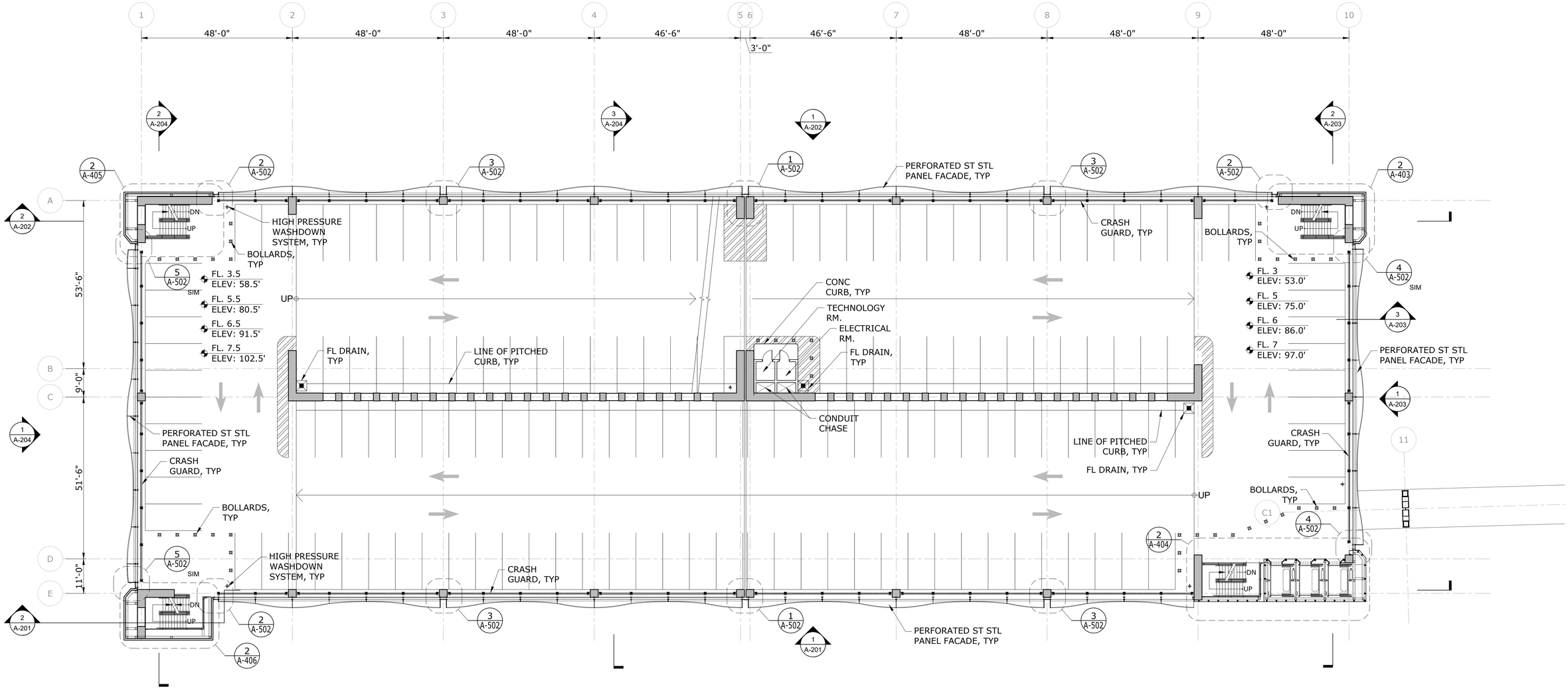

1 THIRD, FIFTH, SIXTH AND SEVENTH FLOOR PLAN
1/16"=1'-0" 0 8' 16' 32'

GENERAL NOTES

1. METAL PANEL FACADE INFORMATION, SEE DWG A-501, A-502.
2. ALL CONC CURB TO BE 6" HEIGHT.
3. ALL BOLLARDS TO HAVE 5' CLEAR BETWEEN EACH BOLLARDS.
4. ALL STRIPING AND ARROW SIGNS ON THE FLOOR, SEE CIVIL DWGS.
5. CRASH GUARD INFORMATION, SEE DWG S-302.

DRAFT - NOT FOR BID OR CONSTRUCTION

BASE TECHNICAL CONCEPT PLANS

THIS IS A PROGRESS DRAWING AND IS NOT INTENDED TO BE RELIED UPON BY ANY PARTY AS INDICATING A FINAL DESIGN OR TO BE INTENDED FOR BIDDING OR CONSTRUCTION PURPOSES. THIS PROGRESS DRAWING IS PROVIDED SOLELY FOR INFORMATION WITHOUT REPRESENTATION OR WARRANTY OF ANY KIND. THIS PROGRESS DRAWING HAS NOT BEEN SUBJECT TO A FORMAL QUALITY CONTROL CHECKING PROCESS.

REV.	DATE	REVISION DESCRIPTION	SHEET NO.
-	-	-	-
-	-	-	-
-	-	-	-
-	-	-	-
-	-	-	-
-	-	-	-
-	-	-	-

THE INFORMATION, INCLUDING ESTIMATED QUANTITIES OF WORK, SHOWN ON THESE SHEETS IS BASED ON LIMITED INVESTIGATIONS BY THE STATE AND IS IN NO WAY WARRANTED TO INDICATE THE CONDITIONS OF ACTUAL QUANTITIES OF WORK WHICH WILL BE REQUIRED.

Plotted Date: $DATE$

DESIGNER/DRAFTER: **JK**

CHECKED BY: **RD**

SCALE AS NOTED

STATE OF CONNECTICUT
DEPARTMENT OF TRANSPORTATION

Filename: $FILEA$

SIGNATURE/ BLOCK:

STV INC.
225 PARK AVENUE SOUTH
NEW YORK, NY 1003

PROJECT TITLE:
STAMFORD PARKING GARAGE

TOWN: **STAMFORD**

DRAWING TITLE: **THIRD, FIFTH, SIXTH, SEVENTH FLOOR PLAN**

PROJECT NO. **301-0047**

DRAWING NO. **A-103**

SHEET NO.

Border Version: 11/14/08

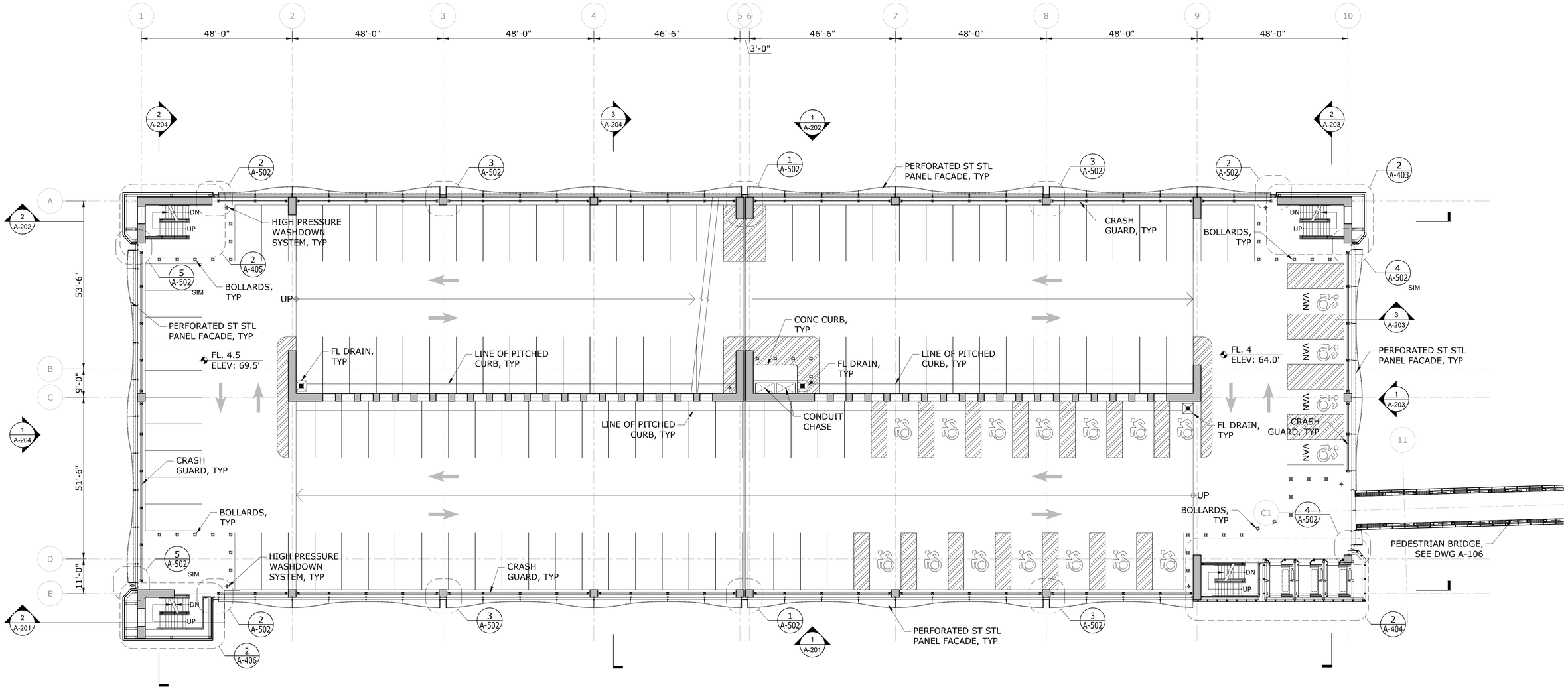

1 FOURTH FLOOR PLAN
1/16"=1'-0"

GENERAL NOTES

1. METAL PANEL FACADE INFORMATION, SEE DWG A-501, A-502.
2. ALL CONC CURB TO BE 6" HEIGHT.
3. ALL BOLLARDS TO HAVE 5' CLEAR BETWEEN EACH BOLLARDS.
4. ALL STRIPING AND ARROW SIGNS ON THE FLOOR, SEE CIVIL DWGS.
5. CRASH GUARD INFORMATION, SEE DWG S-302.

DRAFT - NOT FOR BID OR CONSTRUCTION

THIS IS A PROGRESS DRAWING AND IS NOT INTENDED TO BE RELIED UPON BY ANY PARTY AS INDICATING A FINAL DESIGN OR TO BE INTENDED FOR BIDDING OR CONSTRUCTION PURPOSES. THIS PROGRESS DRAWING IS PROVIDED SOLELY FOR INFORMATION WITHOUT REPRESENTATION OR WARRANTY OF ANY KIND. THIS PROGRESS DRAWING HAS NOT BEEN SUBJECT TO A FORMAL QUALITY CONTROL CHECKING PROCESS.

BASE TECHNICAL CONCEPT PLANS

REV.	DATE	REVISION DESCRIPTION	SHEET NO.
-	-	-	-
-	-	-	-
-	-	-	-
-	-	-	-
-	-	-	-
-	-	-	-
-	-	-	-

THE INFORMATION, INCLUDING ESTIMATED QUANTITIES OF WORK, SHOWN ON THESE SHEETS IS BASED ON LIMITED INVESTIGATIONS BY THE STATE AND IS IN NO WAY WARRANTED TO INDICATE THE CONDITIONS OF ACTUAL QUANTITIES OF WORK WHICH WILL BE REQUIRED.

Plotted Date: $DATE$

DESIGNER/DRAFTER: **JK**

CHECKED BY: **RD**

SCALE AS NOTED

STATE OF CONNECTICUT
DEPARTMENT OF TRANSPORTATION

Filename: $FILEA$

SIGNATURE/ BLOCK:

STV INC.
225 PARK AVENUE SOUTH
NEW YORK, NY 1003

PROJECT TITLE:

STAMFORD PARKING GARAGE

TOWN: **STAMFORD**

DRAWING TITLE: **FOURTH FLOOR PLAN**

PROJECT NO. **301-0047**

DRAWING NO. **A-104**

SHEET NO.

Border Version: 11/14/08

GENERAL NOTES

1. MTL PANEL FACADE INFORMATION, SEE DWG A-501, A-502.
2. ALL CONC CURB TO BE 6" HEIGHT.
3. ALL BOLLARDS TO HAVE 5' CLEAR BETWEEN EACH BOLLARDS.
4. ALL STRIPING AND ARROW SIGNS ON THE FLOOR, SEE CIVIL DWGS.
5. CRASH GUARD INFORMATION, SEE DWG S-302.

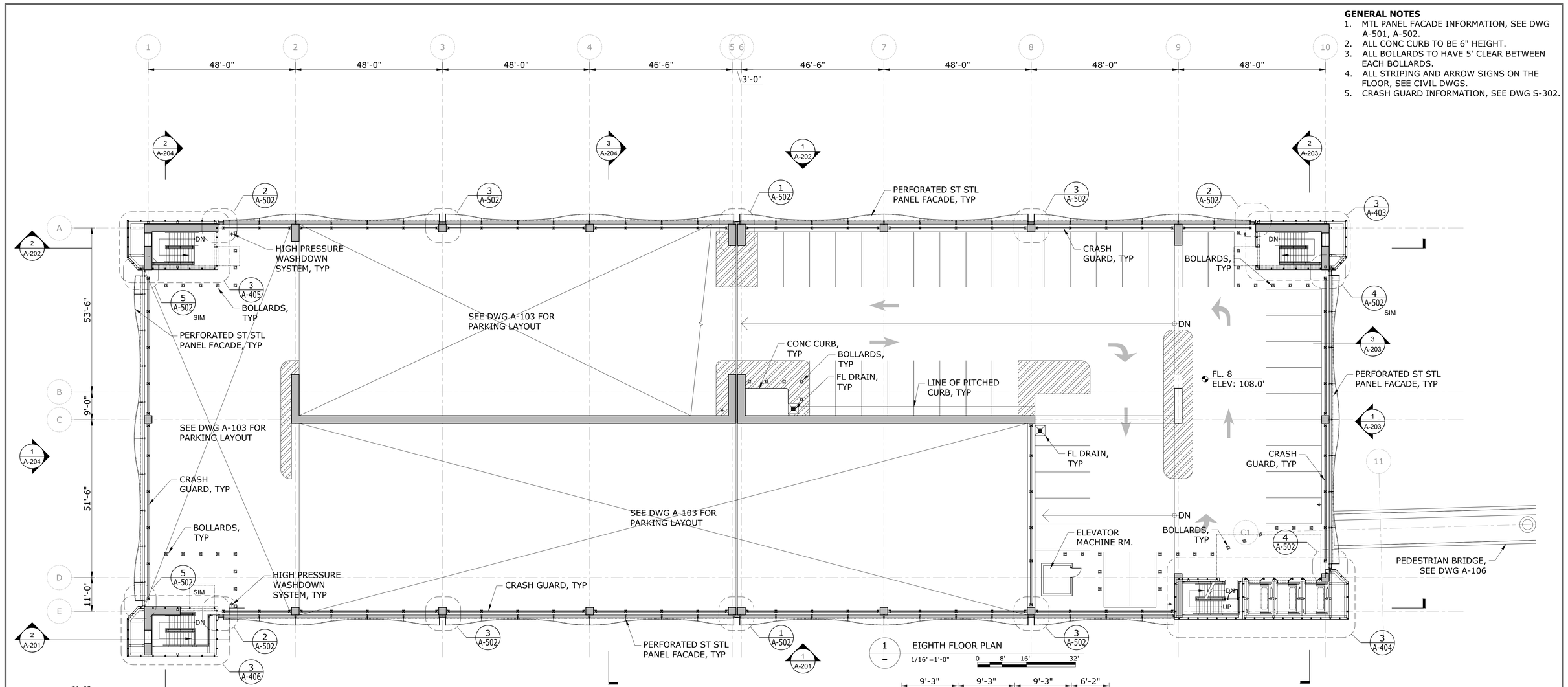

1 EIGHTH FLOOR PLAN
1/16"=1'-0"

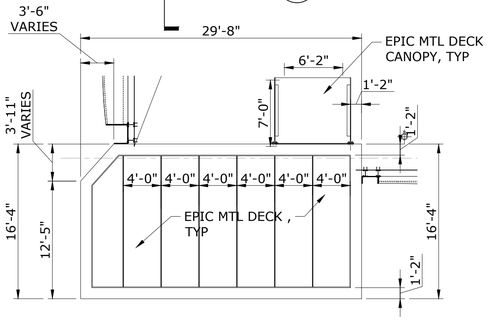

5 STAIR 4 ROOF PLAN
1/8"=1'-0"

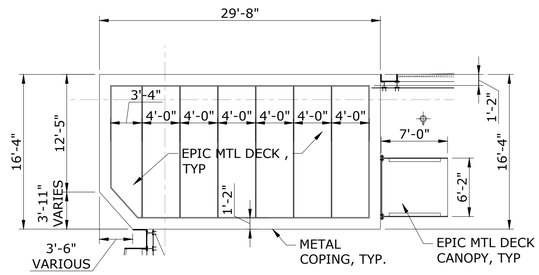

4 STAIR 3 ROOF PLAN
1/8"=1'-0"

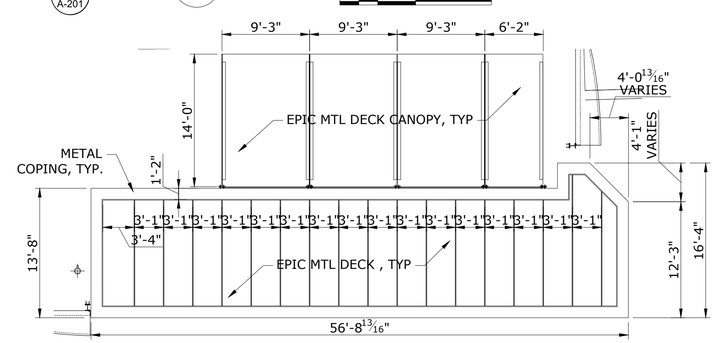

3 STAIR 2 ROOF PLAN
1/8"=1'-0"

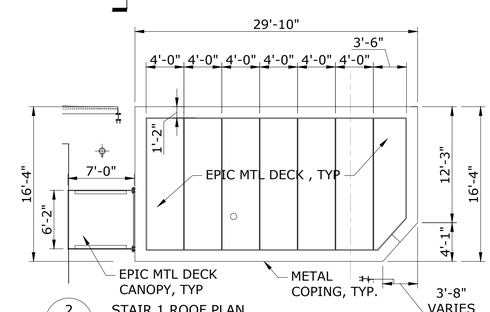

2 STAIR 1 ROOF PLAN
1/8"=1'-0"

DRAFT - NOT FOR BID OR CONSTRUCTION

BASE TECHNICAL CONCEPT PLANS

THIS IS A PROGRESS DRAWING AND IS NOT INTENDED TO BE RELIED UPON BY ANY PARTY AS INDICATING A FINAL DESIGN OR TO BE INTENDED FOR BIDDING OR CONSTRUCTION PURPOSES. THIS PROGRESS DRAWING IS PROVIDED SOLELY FOR INFORMATION WITHOUT REPRESENTATION OR WARRANTY OF ANY KIND. THIS PROGRESS DRAWING HAS NOT BEEN SUBJECT TO A FORMAL QUALITY CONTROL CHECKING PROCESS.

REV.	DATE	REVISION DESCRIPTION	SHEET NO.
-	-	-	-
-	-	-	-
-	-	-	-
-	-	-	-
-	-	-	-
-	-	-	-
-	-	-	-

THE INFORMATION, INCLUDING ESTIMATED QUANTITIES OF WORK, SHOWN ON THESE SHEETS IS BASED ON LIMITED INVESTIGATIONS BY THE STATE AND IS IN NO WAY WARRANTED TO INDICATE THE CONDITIONS OF ACTUAL QUANTITIES OF WORK WHICH WILL BE REQUIRED.

Plotted Date: $DATE$

DESIGNER/DRAFTER: **JK**

CHECKED BY: **RD**

SCALE AS NOTED

STATE OF CONNECTICUT
DEPARTMENT OF TRANSPORTATION

Filename: $FILEA$

SIGNATURE/ BLOCK:

STV INC.
225 PARK AVENUE SOUTH
NEW YORK, NY 1003

PROJECT TITLE:

STAMFORD PARKING GARAGE

TOWN: **STAMFORD**

DRAWING TITLE: **EIGHTH FLOOR PLAN**

PROJECT NO. **301-0047**

DRAWING NO. **A-105**

SHEET NO.

Border Version: 11/14/08

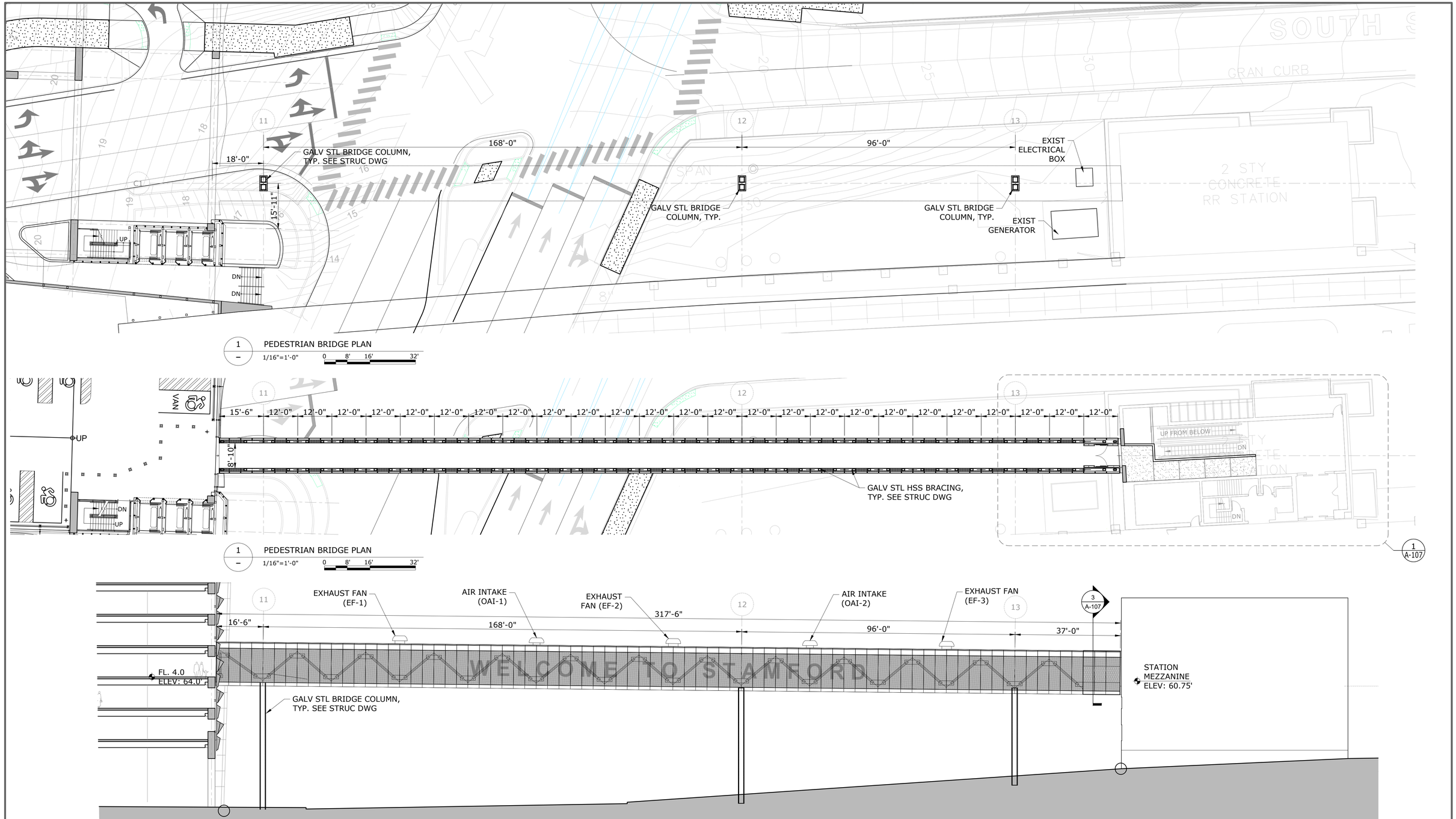

DRAFT - NOT FOR BID OR CONSTRUCTION

BASE TECHNICAL CONCEPT PLANS

THIS IS A PROGRESS DRAWING AND IS NOT INTENDED TO BE RELIED UPON BY ANY PARTY AS INDICATING A FINAL DESIGN OR TO BE INTENDED FOR BIDDING OR CONSTRUCTION PURPOSES. THIS PROGRESS DRAWING IS PROVIDED SOLELY FOR INFORMATION WITHOUT REPRESENTATION OR WARRANTY OF ANY KIND. THIS PROGRESS DRAWING HAS NOT BEEN SUBJECT TO A FORMAL QUALITY CONTROL CHECKING PROCESS.

REV.	DATE	REVISION DESCRIPTION	SHEET NO.
-	-	-	-
-	-	-	-
-	-	-	-
-	-	-	-
-	-	-	-
-	-	-	-
-	-	-	-

THE INFORMATION, INCLUDING ESTIMATED QUANTITIES OF WORK, SHOWN ON THESE SHEETS IS BASED ON LIMITED INVESTIGATIONS BY THE STATE AND IS IN NO WAY WARRANTED TO INDICATE THE CONDITIONS OF ACTUAL QUANTITIES OF WORK WHICH WILL BE REQUIRED.

Plotted Date: $DATE$

DESIGNER/DRAFTER: **JK**

CHECKED BY: **RD**

SCALE AS NOTED

STATE OF CONNECTICUT
DEPARTMENT OF TRANSPORTATION

Filename: $FILEA$

SIGNATURE/ BLOCK:

STV INC.
225 PARK AVENUE SOUTH
NEW YORK, NY 1003

PROJECT TITLE:

STAMFORD PARKING GARAGE

TOWN: **STAMFORD**

DRAWING TITLE: **PEDESTRIAN BRIDGE PLAN**

PROJECT NO. **301-0047**

DRAWING NO. **A-106**

SHEET NO.

Border Version: 11/14/08

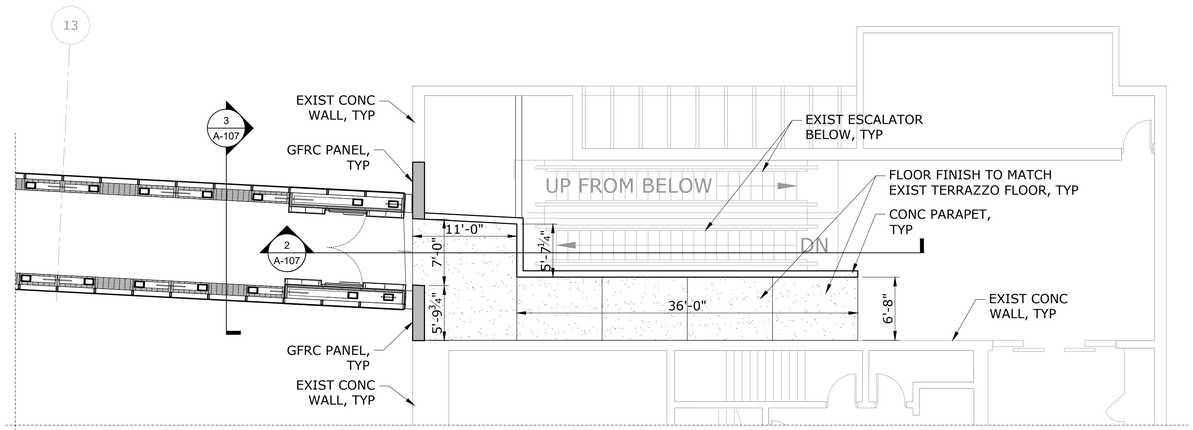

1 A-107 EXISTING STATION RENOVATION PLAN
1/8"=1'-0" 0 4' 8' 16'

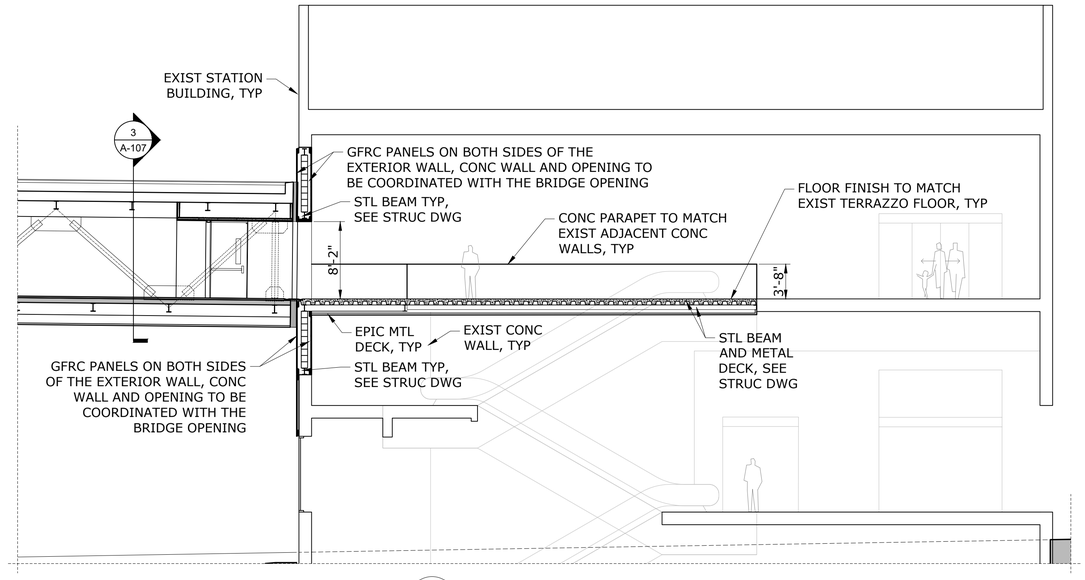

2 A-107 EXISTING STATION RENOVATION PLAN
1/8"=1'-0" 0 4' 8' 16'

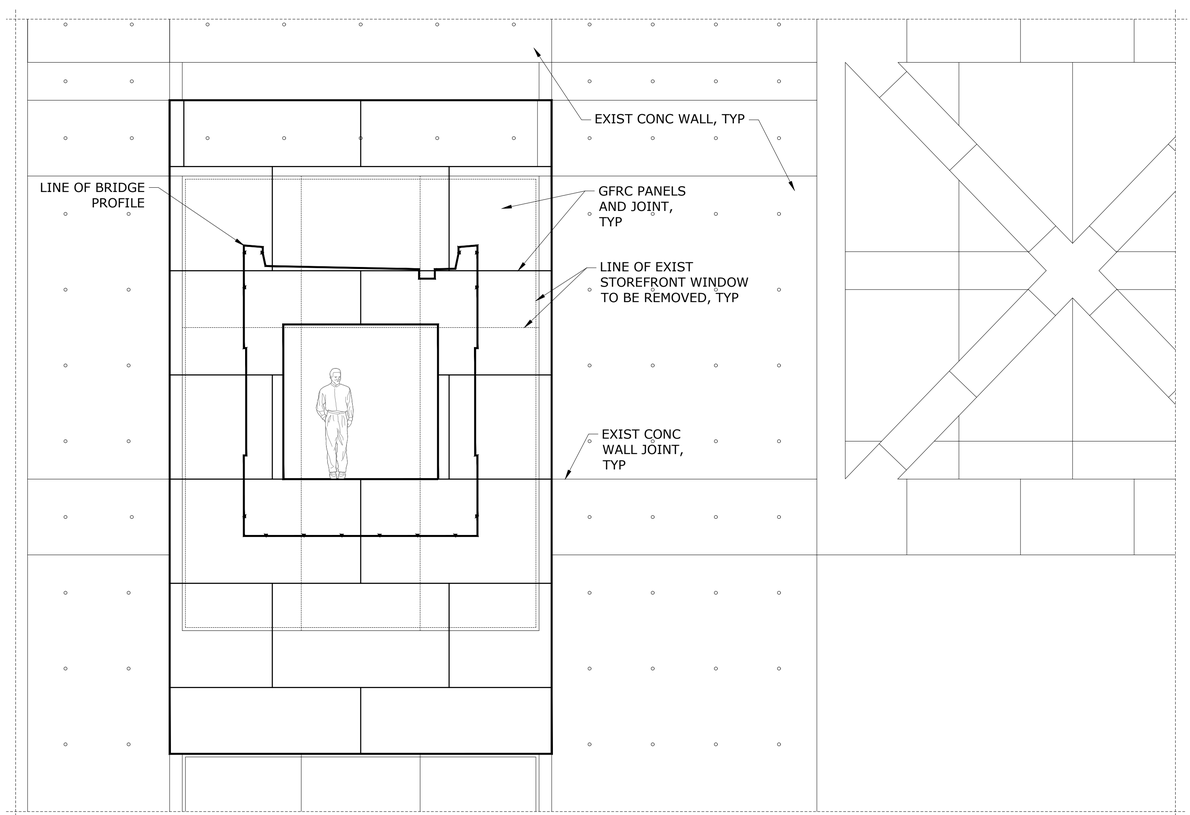

3 A-107 EXISTING STATION RENOVATION PLAN
1/4"=1'-0" 0 2' 4' 8'

DRAFT - NOT FOR BID OR CONSTRUCTION

BASE TECHNICAL CONCEPT PLANS

THIS IS A PROGRESS DRAWING AND IS NOT INTENDED TO BE RELIED UPON BY ANY PARTY AS INDICATING A FINAL DESIGN OR TO BE INTENDED FOR BIDDING OR CONSTRUCTION PURPOSES. THIS PROGRESS DRAWING IS PROVIDED SOLELY FOR INFORMATION WITHOUT REPRESENTATION OR WARRANTY OF ANY KIND. THIS PROGRESS DRAWING HAS NOT BEEN SUBJECT TO A FORMAL QUALITY CONTROL CHECKING PROCESS.

REV.	DATE	REVISION DESCRIPTION	SHEET NO.
-	-	-	-
-	-	-	-
-	-	-	-
-	-	-	-
-	-	-	-
-	-	-	-
-	-	-	-

THE INFORMATION, INCLUDING ESTIMATED QUANTITIES OF WORK, SHOWN ON THESE SHEETS IS BASED ON LIMITED INVESTIGATIONS BY THE STATE AND IS IN NO WAY WARRANTED TO INDICATE THE CONDITIONS OF ACTUAL QUANTITIES OF WORK WHICH WILL BE REQUIRED.

Plotted Date: $DATE$

DESIGNER/DRAFTER: **JK**
CHECKED BY: **RD**
SCALE AS NOTED

STATE OF CONNECTICUT
DEPARTMENT OF TRANSPORTATION

Filename: $FILEA$

SIGNATURE/ BLOCK:

STV INC.
225 PARK AVENUE SOUTH
NEW YORK, NY 1003

PROJECT TITLE:
STAMFORD
PARKING GARAGE

TOWN: **STAMFORD**

DRAWING TITLE: **EXISTING STATION RENOVATION PLAN**

PROJECT NO. **301-0047**
DRAWING NO. **A-107**
SHEET NO.

Border Version: 11/14/08

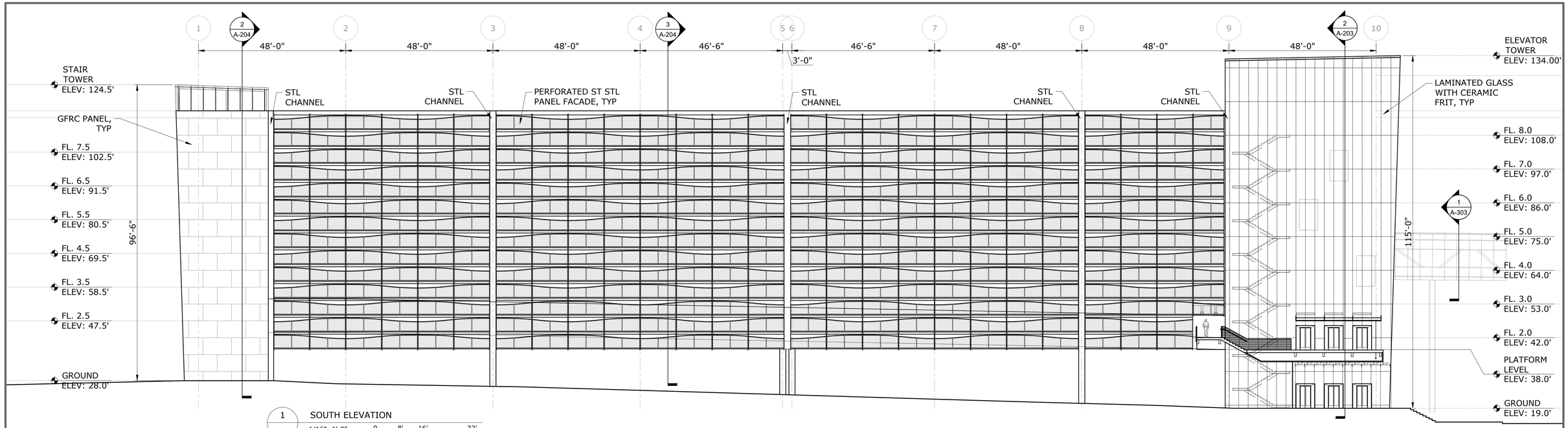

1 SOUTH ELEVATION
1/16"=1'-0" 0 8' 16' 32'

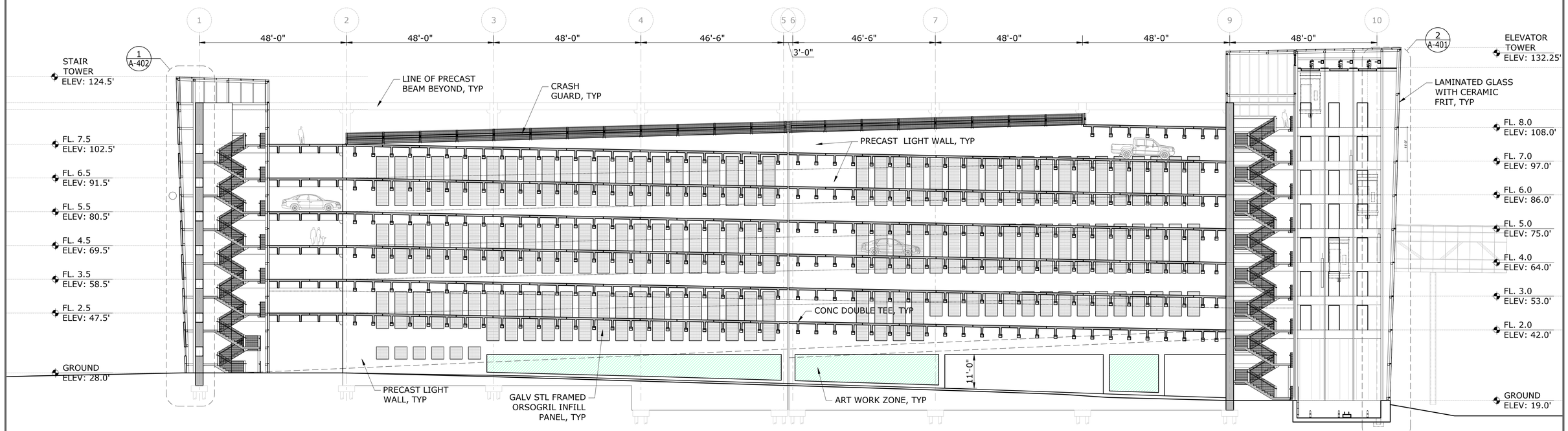

GENERAL NOTES

1. STEEL CHANNEL INFORMATION. SEE DWG A-502
2. MODULAR METAL PANEL FACADE, SEE DWG A-501
3. CRASH GUARD INFORMATION, SEE DWG S-302

2 LONGITUDINAL SECTION
1/16"=1'-0" 0 8' 16' 32'

DRAFT - NOT FOR BID OR CONSTRUCTION

BASE TECHNICAL CONCEPT PLANS

THIS IS A PROGRESS DRAWING AND IS NOT INTENDED TO BE RELIED UPON BY ANY PARTY AS INDICATING A FINAL DESIGN OR TO BE INTENDED FOR BIDDING OR CONSTRUCTION PURPOSES. THIS PROGRESS DRAWING IS PROVIDED SOLELY FOR INFORMATION WITHOUT REPRESENTATION OR WARRANTY OF ANY KIND. THIS PROGRESS DRAWING HAS NOT BEEN SUBJECT TO A FORMAL QUALITY CONTROL CHECKING PROCESS.

REV.	DATE	REVISION DESCRIPTION	SHEET NO.
-	-	-	-
-	-	-	-
-	-	-	-
-	-	-	-
-	-	-	-
-	-	-	-
-	-	-	-

THE INFORMATION, INCLUDING ESTIMATED QUANTITIES OF WORK, SHOWN ON THESE SHEETS IS BASED ON LIMITED INVESTIGATIONS BY THE STATE AND IS IN NO WAY WARRANTED TO INDICATE THE CONDITIONS OF ACTUAL QUANTITIES OF WORK WHICH WILL BE REQUIRED.

Plotted Date: $DATE$

DESIGNER/DRAFTER: JK
CHECKED BY: RD
SCALE AS NOTED

STATE OF CONNECTICUT
DEPARTMENT OF TRANSPORTATION

Filename: $FILEA$

SIGNATURE/ BLOCK:

STV INC.
225 PARK AVENUE SOUTH
NEW YORK, NY 1003

PROJECT TITLE:
STAMFORD
PARKING GARAGE

TOWN: STAMFORD

DRAWING TITLE:
SOUTH ELEVATION AND LONGITUDINAL SECTION

PROJECT NO. 301-0047
DRAWING NO. A-201
SHEET NO.

Border Version: 11/14/08

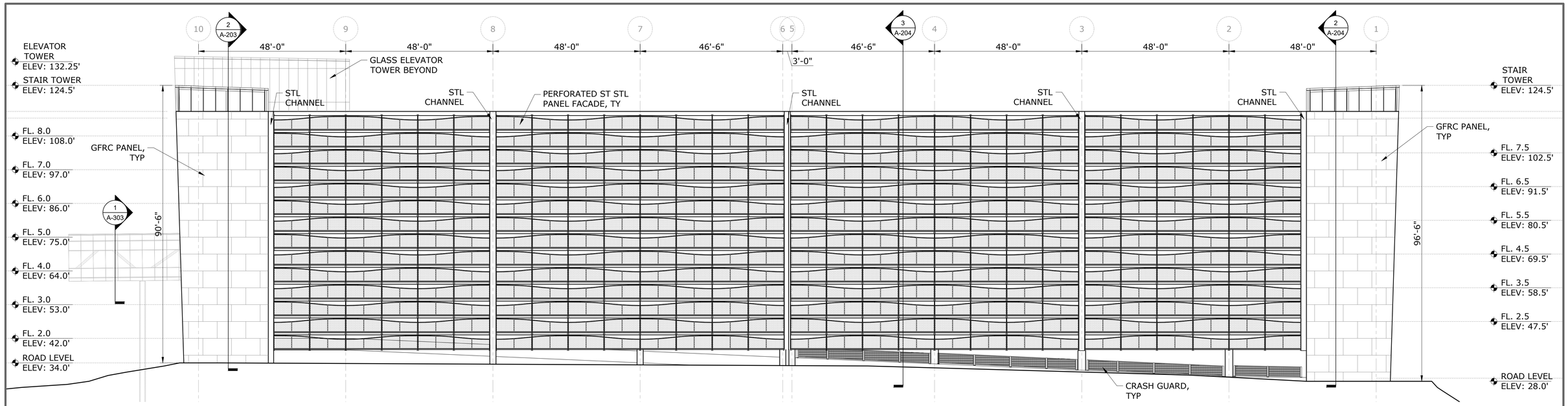

1 NORTH ELEVATION
1/16"=1'-0" 0 8' 16' 32'

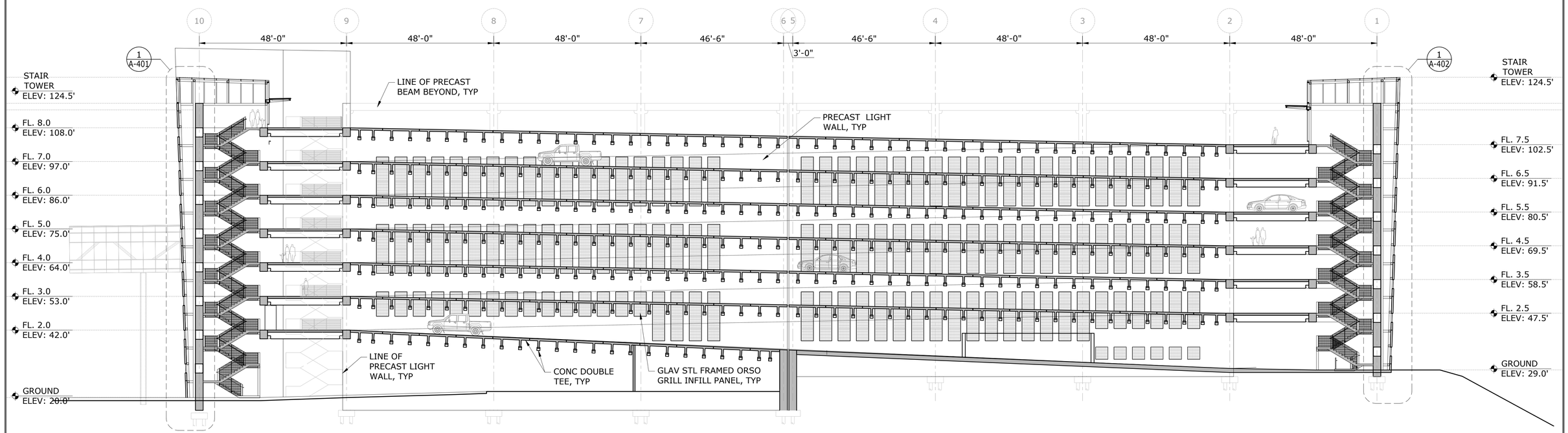

GENERAL NOTES

1. STEEL CHANNEL INFORMATION. SEE DWG A-502
2. MODULAR METAL PANEL FACADE, SEE DWG A-501
3. CRASH GUARD INFORMATION, SEE DWG S-302

2 LONGITUDINAL SECTION
1/16"=1'-0" 0 8' 16' 32'

DRAFT - NOT FOR BID OR CONSTRUCTION

BASE TECHNICAL CONCEPT PLANS

THIS IS A PROGRESS DRAWING AND IS NOT INTENDED TO BE RELIED UPON BY ANY PARTY AS INDICATING A FINAL DESIGN OR TO BE INTENDED FOR BIDDING OR CONSTRUCTION PURPOSES. THIS PROGRESS DRAWING IS PROVIDED SOLELY FOR INFORMATION WITHOUT REPRESENTATION OR WARRANTY OF ANY KIND. THIS PROGRESS DRAWING HAS NOT BEEN SUBJECT TO A FORMAL QUALITY CONTROL CHECKING PROCESS.

REV.	DATE	REVISION DESCRIPTION	SHEET NO.
-	-	-	-
-	-	-	-
-	-	-	-
-	-	-	-
-	-	-	-
-	-	-	-
-	-	-	-

THE INFORMATION, INCLUDING ESTIMATED QUANTITIES OF WORK, SHOWN ON THESE SHEETS IS BASED ON LIMITED INVESTIGATIONS BY THE STATE AND IS IN NO WAY WARRANTED TO INDICATE THE CONDITIONS OF ACTUAL QUANTITIES OF WORK WHICH WILL BE REQUIRED.

Plotted Date: $DATE$

DESIGNER/DRAFTER: **JK**
CHECKED BY: **RD**
SCALE AS NOTED

STATE OF CONNECTICUT
DEPARTMENT OF TRANSPORTATION

Filename: $FILEA$

SIGNATURE/ BLOCK:
STV INC.
225 PARK AVENUE SOUTH
NEW YORK, NY 1003

PROJECT TITLE:
STAMFORD PARKING GARAGE

TOWN: **STAMFORD**

DRAWING TITLE: **NORTH ELEVATION AND LONGITUDINAL SECTION**

PROJECT NO. **301-0047**
DRAWING NO. **A-202**
SHEET NO.

Border Version: 11/14/08

GENERAL NOTES

1. STEEL CHANNEL INFORMATION. SEE DWG A-502
2. MODULAR METAL PANEL FACADE, SEE DWG A-501
3. CRASH GUARD INFORMATION, SEE DWG S-302
4. BRIDGE INFORMATION, SEE DWG A-106, A-107, A-303

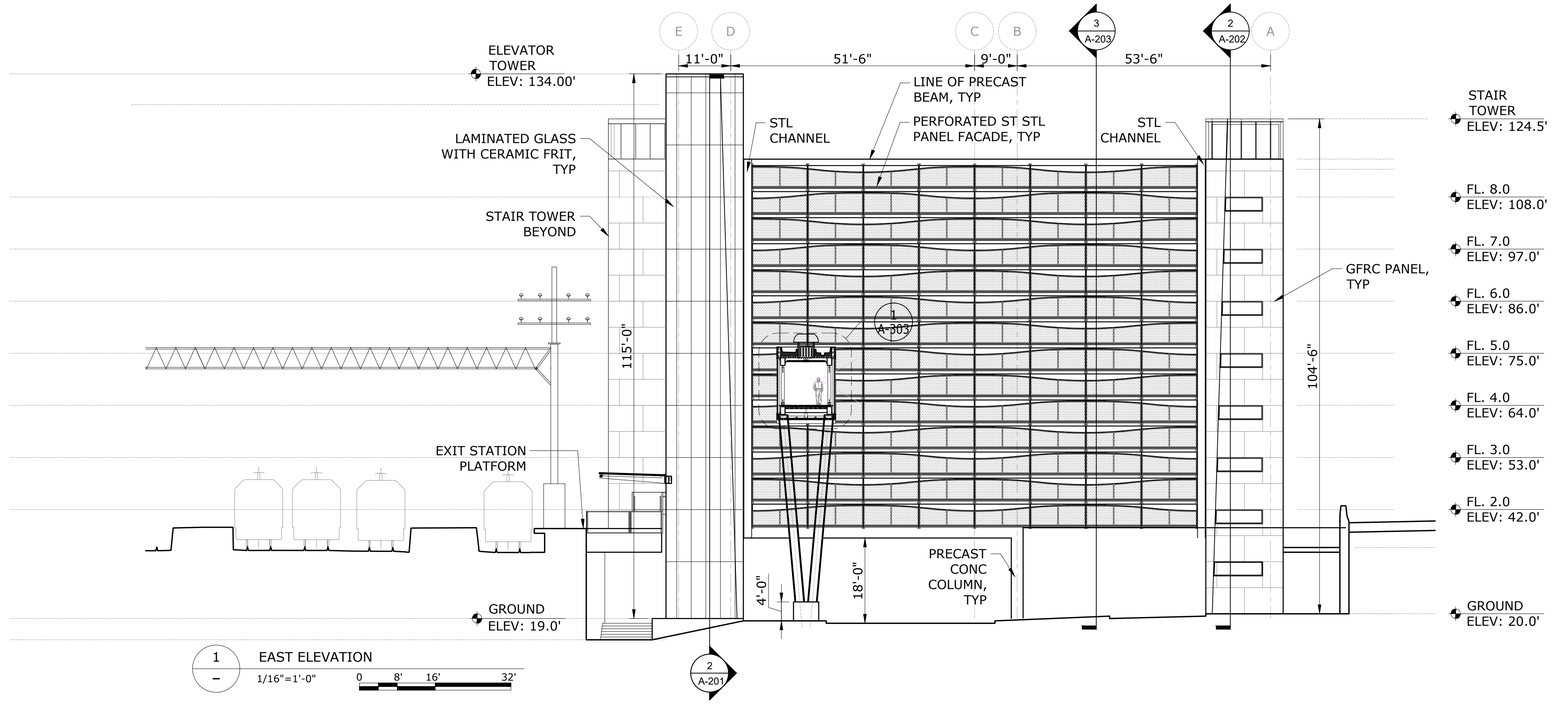

1 EAST ELEVATION
1/16"=1'-0" 0 8' 16' 32'

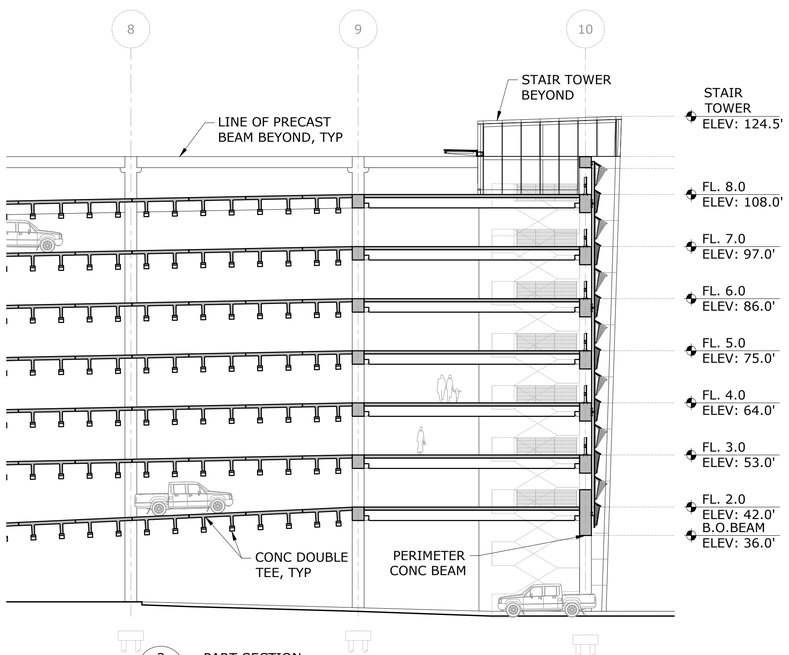

3 A-203 PART SECTION
1/16"=1'-0" 0 8' 16' 32'

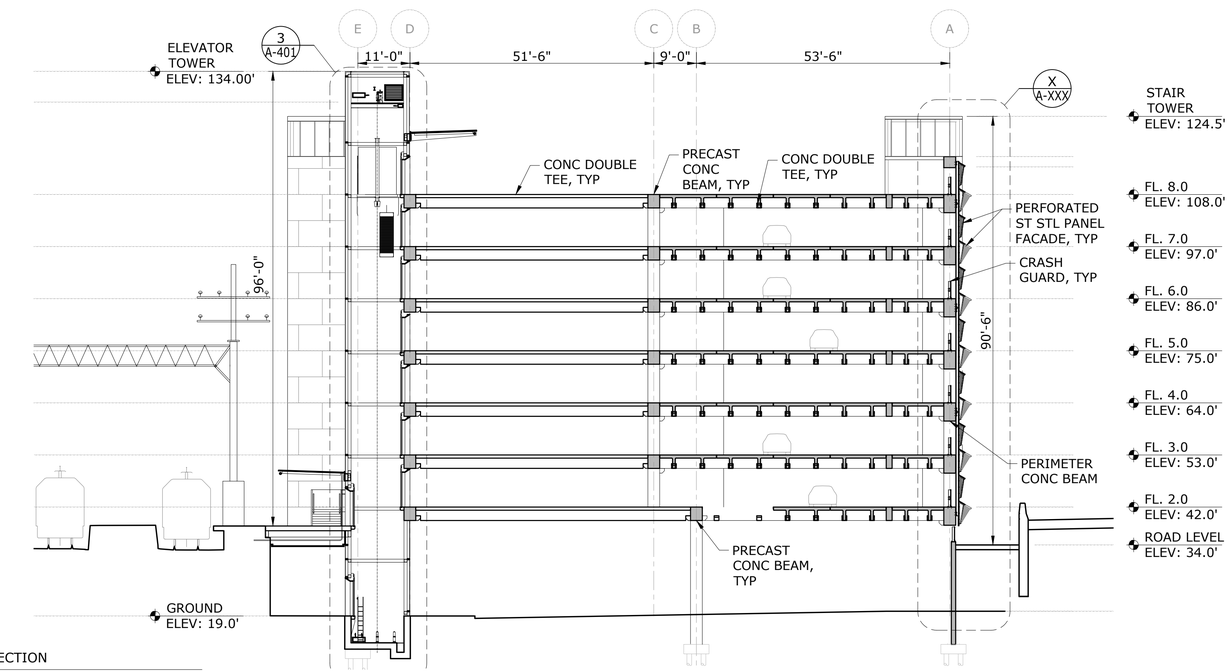

2 CROSS SECTION
1/16"=1'-0" 0 8' 16' 32'

DRAFT - NOT FOR BID OR CONSTRUCTION

BASE TECHNICAL CONCEPT PLANS

THIS IS A PROGRESS DRAWING AND IS NOT INTENDED TO BE RELIED UPON BY ANY PARTY AS INDICATING A FINAL DESIGN OR TO BE INTENDED FOR BIDDING OR CONSTRUCTION PURPOSES. THIS PROGRESS DRAWING IS PROVIDED SOLELY FOR INFORMATION WITHOUT REPRESENTATION OR WARRANTY OF ANY KIND. THIS PROGRESS DRAWING HAS NOT BEEN SUBJECT TO A FORMAL QUALITY CONTROL CHECKING PROCESS.

REV.	DATE	REVISION DESCRIPTION	SHEET NO.
-	-	-	-
-	-	-	-
-	-	-	-
-	-	-	-
-	-	-	-
-	-	-	-
-	-	-	-

THE INFORMATION, INCLUDING ESTIMATED QUANTITIES OF WORK, SHOWN ON THESE SHEETS IS BASED ON LIMITED INVESTIGATIONS BY THE STATE AND IS IN NO WAY WARRANTED TO INDICATE THE CONDITIONS OF ACTUAL QUANTITIES OF WORK WHICH WILL BE REQUIRED.

Plotted Date: $DATE$

DESIGNER/DRAFTER: **JK**

CHECKED BY: **RD**

SCALE AS NOTED

STATE OF CONNECTICUT
DEPARTMENT OF TRANSPORTATION

Filename: $FILEA$

SIGNATURE/ BLOCK:

STV INC.
225 PARK AVENUE SOUTH
NEW YORK, NY 1003

PROJECT TITLE:

STAMFORD PARKING GARAGE

TOWN: **STAMFORD**

DRAWING TITLE: **EAST ELEVATION AND CROSS SECTION**

PROJECT NO. **301-0047**

DRAWING NO. **A-203**

SHEET NO.

Border Version: 11/14/08

GENERAL NOTES

1. STEEL CHANNEL INFORMATION. SEE DWG A-502
2. MODULAR METAL PANEL FACADE, SEE DWG A-501
3. CRASH GUARD INFORMATION, SEE DWG S-302
4. BRIDGE INFORMATION, SEE DWG A-106, A-107, A-303

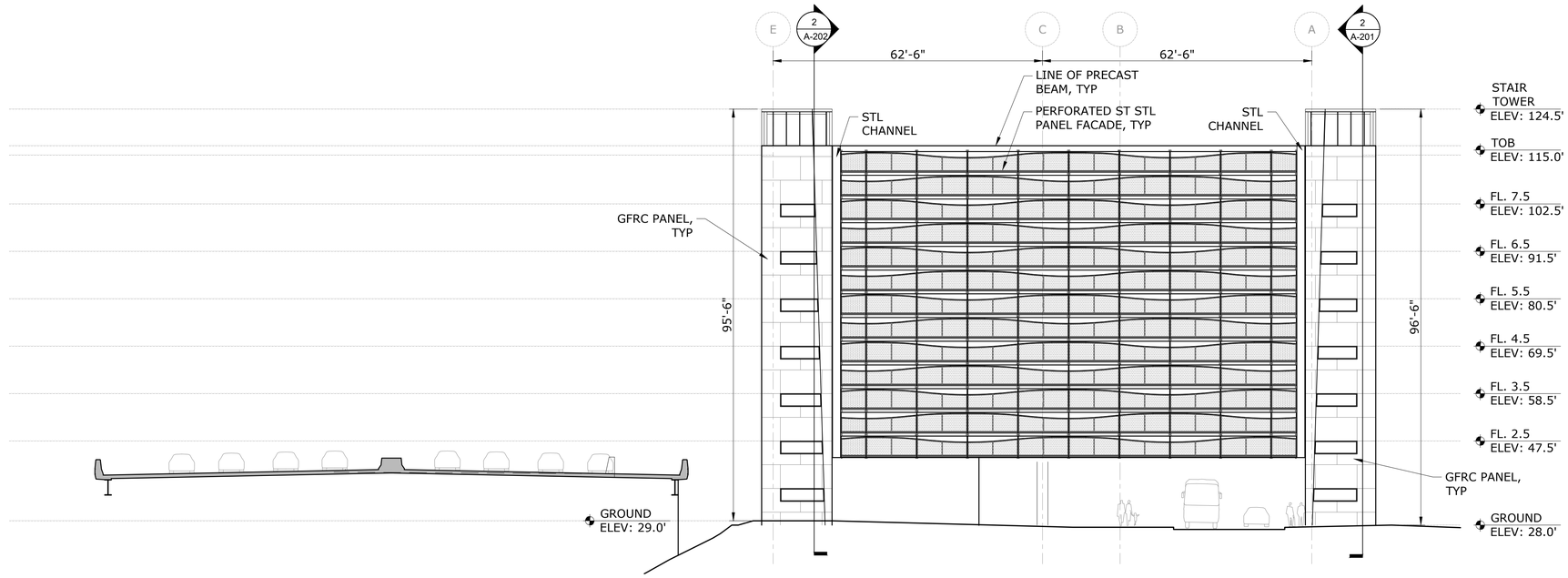

1 – WEST ELEVATION
1/16"=1'-0" 0 8' 16' 32'

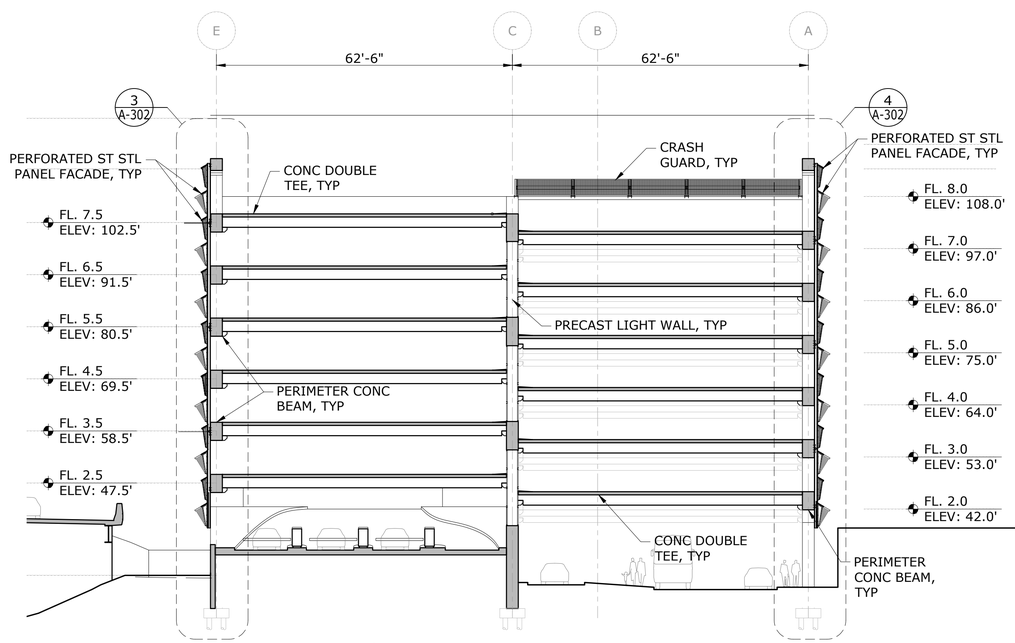

3 – CROSS SECTION
1/16"=1'-0" 0 8' 16' 32'

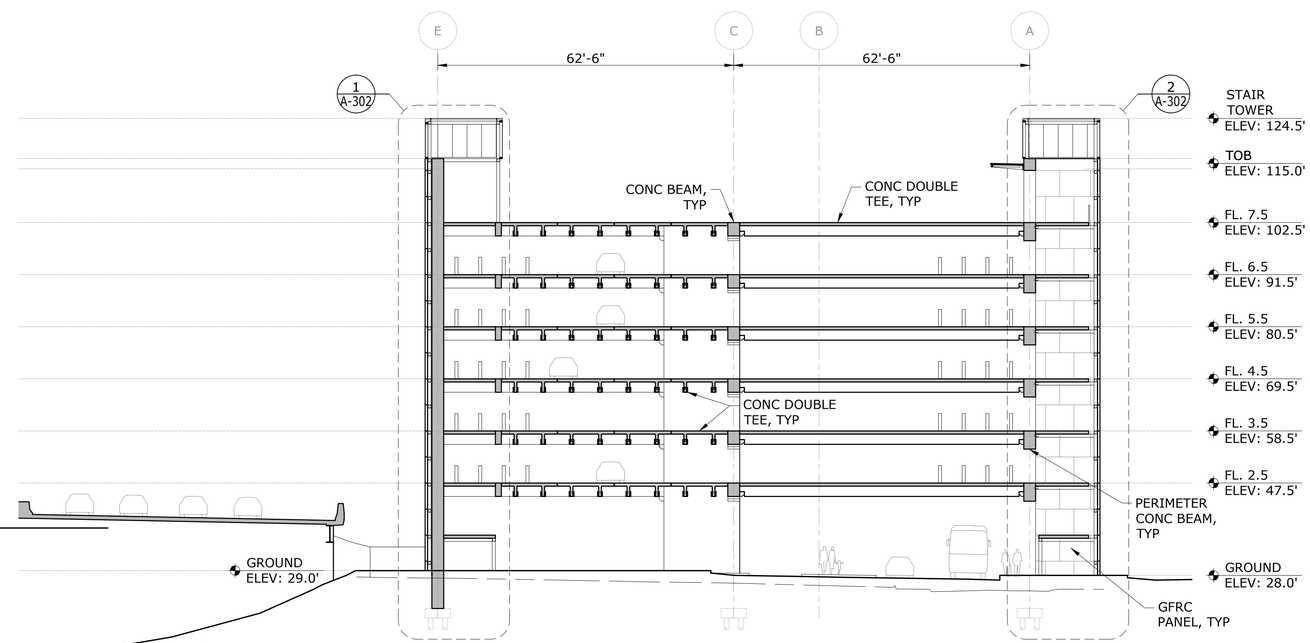

2 – CROSS SECTION
1/16"=1'-0" 0 8' 16' 32'

DRAFT - NOT FOR BID OR CONSTRUCTION

BASE TECHNICAL CONCEPT PLANS

THIS IS A PROGRESS DRAWING AND IS NOT INTENDED TO BE RELIED UPON BY ANY PARTY AS INDICATING A FINAL DESIGN OR TO BE INTENDED FOR BIDDING OR CONSTRUCTION PURPOSES. THIS PROGRESS DRAWING IS PROVIDED SOLELY FOR INFORMATION WITHOUT REPRESENTATION OR WARRANTY OF ANY KIND. THIS PROGRESS DRAWING HAS NOT BEEN SUBJECT TO A FORMAL QUALITY CONTROL CHECKING PROCESS.

REV.	DATE	REVISION DESCRIPTION	SHEET NO.
-	-	-	-
-	-	-	-
-	-	-	-
-	-	-	-
-	-	-	-
-	-	-	-
-	-	-	-

THE INFORMATION, INCLUDING ESTIMATED QUANTITIES OF WORK, SHOWN ON THESE SHEETS IS BASED ON LIMITED INVESTIGATIONS BY THE STATE AND IS IN NO WAY WARRANTED TO INDICATE THE CONDITIONS OF ACTUAL QUANTITIES OF WORK WHICH WILL BE REQUIRED.

Plotted Date: $DATE$

DESIGNER/DRAFTER: **JK**

CHECKED BY: **RD**

SCALE AS NOTED

STATE OF CONNECTICUT
DEPARTMENT OF TRANSPORTATION

Filename: $FILEA$

SIGNATURE/ BLOCK:

STV INC.
225 PARK AVENUE SOUTH
NEW YORK, NY 1003

PROJECT TITLE:

STAMFORD PARKING GARAGE

TOWN: **STAMFORD**

DRAWING TITLE: **WEST ELEVATION AND CROSS SECTION**

PROJECT NO. **301-0047**

DRAWING NO. **A-204**

SHEET NO.

Border Version: 11/14/08

GENERAL NOTES

1. ALL GLASS TO BE STRUCTURAL LAMINATED GLASS GLUED TO ALUM MULLIONS WITH CERAMIC FRIT. UNO.
2. ALL STRUCTURAL MEMBERS TO BE GALVANIZED STEEL. UNO.

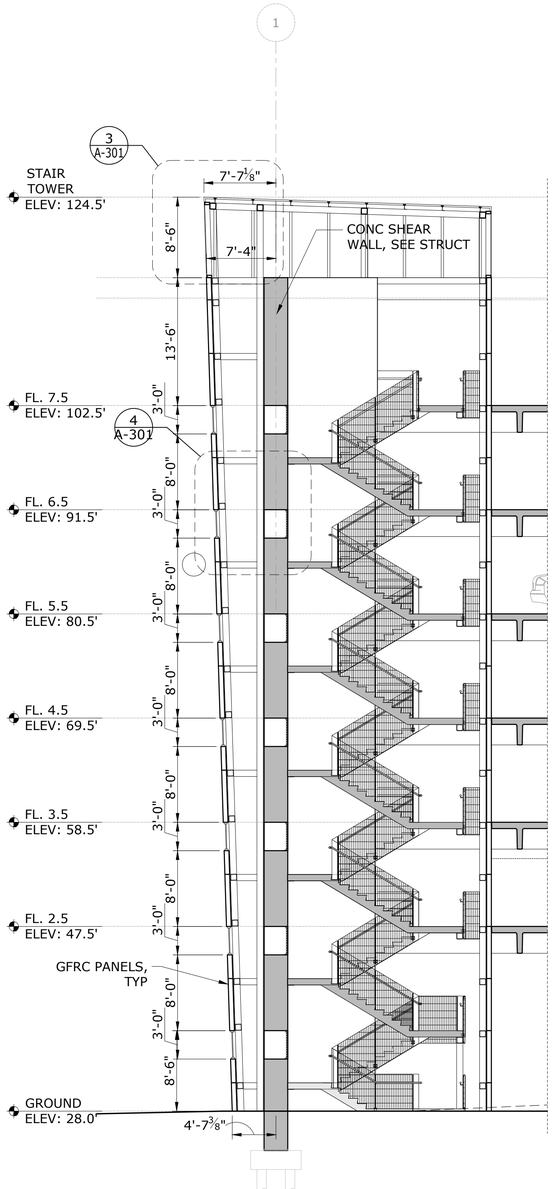

1 STAIR 4 TOWER WALL SECTION
1/8"=1'-0" 0 4' 8' 16'

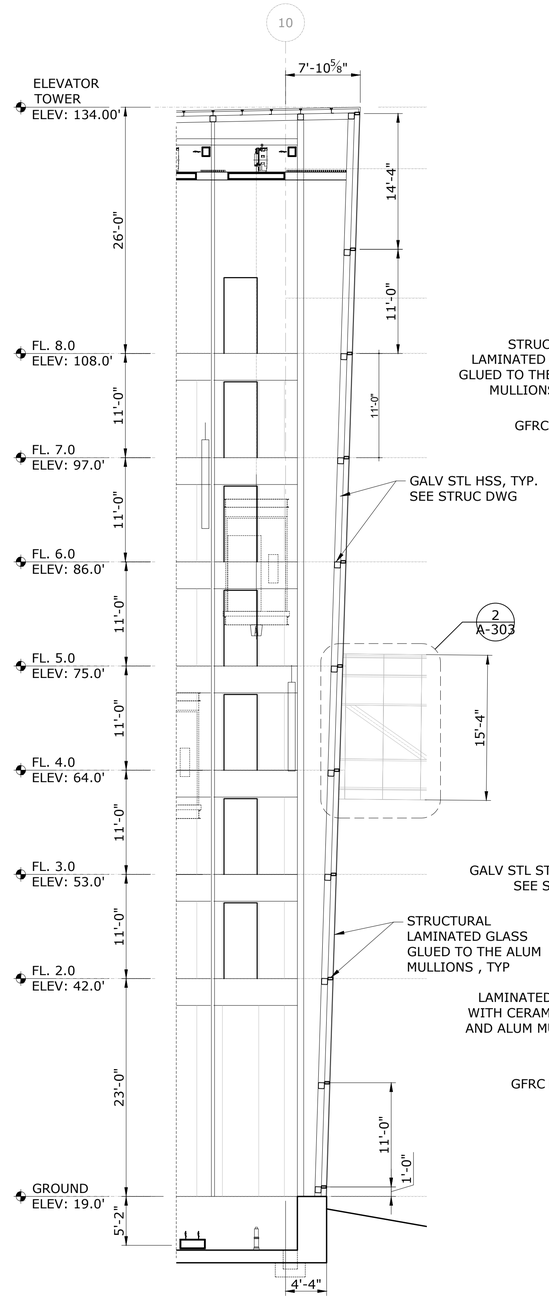

2 STAIR 2 TOWER WALL SECTION
1/8"=1'-0" 0 4' 8' 16'

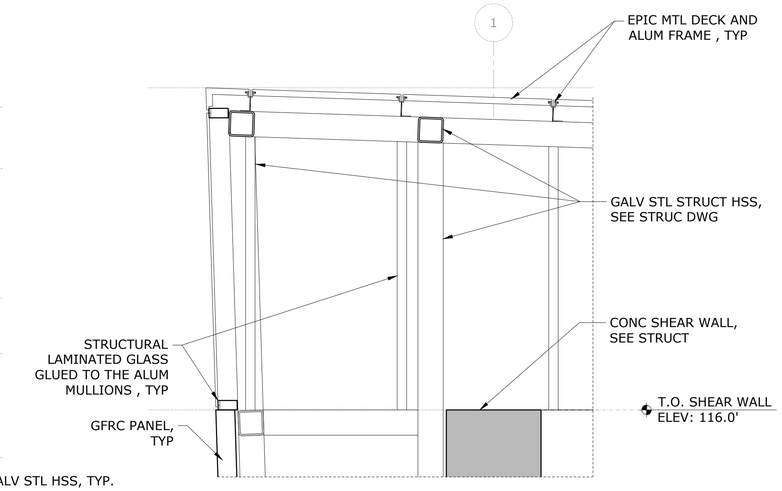

3 STAIR 2 TOWER WALL SECTION
1/2"=1'-0" 0 1' 2' 4'

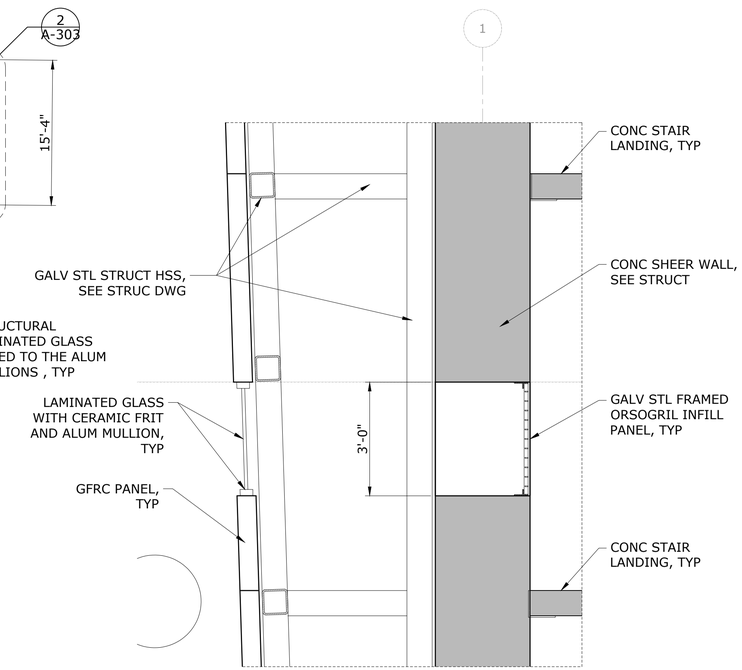

4 STAIR 2 TOWER WALL SECTION
1/2"=1'-0" 0 1' 2' 4'

DRAFT - NOT FOR BID OR CONSTRUCTION

BASE TECHNICAL CONCEPT PLANS

THIS IS A PROGRESS DRAWING AND IS NOT INTENDED TO BE RELIED UPON BY ANY PARTY AS INDICATING A FINAL DESIGN OR TO BE INTENDED FOR BIDDING OR CONSTRUCTION PURPOSES. THIS PROGRESS DRAWING IS PROVIDED SOLELY FOR INFORMATION WITHOUT REPRESENTATION OR WARRANTY OF ANY KIND. THIS PROGRESS DRAWING HAS NOT BEEN SUBJECT TO A FORMAL QUALITY CONTROL CHECKING PROCESS.

REV.	DATE	REVISION DESCRIPTION	SHEET NO.
-	-	-	-
-	-	-	-
-	-	-	-
-	-	-	-
-	-	-	-
-	-	-	-
-	-	-	-

THE INFORMATION, INCLUDING ESTIMATED QUANTITIES OF WORK, SHOWN ON THESE SHEETS IS BASED ON LIMITED INVESTIGATIONS BY THE STATE AND IS IN NO WAY WARRANTED TO INDICATE THE CONDITIONS OF ACTUAL QUANTITIES OF WORK WHICH WILL BE REQUIRED.

Plotted Date: $DATE$

DESIGNER/DRAFTER: **JK**

CHECKED BY: **RD**

SCALE AS NOTED

STATE OF CONNECTICUT
DEPARTMENT OF TRANSPORTATION

Filename: $FILEA$

SIGNATURE/ BLOCK:

STV INC.
225 PARK AVENUE SOUTH
NEW YORK, NY 1003

PROJECT TITLE:

STAMFORD PARKING GARAGE

TOWN: **STAMFORD**

DRAWING TITLE: **WALL SECTIONS**

PROJECT NO. **301-0047**

DRAWING NO. **A-301**

SHEET NO.

Border Version: 11/14/08

GENERAL NOTES

1. ALL GLASS TO BE STRUCTURAL LAMINATED GLASS GLUED TO ALUM MULLIONS WITH CERAMIC FRIT. UNO.
2. ALL STRUCTURAL MEMBERS TO BE GALVANIZED STEEL. UNO.

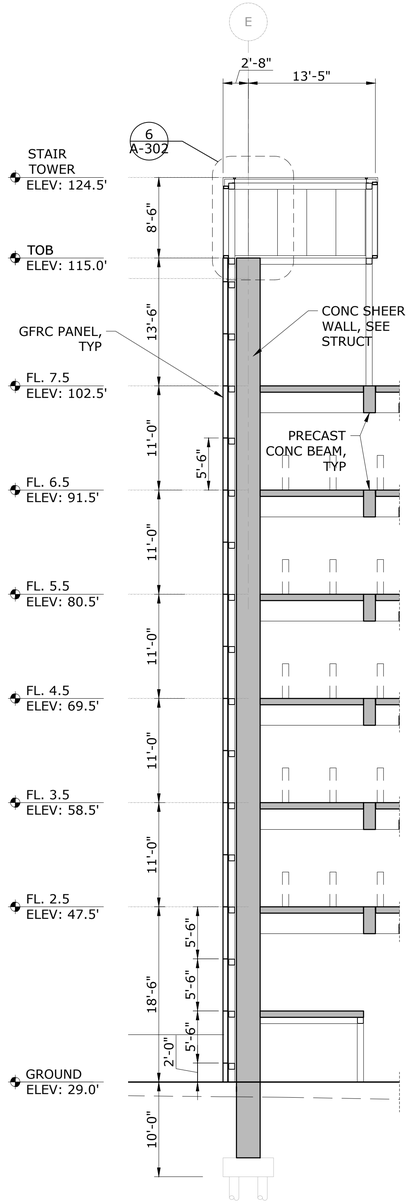

1 STAIR TOWER WALL SECTION
1/8"=1'-0"

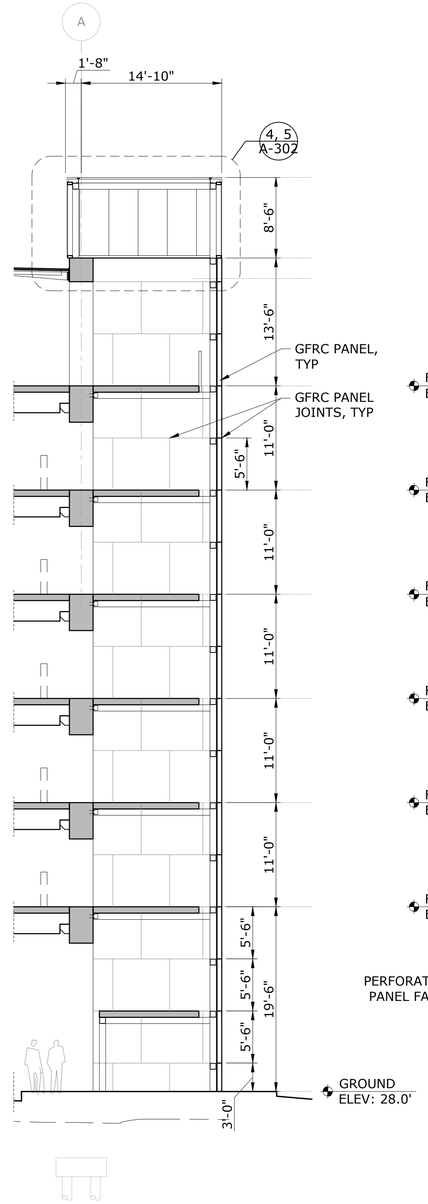

2 STAIR TOWER WALL SECTION
1/8"=1'-0"

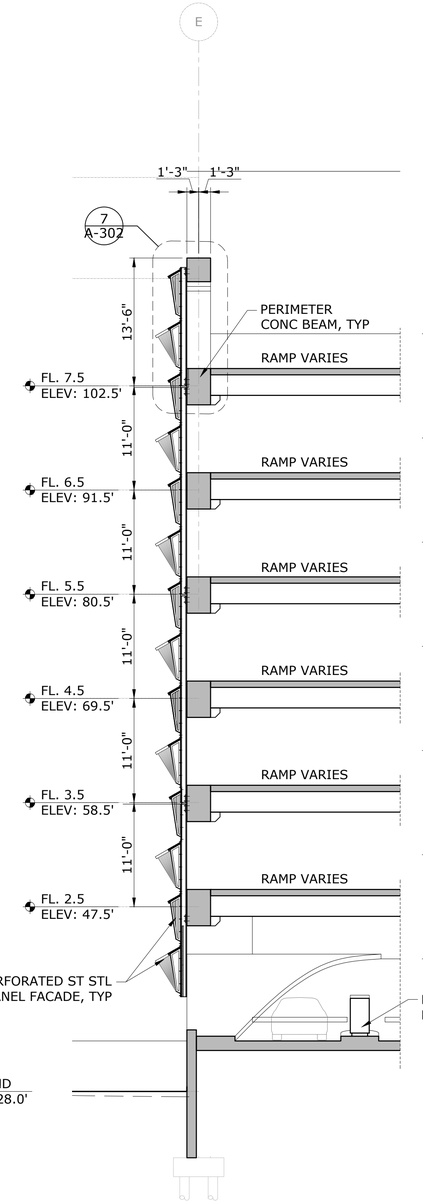

3 WALL SECTION
1/8"=1'-0"

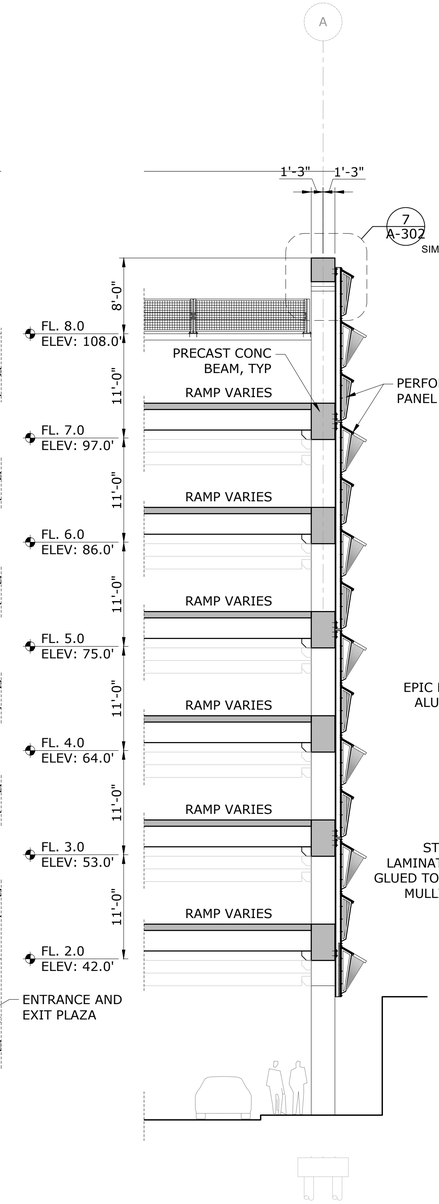

4 WALL SECTION
1/8"=1'-0"

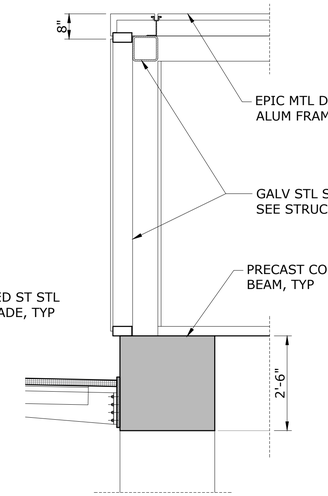

4 WALL SECTION
1/2"=1'-0"

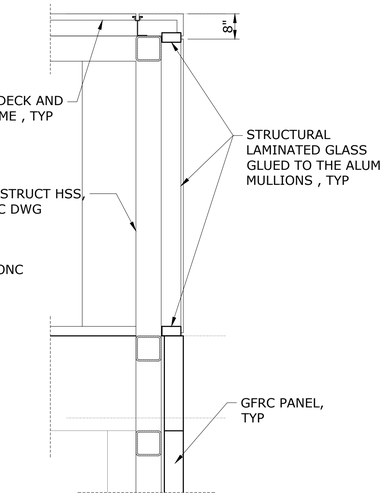

5 WALL SECTION
1/2"=1'-0"

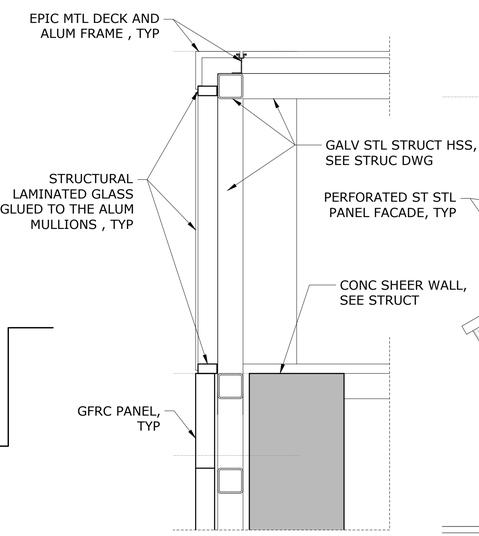

6 WALL SECTION
1/2"=1'-0"

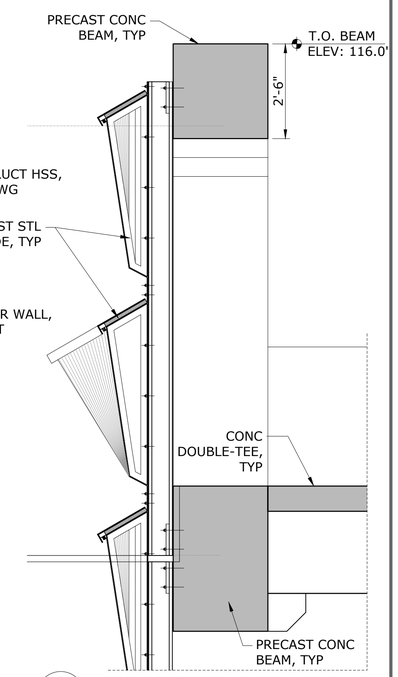

7 WALL SECTION
1/2"=1'-0"

DRAFT - NOT FOR BID OR CONSTRUCTION

BASE TECHNICAL CONCEPT PLANS

THIS IS A PROGRESS DRAWING AND IS NOT INTENDED TO BE RELIED UPON BY ANY PARTY AS INDICATING A FINAL DESIGN OR TO BE INTENDED FOR BIDDING OR CONSTRUCTION PURPOSES. THIS PROGRESS DRAWING IS PROVIDED SOLELY FOR INFORMATION WITHOUT REPRESENTATION OR WARRANTY OF ANY KIND. THIS PROGRESS DRAWING HAS NOT BEEN SUBJECT TO A FORMAL QUALITY CONTROL CHECKING PROCESS.

REV.	DATE	REVISION DESCRIPTION	SHEET NO.
-	-	-	-
-	-	-	-
-	-	-	-
-	-	-	-
-	-	-	-
-	-	-	-
-	-	-	-

THE INFORMATION, INCLUDING ESTIMATED QUANTITIES OF WORK, SHOWN ON THESE SHEETS IS BASED ON LIMITED INVESTIGATIONS BY THE STATE AND IS IN NO WAY WARRANTED TO INDICATE THE CONDITIONS OF ACTUAL QUANTITIES OF WORK WHICH WILL BE REQUIRED.

Plotted Date: $DATE$

DESIGNER/DRAFTER: **JK**

CHECKED BY: **RD**

SCALE AS NOTED

STATE OF CONNECTICUT
DEPARTMENT OF TRANSPORTATION

Filename: $FILEA$

SIGNATURE/ BLOCK:

STV INC.
225 PARK AVENUE SOUTH
NEW YORK, NY 1003

PROJECT TITLE:

STAMFORD
PARKING GARAGE

TOWN: **STAMFORD**

DRAWING TITLE: **WALL SECTIONS**

PROJECT NO. **301-0047**

DRAWING NO. **A-302**

SHEET NO.

Border Version: 11/14/08

GENERAL NOTES

1. ALL GLASS TO BE STRUCTURAL LAMINATED GLASS GLUED TO ALUM MULLIONS WITH CERAMIC FRIT. UNO.
2. ALL STRUCTURAL MEMBERS TO BE GALVANIZED STEEL. UNO.

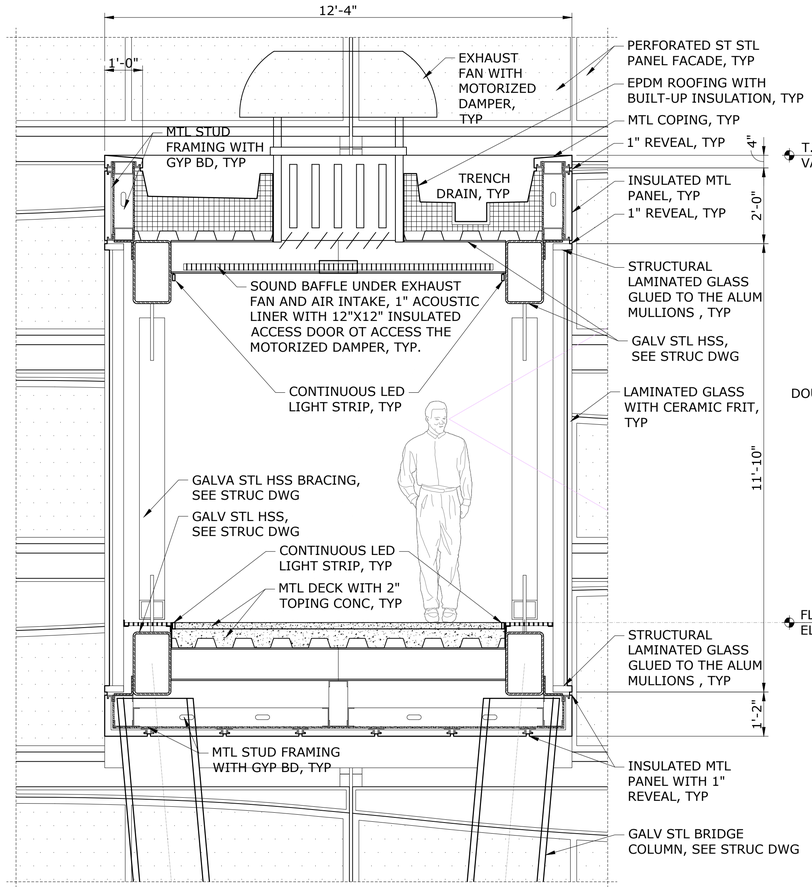

1 A-303 BRIDGE CROSS SECTION
1/2"=1'-0" 0 1' 2' 4'

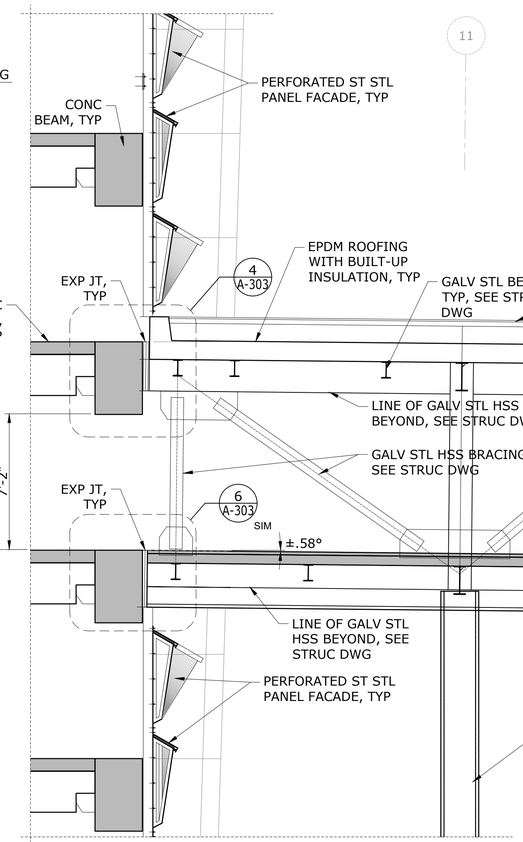

2 A-303 BRIDGE SECTION AT GRARAGE
1/4"=1'-0" 0 2' 4' 8'

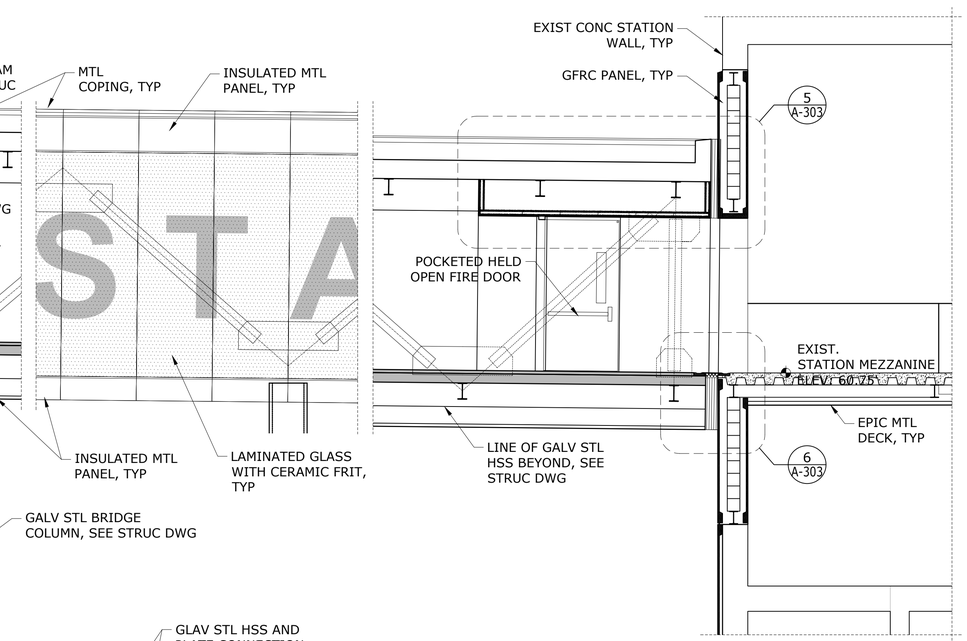

3 A-303 BRIDGE SECTION AT STATION MEZZANINE
1/4"=1'-0" 0 2' 4' 8'

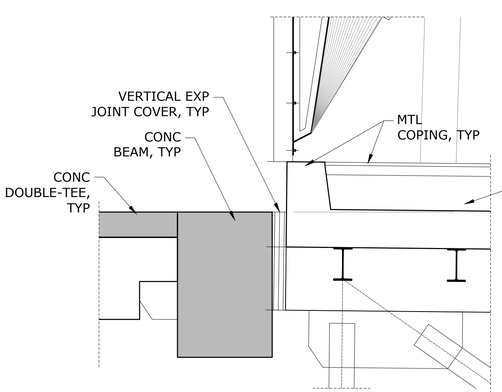

4 A-303 BRIDGE CROSS SECTION
1/2"=1'-0" 0 1' 2' 4'

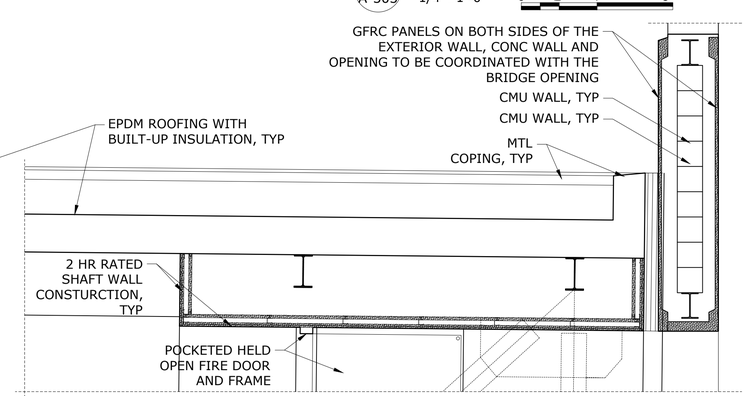

5 A-303 BRIDGE CROSS SECTION
1/2"=1'-0" 0 1' 2' 4'

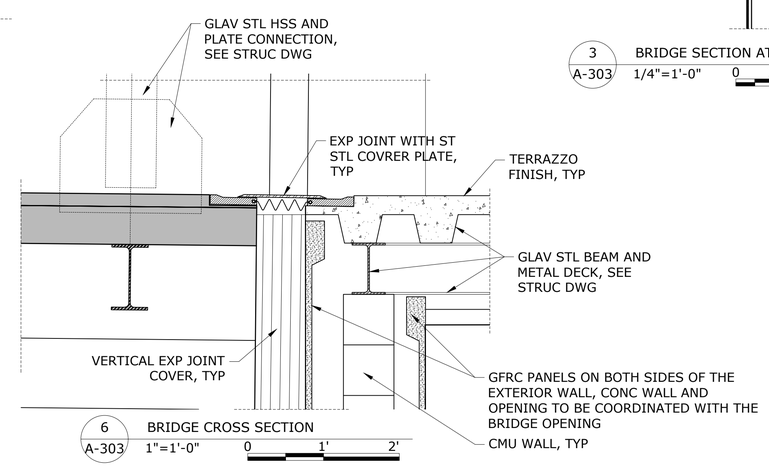

6 A-303 BRIDGE CROSS SECTION
1"=1'-0" 0 1' 2'

DRAFT - NOT FOR BID OR CONSTRUCTION

BASE TECHNICAL CONCEPT PLANS

THIS IS A PROGRESS DRAWING AND IS NOT INTENDED TO BE RELIED UPON BY ANY PARTY AS INDICATING A FINAL DESIGN OR TO BE INTENDED FOR BIDDING OR CONSTRUCTION PURPOSES. THIS PROGRESS DRAWING IS PROVIDED SOLELY FOR INFORMATION WITHOUT REPRESENTATION OR WARRANTY OF ANY KIND. THIS PROGRESS DRAWING HAS NOT BEEN SUBJECT TO A FORMAL QUALITY CONTROL CHECKING PROCESS.

REV.	DATE	REVISION DESCRIPTION	SHEET NO.
-	-	-	-
-	-	-	-
-	-	-	-
-	-	-	-
-	-	-	-
-	-	-	-
-	-	-	-

THE INFORMATION, INCLUDING ESTIMATED QUANTITIES OF WORK, SHOWN ON THESE SHEETS IS BASED ON LIMITED INVESTIGATIONS BY THE STATE AND IS IN NO WAY WARRANTED TO INDICATE THE CONDITIONS OF ACTUAL QUANTITIES OF WORK WHICH WILL BE REQUIRED.

Plotted Date: $DATE$

DESIGNER/DRAFTER: **JK**

CHECKED BY: **RD**

SCALE AS NOTED

STATE OF CONNECTICUT
DEPARTMENT OF TRANSPORTATION

Filename: $FILEA$

SIGNATURE/ BLOCK:

STV INC.
225 PARK AVENUE SOUTH
NEW YORK, NY 1003

PROJECT TITLE:

STAMFORD PARKING GARAGE

TOWN: **STAMFORD**

DRAWING TITLE: **BRIDGE SECTIONS**

PROJECT NO. **301-0047**

DRAWING NO. **A-303**

SHEET NO.

Border Version: 11/14/08

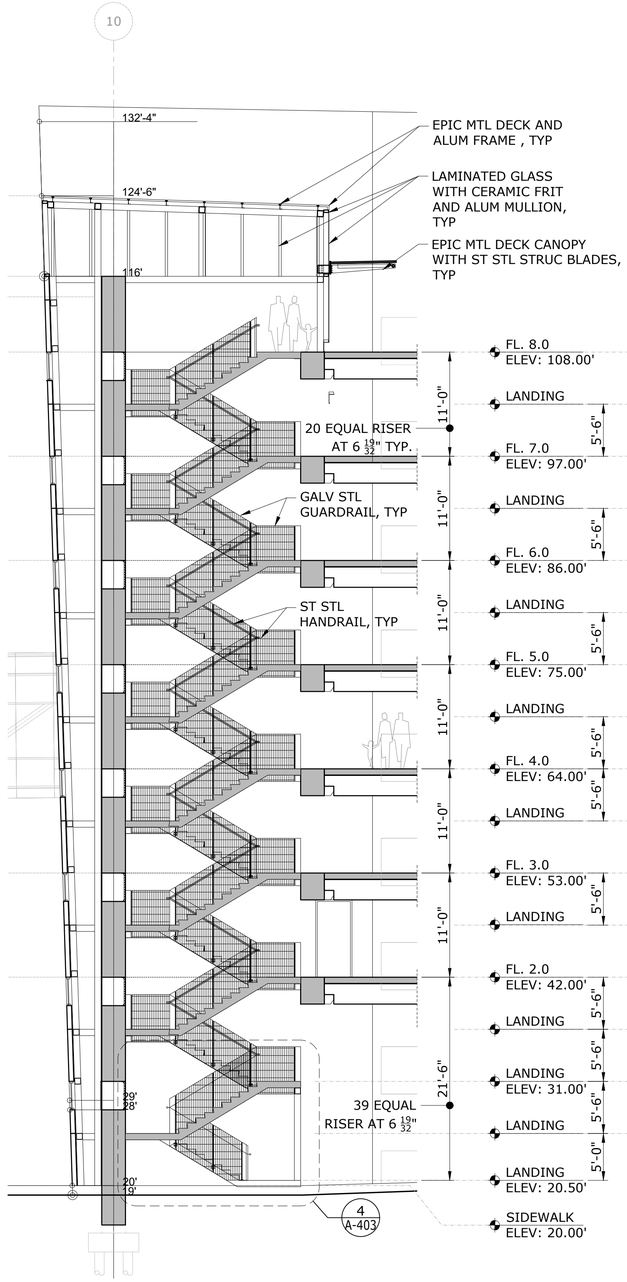

1 A-401 STAIR 1 SECTION
1/8"=1'-0" 0 4' 8' 16'

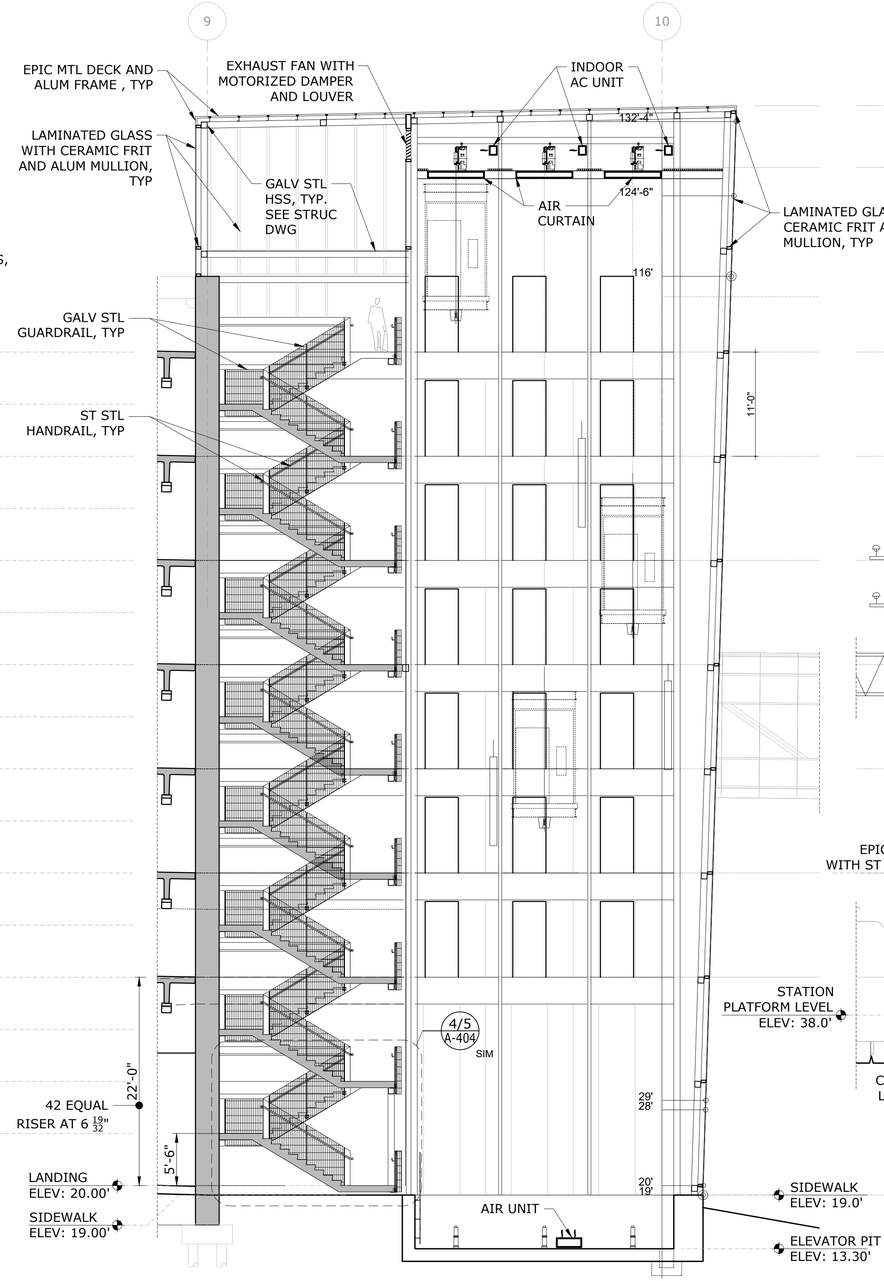

2 A-401 STAIR 2 SECTION AND ELEVATOR HOISTWAY SECTION
1/8"=1'-0" 0 4' 8' 16'

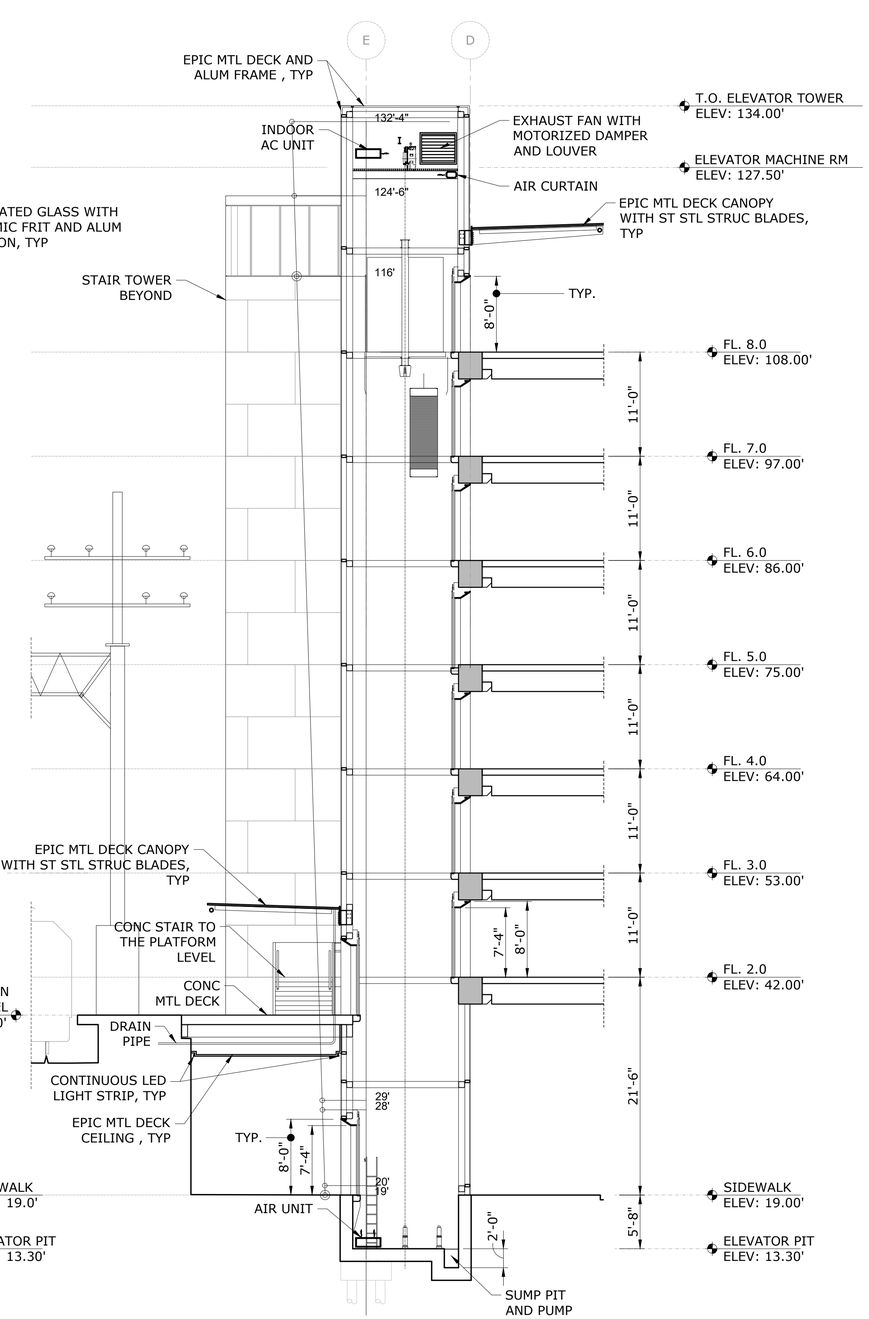

3 A-401 ELEVATOR HOISTWAY SECTION
1/8"=1'-0" 0 4' 8' 16'

GENERAL NOTES

1. ALL MTL INCLUDING STRUCTURAL MTL TO BE GALV STL, UNO
2. HAND RAILINGS TO BE ST STL
3. STAIR STRINGERS TO BE PRECAST CONCRETE
4. CRASH GUARD AND GUARD RAIL TO GALV STL
5. ORSOGRIL TO BE GALV STL
6. ALL GLASS TO BE STRUCTURAL LAMINATED GLASS GLUED TO ALUM MULLIONS WITH CERAMIC FRIT. UNO.

DRAFT - NOT FOR BID OR CONSTRUCTION

BASE TECHNICAL CONCEPT PLANS

THIS IS A PROGRESS DRAWING AND IS NOT INTENDED TO BE RELIED UPON BY ANY PARTY AS INDICATING A FINAL DESIGN OR TO BE INTENDED FOR BIDDING OR CONSTRUCTION PURPOSES. THIS PROGRESS DRAWING IS PROVIDED SOLELY FOR INFORMATION WITHOUT REPRESENTATION OR WARRANTY OF ANY KIND. THIS PROGRESS DRAWING HAS NOT BEEN SUBJECT TO A FORMAL QUALITY CONTROL CHECKING PROCESS.

REV.	DATE	REVISION DESCRIPTION	SHEET NO.
-	-	-	-
-	-	-	-
-	-	-	-
-	-	-	-
-	-	-	-
-	-	-	-
-	-	-	-

THE INFORMATION, INCLUDING ESTIMATED QUANTITIES OF WORK, SHOWN ON THESE SHEETS IS BASED ON LIMITED INVESTIGATIONS BY THE STATE AND IS IN NO WAY WARRANTED TO INDICATE THE CONDITIONS OF ACTUAL QUANTITIES OF WORK WHICH WILL BE REQUIRED.

Plotted Date: $DATE$

DESIGNER/DRAFTER: **JK**
CHECKED BY: **RD**
SCALE AS NOTED

STATE OF CONNECTICUT
DEPARTMENT OF TRANSPORTATION

Filename: $FILEA$

SIGNATURE/ BLOCK:
STV INC.
225 PARK AVENUE SOUTH
NEW YORK, NY 1003

PROJECT TITLE:
STAMFORD PARKING GARAGE

TOWN: **STAMFORD**
DRAWING TITLE: **GARAGE STAIR SECTIONS (NE AND SE CORNER)**

PROJECT NO. **301-0047**
DRAWING NO. **A-401**
SHEET NO.

Border Version: 11/14/08

GENERAL NOTES

1. ALL MTL INCLUDING STRUCTURAL MTL TO BE GALV STL, UNO
2. HAND RAILINGS TO BE ST STL
3. STAIR STRINGERS TO BE PRECAST CONCRETE
4. CRASH GUARD AND GUARD RAIL TO GALV STL
5. ORSOGRIL TO BE GALV STL
6. ALL GLASS TO BE STRUCTURAL LAMINATED GLASS GLUED TO ALUM MULLIONS WITH CERAMIC FRIT. UNO.

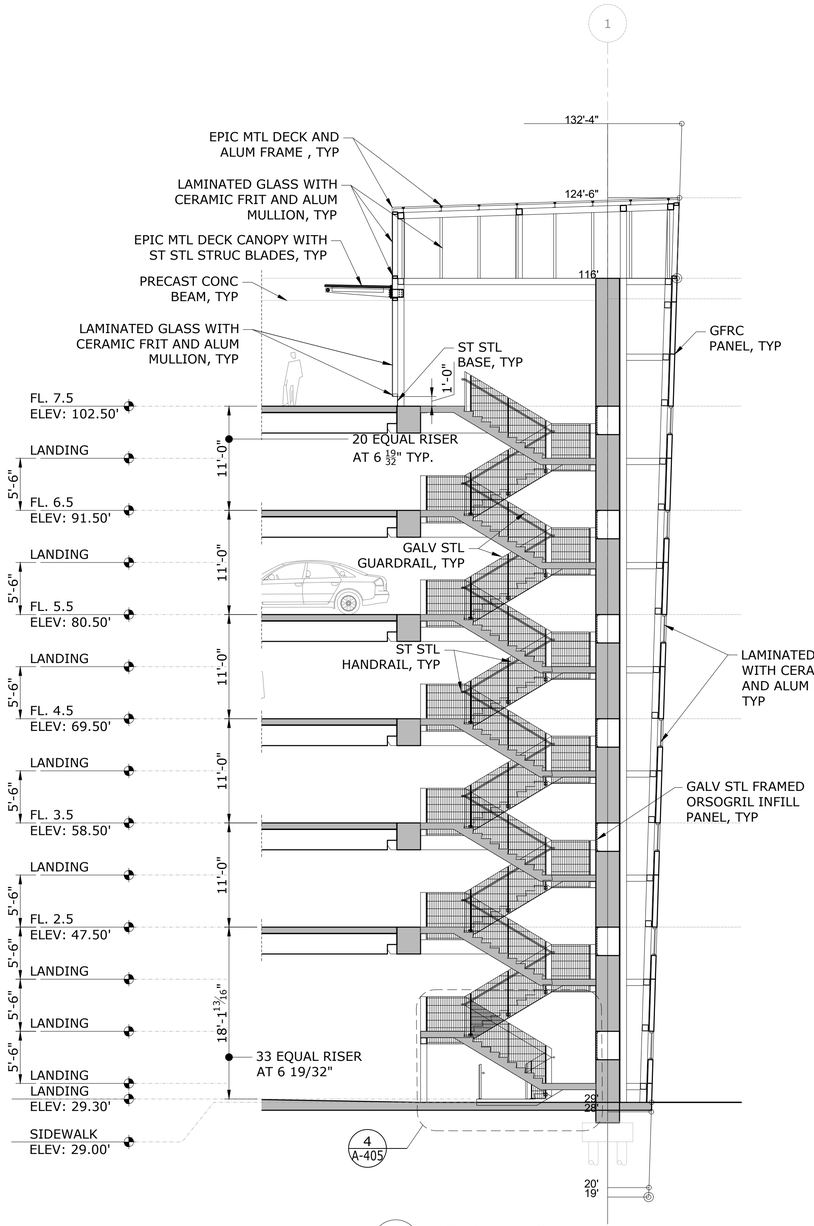

1 A-402 STAIR 3 SECTION
1/8"=1'-0" 0 4' 8' 16'

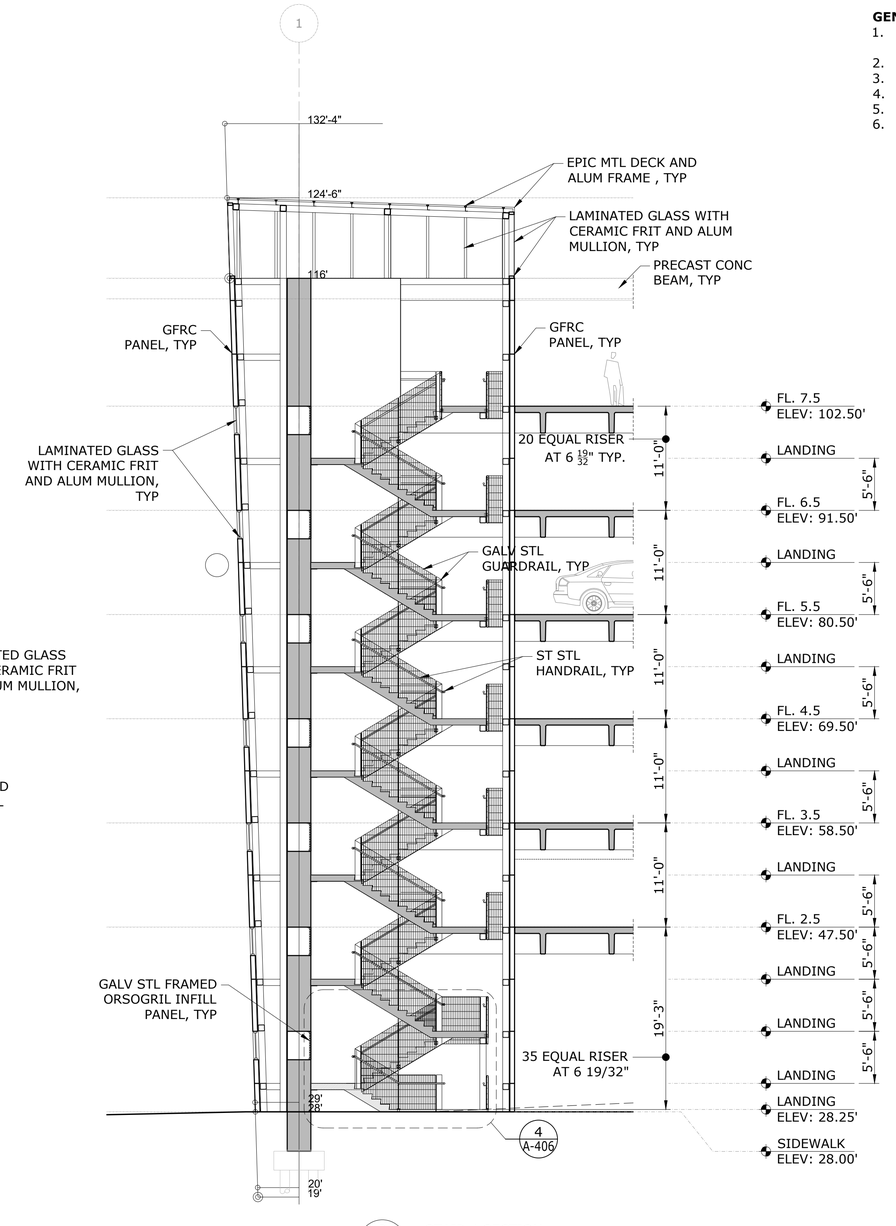

2 A-401 STAIR 4 SECTION
1/8"=1'-0" 0 4' 8' 16'

DRAFT - NOT FOR BID OR CONSTRUCTION

BASE TECHNICAL CONCEPT PLANS

THIS IS A PROGRESS DRAWING AND IS NOT INTENDED TO BE RELIED UPON BY ANY PARTY AS INDICATING A FINAL DESIGN OR TO BE INTENDED FOR BIDDING OR CONSTRUCTION PURPOSES. THIS PROGRESS DRAWING IS PROVIDED SOLELY FOR INFORMATION WITHOUT REPRESENTATION OR WARRANTY OF ANY KIND. THIS PROGRESS DRAWING HAS NOT BEEN SUBJECT TO A FORMAL QUALITY CONTROL CHECKING PROCESS.

REV.	DATE	REVISION DESCRIPTION	SHEET NO.
-	-	-	-
-	-	-	-
-	-	-	-
-	-	-	-
-	-	-	-
-	-	-	-
-	-	-	-

THE INFORMATION, INCLUDING ESTIMATED QUANTITIES OF WORK, SHOWN ON THESE SHEETS IS BASED ON LIMITED INVESTIGATIONS BY THE STATE AND IS IN NO WAY WARRANTED TO INDICATE THE CONDITIONS OF ACTUAL QUANTITIES OF WORK WHICH WILL BE REQUIRED.

Plotted Date: $DATE$

DESIGNER/DRAFTER: **JK**

CHECKED BY: **RD**

SCALE AS NOTED

STATE OF CONNECTICUT
DEPARTMENT OF TRANSPORTATION

Filename: $FILEA$

SIGNATURE/ BLOCK:

STV INC.
225 PARK AVENUE SOUTH
NEW YORK, NY 1003

PROJECT TITLE:

STAMFORD PARKING GARAGE

TOWN: **STAMFORD**

DRAWING TITLE: **GARAGE STAIR SECTIONS (NW AND SW CORNER)**

PROJECT NO. **301-0047**

DRAWING NO. **A-402**

SHEET NO.

Border Version: 11/14/08

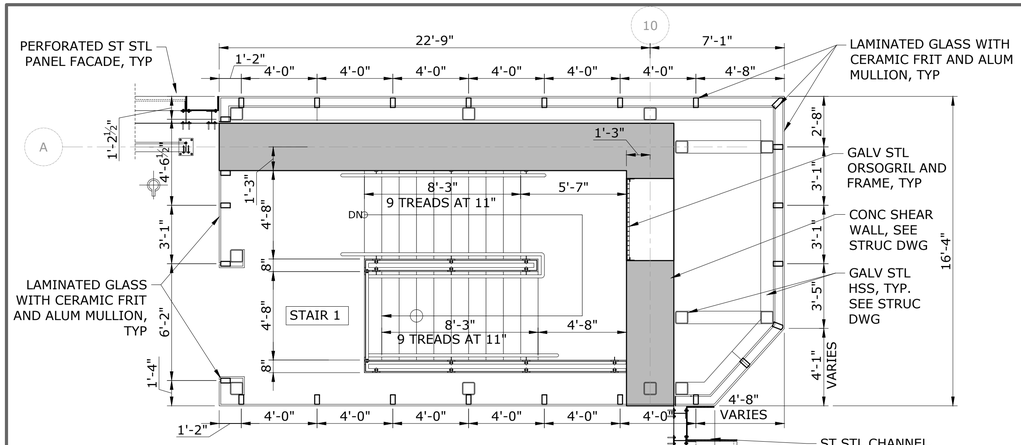

3 A-403 EIGHT FLOOR STAIR PLAN
1/4"=1'-0" 0 2' 4' 8'

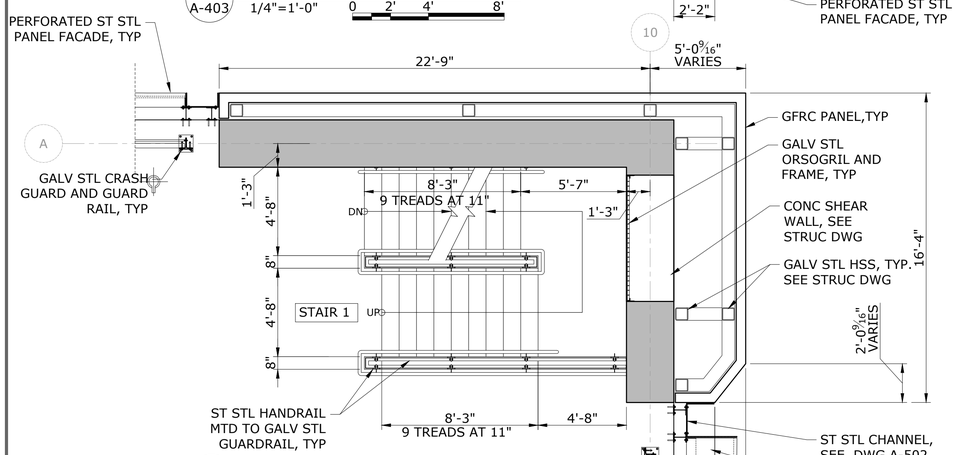

2 A-403 SECOND THROUGH SEVENTH FLOOR STAIR PLAN (TYP.)
1/4"=1'-0" 0 2' 4' 8'

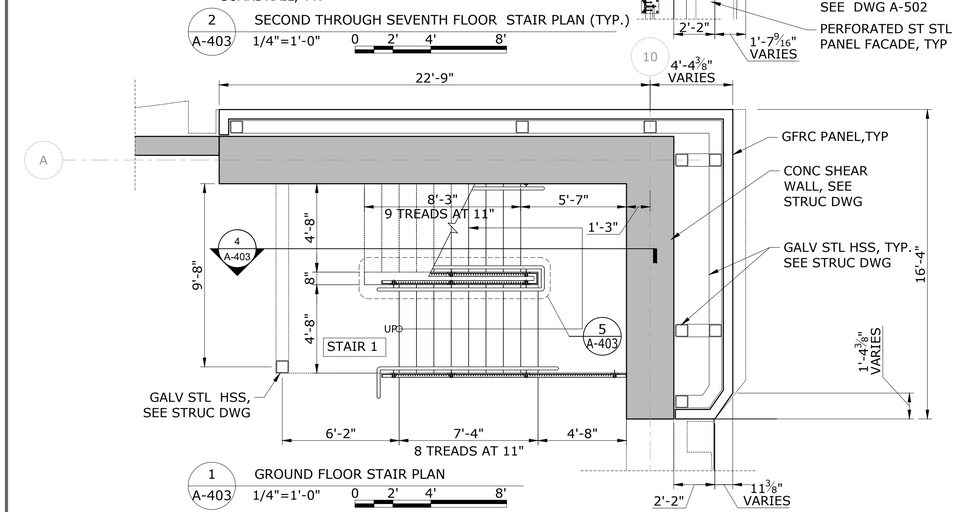

1 A-403 GROUND FLOOR STAIR PLAN
1/4"=1'-0" 0 2' 4' 8'

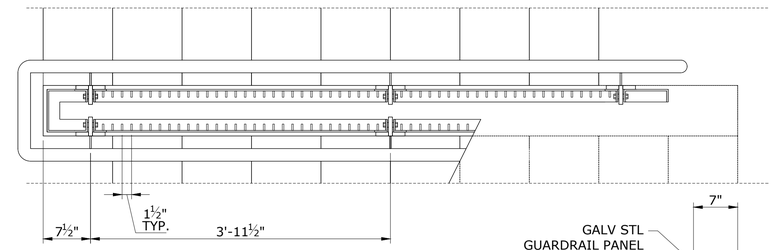

5 A-403 ENLARGED RAILING DETAIL
1"=1'-0" 0 1' 2'

GENERAL NOTES

1. ALL MTL INCLUDING STRUCTURAL MTL TO BE GALV STL, UNO
2. HAND RAILINGS TO BE ST STL
3. STAIR STRINGERS TO BE PRECAST CONCRETE
4. CRASH GUARD AND GUARD RAIL TO GALV STL
5. ORSOGRIL TO BE GALV STL
6. ALL GLASS TO BE STRUCTURAL LAMINATED GLASS GLUED TO ALUM MULLIONS WITH CERAMIC FRIT. UNO.
7. GUARD RAIL HEIGHT TO BE 3'-8" TYP.
8. HANDRAIL HEIGHT TO BE 2'-10" TYP.

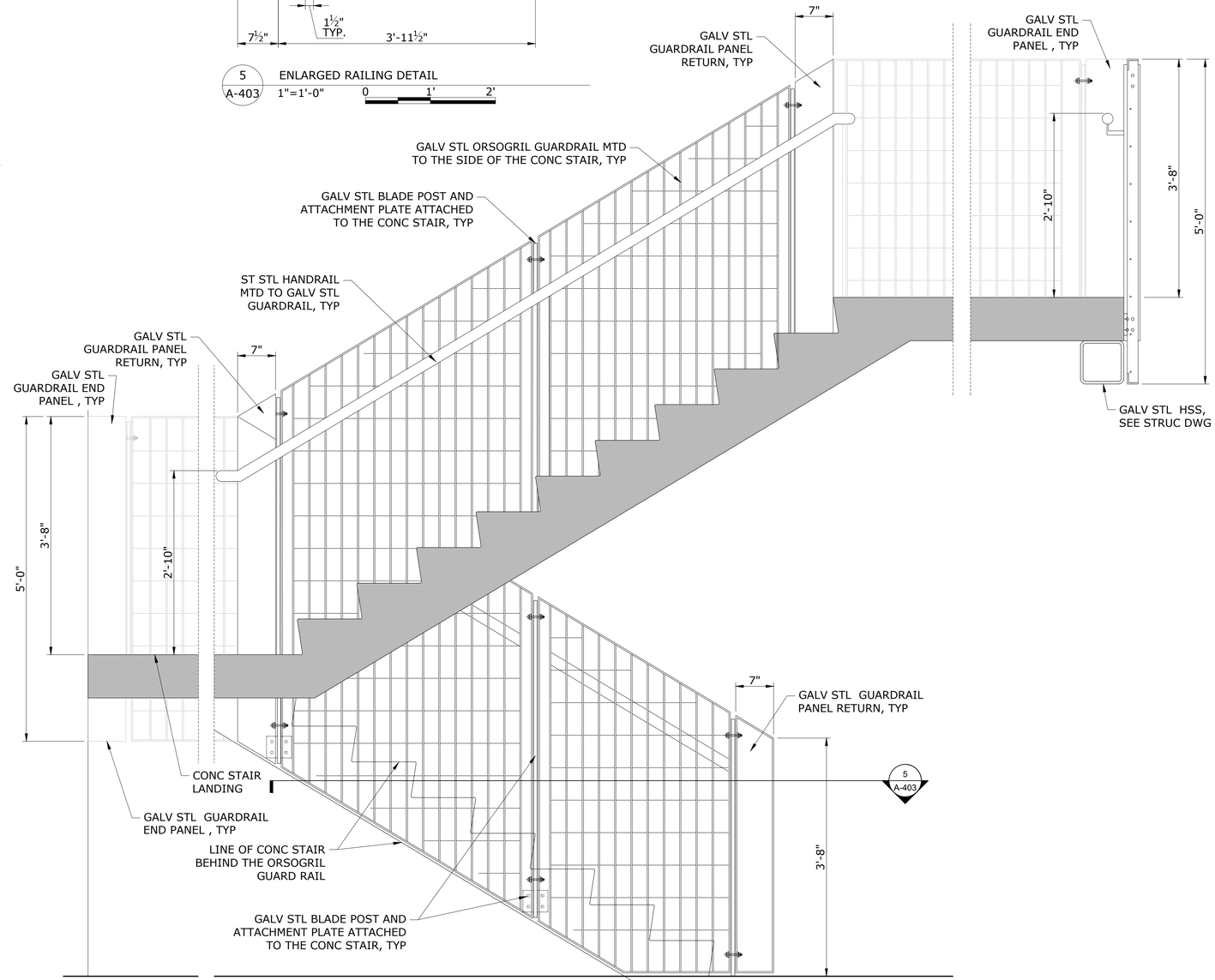

4 A-403 ENLARGED SECTION AT TOP AND BOTTOM OF STAIR
1"=1'-0" 0 1' 2'

DRAFT - NOT FOR BID OR CONSTRUCTION

BASE TECHNICAL CONCEPT PLANS

THIS IS A PROGRESS DRAWING AND IS NOT INTENDED TO BE RELIED UPON BY ANY PARTY AS INDICATING A FINAL DESIGN OR TO BE INTENDED FOR BIDDING OR CONSTRUCTION PURPOSES. THIS PROGRESS DRAWING IS PROVIDED SOLELY FOR INFORMATION WITHOUT REPRESENTATION OR WARRANTY OF ANY KIND. THIS PROGRESS DRAWING HAS NOT BEEN SUBJECT TO A FORMAL QUALITY CONTROL CHECKING PROCESS.

REV.	DATE	REVISION DESCRIPTION	SHEET NO.
-	-	-	-
-	-	-	-
-	-	-	-
-	-	-	-
-	-	-	-
-	-	-	-
-	-	-	-

THE INFORMATION, INCLUDING ESTIMATED QUANTITIES OF WORK, SHOWN ON THESE SHEETS IS BASED ON LIMITED INVESTIGATIONS BY THE STATE AND IS IN NO WAY WARRANTED TO INDICATE THE CONDITIONS OF ACTUAL QUANTITIES OF WORK WHICH WILL BE REQUIRED.

Plotted Date: $DATE$

DESIGNER/DRAFTER: **JK**
CHECKED BY: **RD**
SCALE AS NOTED

STATE OF CONNECTICUT
DEPARTMENT OF TRANSPORTATION

Filename: $FILEA$

SIGNATURE/ BLOCK:
STV INC.
225 PARK AVENUE SOUTH
NEW YORK, NY 1003

PROJECT TITLE:
STAMFORD PARKING GARAGE

TOWN: **STAMFORD**
PROJECT NO. **301-0047**
DRAWING TITLE: **GARAGE STAIR 1 DETAIL PLANS (NE CORNER)**
DRAWING NO. **A-403**
SHEET NO.

Border Version: 11/14/08

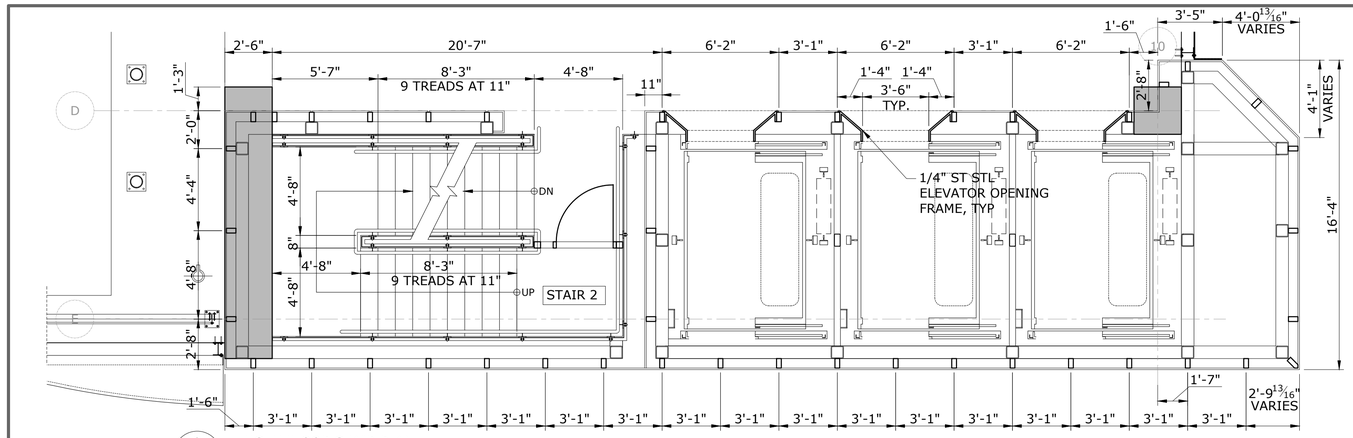

3 A-404 EIGHT FLOOR STAIR PLAN 1/4"=1'-0" 0 2' 4' 8'

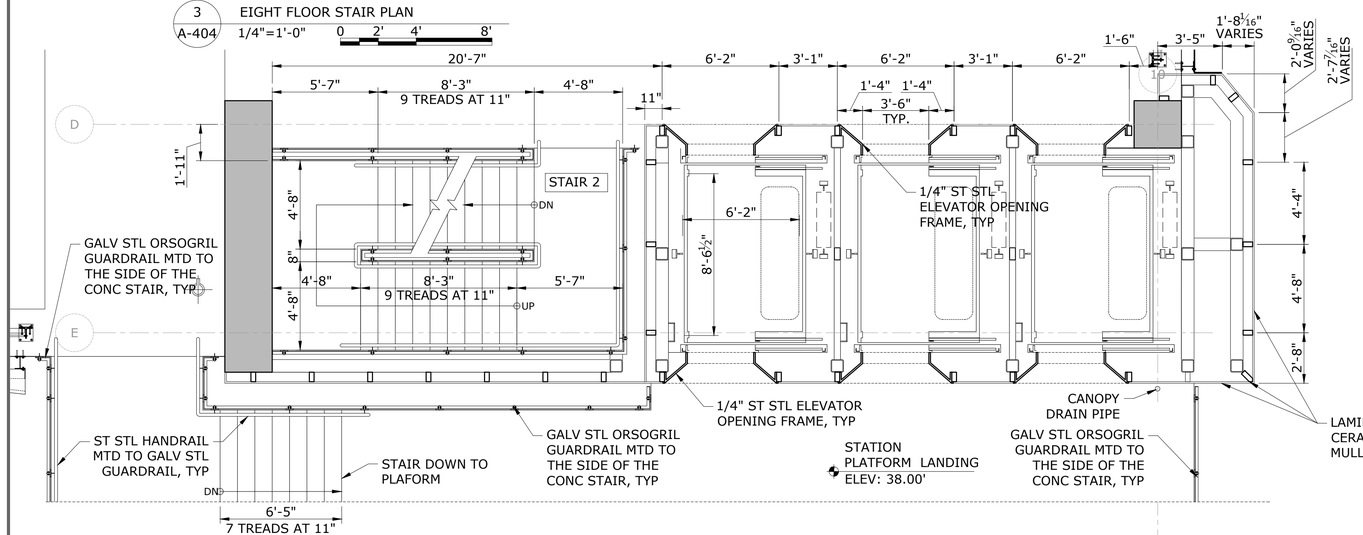

2 A-404 SECOND THROUGH SEVENTH FLOOR STAIR PLAN (TYP.) 1/4"=1'-0" 0 2' 4' 8'

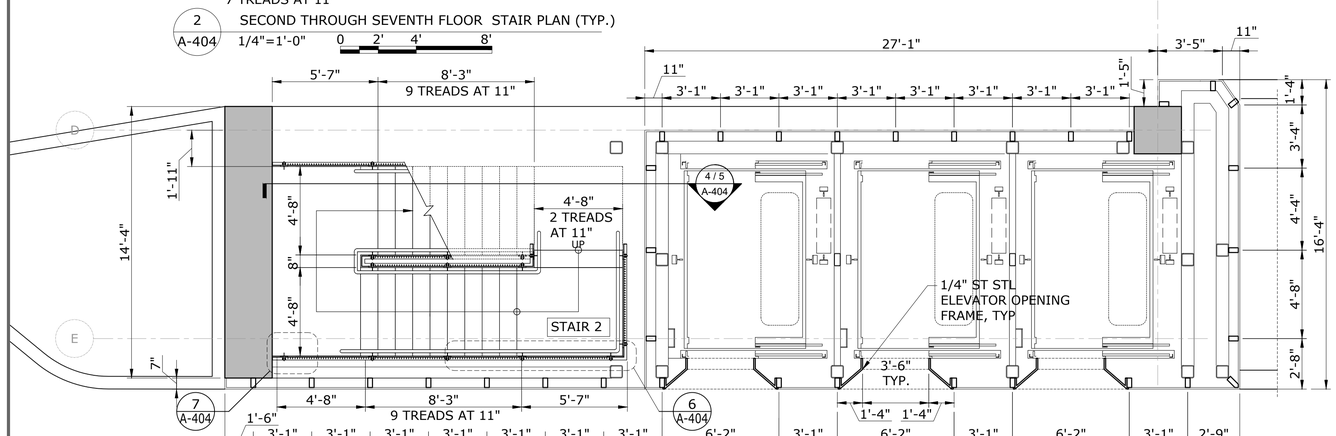

1 A-404 GROUND FLOOR STAIR PLAN 1/4"=1'-0" 0 2' 4' 8'

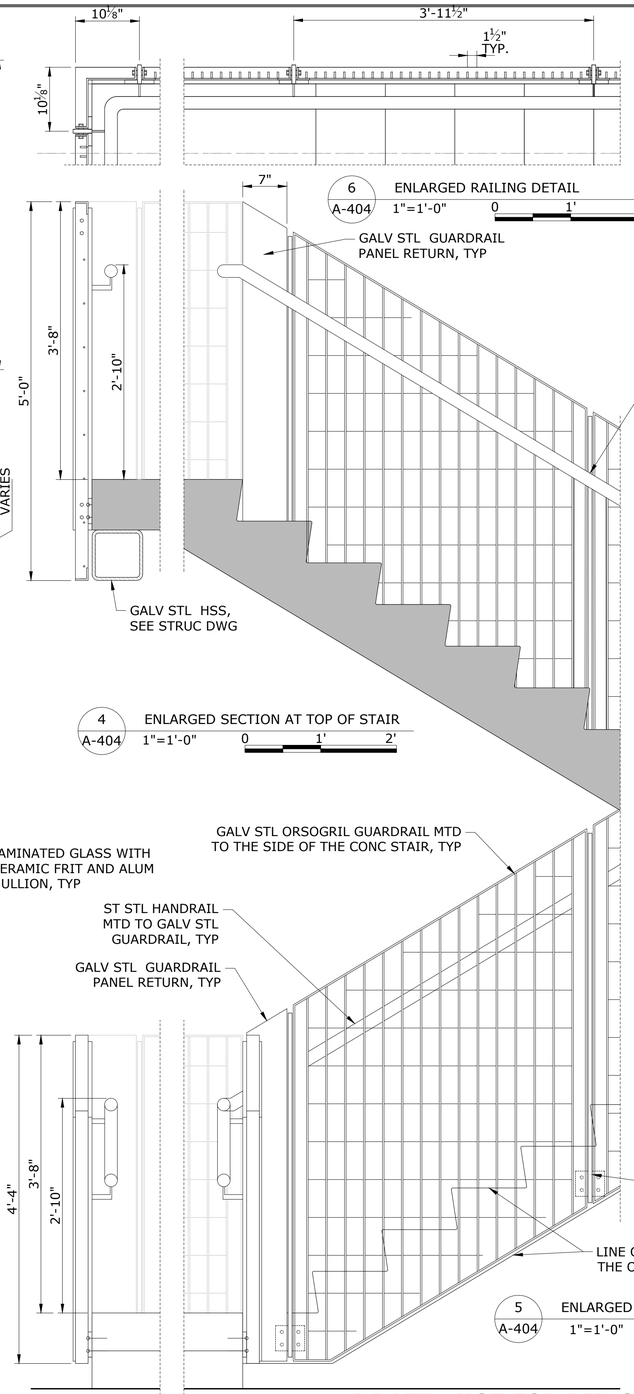

6 A-404 ENLARGED RAILING DETAIL 1"=1'-0" 0 1' 2'

7 A-404 ENLARGED RAILING DETAIL 1"=1'-0" 0 1' 2'

4 A-404 ENLARGED SECTION AT TOP OF STAIR 1"=1'-0" 0 1' 2'

5 A-404 ENLARGED SECTION AT BOTTOM OF STAIR 1"=1'-0" 0 1' 2'

GENERAL NOTES

1. ALL MTL INCLUDING STRUCTURAL MTL TO BE GALV STL, UNO
2. HAND RAILINGS TO BE ST STL
3. STAIR STRINGERS TO BE PRECAST CONCRETE
4. CRASH GUARD AND GUARD RAIL TO GALV STL
5. ORSOGRIL TO BE GALV STL
6. ALL GLASS TO BE STRUCTURAL LAMINATED GLASS GLUED TO ALUM MULLIONS WITH CERAMIC FRIT. UNO.
7. GUARD RAIL HEIGHT TO BE 3'-8" TYP.
8. HANDRAIL HEIGHT TO BE 2'-10" TYP.

DRAFT - NOT FOR BID OR CONSTRUCTION

BASE TECHNICAL CONCEPT PLANS

THIS IS A PROGRESS DRAWING AND IS NOT INTENDED TO BE RELIED UPON BY ANY PARTY AS INDICATING A FINAL DESIGN OR TO BE INTENDED FOR BIDDING OR CONSTRUCTION PURPOSES. THIS PROGRESS DRAWING IS PROVIDED SOLELY FOR INFORMATION WITHOUT REPRESENTATION OR WARRANTY OF ANY KIND. THIS PROGRESS DRAWING HAS NOT BEEN SUBJECT TO A FORMAL QUALITY CONTROL CHECKING PROCESS.

REV.	DATE	REVISION DESCRIPTION	SHEET NO.
-	-	-	-
-	-	-	-
-	-	-	-
-	-	-	-
-	-	-	-
-	-	-	-
-	-	-	-

THE INFORMATION, INCLUDING ESTIMATED QUANTITIES OF WORK, SHOWN ON THESE SHEETS IS BASED ON LIMITED INVESTIGATIONS BY THE STATE AND IS IN NO WAY WARRANTED TO INDICATE THE CONDITIONS OF ACTUAL QUANTITIES OF WORK WHICH WILL BE REQUIRED.

Plotted Date: $DATE$

DESIGNER/DRAFTER: **JK**

CHECKED BY: **RD**

SCALE AS NOTED

STATE OF CONNECTICUT
DEPARTMENT OF TRANSPORTATION

Filename: $FILEA$

SIGNATURE/ BLOCK:

STV INC.
225 PARK AVENUE SOUTH
NEW YORK, NY 1003

PROJECT TITLE: **STAMFORD PARKING GARAGE**

TOWN: **STAMFORD**

DRAWING TITLE: **GARAGE STAIR 2 DETAIL PLANS (SE CORNER)**

PROJECT NO. **301-0047**

DRAWING NO. **A-404**

SHEET NO.

Border Version: 11/14/08

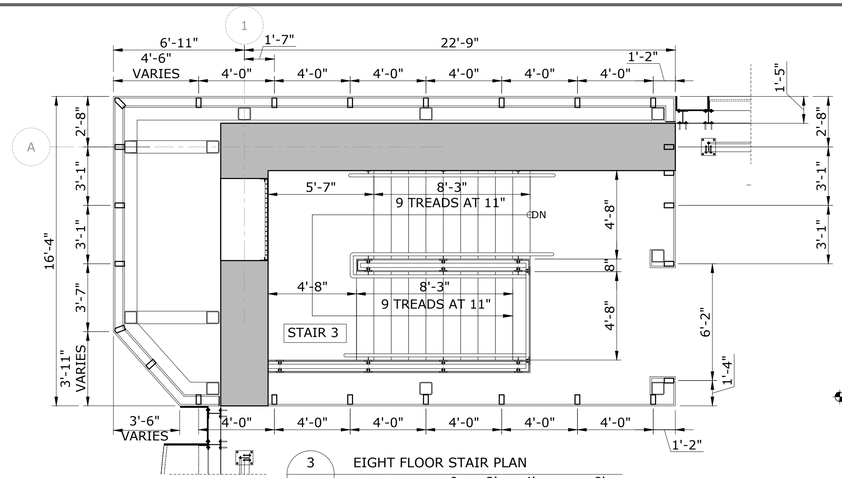

3 A-405 EIGHT FLOOR STAIR PLAN
1/4"=1'-0"

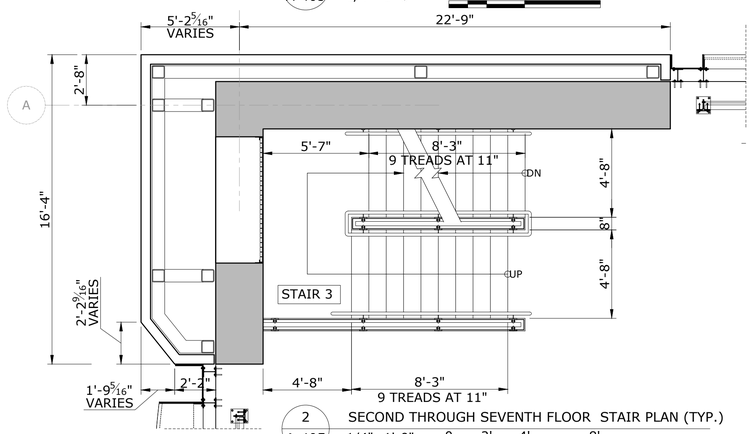

2 A-405 SECOND THROUGH SEVENTH FLOOR STAIR PLAN (TYP.)
1/4"=1'-0"

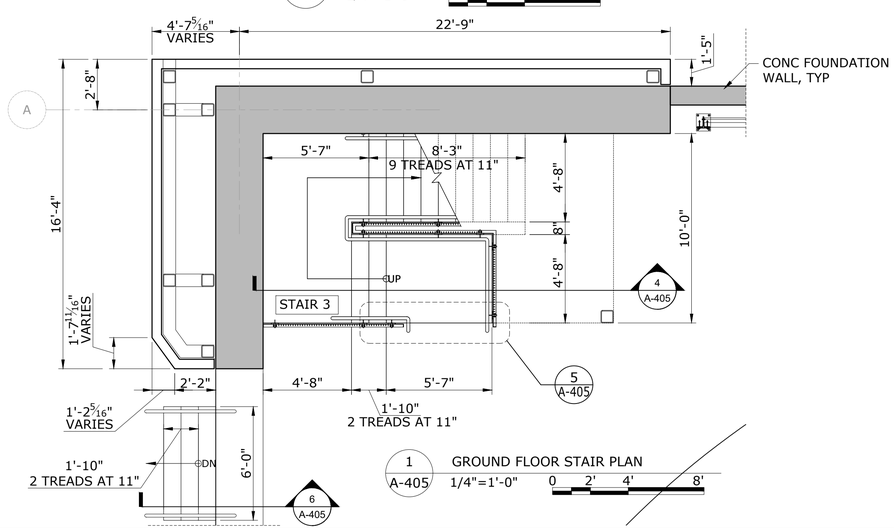

1 A-405 GROUND FLOOR STAIR PLAN
1/4"=1'-0"

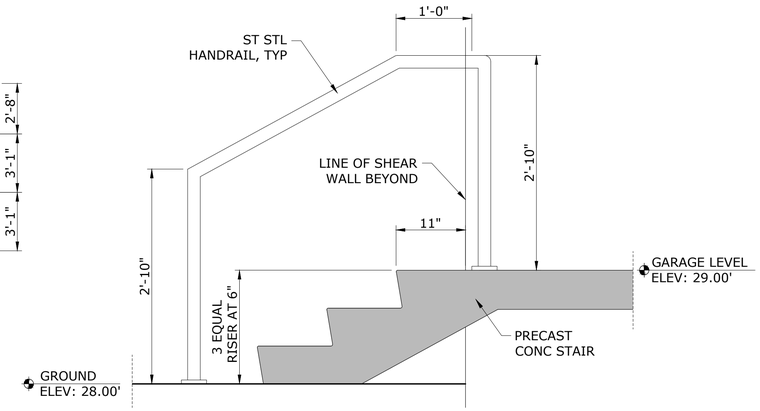

6 A-405 ENLARGED RAILING DETAIL
1"=1'-0"

GENERAL NOTES

1. ALL MTL INCLUDING STRUCTURAL MTL TO BE GALV STL, UNO
2. HAND RAILINGS TO BE ST STL
3. STAIR STRINGERS TO BE PRECAST CONCRETE
4. CRASH GUARD AND GUARD RAIL TO GALV STL
5. ORSOGRIL TO BE GALV STL
6. ALL GLASS TO BE STRUCTURAL LAMINATED GLASS GLUED TO ALUM MULLIONS WITH CERAMIC FRIT. UNO.
7. GUARD RAIL HEIGHT TO BE 3'-8" TYP.
8. HANDRAIL HEIGHT TO BE 2'-10" TYP.

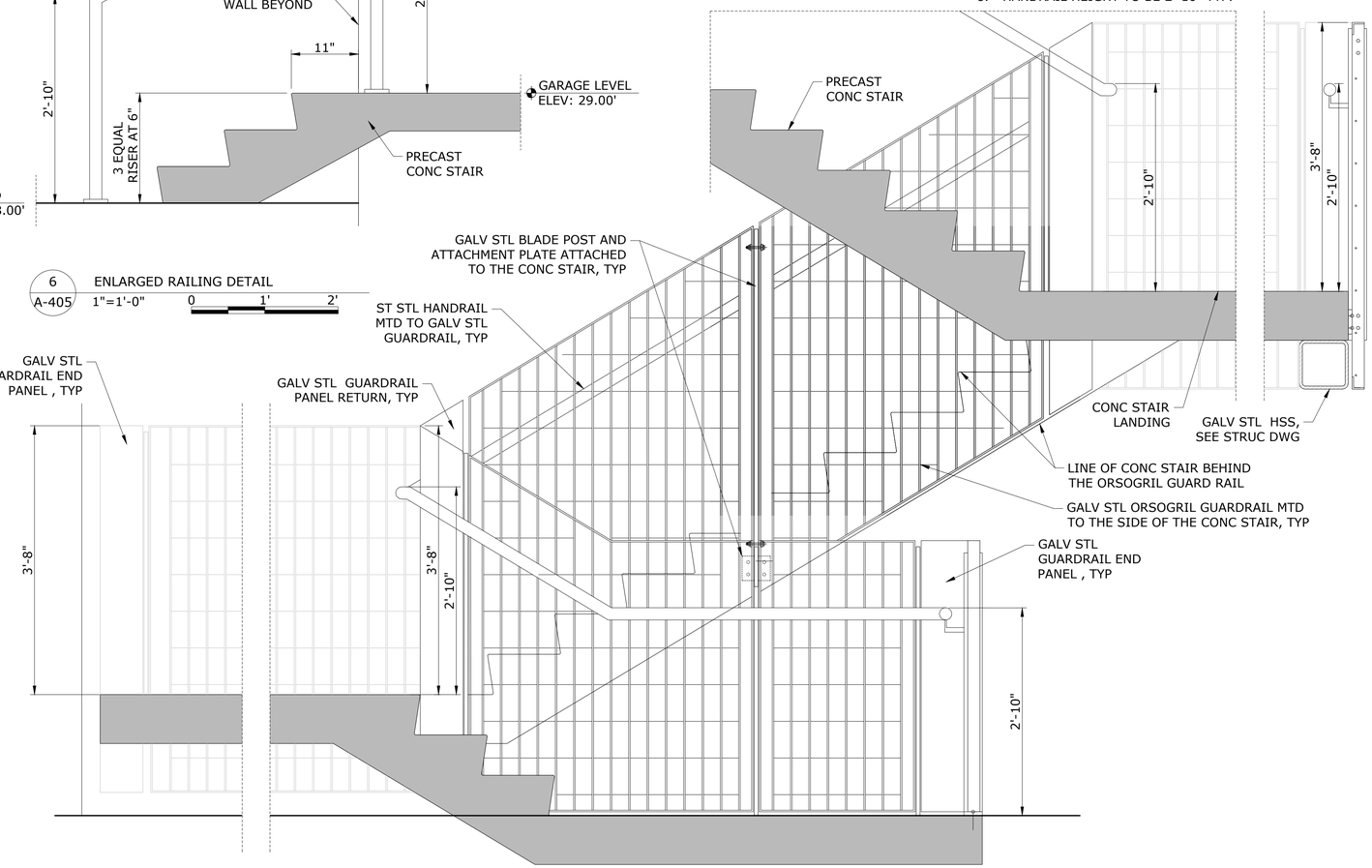

4 A-405 ENLARGED SECTION AT THE TOP AND BOTTOM OF STAIR
1"=1'-0"

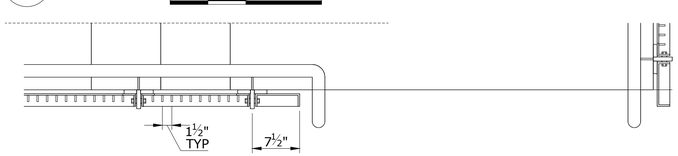

5 A-405 ENLARGED RAILING DETAIL
1"=1'-0"

DRAFT - NOT FOR BID OR CONSTRUCTION

BASE TECHNICAL CONCEPT PLANS

THIS IS A PROGRESS DRAWING AND IS NOT INTENDED TO BE RELIED UPON BY ANY PARTY AS INDICATING A FINAL DESIGN OR TO BE INTENDED FOR BIDDING OR CONSTRUCTION PURPOSES. THIS PROGRESS DRAWING IS PROVIDED SOLELY FOR INFORMATION WITHOUT REPRESENTATION OR WARRANTY OF ANY KIND. THIS PROGRESS DRAWING HAS NOT BEEN SUBJECT TO A FORMAL QUALITY CONTROL CHECKING PROCESS.

REV.	DATE	REVISION DESCRIPTION	SHEET NO.
-	-	-	-
-	-	-	-
-	-	-	-
-	-	-	-
-	-	-	-
-	-	-	-
-	-	-	-

THE INFORMATION, INCLUDING ESTIMATED QUANTITIES OF WORK, SHOWN ON THESE SHEETS IS BASED ON LIMITED INVESTIGATIONS BY THE STATE AND IS IN NO WAY WARRANTED TO INDICATE THE CONDITIONS OF ACTUAL QUANTITIES OF WORK WHICH WILL BE REQUIRED.

Plotted Date: $DATE$

DESIGNER/DRAFTER: **JK**
CHECKED BY: **RD**
SCALE AS NOTED

STATE OF CONNECTICUT
DEPARTMENT OF TRANSPORTATION

Filename: $FILEA$

SIGNATURE/
BLOCK:

STV INC.
225 PARK AVENUE SOUTH
NEW YORK, NY 1003

PROJECT TITLE:
STAMFORD
PARKING GARAGE

TOWN: **STAMFORD**

PROJECT NO. **301-0047**

DRAWING TITLE:
GARAGE STAIR 3
DETAIL PLANS (NW CORNER)

DRAWING NO. **A-405**

SHEET NO.

Border Version: 11/14/08

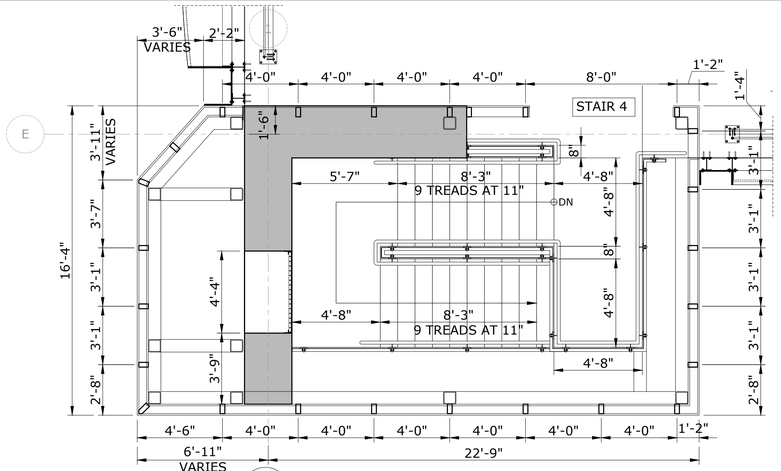

3 A-406 EIGHT FLOOR STAIR PLAN
1/4"=1'-0"

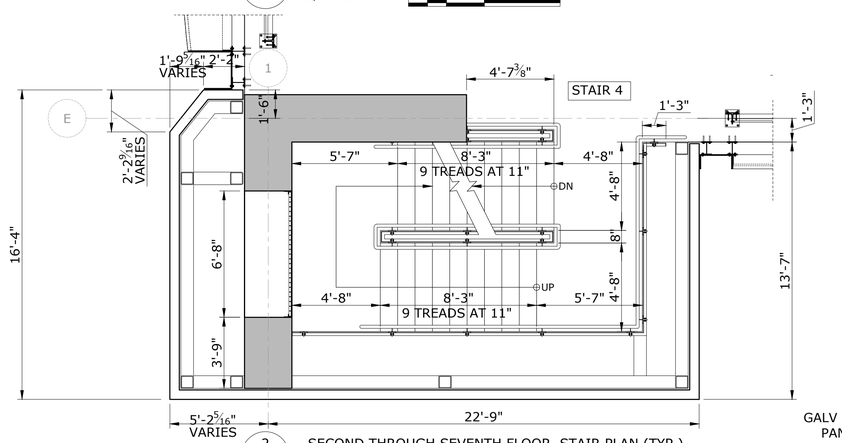

2 A-406 SECOND THROUGH SEVENTH FLOOR STAIR PLAN (TYP.)
1/4"=1'-0"

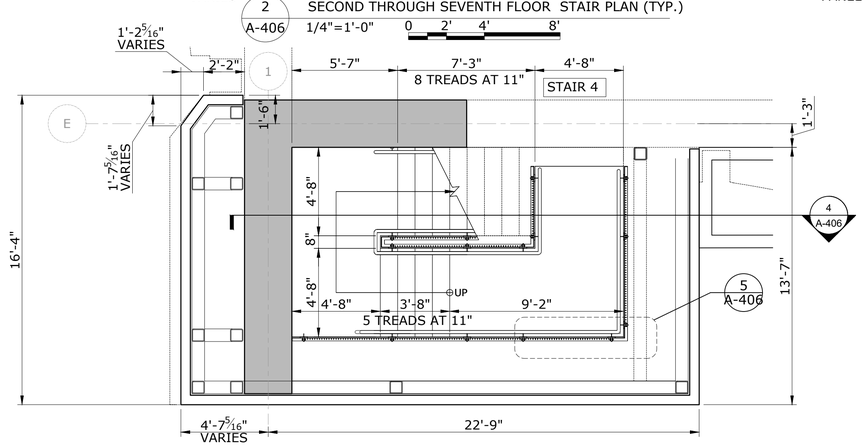

1 A-406 GROUND FLOOR STAIR PLAN
1/4"=1'-0"

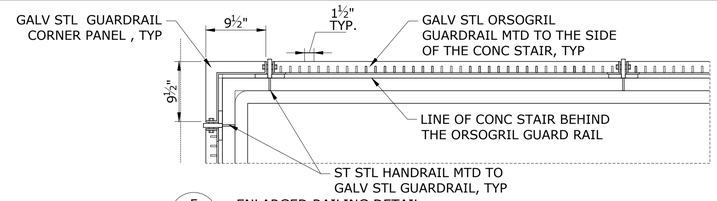

5 A-406 ENLARGED RAILING DETAIL
1"=1'-0"

GENERAL NOTES

1. ALL MTL INCLUDING STRUCTURAL MTL TO BE GALV STL, UNO
2. HAND RAILINGS TO BE ST STL
3. STAIR STRINGERS TO BE PRECAST CONCRETE
4. CRASH GUARD AND GUARD RAIL TO GALV STL
5. ORSOGRIL TO BE GALV STL
6. ALL GLASS TO BE STRUCTURAL LAMINATED GLASS GLUED TO ALUM MULLIONS WITH CERAMIC FRIT. UNO.
7. GUARD RAIL HEIGHT TO BE 3'-8" TYP.
8. HANDRAIL HEIGHT TO BE 2'-10" TYP.

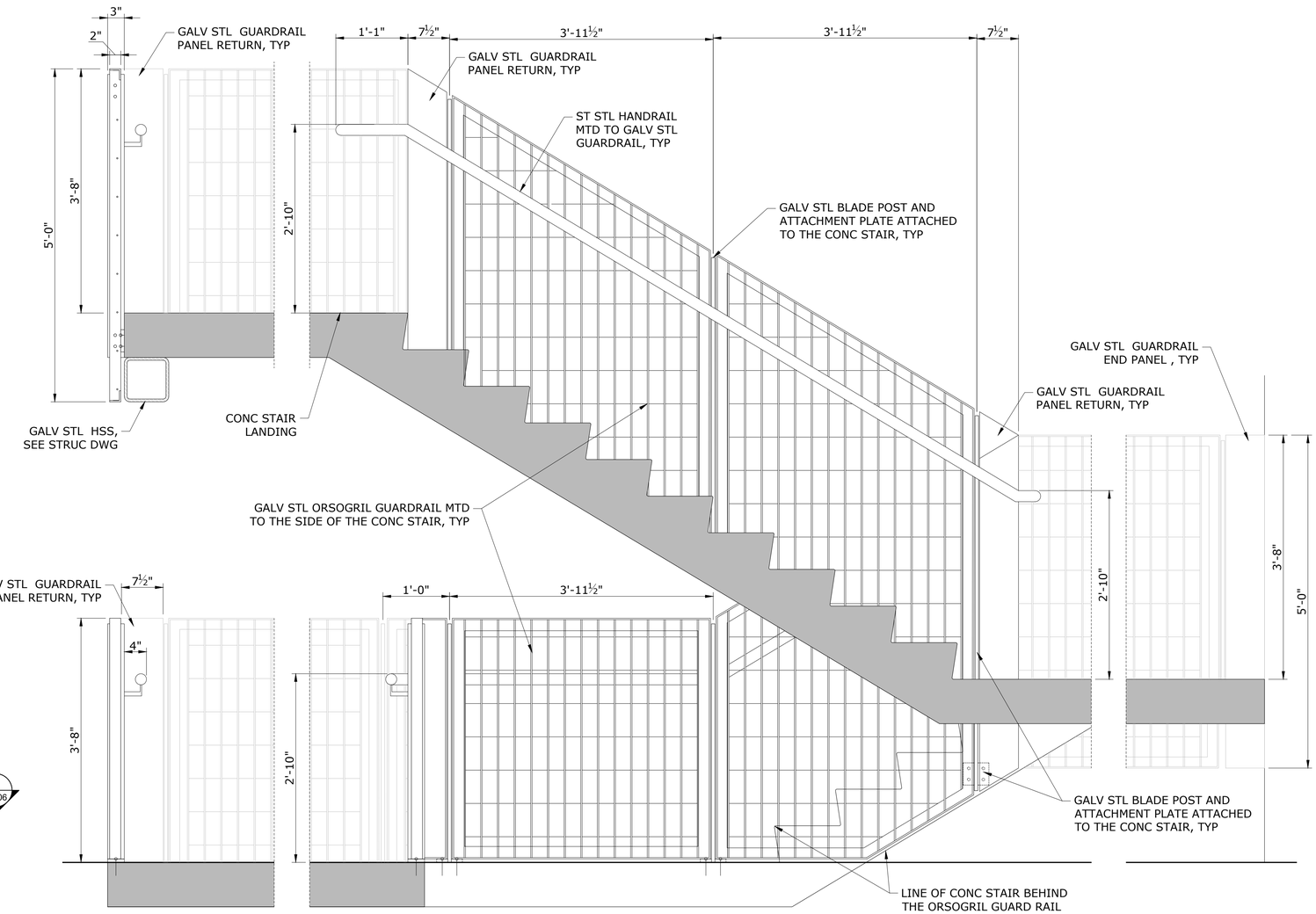

4 A-406 ENLARGED SECTION AT TOP OF STAIR
1"=1'-0"

DRAFT - NOT FOR BID OR CONSTRUCTION

BASE TECHNICAL CONCEPT PLANS

THIS IS A PROGRESS DRAWING AND IS NOT INTENDED TO BE RELIED UPON BY ANY PARTY AS INDICATING A FINAL DESIGN OR TO BE INTENDED FOR BIDDING OR CONSTRUCTION PURPOSES. THIS PROGRESS DRAWING IS PROVIDED SOLELY FOR INFORMATION WITHOUT REPRESENTATION OR WARRANTY OF ANY KIND. THIS PROGRESS DRAWING HAS NOT BEEN SUBJECT TO A FORMAL QUALITY CONTROL CHECKING PROCESS.

REV.	DATE	REVISION DESCRIPTION	SHEET NO.
-	-	-	-
-	-	-	-
-	-	-	-
-	-	-	-
-	-	-	-
-	-	-	-
-	-	-	-

THE INFORMATION, INCLUDING ESTIMATED QUANTITIES OF WORK, SHOWN ON THESE SHEETS IS BASED ON LIMITED INVESTIGATIONS BY THE STATE AND IS IN NO WAY WARRANTED TO INDICATE THE CONDITIONS OF ACTUAL QUANTITIES OF WORK WHICH WILL BE REQUIRED.

Plotted Date: $DATE$

DESIGNER/DRAFTER: JK
CHECKED BY: RD
SCALE AS NOTED

STATE OF CONNECTICUT
DEPARTMENT OF TRANSPORTATION

Filename: $FILEA$

SIGNATURE/BLOCK:
STV INC.
225 PARK AVENUE SOUTH
NEW YORK, NY 1003

PROJECT TITLE: STAMFORD PARKING GARAGE

TOWN: STAMFORD

PROJECT NO. 301-0047

DRAWING TITLE: GARAGE STAIR 4 DETAIL PLANS (SW CORNER)

DRAWING NO. A-406

SHEET NO.

Border Version: 11/14/08

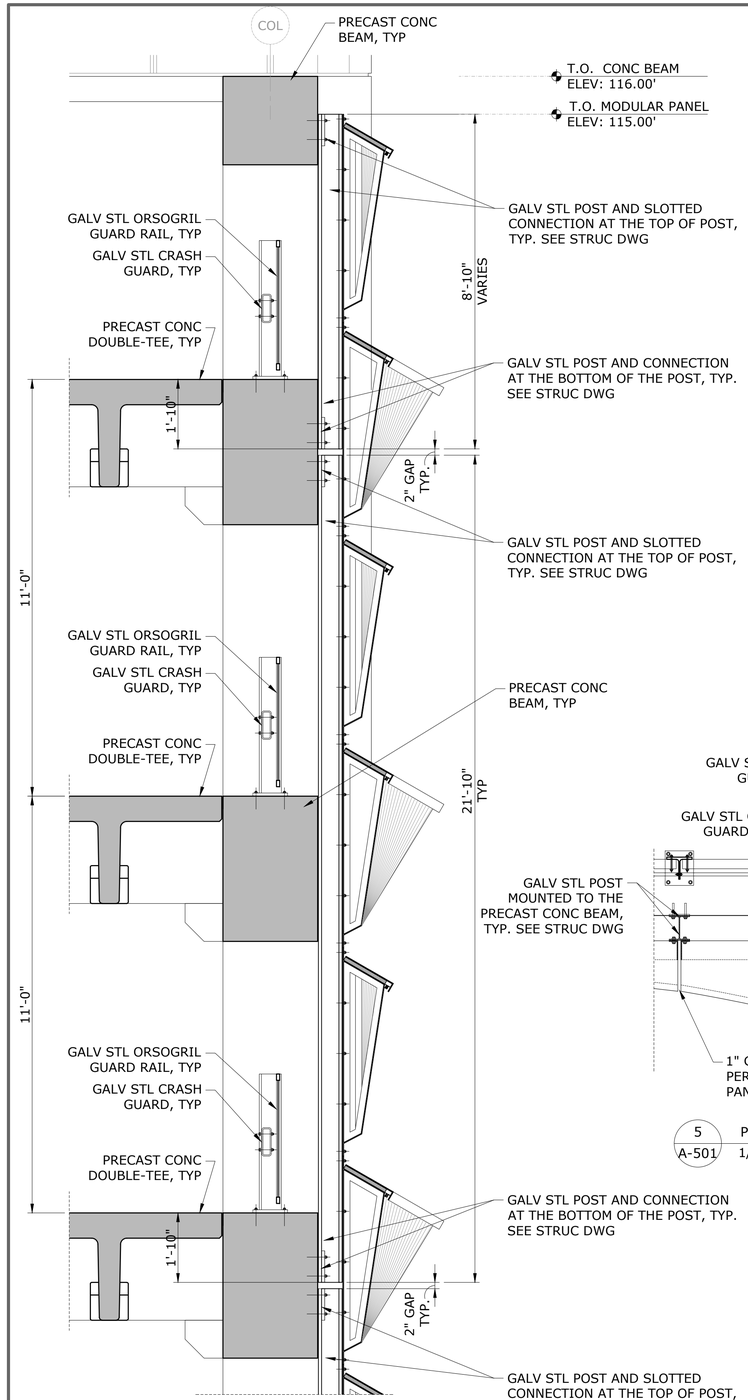

7 A-501 PERFORATED SCREEN MODUAL PANEL MOUNTING DETAIL
1/2"=1'-0" 0 1' 2' 4'

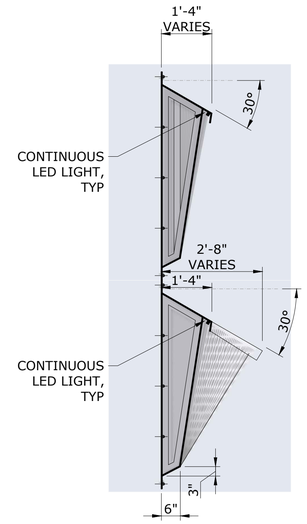

3 A-501 MODULAR PANEL CROSS SECTION
1/2"=1'-0"

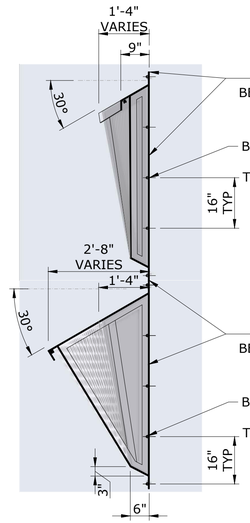

2 A-501 MODULAR PANEL CROSS SECTION
1/2"=1'-0"

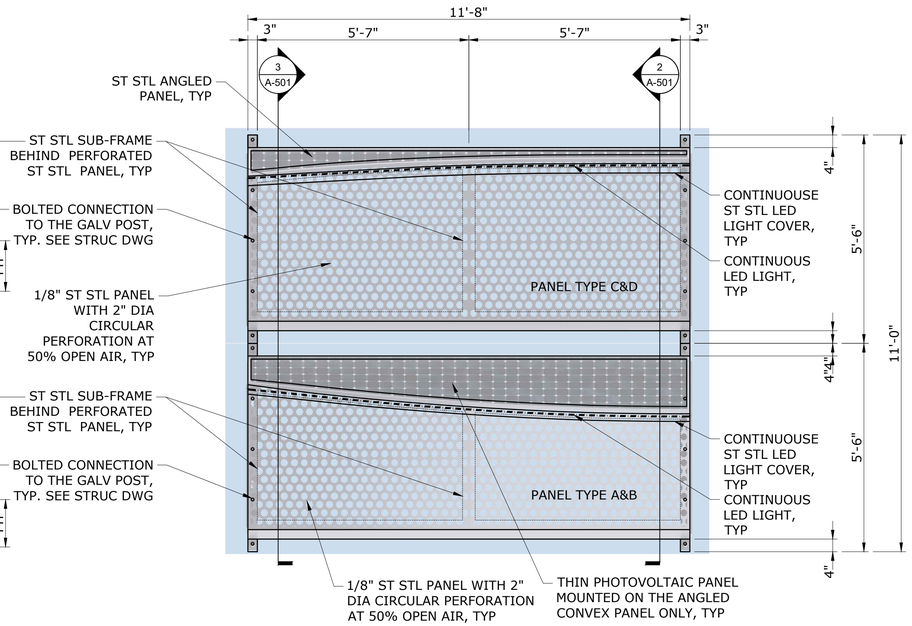

1 A-501 PERFORATED SCREEN MODUAL PANEL (ELEVATION)
1/2"=1'-0" 0 1' 2' 4'

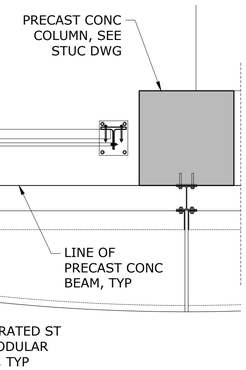

5 A-501 PERFORATED SCEEN MODUAL PANEL MOUNTING PLAN DETAIL
1/2"=1'-0" 0 1' 2' 4'

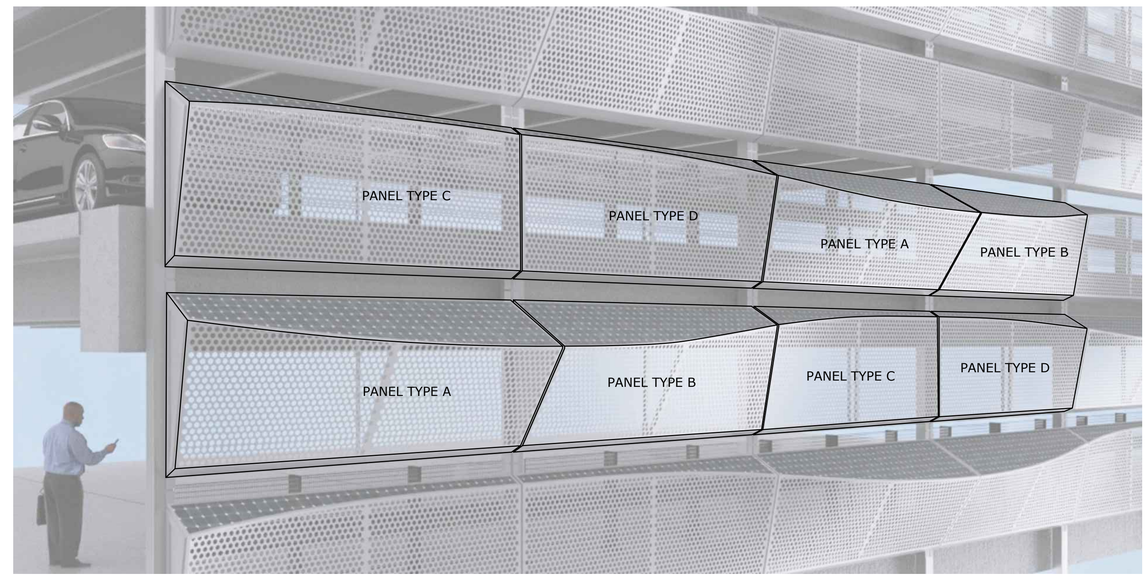

4 A-501 PERSPECTIVE VIEW OF THE PERFORATED MODULAR PANELS
NOT TO SCALE

GENERAL NOTES

1. ALL ST STL TO BE NONE DIRCECTIONAL FINISH. UNO.
2. ALL SUB FRAMING BEHIND THE MODULAR PANELS TO BE ST STL, UNO.
3. ALL STRUCTURAL MEMBERS TO BE GALVANIZED STEEL. UNO.

THIS IS A PROGRESS DRAWING AND IS NOT INTENDED TO BE RELIED UPON BY ANY PARTY AS INDICATING A FINAL DESIGN OR TO BE INTENDED FOR BIDDING OR CONSTRUCTION PURPOSES. THIS PROGRESS DRAWING IS PROVIDED SOLELY FOR INFORMATION WITHOUT REPRESENTATION OR WARRANTY OF ANY KIND. THIS PROGRESS DRAWING HAS NOT BEEN SUBJECT TO A FORMAL QUALITY CONTROL CHECKING PROCESS.

DRAFT - NOT FOR BID OR CONSTRUCTION

BASE TECHNICAL CONCEPT PLANS

REV.	DATE	REVISION DESCRIPTION	SHEET NO.
-	-	-	-
-	-	-	-
-	-	-	-
-	-	-	-
-	-	-	-
-	-	-	-
-	-	-	-

THE INFORMATION, INCLUDING ESTIMATED QUANTITIES OF WORK, SHOWN ON THESE SHEETS IS BASED ON LIMITED INVESTIGATIONS BY THE STATE AND IS IN NO WAY WARRANTED TO INDICATE THE CONDITIONS OF ACTUAL QUANTITIES OF WORK WHICH WILL BE REQUIRED.

Plotted Date: $DATE$

DESIGNER/DRAFTER: JK
CHECKED BY: RD
SCALE AS NOTED

STATE OF CONNECTICUT
DEPARTMENT OF TRANSPORTATION

Filename: $FILEA$

SIGNATURE/ BLOCK:
STV INC.
225 PARK AVENUE SOUTH
NEW YORK, NY 1003

PROJECT TITLE:
STAMFORD
PARKING GARAGE

TOWN: STAMFORD

DRAWING TITLE:
PERFORATED SCREEN FACADE PANEL DETAILS

PROJECT NO. 301-0047
DRAWING NO. A-501
SHEET NO.

Border Version: 11/14/08

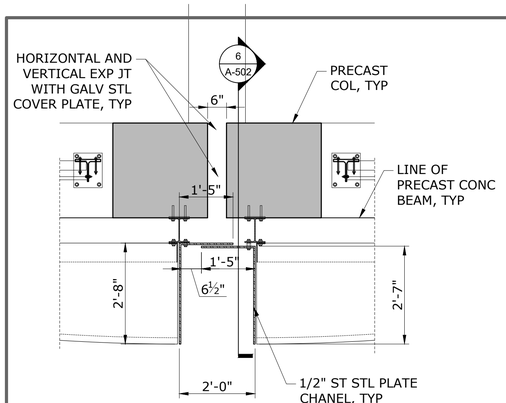

1 A-502 STL CHANNEL TYPE 1
1/2"=1'-0"

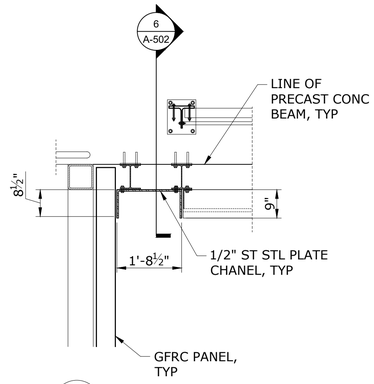

2 A-502 STL CHANNEL TYPE 2
1/2"=1'-0"

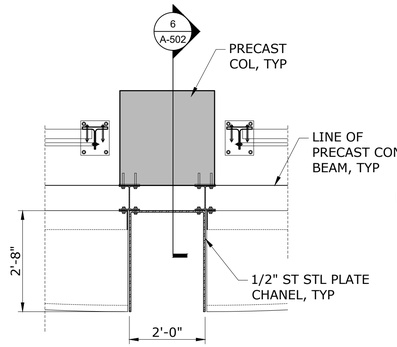

3 A-502 STL CHANNEL TYPE 3
1/2"=1'-0"

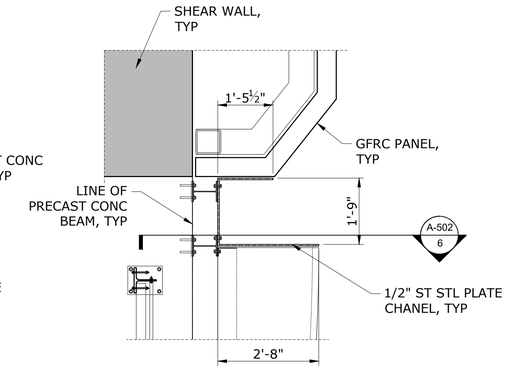

4 A-502 STL CHANNEL TYPE 4
1/2"=1'-0"

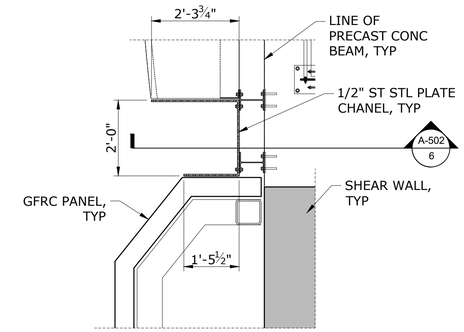

5 A-502 STL CHANNEL TYPE 5
1/2"=1'-0"

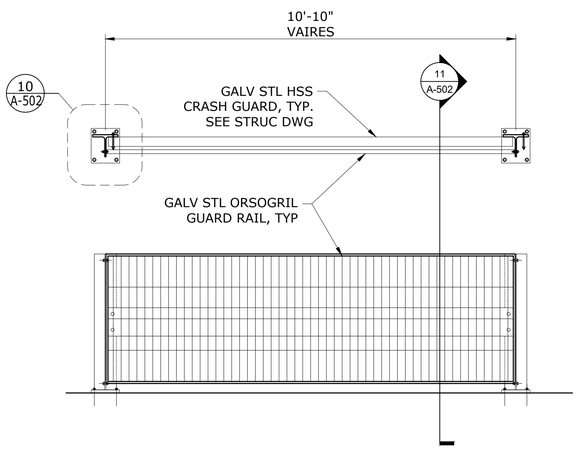

9 A-502 CRASH GUARD AND GUARD RAIL PLAN AND ELEVATION
1/2"=1'-0" 0 1' 2' 4'

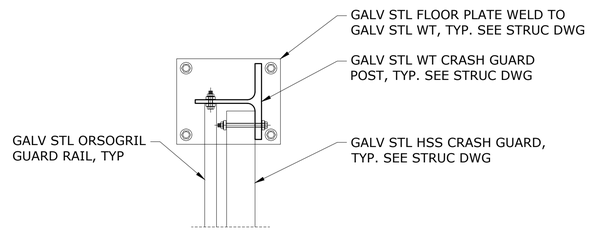

10 A-502 CRASH GUARD AND GUARDRAIL POST PLAN DETSIL
1 1/2"=1'-0"

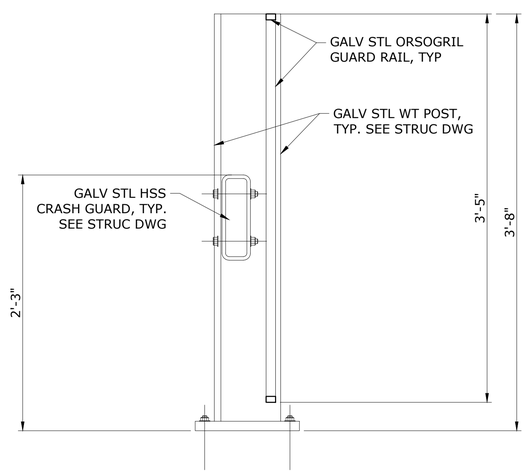

11 A-502 CRASH GUARD AND GUARDRAIL POST SECTION
1 1/2"=1'-0"

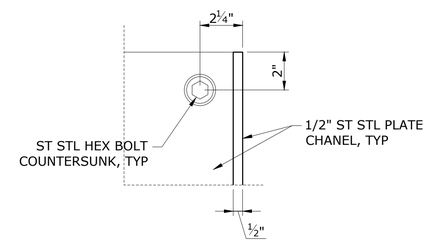

8 A-502 STL CHANNEL BOLT DETAIL
3"=1'-0"

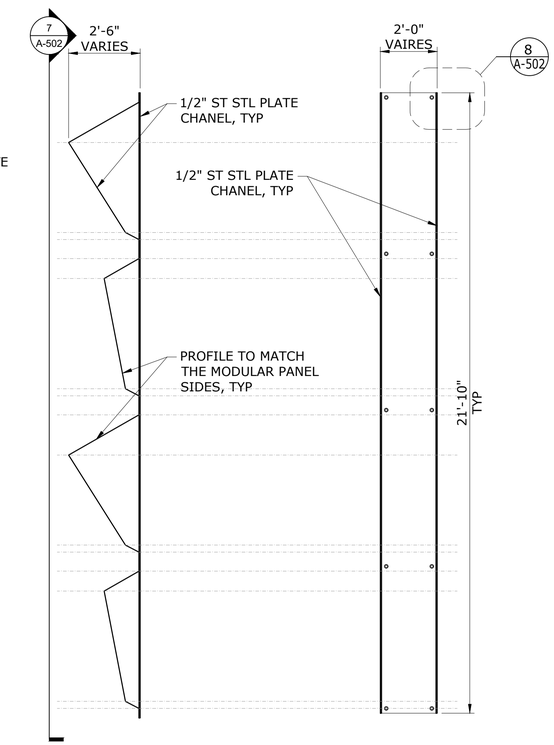

6 A-502 STL CHANNEL SECTION
1/2"=1'-0"

7 A-502 STL CHANNEL ELEVATION
1/2"=1'-0"

GENERAL NOTES

1. ALL ST STL TO BE NONE DIRCECTIONAL FINISH. UNO.
2. ALL SUB FRAMING BEHIND THE MODULAR PANELS TO BE ST STL, UNO.
3. ALL STRUCTURAL MEMBERS TO BE GALVANIZED STEEL. UNO.

DRAFT - NOT FOR BID OR CONSTRUCTION

BASE TECHNICAL CONCEPT PLANS

THIS IS A PROGRESS DRAWING AND IS NOT INTENDED TO BE RELIED UPON BY ANY PARTY AS INDICATING A FINAL DESIGN OR TO BE INTENDED FOR BIDDING OR CONSTRUCTION PURPOSES. THIS PROGRESS DRAWING IS PROVIDED SOLELY FOR INFORMATION WITHOUT REPRESENTATION OR WARRANTY OF ANY KIND. THIS PROGRESS DRAWING HAS NOT BEEN SUBJECT TO A FORMAL QUALITY CONTROL CHECKING PROCESS.

REV.	DATE	REVISION DESCRIPTION	SHEET NO.
-	-	-	-
-	-	-	-
-	-	-	-
-	-	-	-
-	-	-	-
-	-	-	-
-	-	-	-

THE INFORMATION, INCLUDING ESTIMATED QUANTITIES OF WORK, SHOWN ON THESE SHEETS IS BASED ON LIMITED INVESTIGATIONS BY THE STATE AND IS IN NO WAY WARRANTED TO INDICATE THE CONDITIONS OF ACTUAL QUANTITIES OF WORK WHICH WILL BE REQUIRED.

Plotted Date: $DATE$

DESIGNER/DRAFTER: JK
CHECKED BY: RD
SCALE AS NOTED

STATE OF CONNECTICUT
DEPARTMENT OF TRANSPORTATION

Filename: $FILEA$

SIGNATURE/ BLOCK:

STV INC
225 PARK AVENUE SOUTH
NEW YORK, NY 1003

PROJECT TITLE:
STAMFORD
PARKING GARAGE

TOWN: STAMFORD

DRAWING TITLE: MISCELLANEOUS DETAILS

PROJECT NO. 301-0047
DRAWING NO. A-502
SHEET NO.

Border Version: 11/14/08