06 - AQUARION WATER
INDEX OF DRAWINGS

DRAWING NUMBER	DRAWING TITLE	DRAWING NUMBER	DRAWING TITLE
AWC-01	SUBSET 09 - INDEX OF DRAWINGS		
AWC-02	TITLE SHEET - WATER MAIN RELOCATION		
AWC-03	WATER MAIN RELOCATION PLAN		
AWC-04	AQUARION WATER COMPANY- STANDARD DETAILS 1		
AWC-05	AQUARION WATER COMPANY- STANDARD DETAILS 2		
AWC-06	AQUARION WATER COMPANY- STANDARD DETAILS 3		
AWC-07	AQUARION WATER COMPANY- STANDARD DETAILS 5		

DESIGNED BY:

Luchs CONSULTING ENGINEERS

89 COLONY STREET
MERIDEN, CONNECTICUT 06451

STATE OF CONNECTICUT
DORON DAGAN
No. 19537
PROFESSIONAL ENGINEER

Doron Dagan
2020.03.12
16:44:39-04'00'

NEW SHEET ADDED BY ADDENDUM No. 2 - 03/05/2020

REV.	DATE	REVISION DESCRIPTION	SHEET NO.
-	-	-	-
-	-	-	-
-	-	-	-
-	-	-	-
-	-	-	-
-	-	-	-

Luchs CONSULTING ENGINEERS

Plotted Date: 3/9/2020

DESIGNER/DRAFTER: **M.P.**

CHECKED BY: **RJN**

AQUARION

Filename: ...\AWC-01 99-114 115 Subset.dgn

DATE: 5/24/2019

SIGNATURE/ BLOCK:

DESIGNED BY:

LUCHS CONSULTING ENGINEERS, LLC
89 COLONY STREET
MERIDEN, CT 06451

STATE OF CONNECTICUT
DORON DAGAN
No. 19537
PROFESSIONAL ENGINEER

PROJECT TITLE:

RAILROAD-HIGHWAY GRADE CROSSING IMPROVEMENTS U.S. ROUTES 7&44 (MAIN ST.)

TOWN: **NORTH CANAAN**

DRAWING TITLE: **SUBSET 06 INDEX OF DRAWINGS**

PROJECT NO. **99-114/115**

DRAWING NO. **AWC-01**

SHEET NO. **06.01.A2**

WATER MAIN RELOCATION
FOR

RAILROAD-HIGHWAY GRADE CROSSING IMPROVEMENTS
U.S. ROUTES 7&44 (MAIN STREET
NORTH CANAAN, CT

LOCATION MAP
NOT TO SCALE

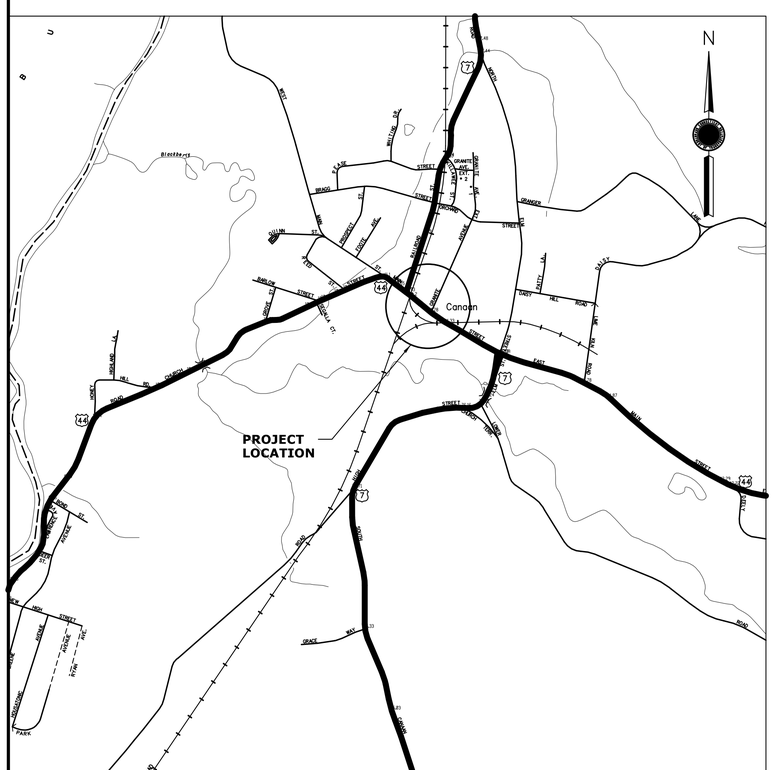

GENERAL NOTES

1. STATE'S CONTRACTOR WILL FURNISH ALL WATER MAIN, VALVES, BENDS, SLEEVES, JOINT RESTRAINTS WITH ACCESSORIES, AND OTHER RELATED HARDWARE REQUIRED FOR INSTALLATION ON THIS PROJECT. CONCRETE FOR THRUST BLOCKS SHALL BE FURNISHED AND INSTALLED BY THE STATE'S CONTRACTOR.
2. ALL WATER MAIN INSTALLATION WORK SHALL CONFORM TO AQUARION WATER COMPANY STANDARDS AND/OR AS DIRECTED BY AQUARION'S FIELD REPRESENTATIVE.
3. TAPPING SLEEVES, TAPPING VALVES AND LINE STOPS, IF REQUIRED, SHALL BE FURNISHED AND INSTALLED BY THE STATE'S CONTRACTOR INCLUDING ALL EXCAVATION, SHORING, DEWATERING AND MISC. CONCRETE WORK.
4. THE CONTRACTOR MUST VERIFY FIELD CONDITIONS PRIOR TO ANY CONSTRUCTION ON THE WATER MAINS FOR THIS PROJECT.
5. ALL NON-TR FLEX PIPE JOINTS SHALL BE MECHANICALLY RESTRAINED. ALL PIPE BENDS SHALL HAVE CONCRETE THRUST BLOCKS IN ADDITION TO RESTRAINTS.
6. EXISTING VALVES TO REMAIN AND TO BE USED FOR TYING IN NEW MAIN SHALL BE WORKED TO VERIFY OPERATION AND LISTENED ON TO IDENTIFY LEAKAGE. UNSATISFACTORY VALVES SHALL BE REPLACED BY AQUARION.

SEQUENCE OF CONSTRUCTION

1. EXCAVATE AND RESTRAIN ALL PIPE JOINTS FROM THE PROPOSED CUT AND CAP @ STATION 11+78 WESTERLY FOR 35 FEET MINIMUM.
2. EXCAVATE AND INSTALL PROPOSED 6" WATER MAIN (DRY) BETWEEN STATION 11+74+/- AND 12+23+/- WITH PLUGS AND 2" AIR VENTS AT EACH END.
3. UTILIZE THE AIR VENTS TO CHLORINATE AND PRESSURE TEST THE DRY LINE.
4. DURING AN OVERNIGHT SHUT DOWN OF THE EXISTING WATER MAIN, CUT AND CAP THE EXISTING MAIN AT STATION 11+78 AND 12+30, INSTALL DRESSER COUPLINGS, GATE VALVES AND CONNECT THE OFFSET WATER MAIN. SWITCH OVER THE THREE SERVICES TO THE OFFSET WATER MAIN.

NEW SHEET ADDED BY ADDENDUM NO. 2 - 03/05/2020

REV.	DATE	REVISION DESCRIPTION	SHEET NO.

Luchs CONSULTING ENGINEERS
Plotted Date: 3/9/2020

DESIGNER/DRAFTER: M.P.
CHECKED BY: R.J.N.

AQUARION
Filename: ...\AWC-02 Title Sheet.dgn
Date: 10/31/2017

SIGNATURE/BLOCK:
DESIGNED BY:
LUCHS CONSULTING ENGINEERS, LLC
89 COLONY STREET
MERIDEN, CT 06451

STATE OF CONNECTICUT
RICHARD J. LUCHS
No. 19615
LICENSED
PROFESSIONAL ENGINEER

PROJECT TITLE:
RAILROAD-HIGHWAY GRADE CROSSING IMPROVEMNTS U.S. ROUTES 7&44 (MAIN ST.)

TOWN: **NORTH CANAAN**
DRAWING TITLE: **TITLE SHEET WATER MAIN RELOCATION**

PROJECT NO. **99-115**
DRAWING NO. **AWC-02**
SHEET NO. **06.02.A2**

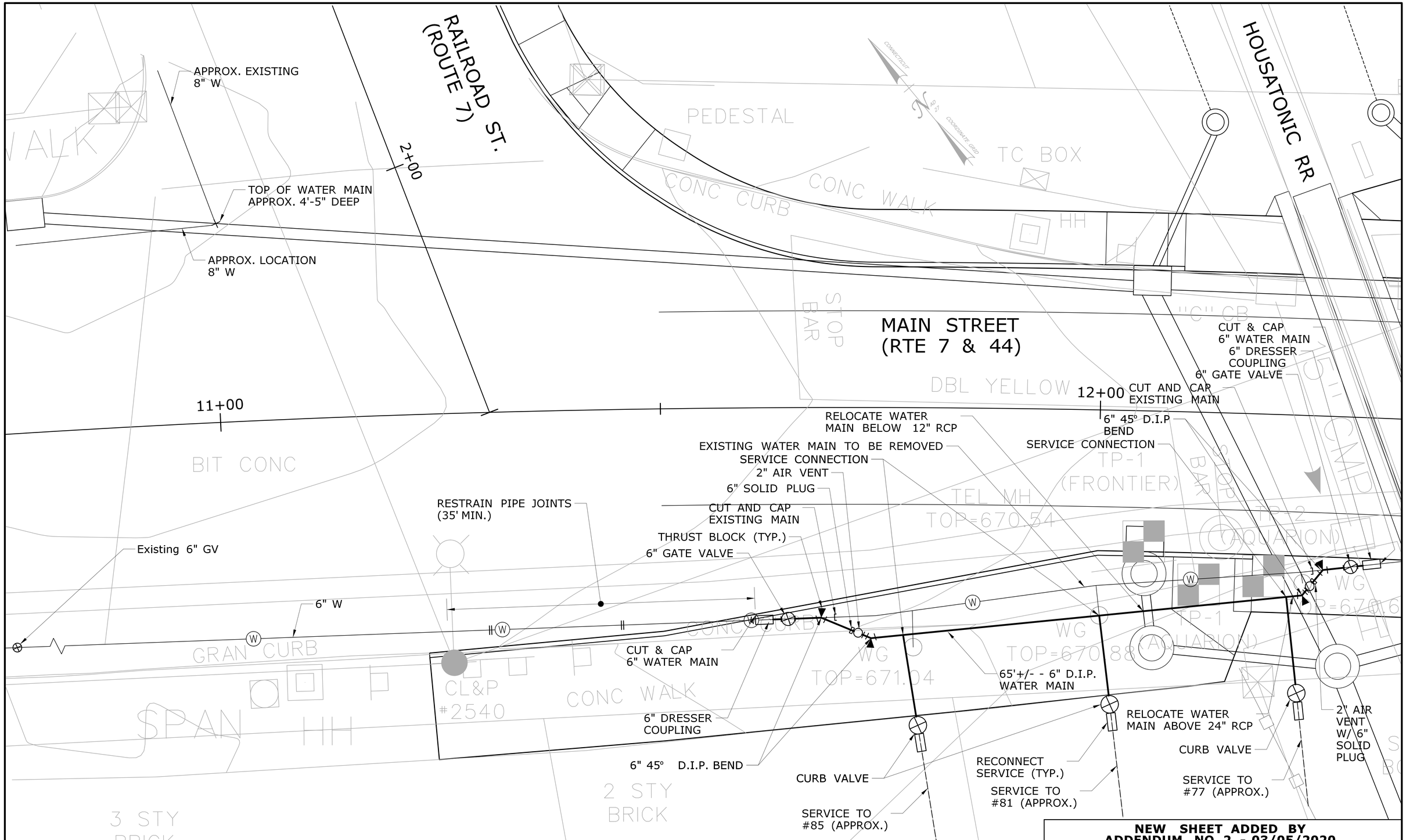

NEW SHEET ADDED BY ADDENDUM NO. 2 - 03/05/2020

REV.	DATE	REVISION DESCRIPTION	SHEET NO.
-	-	-	-
-	-	-	-
-	-	-	-
-	-	-	-
-	-	-	-
-	-	-	-

THE INFORMATION, INCLUDING ESTIMATED QUANTITIES OF WORK, SHOWN ON THESE SHEETS IS BASED ON LIMITED INVESTIGATIONS BY THE STATE AND IS IN NO WAY WARRANTED TO INDICATE THE CONDITIONS OF ACTUAL QUANTITIES OF WORK WHICH WILL BE REQUIRED.

Plotted Date: 3/9/2020

DESIGNER/DRAFTER: **D.B.H./ M.P.**
CHECKED BY: **R.J.N.**
SCALE IN FEET
0 5 10
SCALE 1"=5'

STATE OF CONNECTICUT
DEPARTMENT OF TRANSPORTATION

Filename: ...\AWC-03_HW_MSH_99-114-115_.dgn

SIGNATURE/ BLOCK:

DESIGNED BY:
LUCHS CONSULTING ENGINEERS, LLC
89 COLONY STREET
MERIDEN, CT 06451

PROJECT TITLE:
RAILROAD-HIGHWAY GRADE CROSSING IMPROVEMENTS
U.S. ROUTES 7&44 (MAIN ST.)

TOWN: **NORTH CANAAN**

DRAWING TITLE: **WATER MAIN RELOCATION PLAN**

PROJECT NO. **99-115**
DRAWING NO. **AWC-03**
SHEET NO. **06.03.A2**

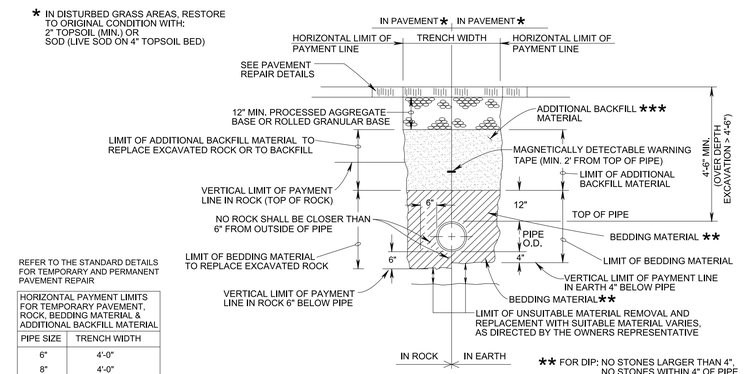

REFER TO THE STANDARD DETAILS FOR TEMPORARY AND PERMANENT PAVEMENT REPAIR

HORIZONTAL PAYMENT LIMITS FOR TEMPORARY PAVEMENT, ROCK, BEDDING MATERIAL & ADDITIONAL BACKFILL MATERIAL	
PIPE SIZE	TRENCH WIDTH
6"	4'-0"
8"	4'-0"
12"	4'-0"
16"	4'-0"
20"	5'-0"
24"	5'-0"
30"	6'-0"
36"	6'-0"

NOTE: IF TRENCH BOXES ARE USED ADD 2' TO ALL TRENCH WIDTHS

SD-1 TYPICAL TRENCH DETAIL
NOT TO SCALE

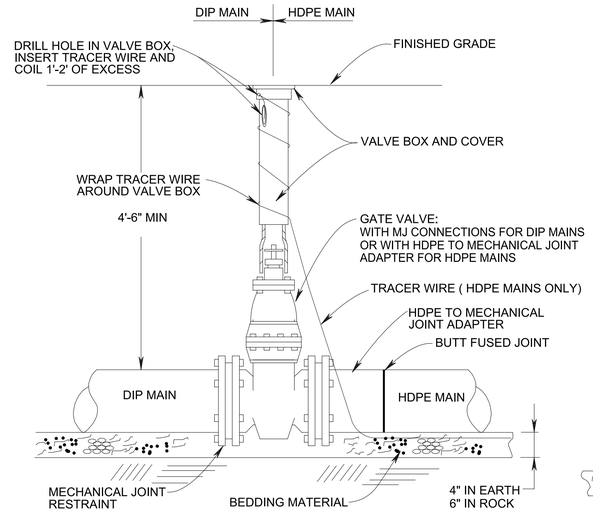

NOTE: ONLY INSTALLED ON MAINS 8" AND SMALLER

NOTE: FOR CONTINUOUS HDPE MAINS, INSTALL TRACER WIRE UNDER ALL VALVES AND FITTINGS. FOR TERMINATION POINTS, INSTALL TRACER WIRE AROUND VALVE BOXES AS SHOWN ABOVE.

SD-2 GATE VALVE
NOT TO SCALE

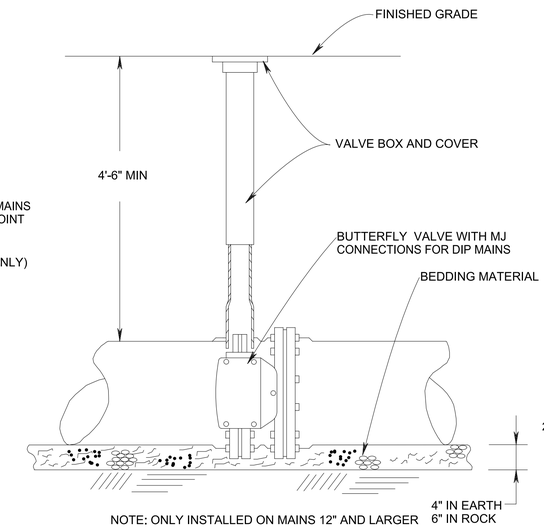

NOTE: ONLY INSTALLED ON MAINS 12" AND LARGER

SD-3 BUTTERFLY VALVE
NOT TO SCALE

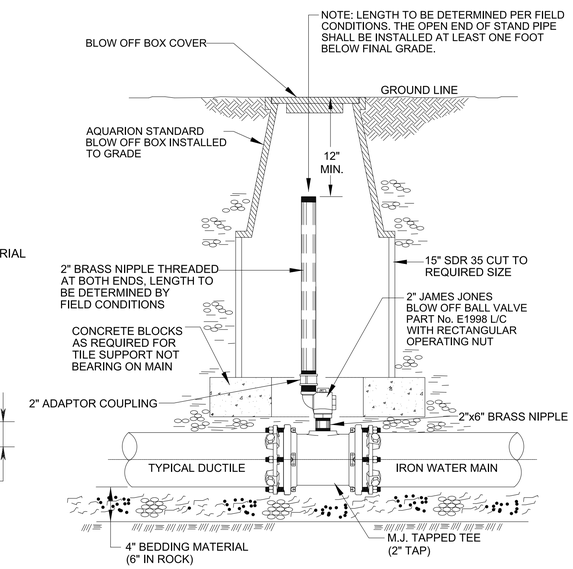

SD-4 ON LINE AIR VENT/BLOW-OFF (DIP)
NOT TO SCALE

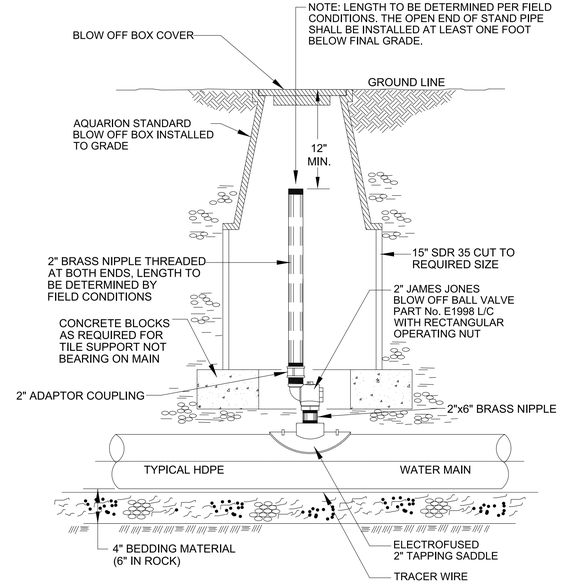

SD-5 ON LINE AIR VENT/BLOW-OFF (HDPE)
NOT TO SCALE

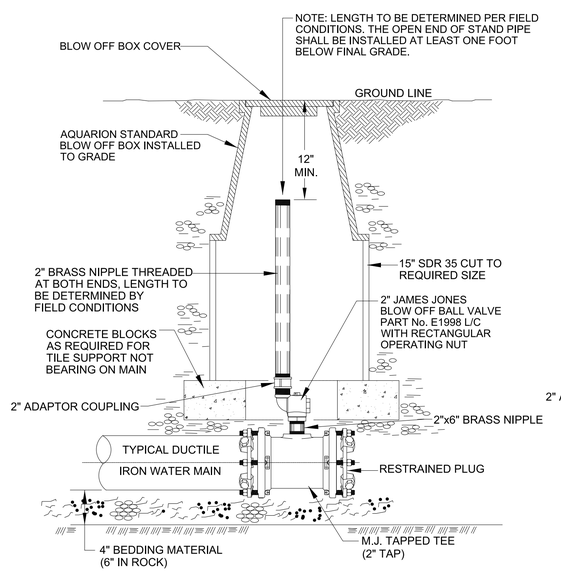

SD-6 BLOW-OFF @ DEAD END (DIP)
NOT TO SCALE

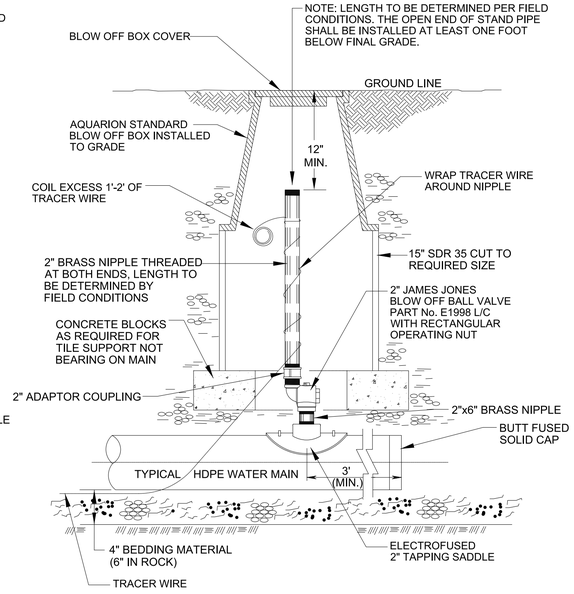

SD-7 BLOW-OFF @ DEAD END (HDPE)
NOT TO SCALE

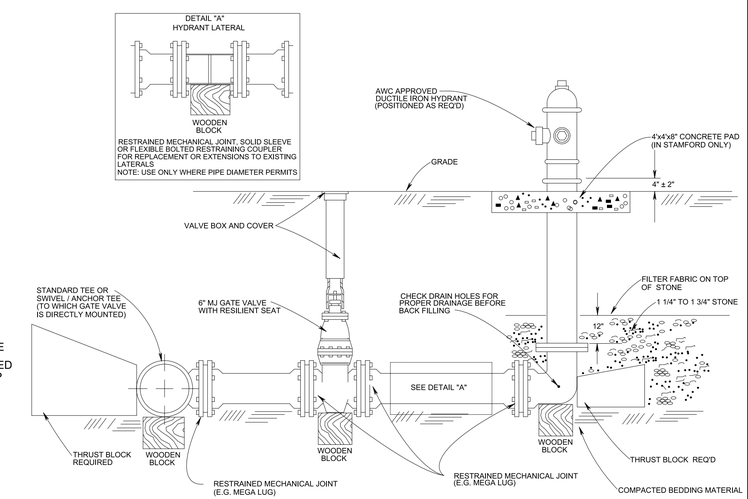

SD-8 HYDRANT ASSEMBLY (DIP)
NOT TO SCALE

NEW SHEET ADDED BY ADDENDUM NO. 2 - 03/05/2020

REV.	DATE	REVISION DESCRIPTION	SHEET NO.
-	-	-	-
-	-	-	-
-	-	-	-
-	-	-	-
-	-	-	-
-	-	-	-

Luchs CONSULTING ENGINEERS

Plotted Date: 3/9/2020

DESIGNER/DRAFTER: DBH

CHECKED BY: XXX

SCALE AS NOTED

AQUARION

Filename: ...\AWC-04_WaterDetail01.dgn

DATE: 5/25/17

SIGNATURE/BLOCK:

DESIGNED BY:

LUCHS CONSULTING ENGINEERS, LLC
89 COLONY STREET
MERIDEN, CT 06451

STATE OF CONNECTICUT — JOHN E. LUCHS — No. 18828 — LICENSED PROFESSIONAL ENGINEER

PROJECT TITLE:

RAILROAD-HIGHWAY GRADE CROSSING IMPROVEMENTS U.S. ROUTES 7&44 (MAIN ST.)

TOWN: **NORTH CANAAN**

DRAWING TITLE: **AQUARION WATER COMPANY STANDARD DETAILS 1**

PROJECT NO. **99-115**

DRAWING NO. **AWC-04**

SHEET NO. **06.04.A2**

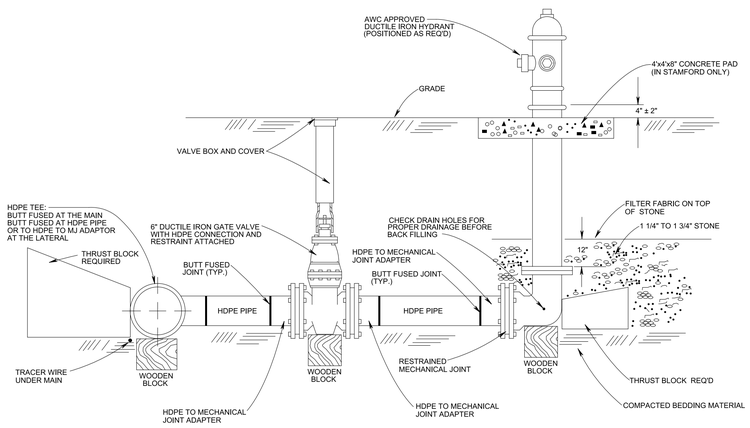

SD-9 HYDRANT ASSEMBLY (HDPE)
NOT TO SCALE

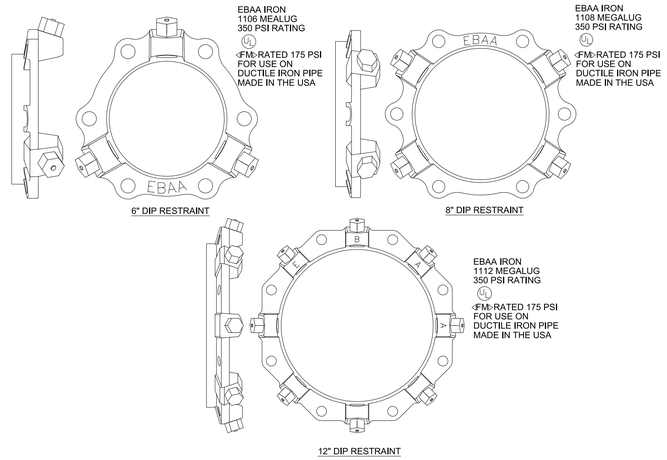

SD-10 DUCTILE IRON PIPE RESTRAINTS
NOT TO SCALE

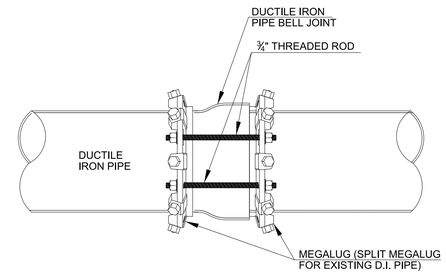

SD-10a RESTRAINT FOR DUCTILE IRON JOINT
NOT TO SCALE

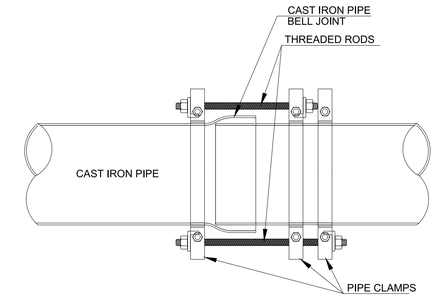

SD-10b RESTRAINT FOR CAST IRON JOINT
NOT TO SCALE

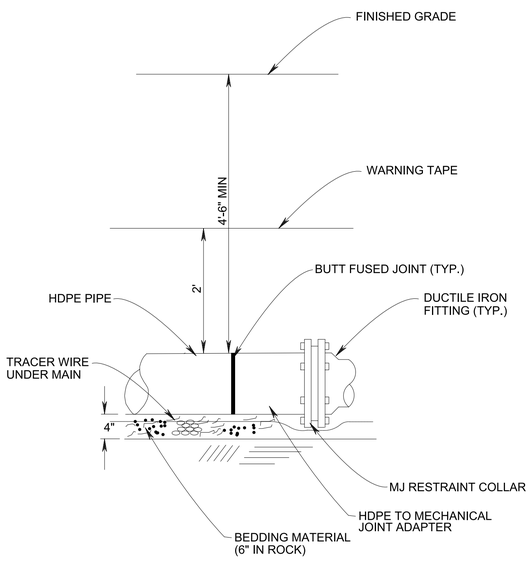

SD-11 HDPE TO MECHANICAL JOINT ADAPTOR
NOT TO SCALE

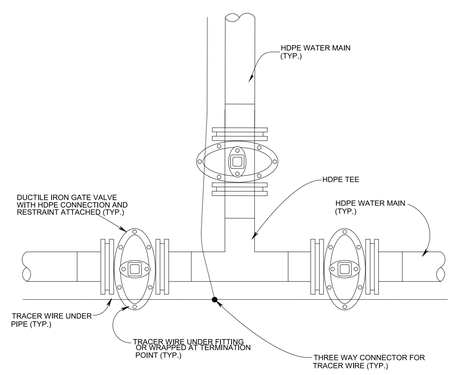

SD-12 TRACER WIRE
NOT TO SCALE

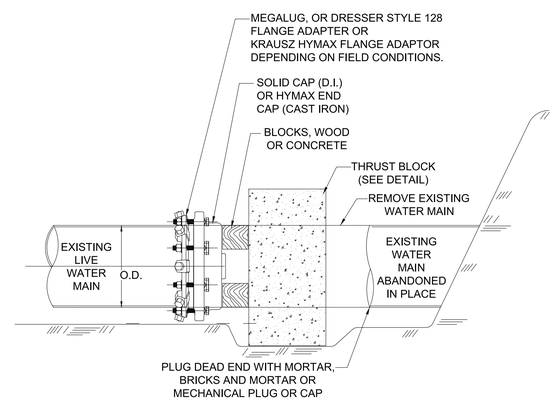

SD-13a CUT AND CAP WATER MAIN
NOT TO SCALE

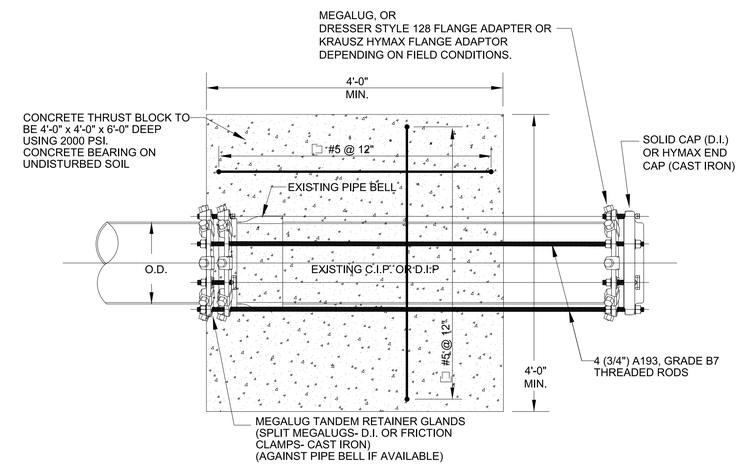

SD-13b CONCRETE THRUST BLOCK WITH PERMANENT END CAP
NOT TO SCALE

NEW SHEET ADDED BY ADDENDUM NO. 2 - 03/05/2020

REV.	DATE	REVISION DESCRIPTION	SHEET NO.
-	-	-	-
-	-	-	-
-	-	-	-
-	-	-	-
-	-	-	-
-	-	-	-

Luchs CONSULTING ENGINEERS
Plotted Date: 3/9/2020

DESIGNER/DRAFTER: DBH
CHECKED BY: XXX
SCALE AS NOTED

AQUARION
Filename: ...\AWC-05..WaterDetail02.dgn
DATE: 5/25/17

SIGNATURE/ BLOCK:
DESIGNED BY:
LUCHS CONSULTING ENGINEERS, LLC
89 COLONY STREET
MERIDEN, CT 06451

PROJECT TITLE:
RAILROAD-HIGHWAY GRADE CROSSING IMPROVEMENTS U.S. ROUTES 7&44 (MAIN ST.)

TOWN: **NORTH CANAAN**
DRAWING TITLE: **AQUARION WATER COMPANY STANDARD DETAILS 2**

PROJECT NO. **99-115**
DRAWING NO. **AWC-05**
SHEET NO. **06.05.A2**

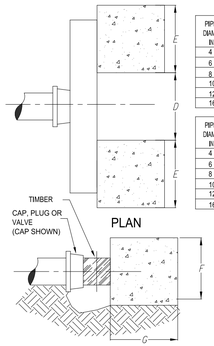

PIPE DIAM. IN	BLOCK DIMENSIONS E IN	F IN	G IN	CONCRETE VOLUME CU. YD.
4	NONE REQUIRED			
6	12	12	12	0.07
8	16	16	16	0.18
10	20	20	20	0.34
12	24	24	24	0.59
16	32	32	32	1.40

PIPE DIAM. IN	TIMBER NO. BEAMS	NOM. SIZE	LENGTH IN	CLEARANCE D IN.
4	NONE REQUIRED			
6	1	6"x8"	34	18
8	1	8"x8"	42	20
10	1	10"x10"	48	22
12	1	12"x12"	56	24
16	2	10"x10"	72	30

NOTES:
1. 2500 psi CONCRETE TO BE USED
2. BLOCK DIMENSIONS ARE BASED UPON SOIL BEARING PRESSURE OF 2000 psi AND WATER PRESSURE OF 150 psi. WHERE SOIL BEARING IS LESS OR WATER PRESSURE IS GREATER, A SPECIAL DESIGN WILL BE REQUIRED.
3. TIMBER TO BE DOUGLAS FIR CONSTRUCTION GRADE OR BETTER HORIZONTAL SHEAR 120 psi.
4. PROVIDE TAMPED BACKFILL AND/OR BLOCKING TO SUPPORT TIMBER.

SD-13 THRUST BLOCKS
AT DEAD ENDS
NOT TO SCALE

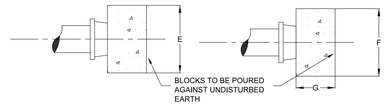

NOTES:
1. 2500 psi CONCRETE TO BE USED
2. BLOCK DIMENSIONS ARE BASED UPON SOIL BEARING PRESSURE OF 2000 psi AND WATER PRESSURE OF 150 psi. WHERE SOIL BEARING IS LESS OR WATER PRESSURE IS GREATER, A SPECIAL DESIGN WILL BE REQUIRED.
3. FOR USE ON ABANDONED LINES AND DEAD ENDS WHERE NO EXTENSION IS CONTEMPLATED.

PIPE DIAM. IN	BLOCK DIMENSIONS E IN	F IN	G IN	CONCRETE VOLUME CU. YD.
6	20	16	12	0.09
8	28	20	12	0.15
10	30	24	12	0.19
12	42	30	14	0.40
16	52	42	18	0.85

CAPS, PLUGS AND VALVES

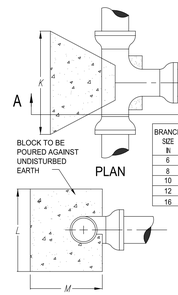

BRANCH SIZE IN	BLOCK DIMENSIONS K IN	L IN	M IN	CONCRETE VOLUME CU. YD.
6	18	16	12	0.09
8	30	18	12	1.15
10	42	20	12	0.24
12	50	24	16	0.42
16	60	36	24	1.12

NOTES:
1. 2500 psi CONCRETE TO BE USED
2. BLOCK DIMENSIONS ARE BASED UPON SOIL BEARING PRESSURE OF 2000 psi AND WATER PRESSURE OF 150 psi. WHERE SOIL BEARING IS LESS OR WATER PRESSURE IS GREATER, A SPECIAL DESIGN WILL BE REQUIRED.

TEES

SD-14 THRUST BLOCKS
AT TEES, CAPS, PLUGS & VALVES
NOT TO SCALE

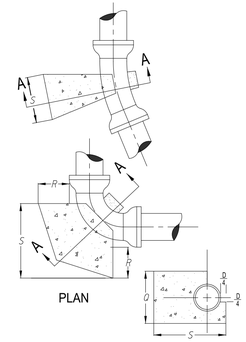

PIPE DIAM. IN	BLOCK DIMENSIONS BEND	S IN.	Q IN.	R IN.	CONCRETE VOLUME CU. YD.
16	90	48	48	48	2.37
	45	48	34	20	0.70
	22 1/2	42	20	18	0.32
	11 1/4				SEE NOTE 3
12	90	36	36	36	1.00
	45	36	24	18	0.33
	22 1/2	28	18	12	0.13
	11 1/4				SEE NOTE 3
10	90	30	30	30	0.60
	45	30	20	18	0.23
	22 1/2	22	16	12	0.09
	11 1/4				SEE NOTE 3
8	90	24	24	24	0.30
	45	24	16	12	0.20
	22 1/2	18	12	12	0.11
	11 1/4				SEE NOTE 3
6	90	18	18	18	0.25
	45	18	12	12	0.11
	22 1/2	12	12	12	0.07
	11 1/4				SEE NOTE 3

NOTES:
1. 2500 psi CONCRETE TO BE USED
2. BLOCK DIMENSIONS ARE BASED UPON SOIL BEARING PRESSURE OF 2000 psi AND WATER PRESSURE OF 150 psi. WHERE SOIL BEARING IS LESS OR WATER PRESSURE IS GREATER, A SPECIAL DESIGN WILL BE REQUIRED.
3. SEE SAG VERTICAL (ABOVE)

SD-15 THRUST BLOCKS
AT HORIZONTAL BENDS
NOT TO SCALE

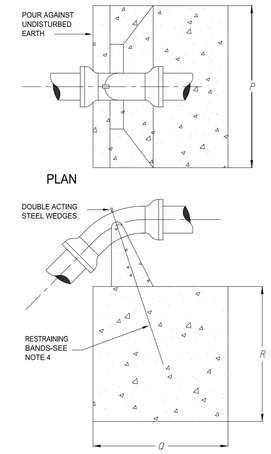

NOTE:
IN ADDITION TO THE CONCRETE THRUST BLOCKS, ALL FITTINGS TO BE TIED TOGETHER WITH 3/4" GALVANIZED THREADED RODS, AND ANY OTHER SPECIALS AS DIRECTED BY THE WATER COMPANY.

PIPE DIAM. IN	BLOCK DIMENSIONS BEND	P IN.	Q IN.	R IN.	CONCRETE VOLUME CU. YD.
16	45	72	60	56	5.2
	22 1/2	60	48	44	2.7
	11 1/4	60	36	36	1.7
12	45	60	48	48	3.0
	22 1/2	42	42	40	1.5
	11 1/4	34	34	34	0.84
10	45	54	42	42	2.0
	22 1/2	36	36	36	1.0
	11 1/4	30	30	30	0.58
8	45	48	36	36	1.3
	22 1/2	32	32	32	0.71
	11 1/4	26	26	26	0.38
6	45	42	30	28	0.76
	22 1/2	26	26	26	0.38
	11 1/4	24	24	24	0.30

NOTES:
1. 2500 psi CONCRETE TO BE USED
2. BLOCK DIMENSIONS ARE BASED UPON SOIL BEARING PRESSURE OF 2000 psi AND WATER PRESSURE OF 150 psi. WHERE SOIL BEARING IS LESS OR WATER PRESSURE IS GREATER, A SPECIAL DESIGN WILL BE REQUIRED.
3. WHERE 90° CREST VERTICAL BEND IS REQUIRED APPROVAL MUST FIRST BE OBTAINED FROM THE ENGINEER. A SPECIAL DESIGN WILL BE REQUIRED.
4. 2 - # 6 REINFORCING RODS REQUIRED FOR 16" 45° BEND; 1 - # 6 REINFORCING ROD REQUIRED FOR ALL OTHER BENDS. EXPOSED BARS TO BE PROVIDED WITH PROTECTIVE COATING.

SD-16 THRUST BLOCKS
AT CREST VERTICAL BENDS
NOT TO SCALE

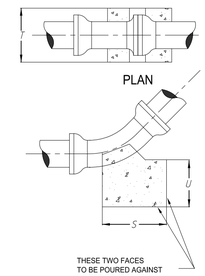

PIPE DIAM. IN	BLOCK DIMENSIONS BEND	S IN.	T IN.	U IN.	CONCRETE VOLUME CU. YD.
16	90	48	48	48	2.40
	45	48	34	20	0.70
	22 1/2	42	20	18	0.35
	11 1/4				SEE NOTE 3
12	90	36	36	36	1.00
	45	36	24	18	0.34
	22 1/2	28	18	12	0.13
	11 1/4				SEE NOTE 3
10	90	30	30	30	0.60
	45	30	20	18	0.23
	22 1/2	22	16	12	0.10
	11 1/4				SEE NOTE 3
8	90	24	24	24	0.30
	45	24	16	12	0.10
	22 1/2	18	12	12	0.06
	11 1/4				SEE NOTE 3
6	90	18	18	18	0.13
	45	18	12	12	0.06
	22 1/2	12	12	12	0.04
	11 1/4				SEE NOTE 3

NOTES:
1. 2500 psi CONCRETE TO BE USED
2. BLOCK DIMENSIONS ARE BASED UPON SOIL BEARING PRESSURE OF 2000 psi AND WATER PRESSURE OF 150 psi. WHERE SOIL BEARING IS LESS OR WATER PRESSURE IS GREATER, A SPECIAL DESIGN WILL BE REQUIRED.
3. BEND TO BE SET AGAINST UNDISTURBED EARTH. BACKFILL TO BE FIRMLY TAMPED. OR BLOCK TO BE FURNISHED AS DIRECTED BY THE ENGINEER.

SD-17 THRUST BLOCKS
AT SAG VERTICALBENDS
NOT TO SCALE

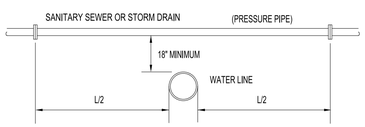

NOTE:
WHERE WATER LINE PASSES BENEATH SEWER LINE OR STORM DRAIN, THE JOINTS OF THE PIPE SHALL BE A MIN. OF 10' FROM THE POINT OF CROSSING.

CROSSING OF WATER LINE UNDER SANITARY SEWER OR STORM DRAIN

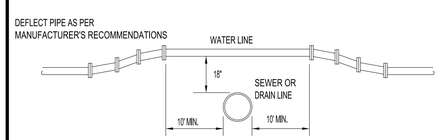

NOTE:
FOR ANY CONDITIONS OTHER THAN SHOWN ABOVE THE FOLLOWING REQUIREMENTS SHALL BE MET. THE JOINTS OF THE SANITARY SEWER OR STORM DRAIN SHALL BE A MINIMUM OF 10' FROM THE POINT OF CROSSING.

CROSSING OF WATER LINE OVER SANITARY SEWER OR STORM DRAIN

SD-18 PIPE INSTALLATION
CROSSING SANITARY/STORM SEWER
NOT TO SCALE

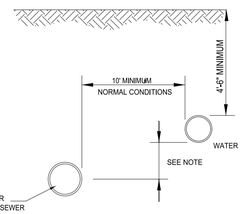

NOTE:
WHERE A 10' HORIZONTAL SEPARATION CANNOT BE OBTAINED DUE TO FIELD CONDITIONS, THE VERTICAL CLEAR DISTANCE SHALL BE A MINIMUM OF 18" HOWEVER, AN EXCEPTION TO THE 10' MINIMUM HORIZONTAL SEPARATION REQUIRES SEPARATE APPROVAL OF THE APPROPRIATE COUNTY HEALTH DEPT.

SEPARATION OF WATER MAINS AND SEWERS - PARALLEL INSTALLATION

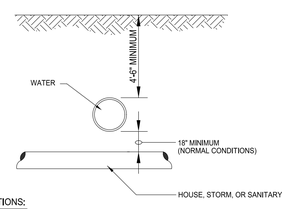

UNUSUAL CONDITIONS:
WATER MAINS PASSING UNDER SEWERS SHALL HAVE A VERTICAL CLEARANCE OF 18" MIN. BETWEEN THE SEWER AND WATER MAIN AND THE SEWER SHALL BE SUPPORTED AS DIRECTED BY THE OWNERS REPRESENTATIVE. TO THE EXTENT FEASIBLE, JOINTS IN THE WATER MAIN SHALL BE KEPT AS FAR AS POSSIBLE FROM THE SEWER. WHERE AN 18" SEPARATION CANNOT BE OBTAINED DUE TO FIELD CONDITIONS, SEPARATE APPROVAL OF THE HEALTH DEPARTMENT SHALL BE REQUIRED.

SEPARATION OF WATER MAINS AND SEWER CROSSINGS

SD-19 PIPE INSTALLATION
SEPARATION OF WATER & SEWER CROSSINGS
NOT TO SCALE

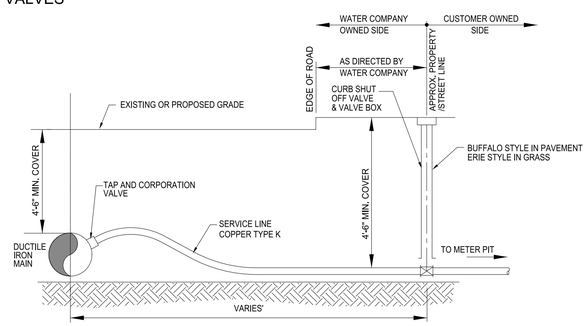

DUCTILE IRON PIPE

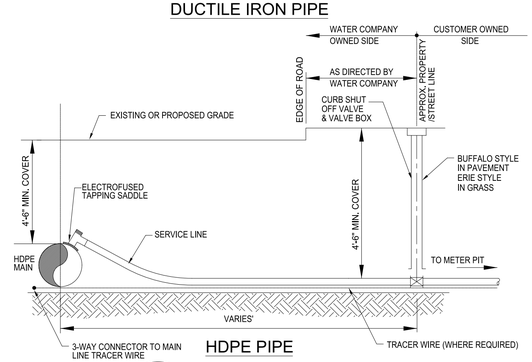

HDPE PIPE

SD-20 PIPE INSTALLATION
WATER SERVICE LINE
NOT TO SCALE

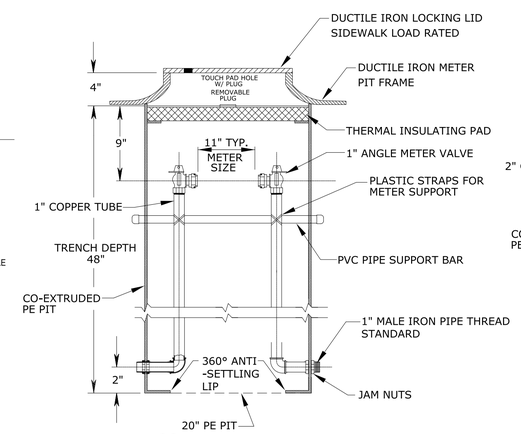

SD-21 STANDARD 1" METER PIT
NOT TO SCALE

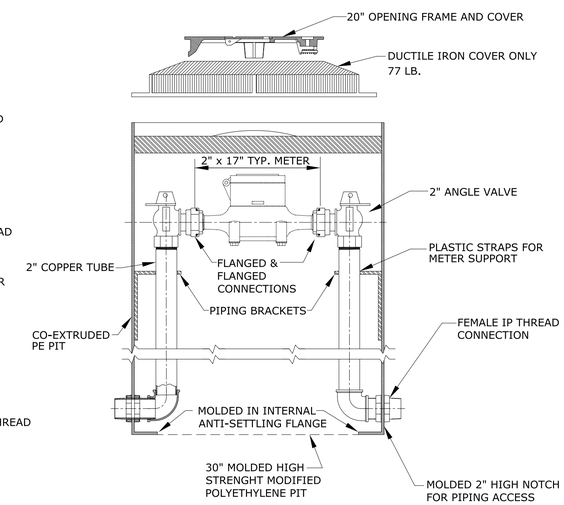

SD-22 STANDARD 2" METER PIT
NOT TO SCALE

NEW SHEET ADDED BY ADDENDUM NO. 2 - 03/05/2020

REV.	DATE	REVISION DESCRIPTION	SHEET NO.
-	-	-	-
-	-	-	-
-	-	-	-
-	-	-	-
-	-	-	-
-	-	-	-

Luchs CONSULTING ENGINEERS
Plotted Date: 3/9/2020

DESIGNER/DRAFTER: DBH
CHECKED BY: XXX
SCALE AS NOTED

AQUARION
Filename: ...\AWC-06..WaterDetail03.dgn
DATE: 5/25/17

SIGNATURE/BLOCK:
DESIGNED BY:
LUCHS CONSULTING ENGINEERS, LLC
69 COLONY STREET
MERIDEN, CT 06451

PROJECT TITLE:
RAILROAD-HIGHWAY GRADE CROSSING IMPROVEMENTS U.S. ROUTES 7&44 (MAIN ST.)

TOWN: **NORTH CANAAN**
DRAWING TITLE: **AQUARION WATER COMPANY STANDARD DETAILS 3**

PROJECT NO. **99-115**
DRAWING NO. **AWC-06**
SHEET NO. **06.06.A2**

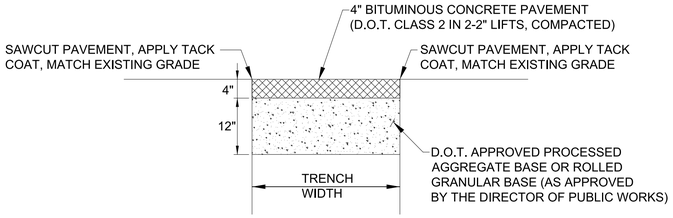

SD-31 TEMPORARY PAVEMENT REPAIR
TOWN ROAD
NOT TO SCALE

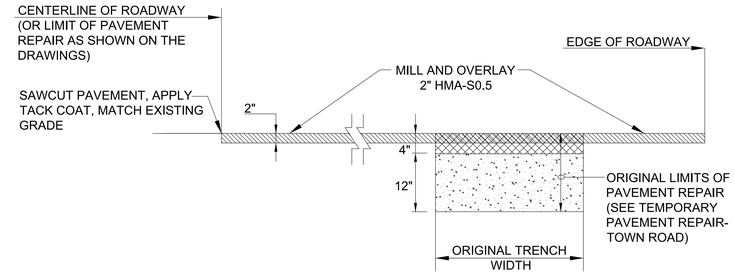

SD-32 PERMANENT PAVEMENT REPAIR
TOWN ROAD
NOT TO SCALE

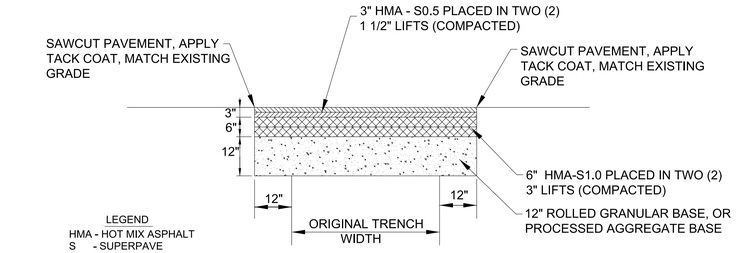

LEGEND
HMA - HOT MIX ASPHALT
S - SUPERPAVE
.5 - 1/2" STONE SIZE
1.0 - 1 1/2" STONE SIZE

REFER TO FORM 816-2004, SECTION 4.06 AND CTDOT HIGHWAY DESIGN MANUAL

SD-33 PERMANENT PAVEMENT REPAIR
STATE ROAD - TRENCH ONLY
NOT TO SCALE

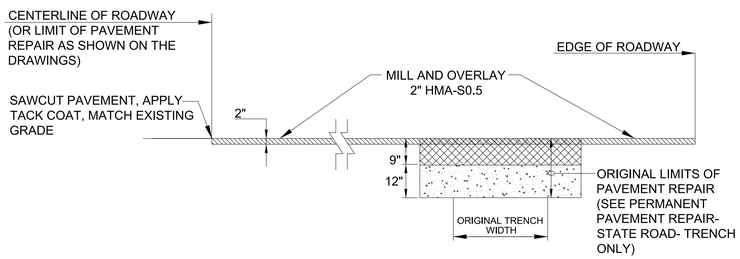

SD-34 PERMANENT PAVEMENT REPAIR
STATE ROAD
NOT TO SCALE

816 CONSTRUCTION NOTES

1. REMOVAL OF PAVEMENT MARKINGS ALONG STATE ROADWAYS SHALL BE COMPLETED BY A NON-DESTRUCTIVE METHOD IN COMPLIANCE WITH THE STATE OF CONNECTICUT DEPARTMENT OF TRANSPORTATION STANDARD SPECIFICATIONS FOR ROADS, BRIDGE, AND INCIDENTAL CONSTRUCTION FORM 816 SECTION 12.11 AS REVISED.
2. NEW PAVEMENT MARKINGS SHALL BE PAINTED WITH EPOXY RESIN PAINT IN COMPLIANCE WITH THE STATE OF CONNECTICUT DEPARTMENT OF TRANSPORTATION STANDARD SPECIFICATIONS FOR ROADS, BRIDGE, AND INCIDENTAL CONSTRUCTION FORM 816 SECTION 12.10 AS REVISED.
3. NEW SIGN MATERIAL AND SHEETING SHALL BE MADE OF REFLECTIVE MATERIAL IN COMPLIANCE WITH THE STATE OF CONNECTICUT DEPARTMENT OF TRANSPORTATION STANDARD SPECIFICATIONS FOR ROADS, BRIDGE, AND INCIDENTAL CONSTRUCTION FORM 816 SECTION 12.08 AS REVISED. TYPE 1 REFLECTIVE SHEETING SHALL BE USED FOR SIGNS WITH WHITE BACKGROUND, TYPE 3 REFLECTIVE SHEETING SHALL BE USED FOR SIGNS WITH COLORED BACKGROUND EXCEPT FOR SIGNS WITH RED BACKGROUND THAT SHALL BE TYPE 8 OR 9 REFLECTIVE SHEETING.
4. ALL SIGNS AND PAVEMENT MARKINGS INSTALLED ALONG THE STATE ROAD MUST CONFORM TO THE "MANUAL OF UNIFORM TRAFFIC CONTROL DEVICES," THE LATEST STATE OF CONNECTICUT CATALOG OF SIGNS AND STANDARD AS REVISED.
5. ANY DAMAGE TO THE EXISTING CURB, SIDEWALK OR ANY OTHER HIGHWAY APPURTENANCES DURING THE DEVELOPMENT OF THE PERMITTED SITE WILL BE REPLACED BY THE CONTRACTOR AS DIRECTED BY THE DISTRICT PERMIT SECTION AT NO COST TO THE STATE.
6. ALL WORK WITHIN THE STATE RIGHT OF WAY WILL COMPLY WITH THE STATE OF CONNECTICUT DEPARTMENT OF TRANSPORTATION STANDARD SPECIFICATIONS FOR ROADS, BRIDGE, AND INCIDENTAL CONSTRUCTION FORM 816 WITH THE LATEST SPECIAL PROVISIONS AND TYPICAL STATE STANDARD DETAILS.

SD-35 DOT FORM 816 CONSTRUCTION NOTES
(FOR STATE ROADS ONLY)
NOT TO SCALE

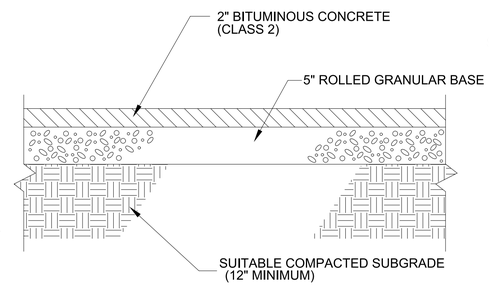

SD-36 BITUMINOUS CONCRETE SIDEWALK & DRIVEWAY
NOT TO SCALE

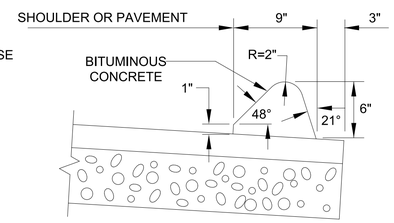

SD-37 BITUMINOUS CONCRETE LIP CURBING
NOT TO SCALE

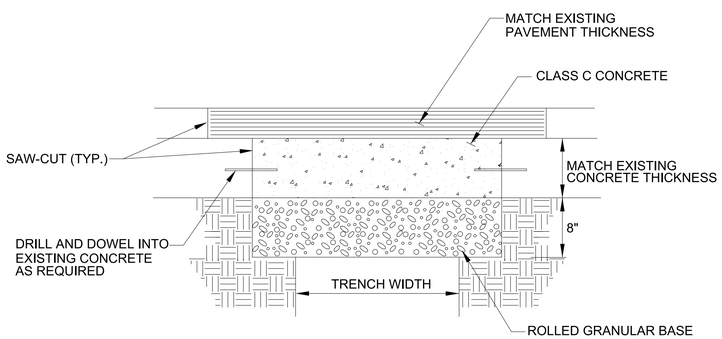

SD-38 RIENFORCED CONCRETE PAVEMENT
NOT TO SCALE

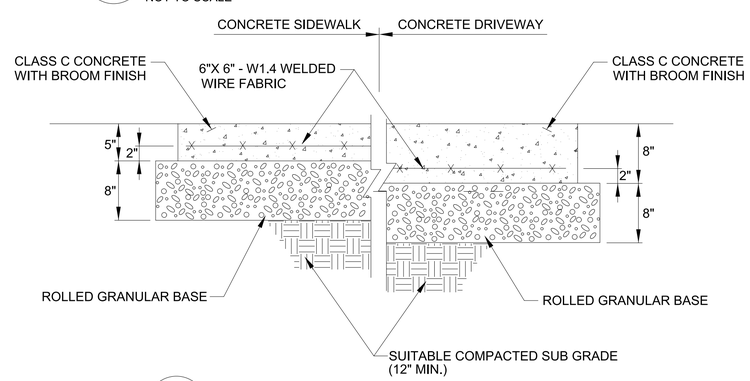

SD-39 CONCRETE SIDEWALK & DRIVEWAY
NOT TO SCALE

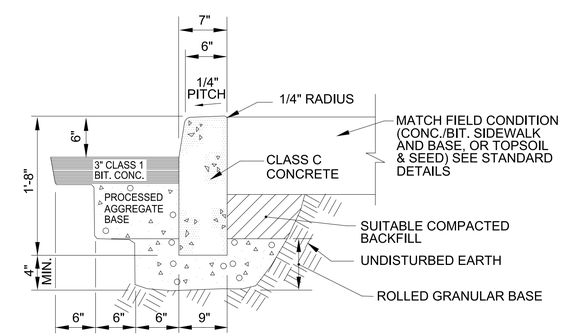

SD-40 CONCRETE CURBING
NOT TO SCALE

NEW SHEET ADDED BY ADDENDUM NO. 2 - 03/05/2020

REV.	DATE	REVISION DESCRIPTION	SHEET NO.
-	-	-	-
-	-	-	-
-	-	-	-
-	-	-	-
-	-	-	-
-	-	-	-

Luchs CONSULTING ENGINEERS
Plotted Date: 3/9/2020

DESIGNER/DRAFTER: DBH
CHECKED BY: XXX
SCALE AS NOTED

AQUARION
Filename: ..\AWC-07_WaterDetail05.dgn
DATE: 5/25/17

SIGNATURE/BLOCK:
DESIGNED BY:
LUCHS CONSULTING ENGINEERS, LLC
89 COLONY STREET
MERIDEN, CT 06451

PROJECT TITLE:
RAILROAD-HIGHWAY GRADE CROSSING IMPROVEMENTS U.S. ROUTES 7&44 (MAIN ST.)

TOWN: **NORTH CANAAN**
DRAWING TITLE: **AQUARION WATER COMPANY STANDARD DETAILS 5**

PROJECT NO. **99-115**
DRAWING NO. **AWC-07**
SHEET NO. **06.07.A2**