06 - HIGHWAY DESIGN

INDEX OF DRAWINGS

DRAWING NUMBER	DRAWING TITLE	DRAWING NUMBER	DRAWING TITLE
HWY-01	HIGHWAY DESIGN INDEX OF DRAWINGS		
HWY-02	CHURCH HILL RD HIGHWAY PLAN		
HWY-03	CHURCH HILL RD GUIDERAIL DETAIL		
HWY-04	RT 37 & RT 39 HIGHWAY PLAN		
HWY-05	RT 37 & 39 GUIDERAIL DETAIL		

THE DESIGN APPEARS TO CONFORM TO APPLICABLE CRITERIA. APPROVAL IS NOT TO BE CONSTRUED TO MEAN THAT ALL ASPECTS OF THE DESIGN HAVE BEEN PERSONALLY CHECKED BY THE UNDERSIGNED.

Michael S. Cherpak, P.E.
FOR
2020.02.11 08:26:04-05'00'

TRANSPORTATION PRINCIPAL ENGINEER

REV.	DATE	REVISION DESCRIPTION	SHEET NO.

THE INFORMATION, INCLUDING ESTIMATED QUANTITIES OF WORK, SHOWN ON THESE SHEETS IS BASED ON LIMITED INVESTIGATIONS BY THE STATE AND IS IN NO WAY WARRANTED TO INDICATE THE CONDITIONS OF ACTUAL QUANTITIES OF WORK WHICH WILL BE REQUIRED.

Plotted Date: 2/4/2020

DESIGNER/DRAFTER: SMT

CHECKED BY: NAI

STATE OF CONNECTICUT
DEPARTMENT OF TRANSPORTATION

Filename: ...\HW_MSH_0174_0418_PLN-01.dgn

SIGNATURE/ BLOCK:

OFFICE OF ENGINEERING

APPROVED BY:

PROJECT TITLE:

INSTALLATION AND REVISIONS OF TRAFFIC CONTROL SIGNALS IN DISTRICT 4

TOWN:

NEWTOWN
NEW FAIRFIELD

DRAWING TITLE:

HIGHWAY DESIGN INDEX OF DRAWINGS

PROJECT NO. 0174-0418

DRAWING NO. HWY-01

SHEET NO. 06.01

GENERAL NOTES:
1. SEE HW-0811 01 "CONCRETE CURBING",
   HW-910 01 "W-BEAM METAL BEAM RAIL HARDWARE
   HW 921 01 "DRIVEWAY RAMPS AND SIDEWALKS"

2. SEE TRAFFIC SIGNAL PLAN NO. 096-216 FOR LOCATION
   OF ALL TRAFFIC SIGNAL EQUIPMENT.

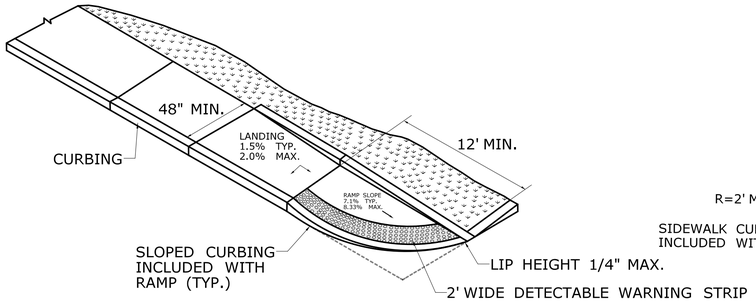

DETAIL A - SIDEWALK TYPE 14
(NOT TO SCALE)

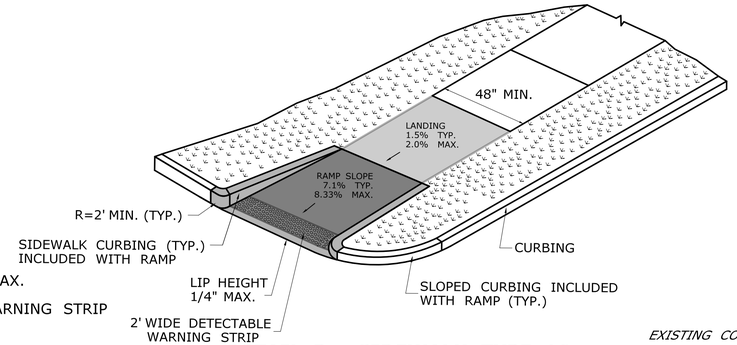

DETAIL B - SIDEWALK TYPE 16
(NOT TO SCALE)

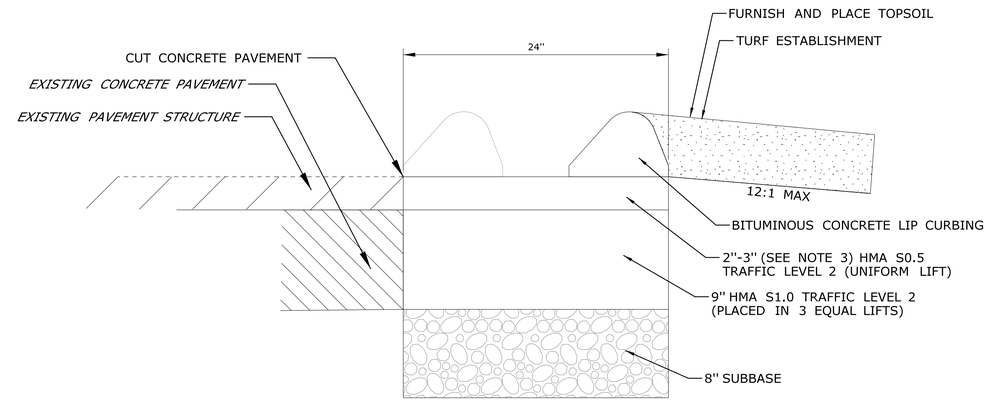

DETAIL C - PAVEMENT COMPOSITION
(NOT TO SCALE)

NOTES:

1. SAWCUT ALONG EXISTING EDGE OF ROAD TO FACILITATE WIDENING OPERATION.
2. CUT AND REMOVE CONCRETE PAVEMENT ENCOUNTERED WITHIN WIDENING AREA. THE CONTRACTOR SHALL PLACE A LAYER OF TACK COAT AGAINST THE EXPOSED CONCRETE AND INSTALL HMA S1.0 TO THE DEPTH SHOWN.
3. THE CONTRACTOR SHALL INSTALL HMA S0.5 TO THE THICKNESS NECCESSARY TO MATCH THE EXISTING BITUMINOUS CONCRETE.

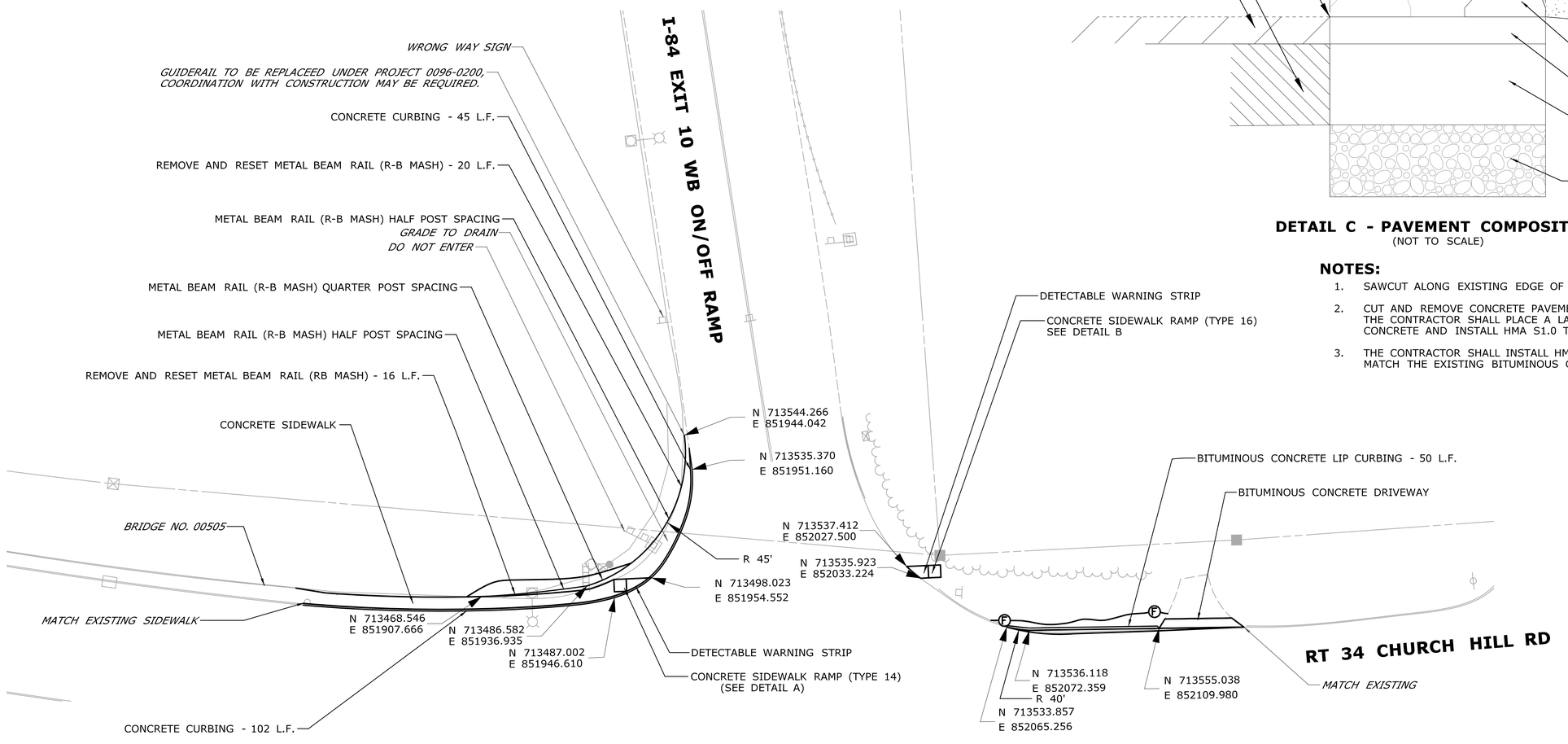

REV.	DATE	REVISION DESCRIPTION	SHEET NO.

THE INFORMATION, INCLUDING ESTIMATED QUANTITIES OF WORK, SHOWN ON THESE SHEETS IS BASED ON LIMITED INVESTIGATIONS BY THE STATE AND IS IN NO WAY WARRANTED TO INDICATE THE CONDITIONS OF ACTUAL QUANTITIES OF WORK WHICH WILL BE REQUIRED.

Plotted Date: 2/4/2020

DESIGNER/DRAFTER: SMT
CHECKED BY: NAI
SCALE IN FEET 0 20 40
SCALE 1"=20'

STATE OF CONNECTICUT
DEPARTMENT OF TRANSPORTATION

Filename: ...\HW_MSH_0174_0418_PLN-02.dgn

SIGNATURE/BLOCK: OFFICE OF ENGINEERING
APPROVED BY: Matthew Nai

PROJECT TITLE: INSTALLATION AND REVISIONS OF TRAFFIC CONTROL SIGNALS IN DISTRICT 4

TOWN: NEWTOWN

DRAWING TITLE: CHURCH HILL RD HIGHWAY PLAN

PROJECT NO. 0174-0418
DRAWING NO. HWY-02
SHEET NO. 06.02

GENERAL NOTES:

1. SEE SHEET HW-910_20 FOR HARDWARE AND W-BEAM DELINEATOR DETAILS.
2. W-BEAM DELINEATOR MAY BE INSTALLED AT POST BOLT CONNECTION TO MAINTAIN APPROPRIATE DELINEATOR SPACING.

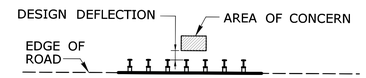

POST SPACING	DESIGN DEFLECTION
STANDARD (6' - 3")	4' - 3"
HALF POST (3' - 1½")	2' - 8"
QUARTER POST (1' - 6¾")	1' - 10"

TABLE 1

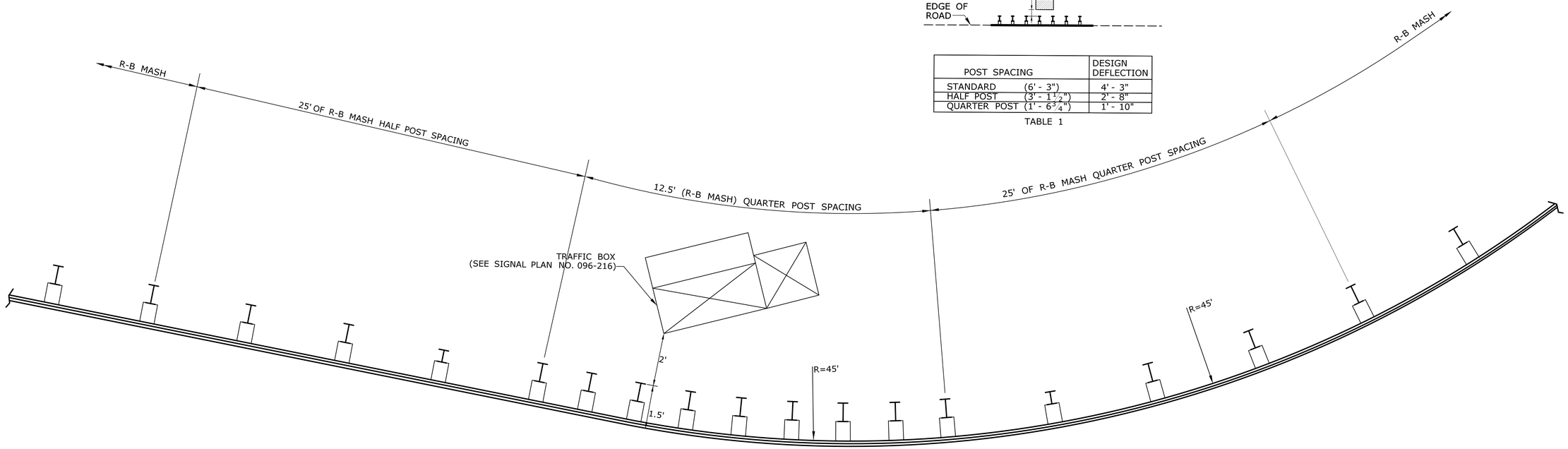

PLAN

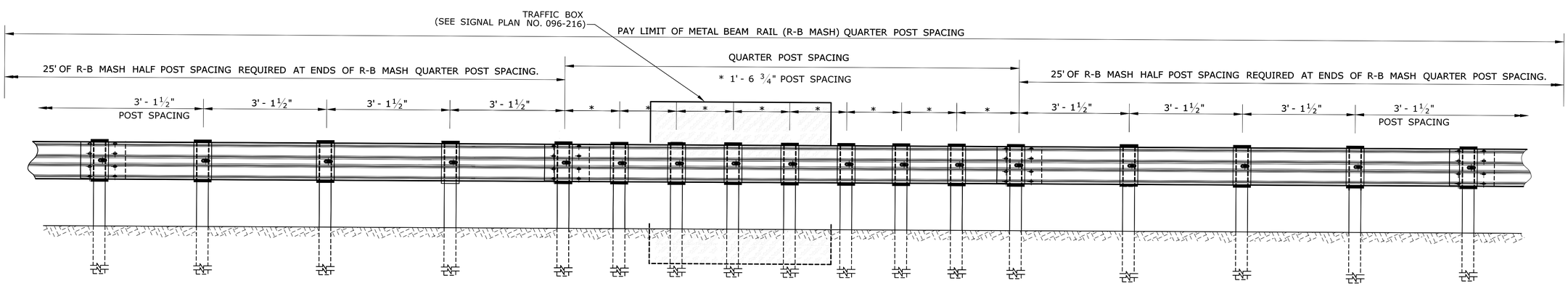

ELEVATION
METAL BEAM RAIL (R-B MASH) HALF POST AND QUARTER POST SPACING

REV.	DATE	REVISION DESCRIPTION	SHEET NO.

THE INFORMATION, INCLUDING ESTIMATED QUANTITIES OF WORK, SHOWN ON THESE SHEETS IS BASED ON LIMITED INVESTIGATIONS BY THE STATE AND IS IN NO WAY WARRANTED TO INDICATE THE CONDITIONS OF ACTUAL QUANTITIES OF WORK WHICH WILL BE REQUIRED.

Plotted Date: 2/4/2020

DESIGNER/DRAFTER: SMT
CHECKED BY: NAI
NOT TO SCALE

STATE OF CONNECTICUT
DEPARTMENT OF TRANSPORTATION

Filename: ..\HW_MSH_0174_0418_PLN-03.dgn

SIGNATURE/BLOCK:
OFFICE OF ENGINEERING
APPROVED BY:

PROJECT TITLE:
INSTALLATION AND REVISIONS OF TRAFFIC CONTROL SIGNALS IN DISTRICT 4

TOWN: NEWTOWN

DRAWING TITLE:
CHURCH HILL RD GUIDERAIL DETAIL

PROJECT NO. 0174-0418
DRAWING NO. HWY-03
SHEET NO. 06.03

GENERAL NOTES:
1. SEE HW-0910 20 "MASH W-BEAM HARDWARE",
   HW-0910 21 "METAL BEAM RAIL (R-B MASH) GUIDERAIL",
   HW-0910 23 "METAL BEAM RAIL (R-B MASH) HALF AND QUARTER POST SPACING",

2. REPLACE ALL DAMAGED POSTS AND RAIL ELEMENTS WITH STANDARD MASH W-BEAM HARDWARE.

3. SEE TRAFFIC SIGNAL PLAN NO. 090-203 FOR LOCATION OF ALL TRAFFIC SIGNAL EQUIPMENT.

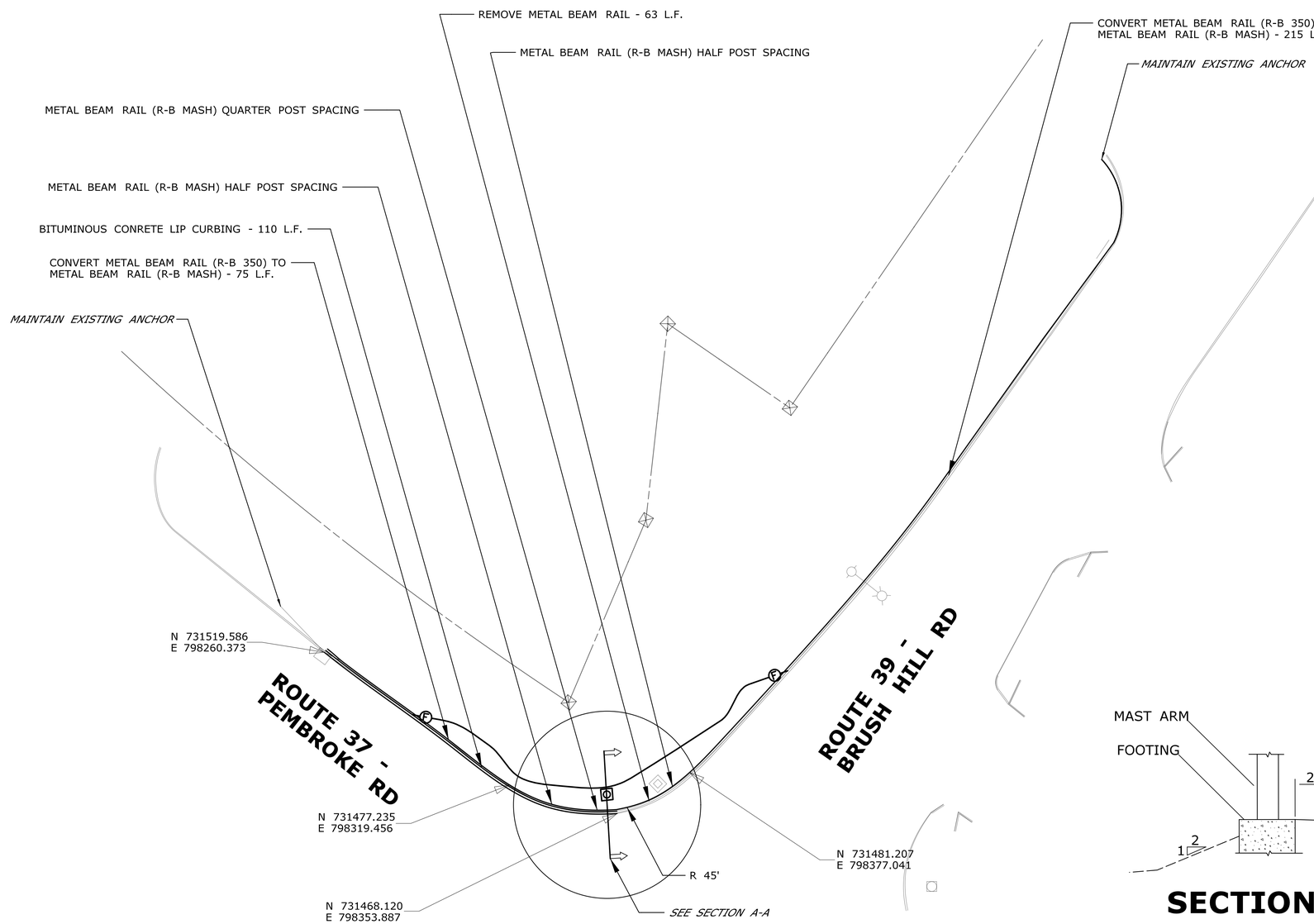

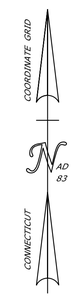

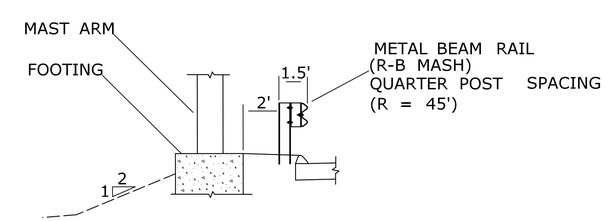

SECTION A-A

NOT TO SCALE

SEE HWY-05 FOR GUIDERAIL DETAIL

REV.	DATE	REVISION DESCRIPTION	SHEET NO.

THE INFORMATION, INCLUDING ESTIMATED QUANTITIES OF WORK, SHOWN ON THESE SHEETS IS BASED ON LIMITED INVESTIGATIONS BY THE STATE AND IS IN NO WAY WARRANTED TO INDICATE THE CONDITIONS OF ACTUAL QUANTITIES OF WORK WHICH WILL BE REQUIRED.

Plotted Date: 2/4/2020

DESIGNER/DRAFTER: SMT
CHECKED BY: NAI
SCALE IN FEET 0 20 40
SCALE 1"=20'

STATE OF CONNECTICUT
DEPARTMENT OF TRANSPORTATION

Filename: ...\HW_MSH_0174_0418_PLN-04.dgn

SIGNATURE/ BLOCK: **OFFICE OF ENGINEERING**
APPROVED BY: Matthew Vail

PROJECT TITLE: **INSTALLATION AND REVISIONS OF TRAFFIC CONTROL SIGNALS IN DISTRICT 4**

TOWN: **NEW FAIRFIELD**

DRAWING TITLE: **RT 37 & RT 39 HIGHWAY PLAN**

PROJECT NO. **0174-0418**
DRAWING NO. **HWY-04**
SHEET NO. **06.04**

GENERAL NOTES:

1. SEE SHEET HW-910_20 FOR HARDWARE AND W-BEAM DELINEATOR DETAILS.
   SEE SHEET HW-910_23 "METAL BEAM RAIL (R-B MASH) HALF AND QUARTER POST SPACING".
2. W-BEAM DELINEATOR MAY BE INSTALLED AT POST BOLT CONNECTION TO MAINTAIN APPROPRIATE DELINEATOR SPACING.

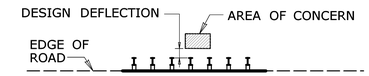

POST SPACING		DESIGN DEFLECTION
STANDARD	(6' - 3")	4' - 3"
HALF POST	(3' - 1½")	2' - 8"
QUARTER POST	(1' - 6¾")	1' - 10"

TABLE 1

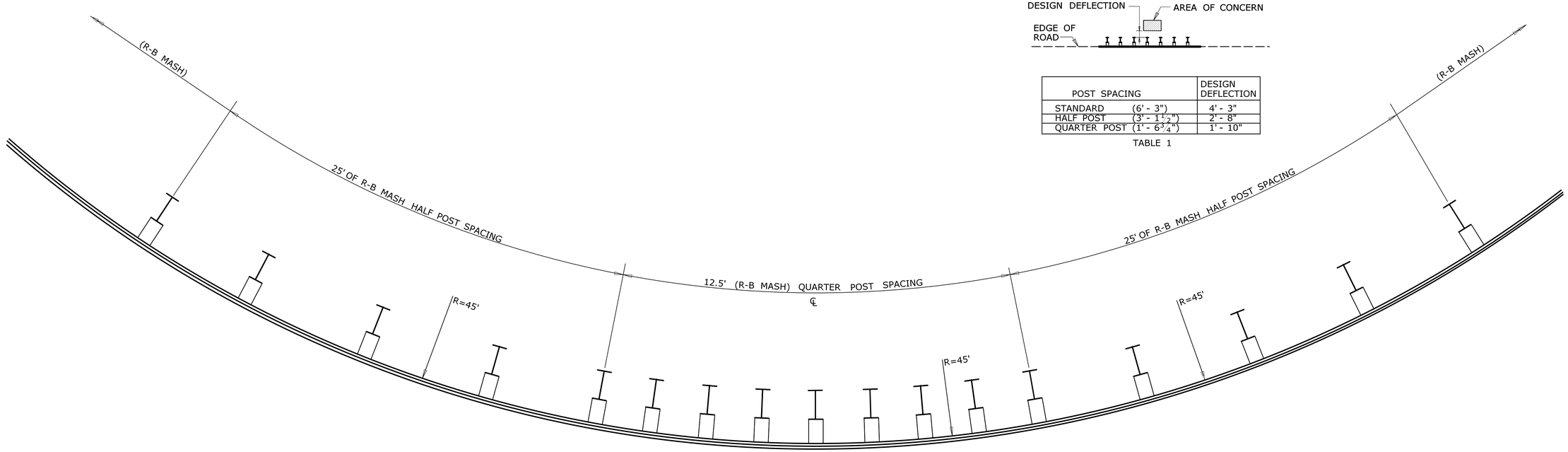

PLAN

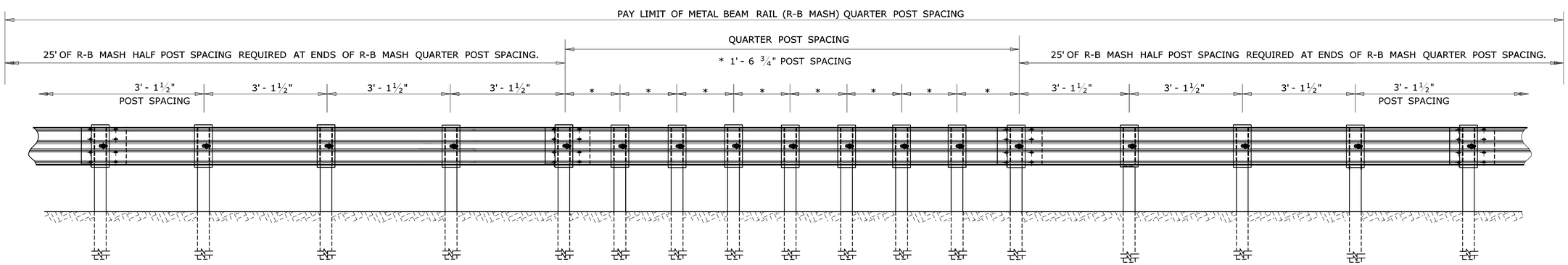

METAL BEAM RAIL (R-B MASH) QUARTER POST SPACING

REV.	DATE	REVISION DESCRIPTION	SHEET NO.

THE INFORMATION, INCLUDING ESTIMATED QUANTITIES OF WORK, SHOWN ON THESE SHEETS IS BASED ON LIMITED INVESTIGATIONS BY THE STATE AND IS IN NO WAY WARRANTED TO INDICATE THE CONDITIONS OF ACTUAL QUANTITIES OF WORK WHICH WILL BE REQUIRED.

Plotted Date: 2/4/2020

DESIGNER/DRAFTER: SMT
CHECKED BY: NAI
NOT TO SCALE

STATE OF CONNECTICUT
DEPARTMENT OF TRANSPORTATION

Filename: ...\HW_MSH_0174_0418_PLN-05.dgn

SIGNATURE/ BLOCK:
OFFICE OF ENGINEERING
APPROVED BY:

PROJECT TITLE:
INSTALLATION AND REVISIONS OF TRAFFIC CONTROL SIGNALS IN DISTRICT 4

TOWN:
NEWTOWN
NEW FAIRFIELD

DRAWING TITLE:
RT 37 & RT 39
GUIDERAIL DETAIL

PROJECT NO. 0174-0418
DRAWING NO. HWY-05
SHEET NO. 06.05