05 - STRUCTURES
INDEX OF DRAWINGS

DRAWING NUMBER	DRAWING TITLE	DRAWING NUMBER	DRAWING TITLE
S-01	STRUCTURES SUBSET INDEX OF DRAWINGS	S-21	STEEL REPAIR DETAILS (1 OF 2)
S-02	GENERAL PLAN	S-22	STEEL REPAIR DETAILS (2 OF 2)
S-03	RETAINING WALL DETAILS		
S-04	BRIDGE SECTIONS		
S-05	DECK JOINT AND DECK PATCH DETAILS		
S-06	PREFORMED JOINT SEAL DETAILS		
S-07	SIDEWALK JOINT PLANS, SECTIONS AND DETAILS		
S-08	DECK END PREPARATION FOR ELASTOMERIC CONCRETE HEADERS		
S-09	ASPHALTIC PLUG EXPANSION JOINT NOTES AND DETAILS		
S-10	ASPHALTIC PLUG JOINT INSTALLATION SEQUENCE		
S-11	MBR (RB-MASH) DETAILS (1 OF 2)		
S-12	MBR (RB-MASH) DETAILS (2 OF 2)		
S-13	METAL BRIDGE RAIL (HANDRAIL) DETAILS		
S-14	FRAMING PLANS		
S-15	DECK FRAMING PANEL 1 AND PANEL 2 PLANS		
S-16	DECK FRAMING PANEL 3 AND PANEL 4 PLANS		
S-17	DECK FRAMING PANEL 5 AND PANEL 6 PLANS		
S-18	DECK FRAMING PANEL 7 AND PANEL 8 PLANS		
S-19	TRUSS ELEVATIONS		
S-20	SWAY BRACING ELEVATIONS		

DESIGNED BY:
CLOUGH, HARBOUR & ASSOCIATES LLP
200 CORPORATE PLACE, SUITE 110
ROCKY HILL, CT 06067

STATE OF CONNECTICUT
LICENSED PROFESSIONAL ENGINEER
No. 19382

Robert J. Faulkner
I am approving this document
2019.12.18 09:10:46-05'00'

REV.	DATE	REVISION DESCRIPTION	SHEET NO.
-	-	-	-
-	-	-	-
-	-	-	-
-	-	-	-
-	-	-	-
-	-	-	-

THE INFORMATION, INCLUDING ESTIMATED QUANTITIES OF WORK, SHOWN ON THESE SHEETS IS BASED ON LIMITED INVESTIGATIONS BY THE STATE AND IS IN NO WAY WARRANTED TO INDICATE THE CONDITIONS OF ACTUAL QUANTITIES OF WORK WHICH WILL BE REQUIRED.

Plotted Date: 12/17/2019

DESIGNER/DRAFTER: **PAL**
CHECKED BY: **KAT**

STATE OF CONNECTICUT
DEPARTMENT OF TRANSPORTATION

Filename: ...\SB_MSH_0051_0272_TITLE.dgn

SIGNATURE/BLOCK:
STATE OF CONNECTICUT
LICENSED PROFESSIONAL ENGINEER
No. 19382
10/09/18

CLOUGH, HARBOUR & ASSOCIATES, LLP
200 CORPORATE PL.
ROCKY HILL, CT 06067

PROJECT TITLE:
REHABILITATION OF BRIDGE NOS. 01487 & 03245 RTE 177 OVER FARMINGTON RIVER

TOWN: **FARMINGTON**

DRAWING TITLE: **STRUCTURES SUBSET INDEX OF DRAWINGS**

PROJECT NO. **51-272**
DRAWING NO. **S-01**
SHEET NO. **05.01**

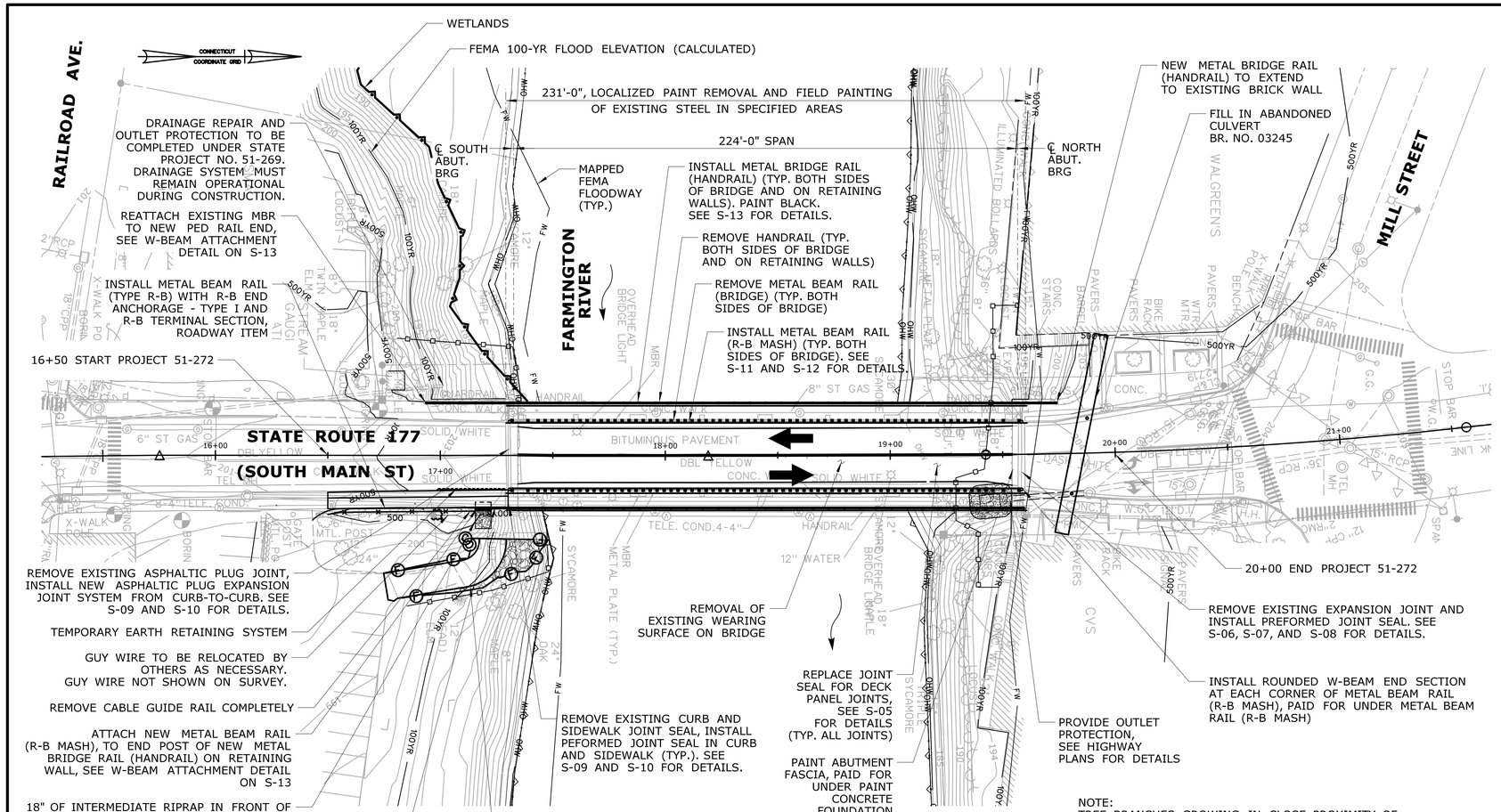

NOTE:
TREE BRANCHES GROWING IN CLOSE PROXIMITY OF TRUSS SHALL BE CUT BACK 10 FT CLEAR OF TRUSS, PAID UNDER CLEARING AND GRUBBING ROADWAY ITEM.

GENERAL PLAN
SCALE: 1" = 30'

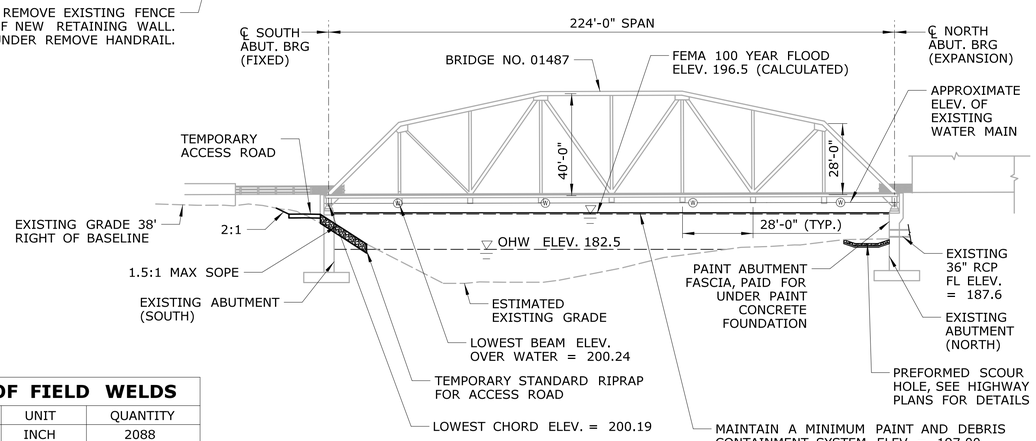

EAST ELEVATION
SCALE: 1" = 30'

INSPECTION OF FIELD WELDS

METHODS	UNIT	QUANTITY
ULTRASONIC	INCH	2088
MAGNETIC PARTICLE	FEET	0

CONCRETE DISTRIBUTION

FOOTING CONCRETE	C.Y.	3
ABUTMENT AND WALL CONCRETE	C.Y.	3
BRIDGE DECK CONCRETE	C.Y.	5
TOTAL	C.Y.	11

GENERAL NOTES:

SPECIFICATIONS: CONNECTICUT DEPARTMENT OF TRANSPORTATION STANDARD SPECIFICATION FORM 817 (2016) INCLUDING SUPPLEMENTAL SPECIFICATIONS TO JANUARY 2019, AND SPECIAL PROVISIONS.

DESIGN SPECIFICATIONS: AASHTO LRFD BRIDGE DESIGN SPECIFICATION (AASHTO 8TH EDITION, 2017) AS SUPPLEMENTED BY THE CONNECTICUT DEPARTMENT OF TRANSPORTATION BRIDGE DESIGN MANUAL (2003 WITH INTERIM REVISIONS UP TO AND INCLUDING 2011).

MATERIAL STRENGTHS:

CLASS PCC03340 ..... f'c = 3,000 psi
CLASS PCC04462 ..... f'c = 4,000 psi

THE CONCRETE STRENGTH, f'c, USED IN DESIGN OF THE CONCRETE COMPONENTS IS NOTED ABOVE. THE COMPRESSIVE STRENGTH OF THE CONCRETE IN THE CONSTRUCTED COMPONENTS SHALL CONFORM TO THE REQUIREMENTS OF 6.01 - CONCRETE FOR STRUCTURES, AND M.03 - PORTLAND CEMENT CONCRETE.

REINFORCEMENT

ASTM A615 GRADE 60..... fy = 60000 PSI

STRUCTURAL STEEL

AASHTO M270, GRADE 50..... Fy = 50000 PSI

LIVE LOAD: AASHTO AND STATE LEGAL LOADS. CONSTRUCTION VEHICLES MUST NOT EXCEED AASHTO AND STATE LEGAL LOADS.

FUTURE PAVING ALLOWANCE: NONE

STRUCTURAL STEEL: SEE STRUCTURE SHEET NOTES FOR DESIGNATIONS AND REQUIREMENTS.

PAINT: PAINT SHALL CONFORM TO THE REQUIREMENTS OF THE SPECIAL PROVISION, "LOCALIZED PAINT REMOVAL AND FIELD PAINTING OF EXISTING STEEL." THE COLOR OF THE TOPCOAT MATERIAL ON THE STRUCTURAL STEEL SHALL BE SELECTED FROM THE FEDERAL STANDARD COLORS TO MATCH THE EXISTING PAINT COLOR AS CLOSELY AS POSSIBLE. THE EXISTING PAINT COLOR IS THE DEPARTMENT'S LIGHT GREEN STANDARD BRIDGE COLOR NUMBER 503.

BITUMINOUS CONCRETE OVERLAY: THIS SHALL CONSIST OF TWO LIFTS. THE FIRST SHALL BE HMA S0.25 TRAFFIC LEVEL 2 (1" THICK) AND THE SECOND SHALL BE PMA S0.375 TRAFFIC LEVEL 3 (1 1/2" THICK).

FOUNDATION PRESSURE: THE VARIOUS GROUP LOADINGS NOTED ON THE SUBSTRUCTURE PLAN SHEETS REFER TO THE GROUP LOADS AS GIVEN IN THE AASHTO STANDARD SPECIFICATIONS FOR HIGHWAY BRIDGES.

DIMENSIONS: WHEN DECIMAL DIMENSIONS ARE GIVEN TO LESS THAN THREE DECIMAL PLACES, THE OMITTED DIGITS SHALL BE ASSUMED TO BE ZEROS.

EXISTING DIMENSIONS: DIMENSIONS OF EXISTING STRUCTURE SHOWN ON THESE PLANS ARE FOR GENERAL REFERENCE ONLY. THEY HAVE BEEN TAKEN FROM THE ORIGINAL DESIGN DRAWINGS AND ARE NOT GURANTEEED. THE CONTRACTOR SHALL TAKE ALL FIELD MEASUREMENTS NECESSARY TO ASSURE PROPER FIT OF THE FINISHED WORK AND SHALL ASSUME FULL RESPONSIBILITY FOR THEIR ACCURACY.

WHEN SHOP DRAWINGS BASED ON FIELD MEASUREMENTS ARE SUBMITTED FOR APPROVAL, THE FIELD MEASUREMENTS SHALL ALSO BE SUBMITTED FOR REFERENCE BY THE REVIEWER.

CONCRETE NOTES:

CLASS PCC03340 CONCRETE SHALL BE USED FOR CAST-IN-PLACE RETAINING WALL FOOTING AND STEM AND CLASS PCC04462 CONCRETE SHALL BE USED FOR THE DECK END, SIDEWALK END AND BACKWALL REBUILD AT THE NORTH JOINT.

SEE PARTIAL DEPTH PATCH AND FULL DEPTH PATCH SPECIAL PROVISIONS FOR CONCRETE PATCH MATERIAL REQUIREMENTS.

JOINT SEAL: SEE SPECIAL PROVISIONS.

EXPOSED EDGES: EXPOSED EDGES OF CONCRETE SHALL BE BEVELED 1"X1" UNLESS DIMENSIONED OTHERWISE.

CONCRETE COVER: ALL REINFORCEMENT SHALL HAVE TWO INCHES COVER UNLESS NOTED OTHERWISE.

REINFORCEMENT: ALL REINFORCEMENT SHALL BE ASTM A615 GRADE 60.

PREFORMED EXPANSION JOINT FILLER: THE COST OF FURNISHING AND INSTALLING PREFORMED EXPANSION JOINT FILLER SHALL BE INCLUDED IN THE COST OF THE CONCRETE ITEMS.

CONSTRUCTION JOINTS: CONSTRUCTION JOINTS, OTHER THAN THOSE SHOWN ON THE PLANS, WILL NOT BE PERMITTED WITHOUT THE PRIOR APPROVAL OF THE ENGINEER.

NOTICE TO BRIDGE INSPECTORS

THE DEPARTMENTS BRIDGE SAFETY PROCEDURES REQUIRE THIS BRIDGE TO BE INSPECTED FOR, BUT NOT LIMITED TO, ALL APPROPRIATE COMPONENTS INDICATED IN THE GOVERNING MANUALS FOR BRIDGE INSPECTION. ATTENTION MUST BE GIVEN TO INSPECTING THE FOLLOWING SPECIAL COMPONENTS AND DETAILS. (THE LISTING OF COMPONENTS FOR SPECIFIC ATTENTION SHALL NOT BE CONSTRUED TO REDUCE THE IMPORTANCE OF INSPECTION OF ANY OTHER COMPONENT OF THE STRUCTURE.) THE FREQUENCY OF INSPECTION OF THIS STRUCTURE SHALL BE IN ACCORDANCE WITH THE GOVERNING MANUALS FOR BRIDGE INSPECTION, UNLESS OTHERWISE DIRECTED BY THE MANAGER OF BRIDGE SAFETY AND EVALUATION.

COMPONENT OR DETAIL	STRUCTURE SHEET REFERENCE

REV.	DATE	REVISION DESCRIPTION	SHEET NO.
-	-	-	-
-	-	-	-
-	-	-	-
-	-	-	-
-	-	-	-
-	-	-	-

THE INFORMATION, INCLUDING ESTIMATED QUANTITIES OF WORK, SHOWN ON THESE SHEETS IS BASED ON LIMITED INVESTIGATIONS BY THE STATE AND IS IN NO WAY WARRANTED TO INDICATE THE CONDITIONS OF ACTUAL QUANTITIES OF WORK WHICH WILL BE REQUIRED.

Plotted Date: 12/17/2019

DESIGNER/DRAFTER: PAL
CHECKED BY: KAT
SCALE AS NOTED

STATE OF CONNECTICUT
DEPARTMENT OF TRANSPORTATION

Filename: ...\SB_MSH_0051_0272_GPN.dgn

SIGNATURE/BLOCK:
STATE OF CONNECTICUT
No. 19382
LICENSED PROFESSIONAL ENGINEER
10/18/2019

CLOUGH, HARBOUR & ASSOCIATES, LLP
200 CORPORATE PL.
ROCKY HILL, CT 06067

PROJECT TITLE:
REHABILITATION OF
BRIDGE NOS. 01487 & 03245
RTE 177 OVER FARMINGTON RIVER

TOWN: FARMINGTON

DRAWING TITLE: GENERAL PLAN

PROJECT NO. 51-272
DRAWING NO. S-02
SHEET NO. 05.02

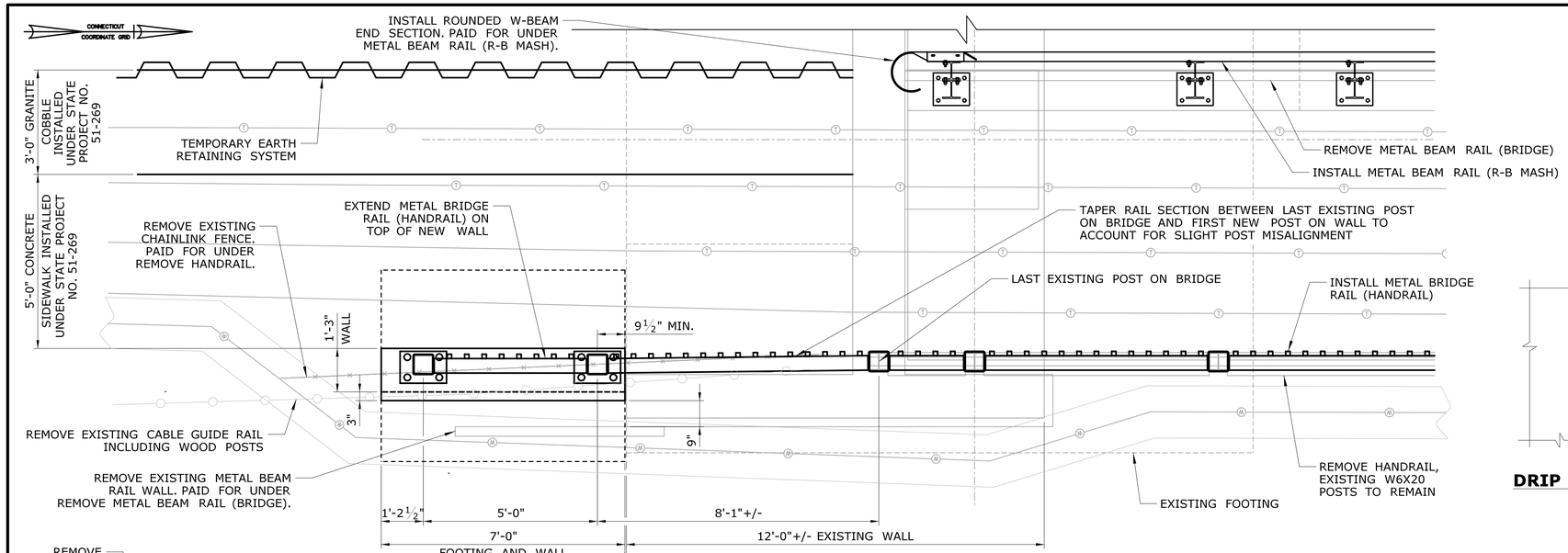

RETAINING WALL PLAN

SCALE: ½" = 1'-0"

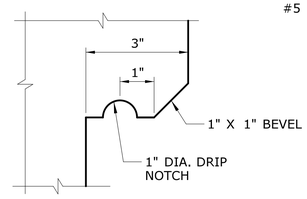

DRIP NOTCH DETAIL

NOT TO SCALE

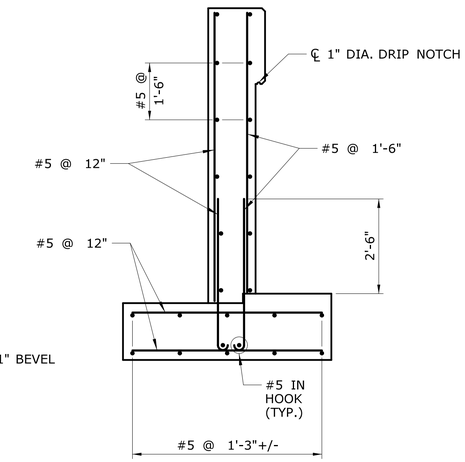

NOTE:
REINFORCING IN FOOTING SHALL HAVE 3" COVER AND REINFORCING IN WALL SHALL HAVE 2" COVER. REINFORCING PAID FOR UNDER "DEFORMED STEEL BARS".

RETAINING WALL REINFORCING

SCALE: ½" = 1'-0"

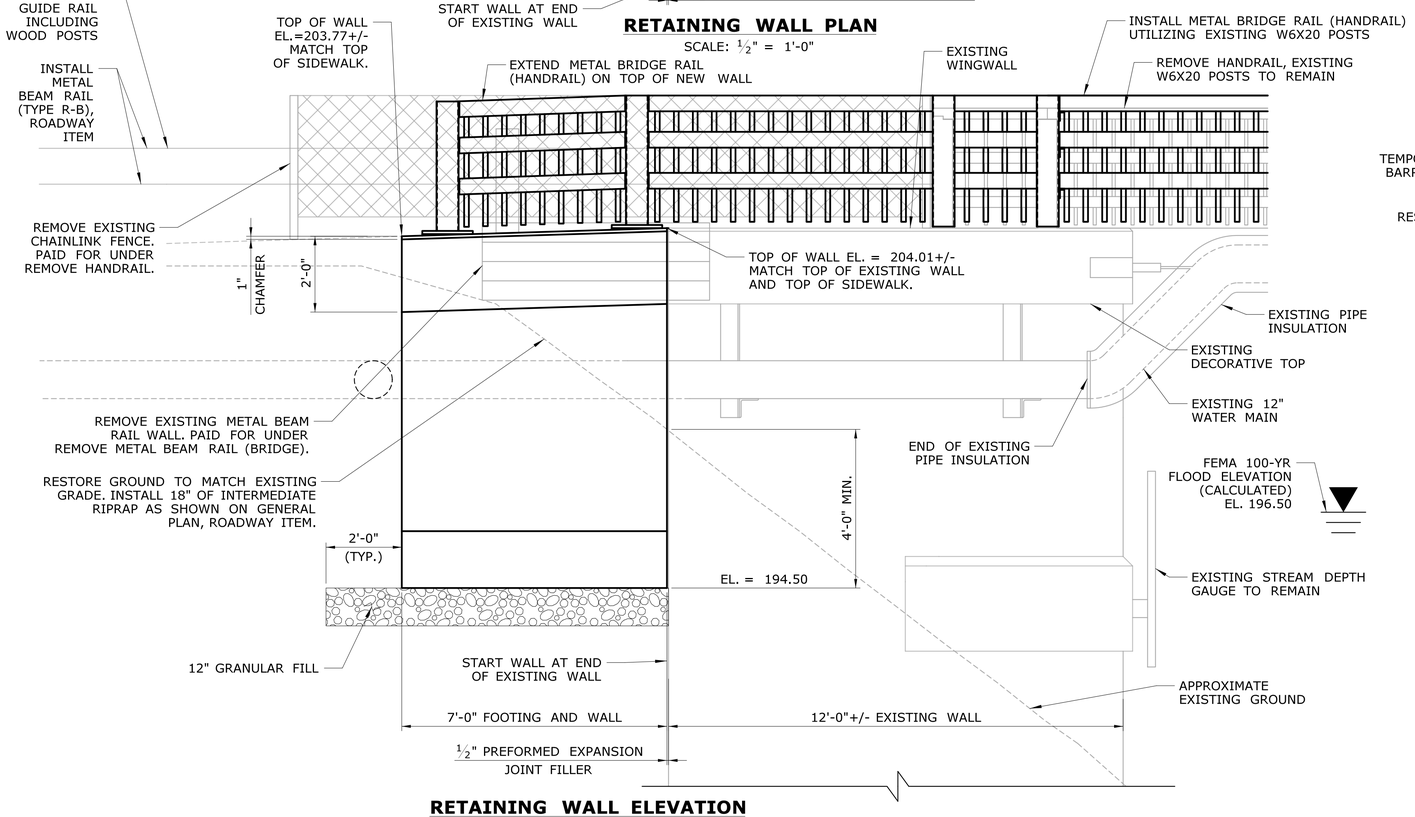

RETAINING WALL ELEVATION

SCALE: ½" = 1'-0"

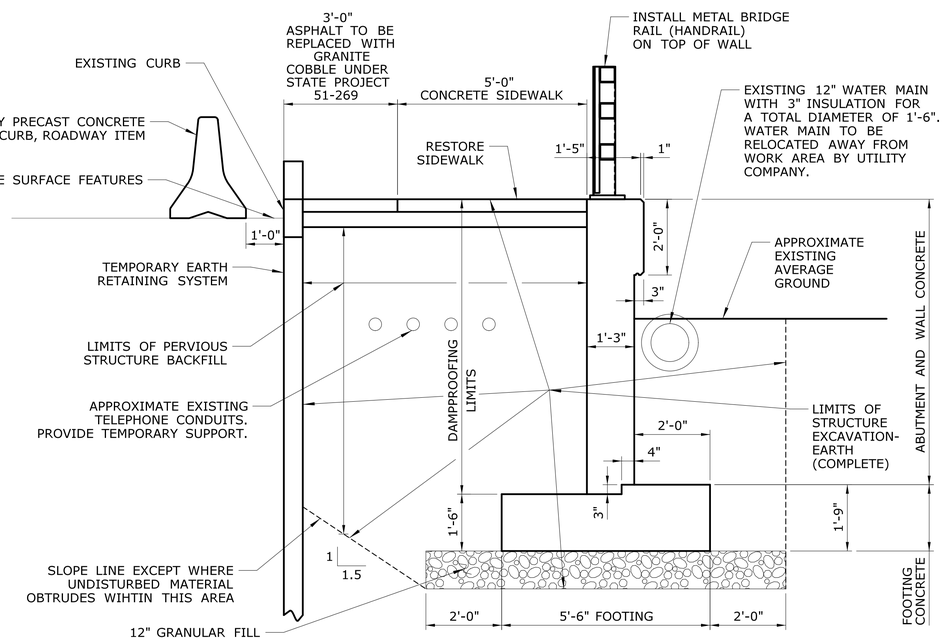

MAX DESIGN BEARING PRESSURE:
1.61 KSF (SERVICE)
2.30 KSF (STRENGTH)

NOTE:
RETAINING WALL SHALL NOT BE PLACED ON FILL. FILL SHALL BE EXCAVATED AND REPLACED WITH GRANULAR FILL AS DIRECTED BY THE ENGINEER. EXCAVATION OF THE FILL AND REPLACEMENT WITH GRANULAR FILL IS PAID FOR UNDER ITEMS STRUCTURE EXCAVATION-EARTH (COMPLETE) AND GRANULAR FILL.

RETAINING WALL SECTION

SCALE: ½" = 1'-0"

REV.	DATE	REVISION DESCRIPTION	SHEET NO.
-	-	-	-
-	-	-	-
-	-	-	-
-	-	-	-
-	-	-	-
-	-	-	-

THE INFORMATION, INCLUDING ESTIMATED QUANTITIES OF WORK, SHOWN ON THESE SHEETS IS BASED ON LIMITED INVESTIGATIONS BY THE STATE AND IS IN NO WAY WARRANTED TO INDICATE THE CONDITIONS OF ACTUAL QUANTITIES OF WORK WHICH WILL BE REQUIRED.

Plotted Date: 12/17/2019

DESIGNER/DRAFTER: PAL
CHECKED BY: KAT
SCALE AS NOTED

STATE OF CONNECTICUT
DEPARTMENT OF TRANSPORTATION

Filename: ...\SB_MSH_0051_0272_WALL.dgn

SIGNATURE/BLOCK:
STATE OF CONNECTICUT — STEVEN J. FAHRNEY — No. 19382 — LICENSED PROFESSIONAL ENGINEER — 10/18/2019

CLOUGH, HARBOUR & ASSOCIATES, LLP
200 CORPORATE PL.
ROCKY HILL, CT 06067

PROJECT TITLE:
REHABILITATION OF BRIDGE NOS. 01487 & 03245 RTE 177 OVER FARMINGTON RIVER

TOWN: **FARMINGTON**

DRAWING TITLE: **RETAINING WALL DETAILS**

PROJECT NO. 51-272
DRAWING NO. S-03
SHEET NO. 05.03

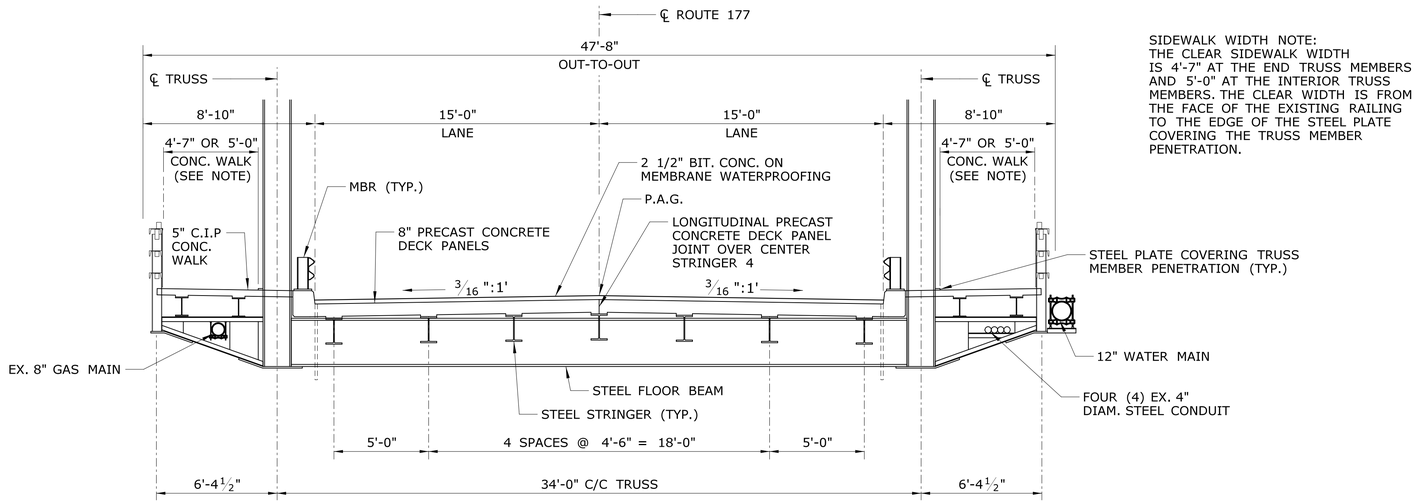

SIDEWALK WIDTH NOTE:
THE CLEAR SIDEWALK WIDTH IS 4'-7" AT THE END TRUSS MEMBERS AND 5'-0" AT THE INTERIOR TRUSS MEMBERS. THE CLEAR WIDTH IS FROM THE FACE OF THE EXISTING RAILING TO THE EDGE OF THE STEEL PLATE COVERING THE TRUSS MEMBER PENETRATION.

TYPICAL EXISTING SECTION

SCALE: 1/4" = 1'-0"

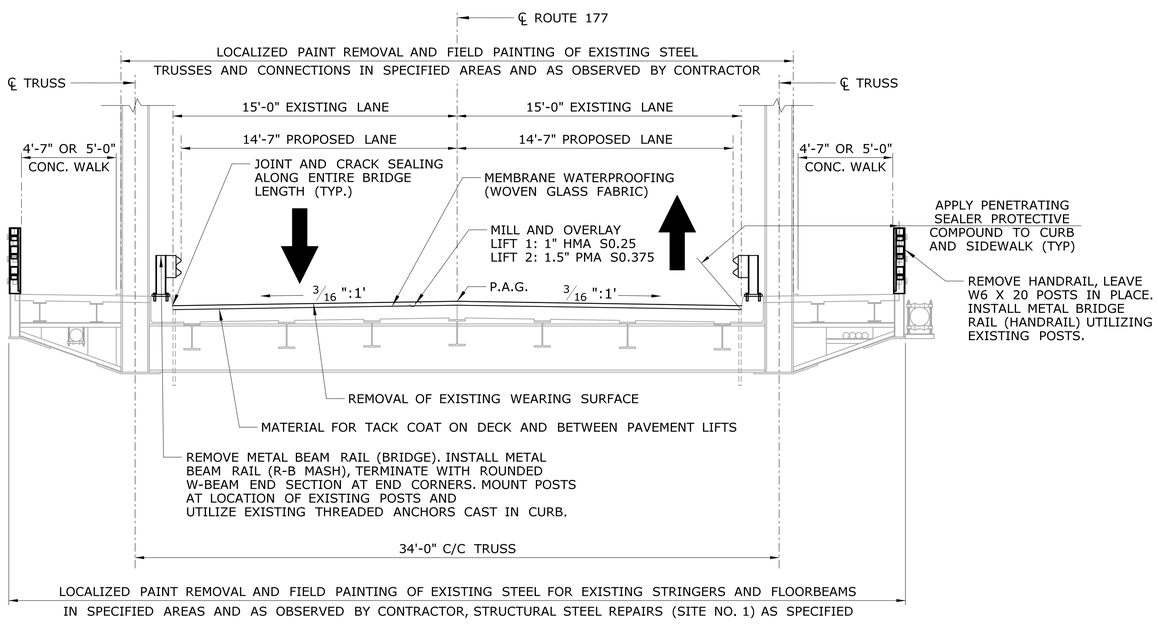

TYPICAL PROPOSED SECTION

SCALE: 1/4" = 1'-0"

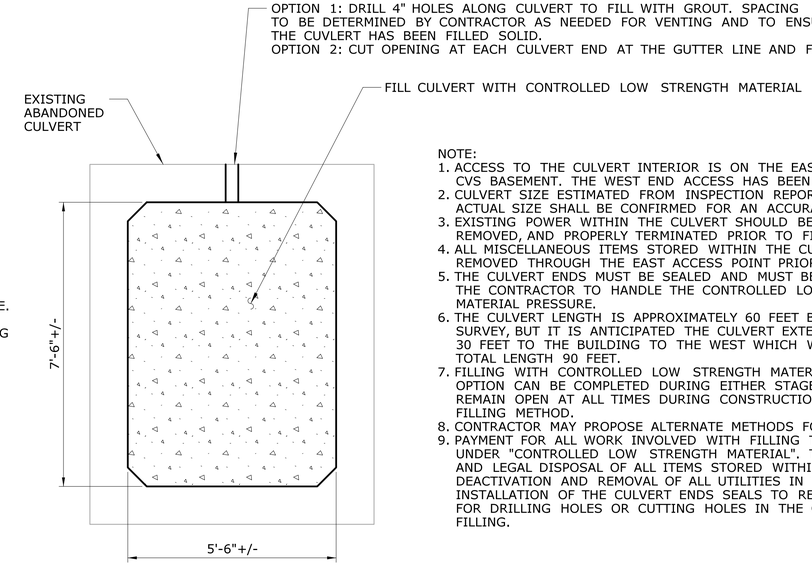

NOTE:
1. ACCESS TO THE CULVERT INTERIOR IS ON THE EAST SIDE FROM THE CVS BASEMENT. THE WEST END ACCESS HAS BEEN BLOCKED OFF.
2. CULVERT SIZE ESTIMATED FROM INSPECTION REPORT PHOTOGRAPHS. ACTUAL SIZE SHALL BE CONFIRMED FOR AN ACCURATE FILL VOLUME.
3. EXISTING POWER WITHIN THE CULVERT SHOULD BE DEACTIVATED, REMOVED, AND PROPERLY TERMINATED PRIOR TO FILLING.
4. ALL MISCELLANEOUS ITEMS STORED WITHIN THE CULVERT SHALL BE REMOVED THROUGH THE EAST ACCESS POINT PRIOR TO FILLING.
5. THE CULVERT ENDS MUST BE SEALED AND MUST BE DESIGNED BY THE CONTRACTOR TO HANDLE THE CONTROLLED LOW STRENGTH MATERIAL PRESSURE.
6. THE CULVERT LENGTH IS APPROXIMATELY 60 FEET BASED ON THE SURVEY, BUT IT IS ANTICIPATED THE CULVERT EXTENDS ANOTHER 30 FEET TO THE BUILDING TO THE WEST WHICH WOULD MAKE THE TOTAL LENGTH 90 FEET.
7. FILLING WITH CONTROLLED LOW STRENGTH MATERIAL USING EITHER OPTION CAN BE COMPLETED DURING EITHER STAGE. ONE SIDEWALK MUST REMAIN OPEN AT ALL TIMES DURING CONSTRUCTION REGARDLESS OF FILLING METHOD.
8. CONTRACTOR MAY PROPOSE ALTERNATE METHODS FOR FILLING THE CULVERT.
9. PAYMENT FOR ALL WORK INVOLVED WITH FILLING THE CULVERT IS INCLUDED UNDER "CONTROLLED LOW STRENGTH MATERIAL". THIS INCLUDES REMOVAL AND LEGAL DISPOSAL OF ALL ITEMS STORED WITHIN THE CULVERT, DEACTIVATION AND REMOVAL OF ALL UTILITIES IN THE CULVERT, DESIGN AND INSTALLATION OF THE CULVERT ENDS SEALS TO RETAIN TO FILL PRESSURE, AND FOR DRILLING HOLES OR CUTTING HOLES IN THE CULVERT FOR ACCESS AND FILLING.

BRIDGE 03245 SECTION

SCALE: 1/2" = 1'-0"

REV.	DATE	REVISION DESCRIPTION	SHEET NO.
-	-	-	-
-	-	-	-
-	-	-	-
-	-	-	-
-	-	-	-
-	-	-	-

THE INFORMATION, INCLUDING ESTIMATED QUANTITIES OF WORK, SHOWN ON THESE SHEETS IS BASED ON LIMITED INVESTIGATIONS BY THE STATE AND IS IN NO WAY WARRANTED TO INDICATE THE CONDITIONS OF ACTUAL QUANTITIES OF WORK WHICH WILL BE REQUIRED.

Plotted Date: 12/17/2019

DESIGNER/DRAFTER: PAL
CHECKED BY: KAT
SCALE AS NOTED

STATE OF CONNECTICUT
DEPARTMENT OF TRANSPORTATION

Filename: ...\SB_MSH_0051_0272_SEC.dgn

SIGNATURE/BLOCK:
STATE OF CONNECTICUT
CHRISTOPHER J. BRUNO
No. 19382
LICENSED
PROFESSIONAL ENGINEER
10/18/2019

CLOUGH, HARBOUR & ASSOCIATES, LLP
200 CORPORATE PL.
ROCKY HILL, CT 06067

PROJECT TITLE:
REHABILITATION OF BRIDGE NOS. 01487 & 03245 RTE 177 OVER FARMINGTON RIVER

TOWN: **FARMINGTON**

DRAWING TITLE: **BRIDGE SECTIONS**

PROJECT NO. 51-272
DRAWING NO. S-04
SHEET NO. 05.04

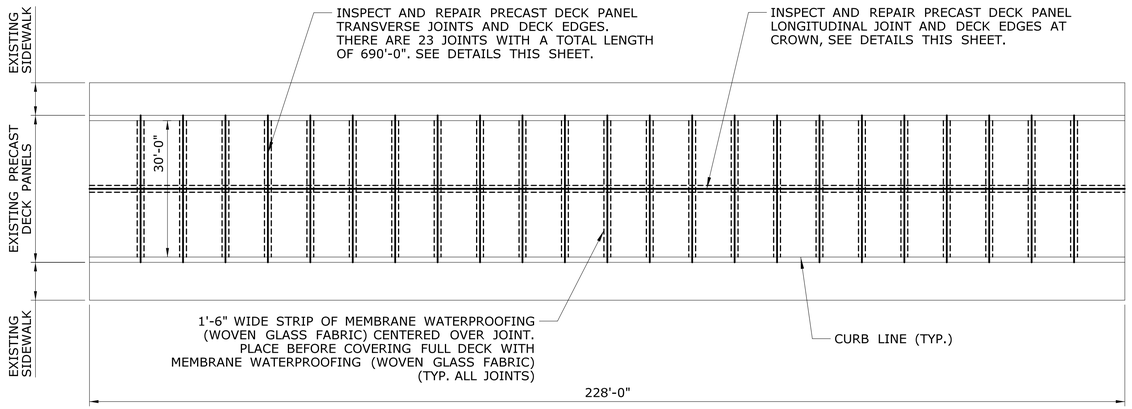

DECK JOINT PLAN

NOT TO SCALE

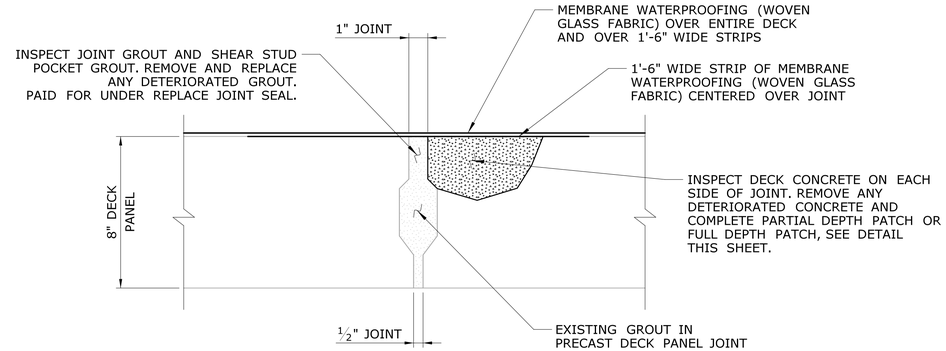

PRECAST DECK PANEL TYPICAL TRANSVERSE JOINT

SCALE: 3" = 1'-0"

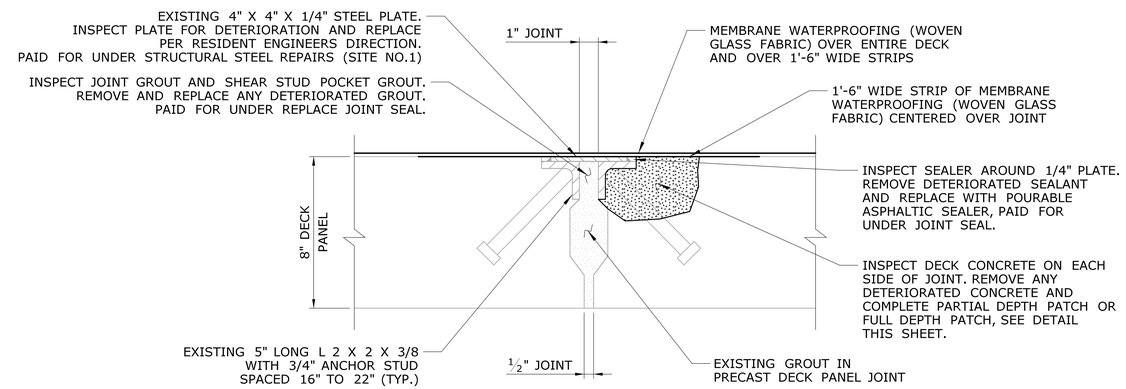

PRECAST DECK PANEL LONGITUDINAL JOINT AT CROWN

SCALE: 3" = 1'-0"

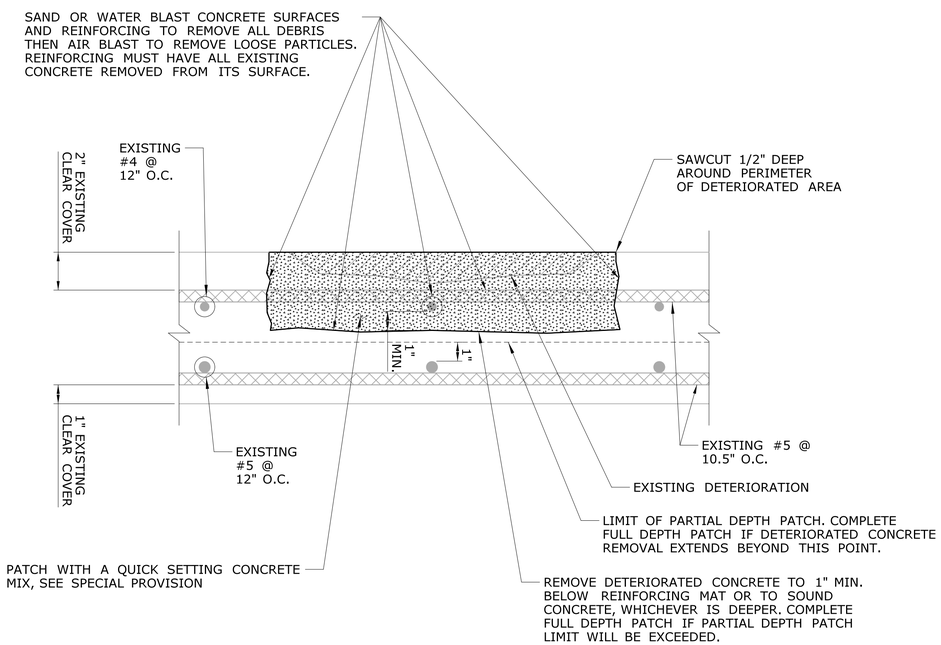

TYPICAL DECK PARTIAL DEPTH PATCH DETAIL (TRANSVERSE SECTION)

SCALE: 3" = 1'-0"

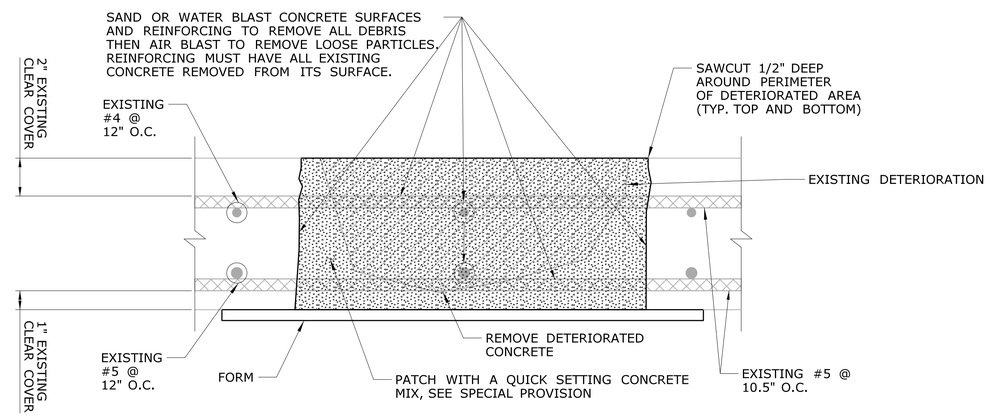

TYPICAL DECK FULL DEPTH PATCH DETAIL (TRANSVERSE SECTION)

SCALE: 3" = 1'-0"

FULL AND PARTIAL DEPTH PATCH NOTES:

1. EXISTING REINFORCING STEEL IS EPOXY COATED. ANY DAMAGED EPOXY COATING WITHIN LIMITS OF REPAIR MUST BE RECOATED UNDER PAY ITEM "CLEAN AND COAT EXPOSED REINFORCING STEEL".
2. DAMAGED REINFORCING STEEL SHALL BE REPLACED UNDER PAY ITEM "DEFORMED STEEL BARS - EPOXY COATED".
3. ALL CONCRETE SURFACES MUST BE DAMPENED PRIOR TO PLACING PATCH MATERIAL.
4. REPAIR METHODOLOGY ALSO APPLIES TO PATCH OF SIDEWALKS.
5. SAW CUTTING SLURRY MUST BE CONTAINED TO PREVENT DISCHARGE INTO THE FARMINGTON RIVER.

REV.	DATE	REVISION DESCRIPTION	SHEET NO.
-	-	-	-
-	-	-	-
-	-	-	-
-	-	-	-
-	-	-	-
-	-	-	-

THE INFORMATION, INCLUDING ESTIMATED QUANTITIES OF WORK, SHOWN ON THESE SHEETS IS BASED ON LIMITED INVESTIGATIONS BY THE STATE AND IS IN NO WAY WARRANTED TO INDICATE THE CONDITIONS OF ACTUAL QUANTITIES OF WORK WHICH WILL BE REQUIRED.

Plotted Date: 12/17/2019

DESIGNER/DRAFTER: PAL
CHECKED BY: KAT
SCALE AS NOTED

STATE OF CONNECTICUT
DEPARTMENT OF TRANSPORTATION

Filename: ...\SB_MSH_0051_0272_DECK_JOINTS.dgn

SIGNATURE/BLOCK:

CLOUGH, HARBOUR & ASSOCIATES, LLP
200 CORPORATE PL.
ROCKY HILL, CT 06067

PROJECT TITLE:
REHABILITATION OF BRIDGE NOS. 01487 & 03245 RTE 177 OVER FARMINGTON RIVER

TOWN: FARMINGTON

DRAWING TITLE: DECK JOINT AND DECK PATCH DETAILS

PROJECT NO. 51-272
DRAWING NO. S-05
SHEET NO. 05.05

JOINT SELECTION TABLE

DESCRIPTION OF JOINT LOCATION:			ABUTMENT NO. 2								
THERMAL MOVEMENT RANGE:		2.06 INCHES									
PRODUCT		NOMINAL MOVEMENT CAPACITY	MFR. RECOMMENDED MINIMUM DECK JOINT GAP J MIN, AT 110° F (IN)	WIDTH OF SHELF (IN)	MIN. BRIDGE DECK GAP AT 110° F (IN) "G"	DECK JOINT GAP, "J", AT INSTALLATION (IN.)					DEPTH OF SHELF (IN.)
						40° F	50° F	60° F	70° F	80° F	
DECK EXPANSION JOINT											
SKEW = 0°											
EMSEAL	BEJS 0275	3.125"	1 1/8	9/16	3/8	2 11/16	2 1/2	2 5/16	2 3/16	2	3 1/2
WABO-FS	FS-275	3.30"	1 1/8	9/16	3/8	2 11/16	2 1/2	2 5/16	2 3/16	2	3 1/2
SIDEWALK EXPANSION JOINT											
SKEW = 0°											
EMSEAL	BEJS 0275	3.125"	1 1/8	9/16	3/8	2 11/16	2 1/2	2 5/16	2 3/16	2	3 1/2
WABO-FS	FS-275	3.30"	1 1/8	9/16	3/8	2 11/16	2 1/2	2 5/16	2 3/16	2	3 1/2

JOINT AND HEADER NOTES

1) THE ELASTOMERIC CONCRETE HEADER AND PREFORMED JOINT SEAL SHALL BE INSTALLED AFTER THE PAVEMENT HAS BEEN PLACED.

2) ELASTOMERIC CONCRETE HEADERS WILL BE PAID FOR UNDER THE ITEM "ELASTOMERIC CONCRETE HEADER". THE PREFORMED SILICONE JOINT SEAL GLAND WILL BE PAID FOR UNDER ITEM, "PREFORMED JOINT SEAL." REMOVAL OF THE EXISTING JOINT COMPONENTS, THE CONCRETE DECK END, AND THE CONCRETE BACKWALL TOP WILL BE PAID FOR UNDER THE ITEM "REMOVE CONCRETE HEADER". THE CONCRETE TO REBUILD THE DECK ENDS, SIDEWALK ENDS AND THE BACKWALL TOP WILL BE PAID FOR UNDER "BRIDGE DECK CONCRETE".

3) DRILLING AND GROUTING GFRP DOWELS AND FURNISHING AND INSTALLING TRANSVERSE GFRP BARS ARE INCLUDED IN THE UNIT PRICE FOR "ELASTOMERIC CONCRETE HEADER".

4) DIMENSIONS "J", "G" AND SHELF WIDTH ARE MEASURED PERPENDICULAR TO THE DECK END. SEE JOINT SELECTION TABLE FOR VALUES.

5) THE PREFORMED JOINT SEAL SHALL BE INSTALLED IN ACCORDANCE WITH THE PLANS, WITH THE MANUFACTURER'S WRITTEN INSTRUCTIONS AND AS DIRECTED BY THE ENGINEER.

6) SURFACE PREPARATION IS CRITICAL FOR ADHESION OF ELASTOMERIC CONCRETE TO THE BRIDGE DECK AND FOR ADHESION OF THE PREFORMED GLAND WITHIN THE JOINT OPENING. THE CONTRACTOR SHALL NOT PROCEED WITH THE INSTALLATION OF THE HEADERS OR PREFORMED GLANDS WITHOUT AUTHORIZATION FROM THE ENGINEER.

7) THE CONTRACTOR MUST INSTALL ONE OF THE PREFORMED JOINT SEAL GLANDS SHOWN IN THE JOINT SELECTION TABLE.

8) IF STAGED CONSTRUCTION IS REQUIRED, ELASTOMERIC CONCRETE HEADER REINFORCEMENT SHALL BE DISCONTINUOUS AT CONSTRUCTION JOINTS.

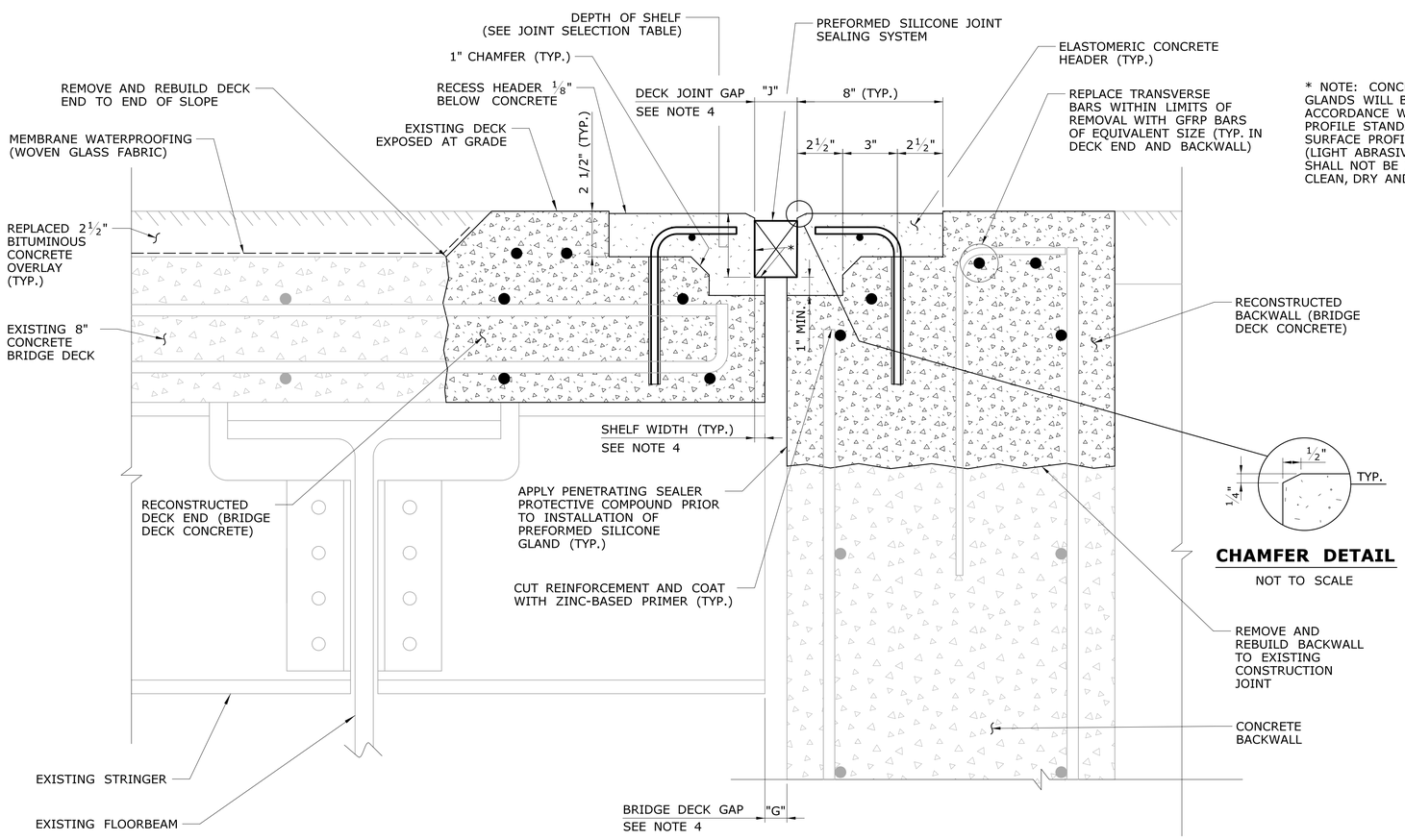

CHAMFER DETAIL

NOT TO SCALE

SECTION - ELASTOMERIC CONCRETE HEADERS AND PREFORMED JOINT SEAL

1 / -

* NOTE: CONCRETE SURFACES TO WHICH SEALING GLANDS WILL BE BONDED SHALL BE PREPARED IN ACCORDANCE WITH ICRI CONCRETE SURFACE PROFILE STANDARDS. THE MINIMUM ACCEPTABLE SURFACE PROFILE IS CSP2 (GRINDING), BUT CSP3 (LIGHT ABRASIVE BLAST) IS PREFERRED. THE GLAND SHALL NOT BE INSTALLED UNTIL THE SURFACE IS CLEAN, DRY AND ACCEPTED BY THE ENGINEER.

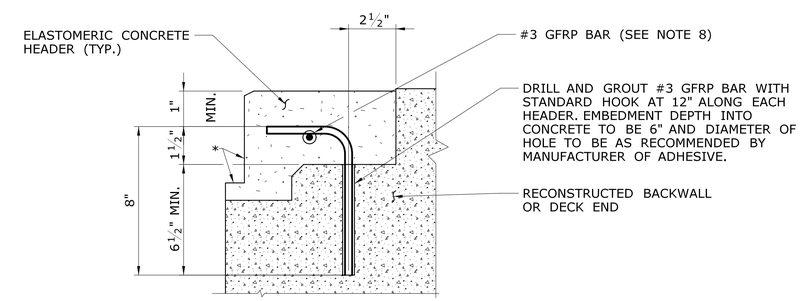

SECTION - HOOKED BAR EMBEDMENT AT HEADER

NOT TO SCALE

REV.	DATE	REVISION DESCRIPTION	SHEET NO.

THE INFORMATION, INCLUDING ESTIMATED QUANTITIES OF WORK, SHOWN ON THESE SHEETS IS BASED ON LIMITED INVESTIGATIONS BY THE STATE AND IS IN NO WAY WARRANTED TO INDICATE THE CONDITIONS OF ACTUAL QUANTITIES OF WORK WHICH WILL BE REQUIRED.

Plotted Date: 12/17/2019

DESIGNER/DRAFTER: **PAL**

CHECKED BY: **KAT**

SCALE AS NOTED

STATE OF CONNECTICUT
DEPARTMENT OF TRANSPORTATION

Filename: ...\SB_MSH_0051_0272_EXP_JOINT01.dgn

SIGNATURE/BLOCK:

STATE OF CONNECTICUT LICENSED PROFESSIONAL ENGINEER No. 19382 10/18/2019

CLOUGH, HARBOUR & ASSOCIATES, LLP
200 CORPORATE PL.
ROCKY HILL, CT 06067

PROJECT TITLE:
REHABILITATION OF BRIDGE NOS. 01487 & 03245 RTE 177 OVER FARMINGTON RIVER

TOWN: **FARMINGTON**

DRAWING TITLE: **PREFORMED JOINT SEAL DETAILS**

PROJECT NO. **51-272**

DRAWING NO. **S-06**

SHEET NO. **05.06**

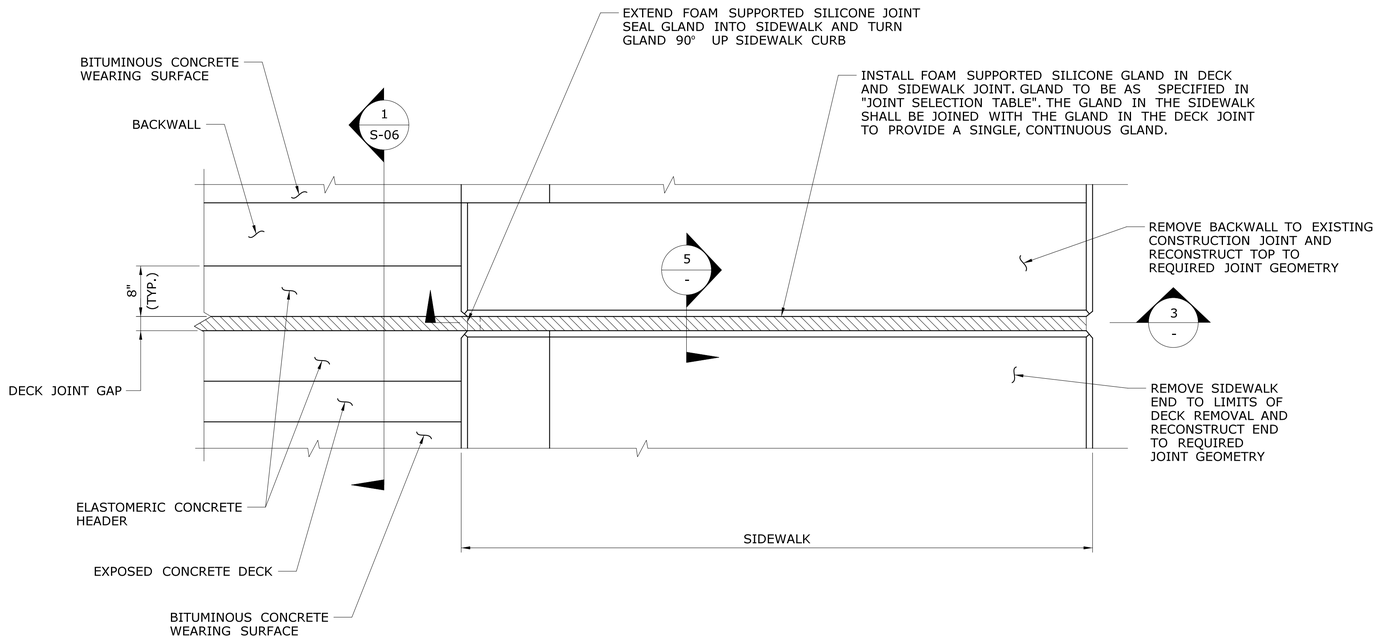

PLAN - EXPANSION JOINT AT SIDEWALKS

SCALE: 1" = 1'-0"

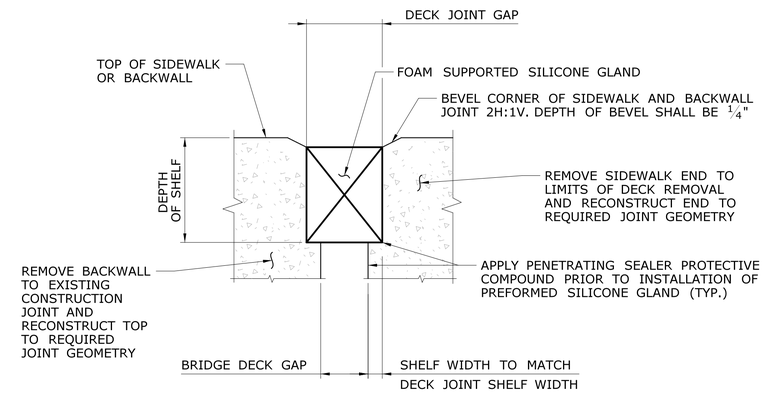

SECTION - SIDEWALK EXPANSION JOINT 5 / -

DETAILS SHOWN ARE BASED ON THE NORTH EXPANSION JOINT. THE DETAILS ALSO APPLY TO THE SIDEWALKS ON THE SOUTH FIXED ASPHALTIC PLUG JOINT END EXCEPT THE SIDEWALK ENDS DO NOT NEED TO BE RECONSTRUCTED TO BUILD A SEAT FOR THE SILICONE SEAL AND THE FOAM SUPPORTED SILICONE GLAND SIZE SHALL BE PER THE ASPHALTIC PLUG JOINT DRAWINGS.

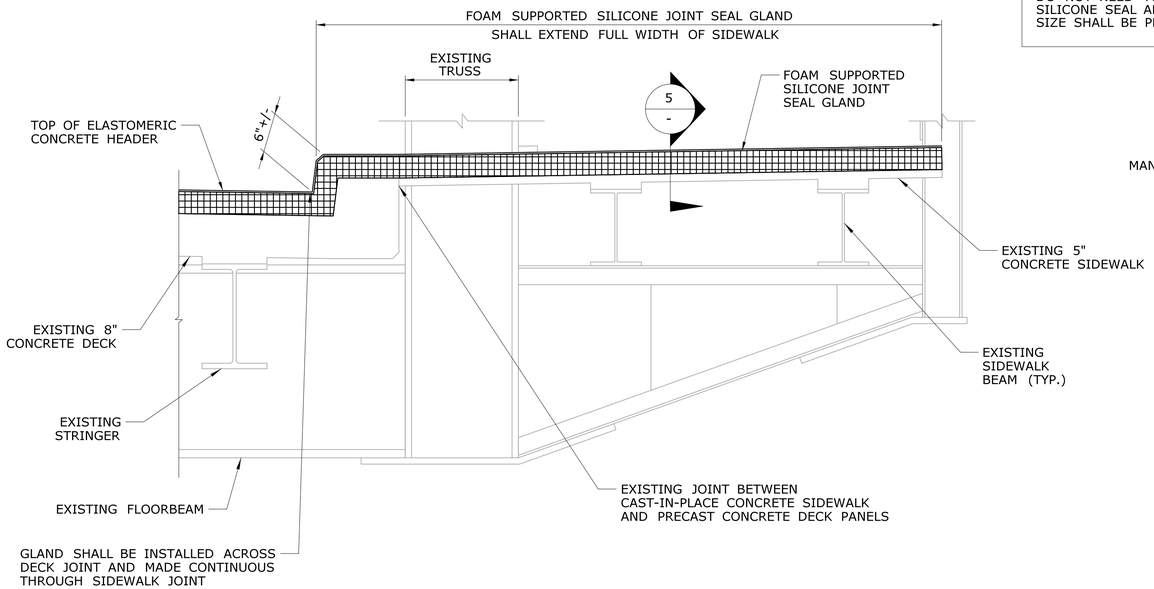

SECTION THROUGH SIDEWALK 3 / -

SCALE: 1" = 1'-0"

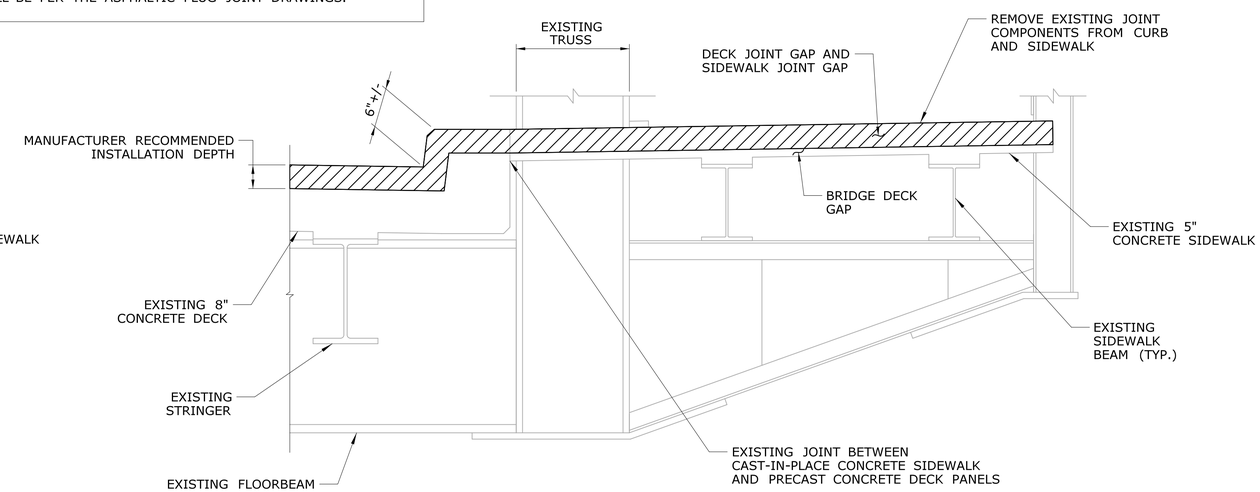

SECTION THROUGH SIDEWALK - GAP DIAGRAM 3 / -

SCALE: 1" = 1'-0"

REV.	DATE	REVISION DESCRIPTION	SHEET NO.

THE INFORMATION, INCLUDING ESTIMATED QUANTITIES OF WORK, SHOWN ON THESE SHEETS IS BASED ON LIMITED INVESTIGATIONS BY THE STATE AND IS IN NO WAY WARRANTED TO INDICATE THE CONDITIONS OF ACTUAL QUANTITIES OF WORK WHICH WILL BE REQUIRED.

Plotted Date: 12/17/2019

DESIGNER/DRAFTER: PAL
CHECKED BY: KAT
SCALE AS NOTED

STATE OF CONNECTICUT
DEPARTMENT OF TRANSPORTATION

Filename: ...\SB_MSH_0051_0272_EXP_JOINT02.dgn

SIGNATURE/BLOCK: STATE OF CONNECTICUT LICENSED PROFESSIONAL ENGINEER No. 19382 12/18/2019

CLOUGH, HARBOUR & ASSOCIATES, LLP
200 CORPORATE PL.
ROCKY HILL, CT 06067

PROJECT TITLE:
REHABILITATION OF BRIDGE NOS. 01487 & 03245 RTE 177 OVER FARMINGTON RIVER

TOWN: **FARMINGTON**

DRAWING TITLE: **SIDEWALK JOINT PLANS, SECTIONS AND DETAILS**

PROJECT NO. 51-272
DRAWING NO. S-07
SHEET NO. 05.07

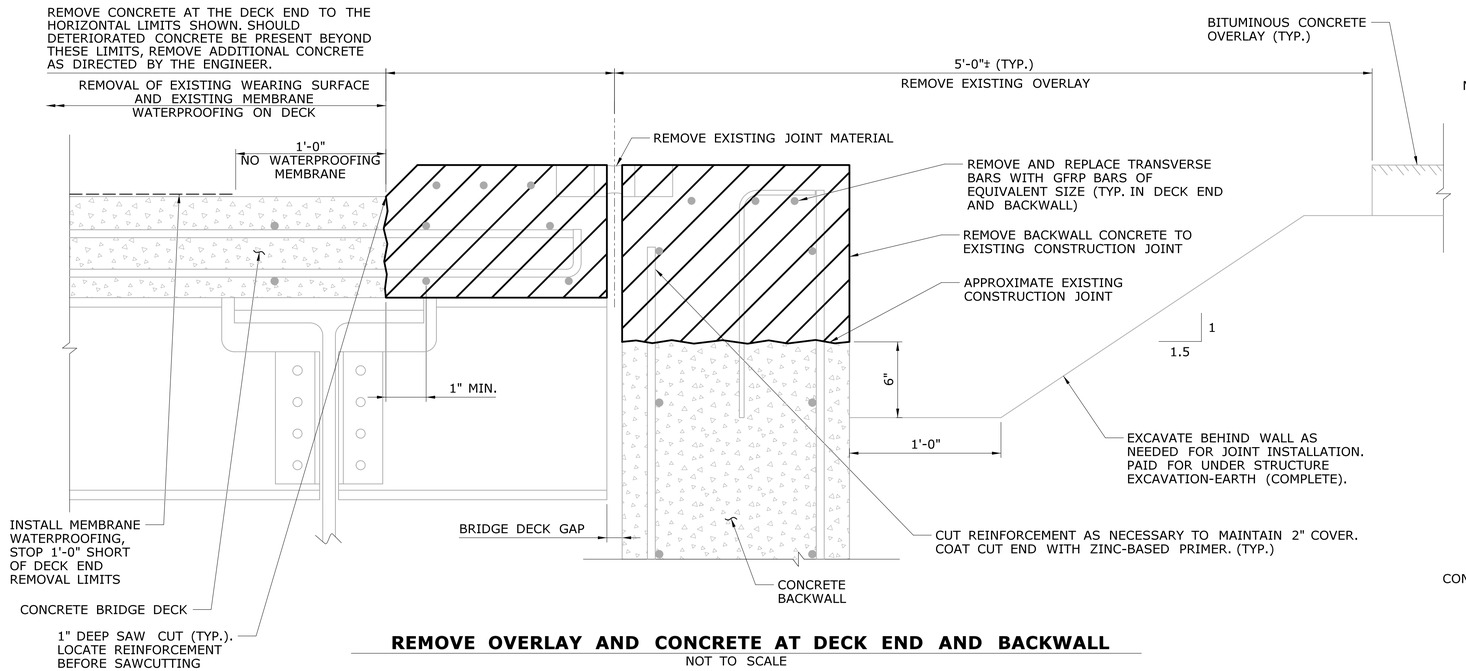

REMOVE OVERLAY AND CONCRETE AT DECK END AND BACKWALL

NOT TO SCALE

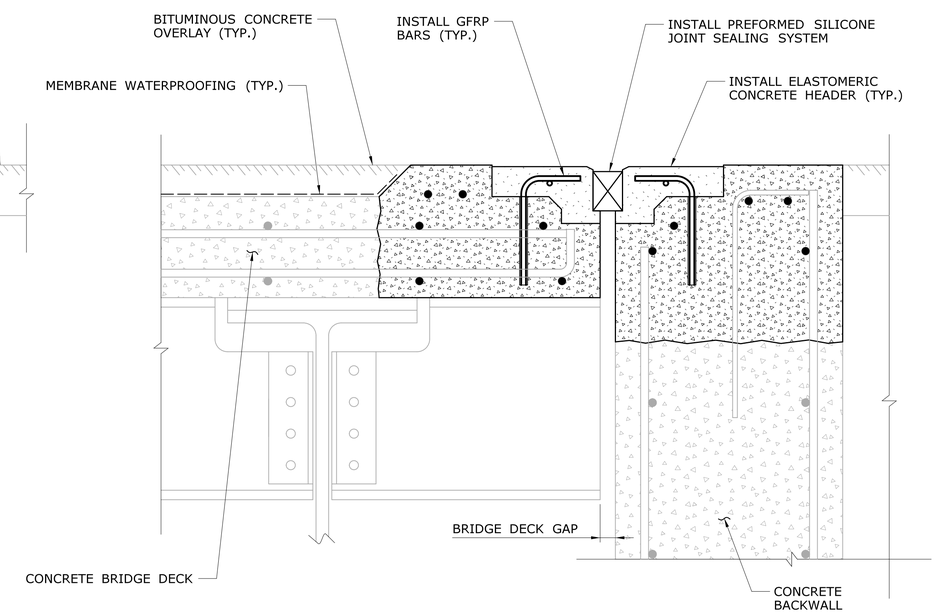

CONSTRUCT HEADERS AND INSTALL JOINT SEAL

NOT TO SCALE

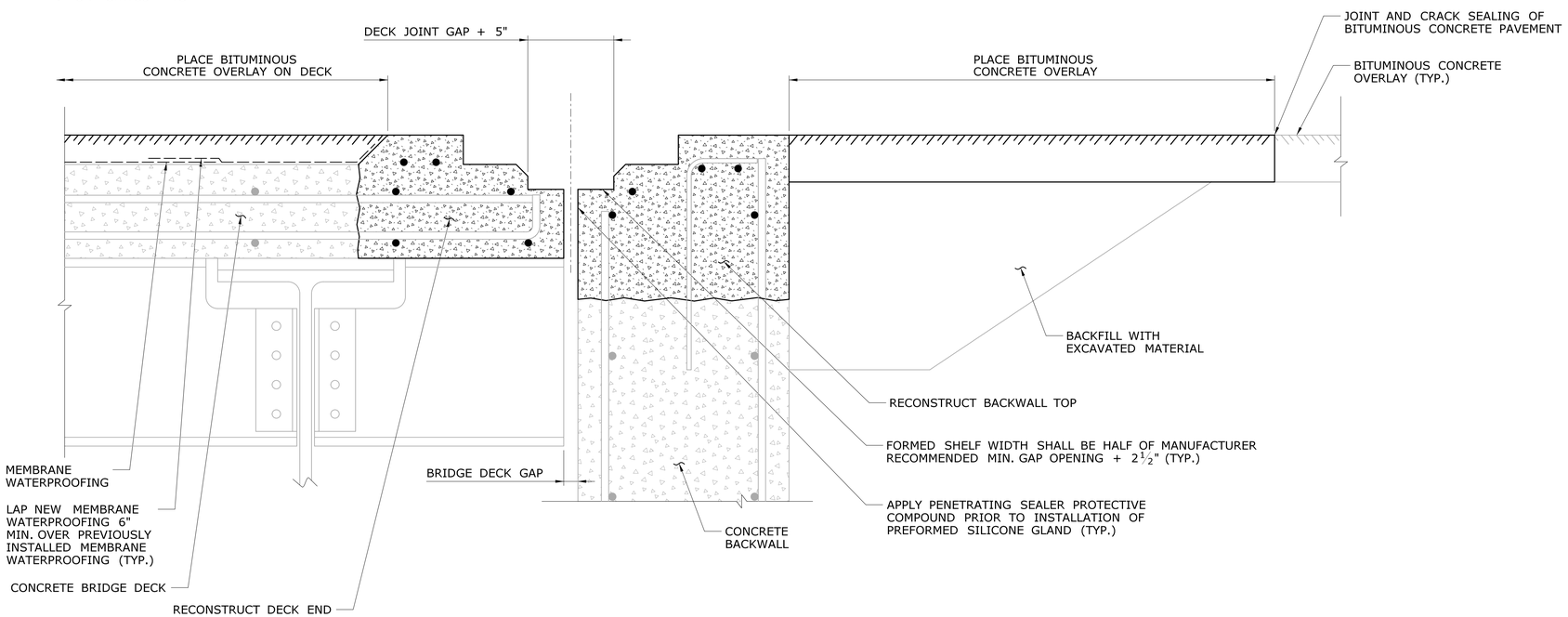

RECONSTRUCT DECK END AND BACKWALL AND RESTORE OVERLAY

NOT TO SCALE

NOTE: FOR DETAIL OF COMPLETED HEADERS AND PREFORMED JOINT SEAL, SEE SECTION 1 ON S-06.

NOTES:

1) DETERIORATED CONCRETE SHALL BE REMOVED TO SOUND CONCRETE. SHOULD REINFORCEMENT BE ENCOUNTERED DURING CONCRETE REMOVAL, CONCRETE SHALL BE REMOVED TO A MINIMUM OF 1 INCH BEYOND REINFORCEMENT.

PROPOSED SEQUENCE FOR DECK PREPARATION FOR INSTALLATION OF ELASTOMERIC CONCRETE HEADERS AND PREFORMED JOINT SEAL

REV.	DATE	REVISION DESCRIPTION	SHEET NO.

THE INFORMATION, INCLUDING ESTIMATED QUANTITIES OF WORK, SHOWN ON THESE SHEETS IS BASED ON LIMITED INVESTIGATIONS BY THE STATE AND IS IN NO WAY WARRANTED TO INDICATE THE CONDITIONS OF ACTUAL QUANTITIES OF WORK WHICH WILL BE REQUIRED.

Plotted Date: 12/17/2019

DESIGNER/DRAFTER: PAL
CHECKED BY: KAT
SCALE AS NOTED

STATE OF CONNECTICUT
DEPARTMENT OF TRANSPORTATION

Filename: ..\SB_MSH_0051_0272_EXP_JOINT03.dgn

SIGNATURE/BLOCK:
STATE OF CONNECTICUT — ROBERT J. FAHEY — No. 19382 — LICENSED PROFESSIONAL ENGINEER — 10/10/2019

CLOUGH, HARBOUR & ASSOCIATES, LLP
200 CORPORATE PL.
ROCKY HILL, CT 06067

PROJECT TITLE:
REHABILITATION OF BRIDGE NOS. 01487 & 03245 RTE 177 OVER FARMINGTON RIVER

TOWN: FARMINGTON

DRAWING TITLE: DECK END PREPARATION FOR ELASTOMERIC CONCRETE HEADERS

PROJECT NO. 51-272
DRAWING NO. S-08
SHEET NO. 05.08

BITUMINOUS CONCRETE PLACEMENT AT ASPHALTIC PLUG JOINTS (APJ)

1. THE REQUIREMENTS OF SPECIAL PROVISION SECTION 4.06 SHALL BE MET EXCEPT IN LIEU OF DENSITY TESTING, THE METHODS DESCRIBED BELOW SHALL BE FOLLOWED TO ASSURE PROPER COMPACTION OF THE BITUMINOUS CONCRETE PAVEMENT PLACED ADJACENT TO BRIDGE JOINTS ONLY.

2. LIFTS MUST BE UNIFORM THICKNESS.

3. REQUIREMENTS FOR PROPER COMPACTION:

   a. MINIMUM 265° F DELIVERY TEMPERATURE OF MATERIAL. PLACE AND SPREAD MATERIAL BEFORE IT COOLS TO 260° F. MATERIAL BELOW TEMPERATURE REQUIREMENT WILL BE REJECTED.

   b. COMPACT NON-SURFACE LIFTS WITH VIBRATORY PLATE COMPACTOR MEETING THE FOLLOWING REQUIREMENTS:

      i. DESIGNED TO COMPACT ASPHALT
      ii. EQUIPPED WITH A WATER TANK
      iii. CENTRIFUGAL FORCE 3200 LBS TO 6000 LBS
      iv. WEIGHS MINIMUM 160 LBS (WITHOUT WATER)
      v. MINIMUM 4400 VIBRATIONS PER MINUTE

   c. COMPACT TOP LIFT WITH 3 1/2 TO 4 1/2 TON DOUBLE DRUM ROLLER, DESIGNED TO COMPACT BITUMINOUS CONCRETE.

   d. PROVIDE NUMBER OF PASSES BASED ON LIFT THICKNESS AS FOLLOWS:

LIFT THICKNESS (INCHES)	NUMBER OF PASSES
1 1/4 TO 1 1/2	8
1 1 /2 TO 2	10
2 TO 2 1/2	12

e. ADDITIONAL COMPACTING EQUIPMENT MAY BE REQUIRED TO COMPLETE LIFT COMPACTION BEFORE MATERIAL COOLS TO 180° F.

f. AT CORNERS OR OTHER AREAS INACCESSIBLE TO PLATE TAMPER, HAND TAMP 20 TIMES MINIMUM BEFORE MATERIAL COOLS TO 180° F.

4. ALTERNATE EQUIPMENT MAY BE REQUESTED AS A SUPPLEMENT TO CONTRACTOR'S QC PLAN. THE EQUIPMENT AND PROCEDURES MUST BE APPROVED BY THE ENGINEER PRIOR TO USE.

5. IF THESE METHODS ARE NOT PERFORMED TO THE SATISFACTION OF THE ENGINEER, DENSITY VERIFICATION MAY BE REQUIRED WHEREIN THE CONTRACTOR SHALL PROVIDE DENSITY TESTING WITH A QC NUCLEAR DENSITY GAUGE OR COLLECT CORE SAMPLES AS SPECIFIED IN SECTION 4.06.

ASPHALTIC PLUG EXPANSION JOINT SYSTEM NOTES

1. A BRIDGING PLATE SHALL BE USED TO SPAN THE GAP BETWEEN THE DECK END AND THE BACKWALL.

2. NEW STEEL BRIDGING PLATES SHALL BE A MINIMUM OF 1/4" THICK BY 8" WIDE. FOR JOINT OPENINGS WHICH EXCEED 3", A 3/8" THICK BY 12" WIDE PLATE WILL BE REQUIRED

3. NO BRIDGING PLATE SHALL BE USED AT THE FOLLOWING LOCATIONS:
   A. JOINT BETWEEN A DECK END AND A CONCRETE APPROACH PAVEMENT
   B. WHERE A BRIDGE DECK END MEETS A BITUMINOUS APPROACH PAVEMENT

4. THE REMOVAL OF ALL EXISTING JOINT SYSTEMS, BITUMINOUS CONCRETE OVERLAY, MEMBRANE WATERPROOFING AND BOND BREAKER WITHIN THE LIMITS SHOWN TO BE INCLUDED FOR PAYMENT UNDER THE ITEM "REMOVAL OF EXISTING WEARING SURFACE".

5. TEMPORARY CLOSED CELL BACKER ROD DIAMETER SHALL BE DETERMINED AFTER MEASURING THE JOINT OPENING, THE ROD SHALL BE 25% LARGER THAN THE JOINT OPENING.

6. INSTALLATION OF MEMBRANE WITHIN THE LIMITS SHOWN TO BE PAID UNDER THE ITEM, "MEMBRANE WATERPROOFING (WOVEN GLASS FABRIC)".

7. THE FURNISHING AND PLACING OF PMA S0.375 AND HMA S0.25 TO BE INCLUDED FOR PAYMENT UNDER THE ITEMS "PMA S0.375" AND "HMA S0.25".

8. SAW-CUTTING AND REMOVAL OF PAVEMENT FOR JOINT INSTALLATION TO BE INCLUDED FOR PAYMENT UNDER THE ITEM "ASPHALTIC PLUG EXPANSION JOINT SYSTEM".

9. INSTALLATION OF FOAM SUPPORTED SILICONE GLAND TO BE PAID UNDER THE ITEM "PREFORMED JOINT SEAL".

10. ASPHALTIC PLUG EXPANSION JOINT SYSTEMS MAY BE INSTALLED ONLY WITHIN THE TEMPERATURE RANGE SPECIFIED IN THE SPECIAL PROVISION "ASPHALTIC PLUG EXPANSION JOINT SYSTEM". REFERENCE THE RANGE OF THERMAL MOVEMENT FOR THE SELECTED JOINT PRODUCT IN THE TABLE FOR "INSTALLATION RESTRICTIONS" IN THE SPECIAL PROVISION.

11. EXPLORATION OF PAVEMENT THICKNESS AND JOINT LOCATION TO BE INCLUDED IN THE GENERAL COST OF THE ITEM "REMOVAL OF EXISTING WEARING SURFACE".

12. CONTRACTOR SHALL NOTIFY THE DEPARTMENT IF THE EXISTING PAVEMENT IS DETERMINED TO BE LESS THAN 2" OR GREATER THAN 6" WITHIN THE BRIDGE LIMITS.

13. THE FOAM SUPPORTED SILICONE SEAL MUST EXTEND INTO THE SIDEWALKS, REFER TO SHEET S-07 FOR DETAILS. THE SIDEWALK ENDS DO NOT NEED TO BE RECONSTRUCTED TO BUILD A SEAT FOR THE SILICONE SEAL FOR THE SOUTH FIXED ASPHALTIC PLUG JOINT, THIS IS ONLY REQUIRED FOR THE NORTH EXPANSION JOINT.

JOINT WORK FOR BRIDGES

1. ALL WORK TO REMOVE BITUMINOUS CONCRETE OVERLAY, MEMBRANE WATERPROOFING, EXISTING JOINT COMPONENTS AND SEALING ELEMENTS, SHALL BE INCLUDED IN THE COST OF "REMOVAL OF EXISTING WEARING SURFACE".

2. WHERE EXISTING BRIDGE DECK JOINTS ARE CONCEALED BENEATH BITUMINOUS CONCRETE OVERLAY THE CONTRACTOR SHALL VERIFY THE BRIDGE DECK JOINT LOCATION AND SUBMIT THE LIMITS OF SAW-CUTTING FOR THE ENGINEERS APPROVAL.

3. THE FURNISHING AND PLACING OF TEMPORARY PAVEMENT IN THE JOINT CUT-OUT SHALL CONFORM TO "BITUMINOUS CONCRETE PLACEMENT AT ASPHALTIC PLUG JOINTS (APJ)" AND SHALL BE INCLUDED FOR PAYMENT UNDER THE ITEMS "PMA S0.375" AND "HMA S0.25".

4. MEMBRANE WATERPROOFING SHALL BE "MEMBRANE WATERPROOFING (WOVEN GLASS FABRIC)" AND SHALL BE PLACED PRIOR TO PLACEMENT OF PAVEMENT OVERLAY.

5. ROUGH OR DAMAGED CONCRETE DECK SURFACES SHALL BE REPAIRED WITH A CONCRETE LEVELING MATERIAL INCLUDED FOR PAYMENT UNDER THE ITEM "ASPHALTIC PLUG EXPANSION JOINT SYSTEM".

6. THE DEPTH OF PROPOSED ASPHALTIC PLUG JOINT IS ESTIMATED TO BE 2 1/2" AVERAGE.

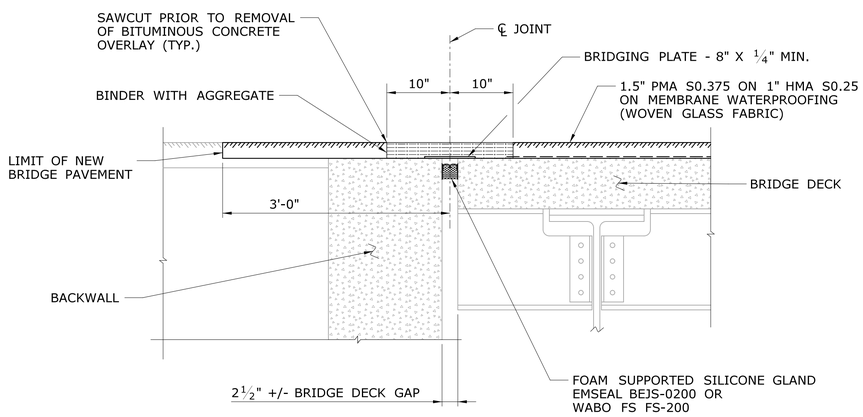

TYPICAL SECTION
ASPHALTIC PLUG EXPANSION JOINT SYSTEM
NOT TO SCALE

REV.	DATE	REVISION DESCRIPTION	SHEET NO.

THE INFORMATION, INCLUDING ESTIMATED QUANTITIES OF WORK, SHOWN ON THESE SHEETS IS BASED ON LIMITED INVESTIGATIONS BY THE STATE AND IS IN NO WAY WARRANTED TO INDICATE THE CONDITIONS OF ACTUAL QUANTITIES OF WORK WHICH WILL BE REQUIRED.

Plotted Date: 12/17/2019

DESIGNER/DRAFTER: PAL
CHECKED BY: KAT
SCALE AS NOTED

STATE OF CONNECTICUT
DEPARTMENT OF TRANSPORTATION

Filename: ...\SB_MSH_0051_0272_APJ01.dgn

SIGNATURE/BLOCK:
STATE OF CONNECTICUT LICENSED PROFESSIONAL ENGINEER No. 19382 10/18/2019

CLOUGH, HARBOUR & ASSOCIATES, LLP
200 CORPORATE PL.
ROCKY HILL, CT 06067

PROJECT TITLE:
REHABILITATION OF BRIDGE NOS. 01487 & 03245 RTE 177 OVER FARMINGTON RIVER

TOWN: **FARMINGTON**

DRAWING TITLE: **ASPHALTIC PLUG EXPANSION JOINT NOTES AND DETAILS**

PROJECT NO. 51-272
DRAWING NO. S-09
SHEET NO. 05.09

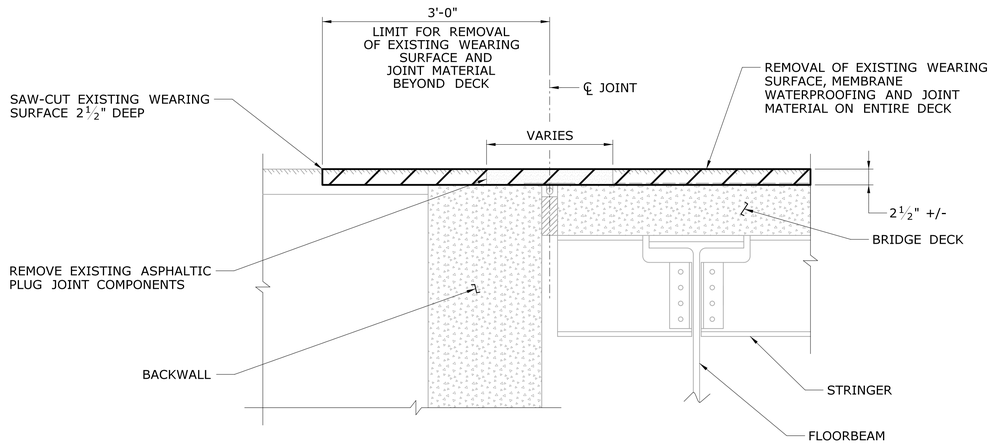

SUGGESTED STEPS 1-3
JOINT AND PAVEMENT REMOVAL
N.T.S.

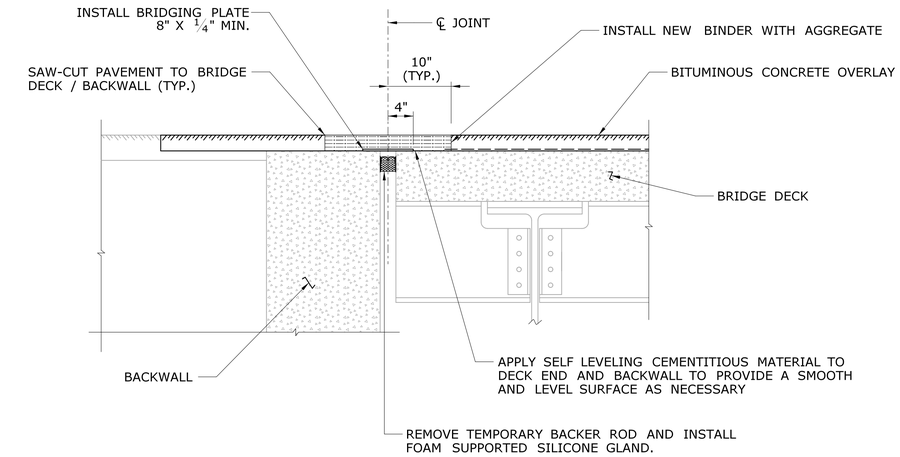

SUGGESTED STEPS 10-12
INSTALL ASPHALTIC PLUG EXPANSION JOINT SYSTEM
N.T.S.

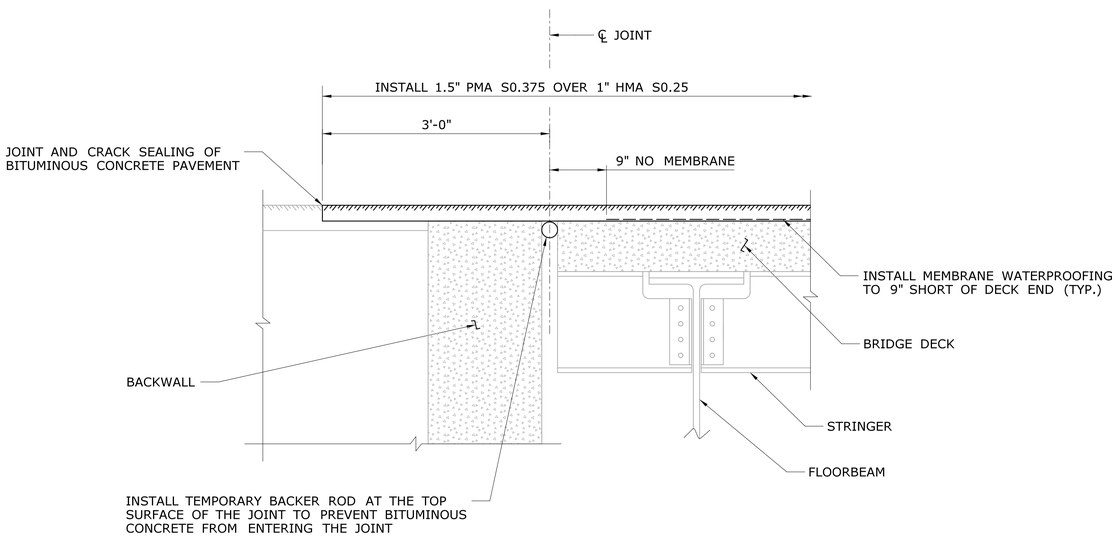

SUGGESTED STEPS 4-9
PAVEMENT AND MEMBRANE INSTALLATION
N.T.S.

SUGGESTED SEQUENCE OF WORK

STEP 1: CONTRACTOR SHALL PERFORM AN EXPLORATION AT THE GUTTERLINE (AT THE FOUR CORNERS OF THE BRIDGE) AND THE CROWN (AT THE BEGINNING AND END OF THE BRIDGE). A MINIMUM OF SIX REPRESENTATIVE DEPTH MEASUREMENTS SHALL BE TAKEN PER BRIDGE AT THESE LOCATIONS TO DETERMINE THE DEPTH OF PAVEMENT AND THE LOCATION OF THE DECK ENDS (CENTERLINE OF PROPOSED JOINT). ADDITIONAL MEASUREMENTS SHALL BE TAKEN IF NEEDED IN ACCORDANCE WITH SPECIAL PROVISION FOR "REMOVAL OF EXISTING WEARING SURFACE." CONTRACTOR SHALL ALSO MEASURE THE DECK JOINT GAP OPENING FOR SIZING OF THE FOAM SUPPORTED SILICONE GLAND.

STEP 2: SAW-CUT THE BITUMINOUS PAVEMENT TO THE LIMITS SHOWN IN DETAIL FOR "JOINT AND PAVEMENT REMOVAL." TO BE PAID FOR UNDER ITEM "REMOVAL OF EXISTING WEARING SURFACE".

STEP 3: REMOVE THE EXISTING PAVEMENT MATERIAL AND JOINT MATERIAL FULL DEPTH WITHIN THE LIMITS SHOWN TO BE PAID UNDER THE ITEM "REMOVAL OF EXISTING WEARING SURFACE".

STEP 4: INSTALL TEMPORARY BACKER ROD FLUSH WITH THE BRIDGE DECK AND BACKWALL.

STEP 5: REPAIR DETERIORATED CONCRETE AS DETERMINED BY THE ENGINEER TO BE PAID UNDER "PARTIAL DEPTH PATCH" OR "FULL DEPTH PATCH (HIGH EARLY STRENGTH)".

STEP 6: INSTALL MEMBRANE WATERPROOFING TO THE TOP OF THE DECK WITHIN THE LIMITS SHOWN.

STEP 7: PLACE CRACK SEALANT ON VERTICAL EDGE OF PAVEMENT ALONG SAW-CUT LINES AND STAGE CONSTRUCTION SAW-CUT LINES.

STEP 8: PLACE BITUMINOUS CONCRETE OVERLAY AS INDICATED ON THE PLANS.

STEP 9: PLACE CRACK SEALANT ON THE HORIZONTAL SURFACE AT PAVEMENT CUT-OUT JOINTS.

STEP 10: SAW-CUT PAVEMENT FULL DEPTH AT 10" FROM THE CENTER OF THE JOINT (BOTH SIDES OF JOINT) AND REMOVE ALL PAVEMENT MATERIAL BETWEEN SAW-CUTS INCLUDING THE TEMPORARY BACKER ROD. TO BE PAID UNDER THE ITEM "ASPHALTIC PLUG JOINT EXPANSION SYSTEM".

STEP 11: INSTALL PROPOSED ASPHALTIC PLUG EXPANSION JOINT SYSTEM WITH FOAM SUPPORTED SILICONE GLAND AND BRIDGING PLATE. LOCATING PINS SHALL NOT BE USED TO SECURE THE BRIDGING PLATE.

STEP 12: PLACE CRACK SEAL AT CURB LINE ALONG THE LENGTH OF THE BRIDGE, BOTH SIDES. CRACK SEALING SHALL BE INCLUDED FOR PAYMENT UNDER ITEM "JOINT AND CRACK SEALING OF BITUMINOUS CONCRETE PAVEMENT."

INSTALLATION OF ASPHALTIC PLUG JOINT WITH BRIDGING PLATE
N.T.S.

A
-

REV.	DATE	REVISION DESCRIPTION	SHEET NO.

THE INFORMATION, INCLUDING ESTIMATED QUANTITIES OF WORK, SHOWN ON THESE SHEETS IS BASED ON LIMITED INVESTIGATIONS BY THE STATE AND IS IN NO WAY WARRANTED TO INDICATE THE CONDITIONS OF ACTUAL QUANTITIES OF WORK WHICH WILL BE REQUIRED.

Plotted Date: 12/17/2019

DESIGNER/DRAFTER: PAL
CHECKED BY: KAT
SCALE AS NOTED

STATE OF CONNECTICUT
DEPARTMENT OF TRANSPORTATION

Filename: ...\SB_MSH_0051_0272_APJ02.dgn

SIGNATURE/BLOCK:
STATE OF CONNECTICUT · STEPHEN J. FAHEY · No. 18382 · LICENSED PROFESSIONAL ENGINEER · 12/18/2019

CLOUGH, HARBOUR & ASSOCIATES, LLP
200 CORPORATE PL.
ROCKY HILL, CT 06067

PROJECT TITLE:
REHABILITATION OF BRIDGE NOS. 01487 & 03245 RTE 177 OVER FARMINGTON RIVER

TOWN: FARMINGTON

DRAWING TITLE: ASPHALTIC PLUG JOINT INSTALLATION SEQUENCE

PROJECT NO. 51-272
DRAWING NO. S-10
SHEET NO. 05.10

RAILING NOTES:

1. THE EXISTING BASE PLATE, POSTS, W-BEAM RAILING AND MOUNTING HARDWARE SHALL BE REMOVED. THE EXISTING THREADED INSERTS CAST IN THE CONCRETE CURBS SHALL REMAIN AND SHALL BE REUSED FOR MOUNTING THE NEW POSTS.
2. RAIL POST, BLOCKOUT, AND BASE PLATES SHALL CONFORM TO THE REQUIREMENTS OF AASHTO M270 GRADE 50.
3. ALL STEEL SHAPES SHALL BE GALVANIZED IN ACCORDANCE WITH ASTM A123 AND ALL HARDWARE SHALL BE GALVANOZED IN ACCORDANCE WITH ASTM A153.
4. THE BOLT SECURING THE POST BASE PLATE TO THE CONCRETE SHALL BE TIGHTENED TO A SNUG FIT AND GIVEN AN ADDITIONAL 1/8 TURN AFTER STEEL IS IN PLACE.
5. ALL POSTS TO BE PLUMB WHEN PROFILE GRADE EXCEEDS 1.5%. FOR PROFILE GRADES LESS THAN 1.5%, POSTS SHALL BE SET PERPENDICULAR TO GRADE.
6. POST FLANGE WELD DOES NOT REQUIRE MAGNETIC PARTICLE TESTING. WELD SHALL BE BACK-GOUGED ON BACK SIDE EXCEPT AT WEB. WELD IS THE SAME ON BOTH FLANGES.
7. ALL EXISTING DIMENSIONS SHALL BE FIELD VERIFIED PRIOR TO FABRICATION.
8. CONTRACTOR SHALL NOTIFY THE ENGINEER IF THE EXISTING THREADED INSERTS ARE DETERMINED TO BE UNSUITABLE FOR REUSE. THE ENGINEER WILL PROVIDE AN ALTERNATE MOUNTING DETAIL.

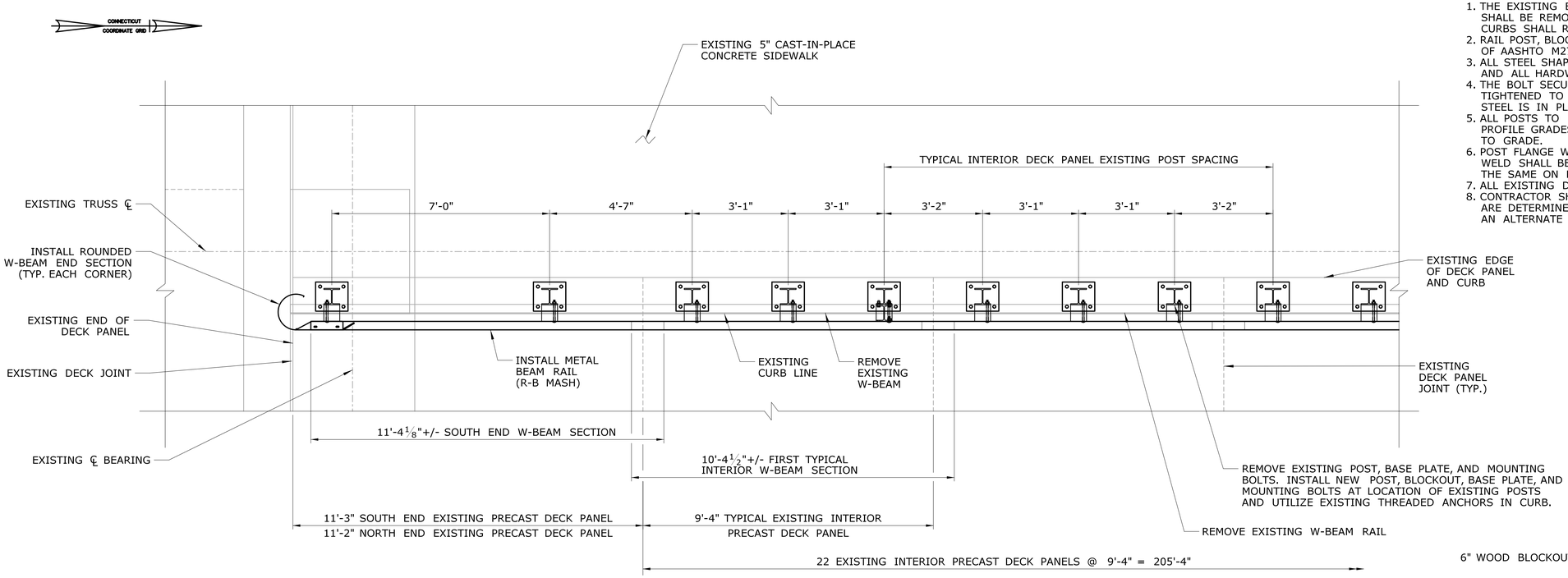

NOTE:
1. SOUTHWEST CORNER SHOWN, LAYOUT AT ALL FOUR CORNERS AND FOR ALL 9'-4" WIDE INTERIOR DECK PANELS IS TYPICAL.

TYPICAL POST LAYOUT PLAN
SCALE: 1 1/2" = 1'-0"

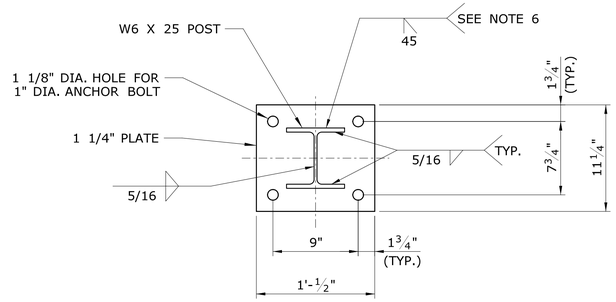

POST BASEPLATE DETAIL
SCALE: 1 1/2" = 1'-0"

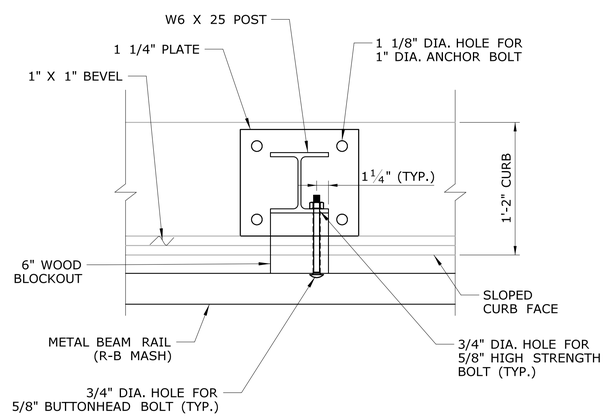

POST PLAN
SCALE: 1 1/2" = 1'-0"

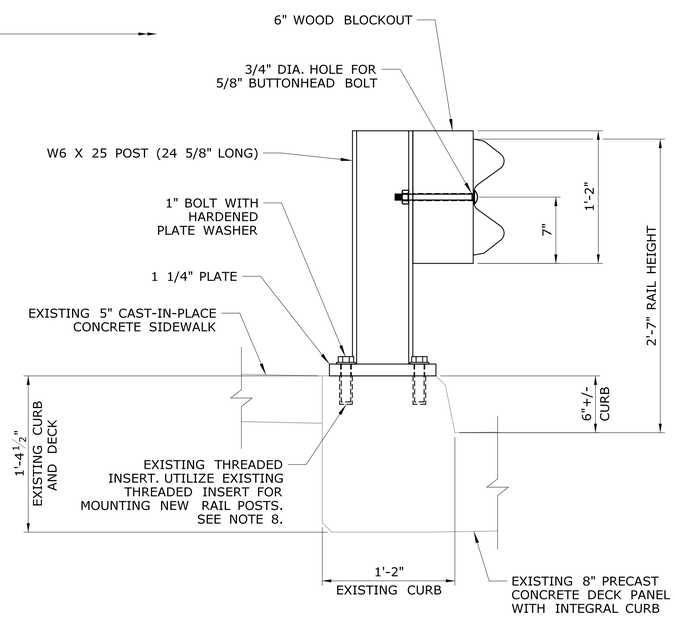

RAIL POST SECTION
SCALE: 1 1/2" = 1'-0"

REV.	DATE	REVISION DESCRIPTION	SHEET NO.
-	-	-	-
-	-	-	-
-	-	-	-
-	-	-	-
-	-	-	-
-	-	-	-

THE INFORMATION, INCLUDING ESTIMATED QUANTITIES OF WORK, SHOWN ON THESE SHEETS IS BASED ON LIMITED INVESTIGATIONS BY THE STATE AND IS IN NO WAY WARRANTED TO INDICATE THE CONDITIONS OF ACTUAL QUANTITIES OF WORK WHICH WILL BE REQUIRED.

Plotted Date: 12/17/2019

DESIGNER/DRAFTER: **PAL**
CHECKED BY: **KAT**
SCALE AS NOTED

STATE OF CONNECTICUT
DEPARTMENT OF TRANSPORTATION

Filename: ...\SB_MSH_0051_0272_MBR-RB-MASH01.dgn

SIGNATURE/BLOCK:
STATE OF CONNECTICUT PAUL A. LISCIOTTI No. 19382 LICENSED PROFESSIONAL ENGINEER
10/18/2019

CLOUGH, HARBOUR & ASSOCIATES, LLP
200 CORPORATE PL.
ROCKY HILL, CT 06067

PROJECT TITLE:
REHABILITATION OF BRIDGE NOS. 01487 & 03245 RTE 177 OVER FARMINGTON RIVER

TOWN: **FARMINGTON**

DRAWING TITLE: **MBR (RB-MASH) DETAILS (1 OF 2)**

PROJECT NO. **51-272**
DRAWING NO. **S-11**
SHEET NO. **05.11**

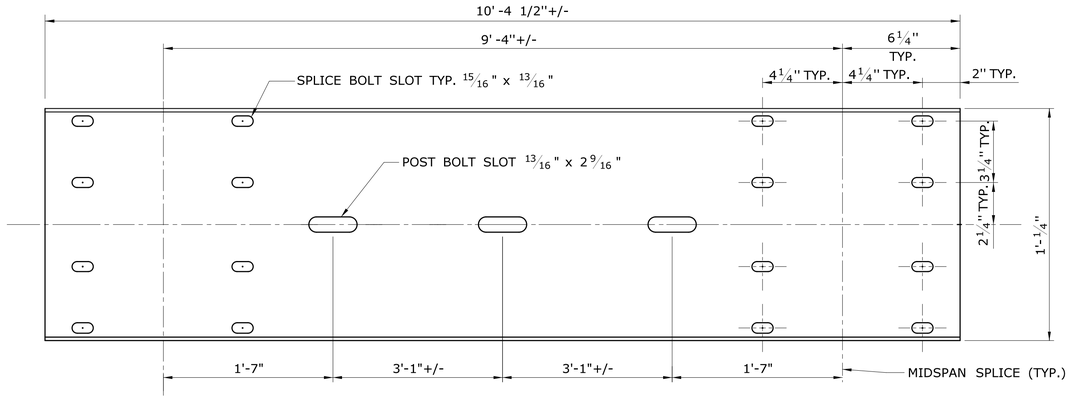

FRONT ELEVATION VIEW AT TYPICAL INTERIOR W-BEAM SECTION

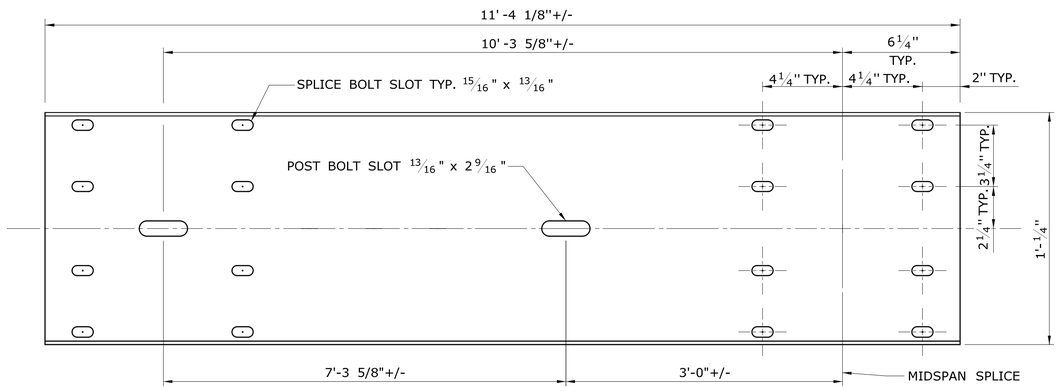

FRONT ELEVATION VIEW AT SOUTH END W-BEAM SECTION

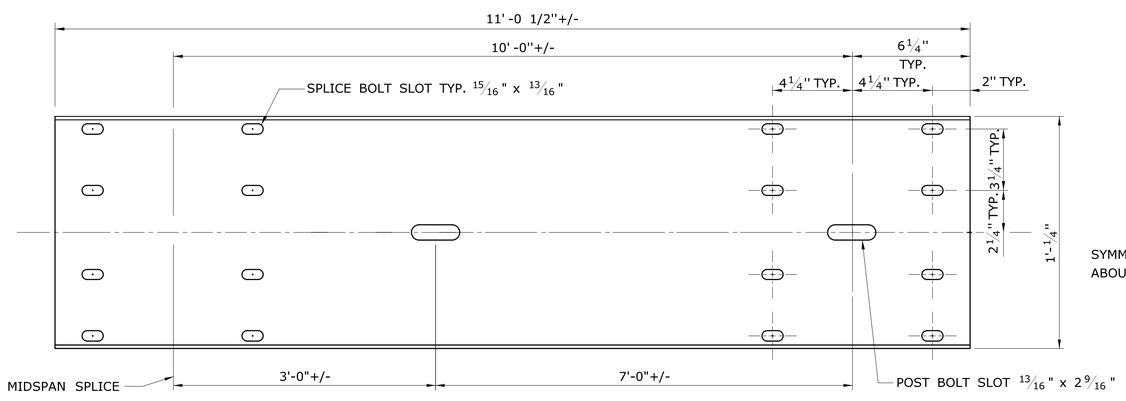

FRONT ELEVATION VIEW AT NORTH END W-BEAM SECTION

TYPICAL W-BEAM RAIL SECTIONS

NOT TO SCALE

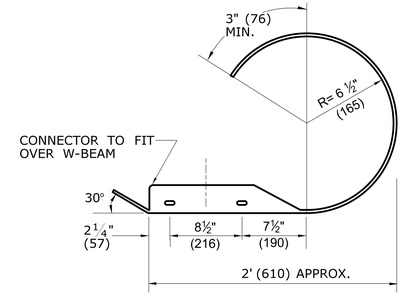

PLAN

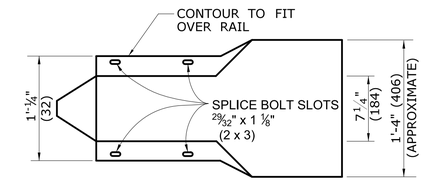

ELEVATION

ROUNDED W-BEAM END SECTION

NOT TO SCALE

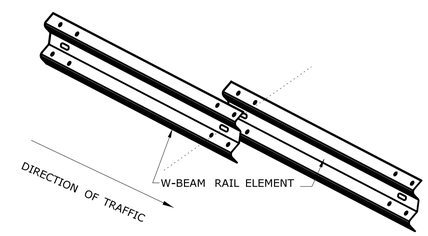

LAP W-BEAM RAIL SECTIONS

NOT TO SCALE

NOTE: EIGHT (8) SPLICE BOLTS PER JOINT

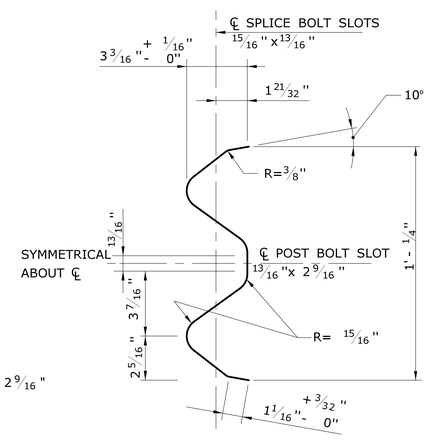

W-BEAM SECTION VIEW

NOT TO SCALE

GENERAL NOTES:

1. W-BEAM GUIDERAIL SHALL USE CLASS A (12 GAUGE), TYPE II W-BEAM RAIL ELEMENTS.
2. STEEL POSTS (W6 X 25) ARE TO BE INSTALLED AT THE LOCATIONS OF THE EXISTING POSTS AND SHALL UTILIZE THE EXISTING THREADED INSERTS IN THE CURB.
3. ALL DIMENSIONS SUBJECT TO MANUFACTURING TOLERANCES.

W-BEAM DELINEATOR INSTALLATION NOTES:

1. INSTALL W-BEAM DELINEATORS ON RAIL THAT IS PARALLEL TO AND NOT GREATER THAN 8' FROM THE EDGE OF THE ROADWAY. A MINIMUM OF THREE W-BEAM DELINEATORS SHALL BE INSTALLED ON ANY LENGTH OF GUIDERAIL.
2. THE SPACING OF W-BEAM DELINEATORS IS 50 FEET, INSTALLED AT RAIL SPLICE LOCATIONS. SPACING IS 25 FEET ON RADII LESS THAN 300 FEET.
3. NO W-BEAM DELINEATORS ARE PERMITTED WITHIN 75 FEET OF THE IMPACT HEAD OF ANY TANGENTIAL OR FLARED IMPACT ATTENUATION SYSTEM.
4. RETROREFLECTIVE SHEETING SHALL BE WHITE EXCEPT ON THE LEFT SIDE OF DIVIDED STREETS, HIGHWAYS, RAMPS, AND ONE WAY ROADS IN THE DIRECTION OF TRAVEL WHERE IT SHALL BE YELLOW.

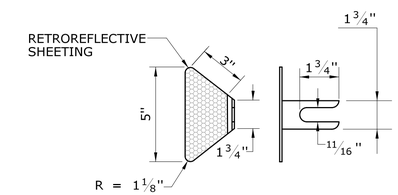

W-BEAM DELINEATOR

NOT TO SCALE

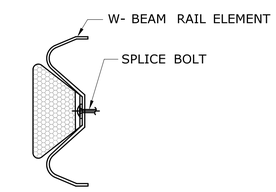

W-BEAM DELINEATOR INSTALLATION

NOT TO SCALE

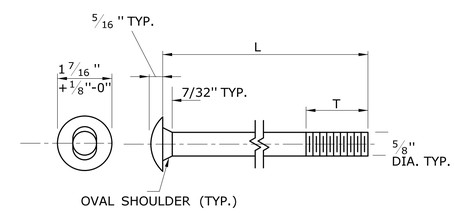

BUTTONHEAD BOLT

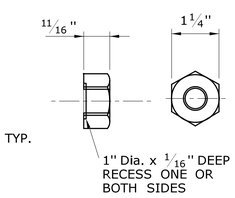

HEX NUT

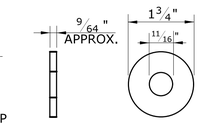

WASHER
[FWC16a]

DESIGNATOR	L	T	INTENDED USE
FBB01	1-1/4"	1-1/8"	RAIL SPLICE BOLTS
FBB02	8"	4"	W-BEAM TO 6" WOOD BLOCKOUT BOLTS

5/8" BUTTON HEAD BOLT(S) AND RECESSED NUT(S)

NOT TO SCALE

NOTE: AFTER GALVANIZING, THE NUT SHALL BE FREE RUNNING ON THE BOLT. DIAMETER SHOWN IS TYPICAL FOR ALL GUIDERAIL BOLTS. SEE DETAILS ABOVE FOR SPECIFIC LENGTHS.

REV.	DATE	REVISION DESCRIPTION	SHEET NO.
-	-	-	-
-	-	-	-
-	-	-	-
-	-	-	-
-	-	-	-
-	-	-	-

THE INFORMATION, INCLUDING ESTIMATED QUANTITIES OF WORK, SHOWN ON THESE SHEETS IS BASED ON LIMITED INVESTIGATIONS BY THE STATE AND IS IN NO WAY WARRANTED TO INDICATE THE CONDITIONS OF ACTUAL QUANTITIES OF WORK WHICH WILL BE REQUIRED.

Plotted Date: 12/17/2019

DESIGNER/DRAFTER: PAL
CHECKED BY: KAT
SCALE AS NOTED

STATE OF CONNECTICUT
DEPARTMENT OF TRANSPORTATION

Filename: ...\SB_MSH_0051_0272_MBR-RB-MASH02.dgn

SIGNATURE/BLOCK:
STATE OF CONNECTICUT — JOSEPH A. CLOUGH — No. 19382 — LICENSED PROFESSIONAL ENGINEER — 10/18/2018

CLOUGH, HARBOUR & ASSOCIATES, LLP
200 CORPORATE PL.
ROCKY HILL, CT 06067

PROJECT TITLE:
REHABILITATION OF
BRIDGE NOS. 01487 & 03245
RTE 177 OVER FARMINGTON RIVER

TOWN: FARMINGTON

DRAWING TITLE: MBR (RB-MASH) DETAILS (2 OF 2)

PROJECT NO. 51-272
DRAWING NO. S-12
SHEET NO. 05.12

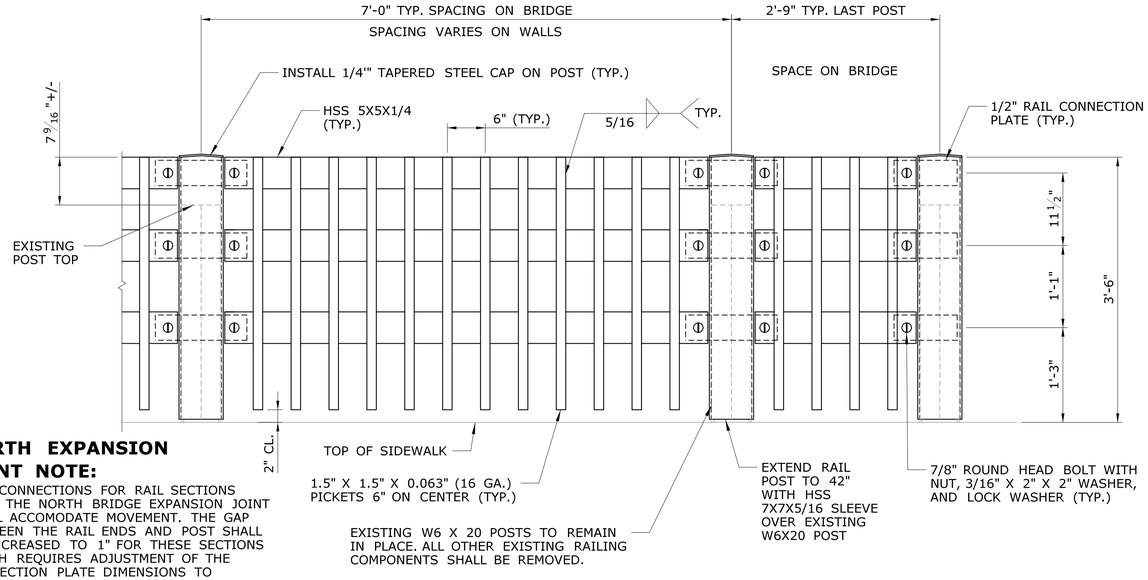

NORTH EXPANSION JOINT NOTE:

RAIL CONNECTIONS FOR RAIL SECTIONS OVER THE NORTH BRIDGE EXPANSION JOINT SHALL ACCOMODATE MOVEMENT. THE GAP BETWEEN THE RAIL ENDS AND POST SHALL BE INCREASED TO 1" FOR THESE SECTIONS WHICH REQUIRES ADJUSTMENT OF THE CONNECTION PLATE DIMENSIONS TO ACCOMODATE THE EXTRA 1/2". THE BOLTS SHALL BE INSTALLED SO MOVEMENT CAN OCCUR BETWEEN THE RAIL AND CONNECTION PLATE. A BOLT SLEEVE THAT IS 1/32" LONGER THAN THE CONNECTED PARTS MAY BE USED SO THE BOLTS CAN BE FULLY TIGHTENED WITHOUT RESTRAINING THE CONNECTED PARTS MOVEMENT. THE HOLES WILL NEED TO BE ENLARGED AS NEEDED TO ACCOMODATE THE SLEEVE. SLOTTED HOLES MUST BE USED IN THE CONNECTION PLATES, THE OPTION TO FIELD DRILL 15/16" HOLES IS NOT PERMITTED FOR THESE SECTIONS.

NOTE:
DETAIL SHOWN IS FOR MOUNTING OVER EXISTING POSTS. NEW RAILING ON NEW RETAINING WALL IS SIMILAR, SEE NEW POST DETAILS THIS SHEET FOR ADDITIONAL INFORMATION AND SEE RETAINING WALL DETAILS FOR POST LAYOUT.

METAL BRIDGE RAIL (HANDRAIL) ELEVATION

SCALE: 1" = 1'-0"

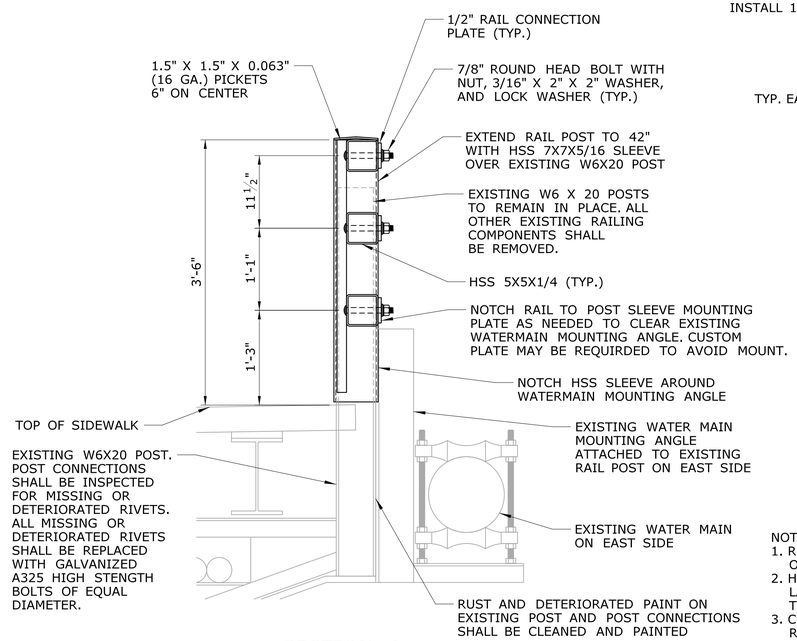

SECTION 1

SCALE: 1" = 1'-0"

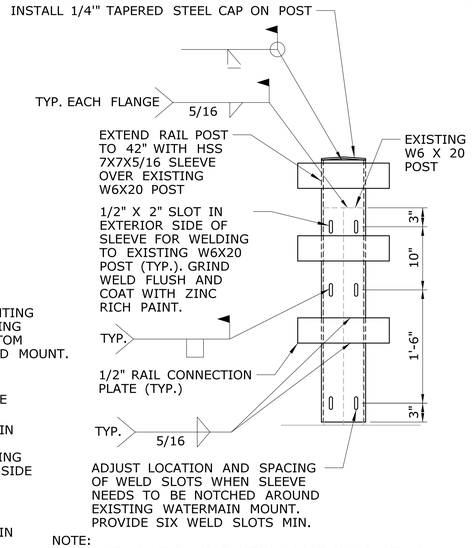

NOTE:
1. REMOVE PAINT FROM EXISTING POST IN LOCATIONS OF WELDS.
2. HIGH SPOTS ON THE EXISTING POST DUE TO THICK LAYERS OF PAINT, FLAKING PAINT, OR RUST MAY NEED TO BE GRINDED DOWN FOR POST SLEEVE TO FIT.
3. CORNERS OF EXISTING POST MAY NEED TO BE ROUNDED WITH A GRINDER FOR POST SLEEVE TO FIT.
4. WELDS SHOULD BE COMPLETED AFTER ATTACHING RAIL AND PICKET SECTION TO ALLOW ADJUSTMENTS AS NEEDED.

POST SLEEVE DETAIL

SCALE: 1" = 1'-0"

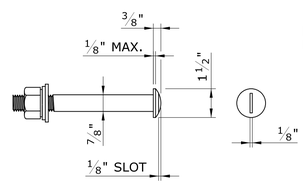

7/8" ROUND HEAD BOLT

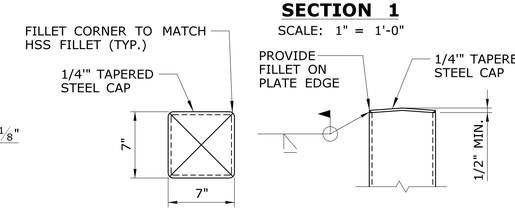

POST CAP DETAIL

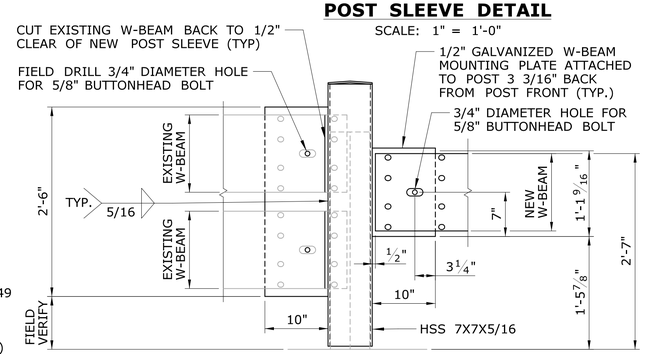

W-BEAM ATTACHMENT DETAIL (FRONT ELEVATION)

SCALE: 1" = 1'-0"

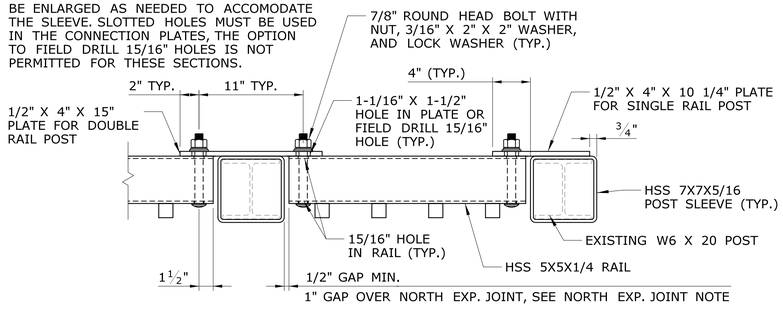

PLAN

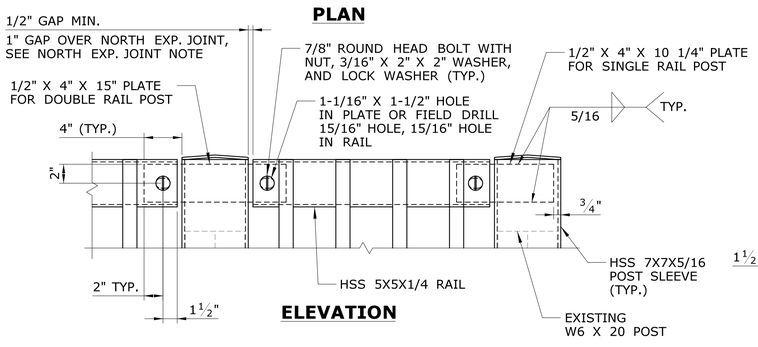

ELEVATION

RAIL TO POST SLEEVE CONNECTION DETAIL

SCALE: 1 1/2" = 1'-0"

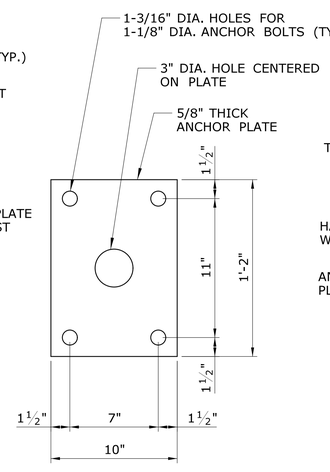

NEW POST ANCHOR PLATE

SCALE: 2" = 1'-0"

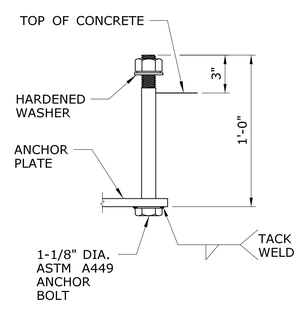

NEW POST ANCHOR BOLT

SCALE: 2" = 1'-0"

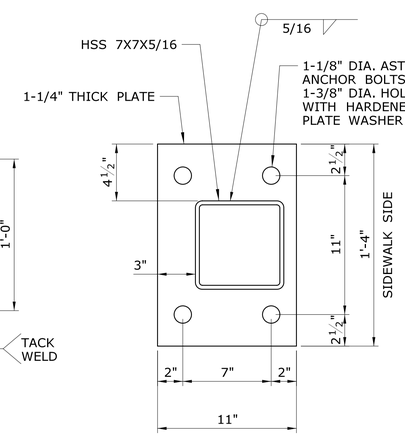

NEW POST BASE PLATE

SCALE: 2" = 1'-0"

RAILING NOTES:

1. RAIL POST AND BASE PLATES SHALL CONFORM TO THE REQUIREMENTS OF AASHTO M270 GRADE 50. HOLLOW RAILING STRUCTURAL TUBING (HSS) SHALL CONFORM TO THE REQUIREMENTS OF ASTM A500 WITH A CERTIFIED Fy = 50 KSI MINIMUM. ANCHOR PLATES SHALL CONFORM TO THE REQUIREMENTS OF AASHTO M270 GRADE 36. PICKET TUBING SHALL CONFORM TO ASTM A 513 WITH Fy = 36 KSI MIN. OR A500 GRADE B.
2. ALL STEEL SHALL BE GALVANIZED.
3. ANCHOR BOLTS SHALL BE SET WITH TEMPLATES. THE NUT SECURING THE POST BASE PLATE TO THE CONCRETE SHALL BE TIGHTENED TO A SNUG FIT AND GIVEN AN ADDITIONAL 1/8 TURN AFTER STEEL IS IN PLACE.
4. ENDS OF TUBE SECTIONS SHALL BE SAWED. GRIND SMOOTH EXPOSED EDGES. ALL CUT ENDS SHALL BE TRUE AND SMOOTH. RAIL TUBE SECTIONS SHALL BE CAPPED.
5. ALL POSTS TO BE PLUMB WHEN PROFILE GRADE EXCEEDS 1.5%. FOR PROFILE GRADES LESS THAN 1.5%, POSTS SHALL BE SET PERPENDICULAR TO GRADE.
6. POST FLANGE WELD DOES NOT REQUIRE MAGNETIC PARTICLE TESTING. WELD SHALL BE BACK-GOUGED ON BACK SIDE EXCEPT AT WEB. WELD IS THE SAME ON BOTH FLANGES.
7. 7/8" DIA. ROUND HEAD BOLTS SHALL CONFORM TO THE CHEMICAL AND PHYSICAL REQUIREMENTS OF AASHTO M 164.
8. ALL EXISTING DIMENSIONS SHALL BE FIELD VERIFIED PRIOR TO FABRICATION.
9. DAMAGED GALVANIZING FROM HANDLING AND WELDING SHALL BE REPAIRED PER ASTM A780.
10. RAILING SHALL BE PAINTED BLACK.

REV.	DATE	REVISION DESCRIPTION	SHEET NO.
-	-	-	-
-	-	-	-
-	-	-	-
-	-	-	-
-	-	-	-
-	-	-	-

THE INFORMATION, INCLUDING ESTIMATED QUANTITIES OF WORK, SHOWN ON THESE SHEETS IS BASED ON LIMITED INVESTIGATIONS BY THE STATE AND IS IN NO WAY WARRANTED TO INDICATE THE CONDITIONS OF ACTUAL QUANTITIES OF WORK WHICH WILL BE REQUIRED.

Plotted Date: 12/17/2019

DESIGNER/DRAFTER: PAL
CHECKED BY: KAT
SCALE AS NOTED

STATE OF CONNECTICUT
DEPARTMENT OF TRANSPORTATION

Filename: ...\SB_MSH_0051_0272_PED_RAIL.dgn

SIGNATURE/BLOCK:
STATE OF CONNECTICUT — STEPHEN J. FAY — No. 19382 — LICENSED PROFESSIONAL ENGINEER — 12/18/2019

CLOUGH, HARBOUR & ASSOCIATES, LLP
200 CORPORATE PL.
ROCKY HILL, CT 06067

PROJECT TITLE:
REHABILITATION OF BRIDGE NOS. 01487 & 03245 RTE 177 OVER FARMINGTON RIVER

TOWN: FARMINGTON

DRAWING TITLE: METAL BRIDGE RAIL (HANDRAIL) DETAILS

PROJECT NO. 51-272
DRAWING NO. S-13
SHEET NO. 05.13

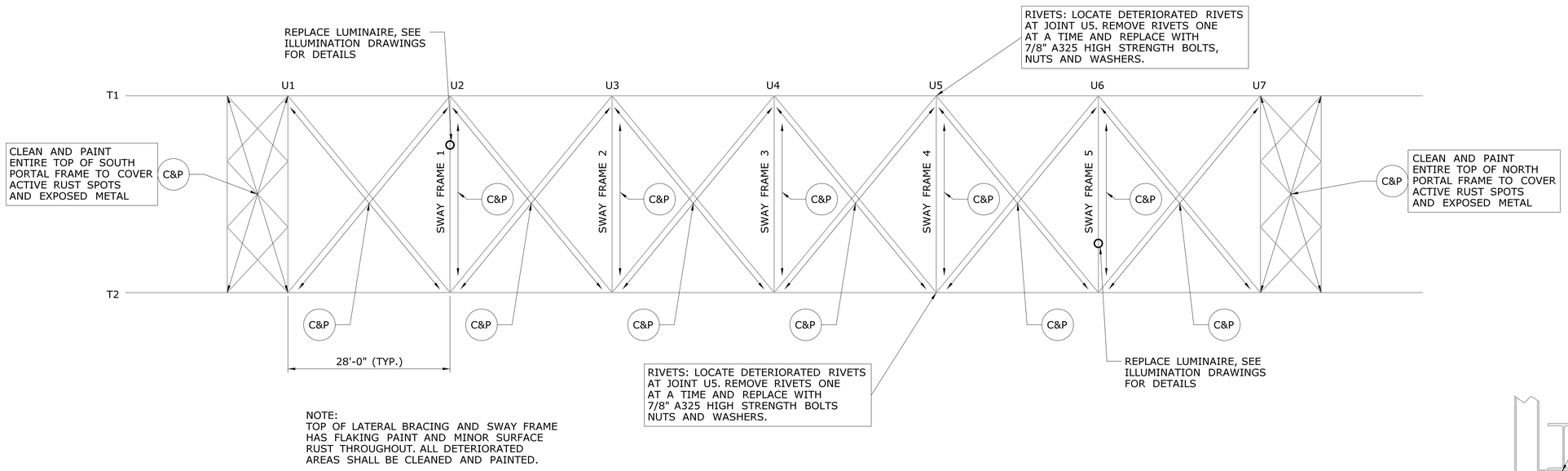

NOTE:
TOP OF LATERAL BRACING AND SWAY FRAME HAS FLAKING PAINT AND MINOR SURFACE RUST THROUGHOUT. ALL DETERIORATED AREAS SHALL BE CLEANED AND PAINTED.

SWAY FRAMING PLAN

SCALE: $^{3}/_{32}$" = 1'-0"

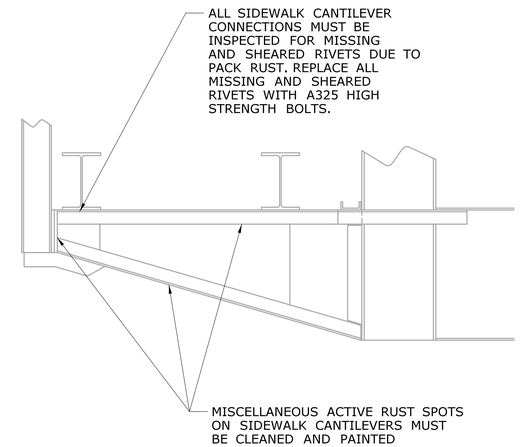

TYPICAL SIDEWALK CANTILEVER

SCALE: $^{3}/_{4}$" = 1'-0"

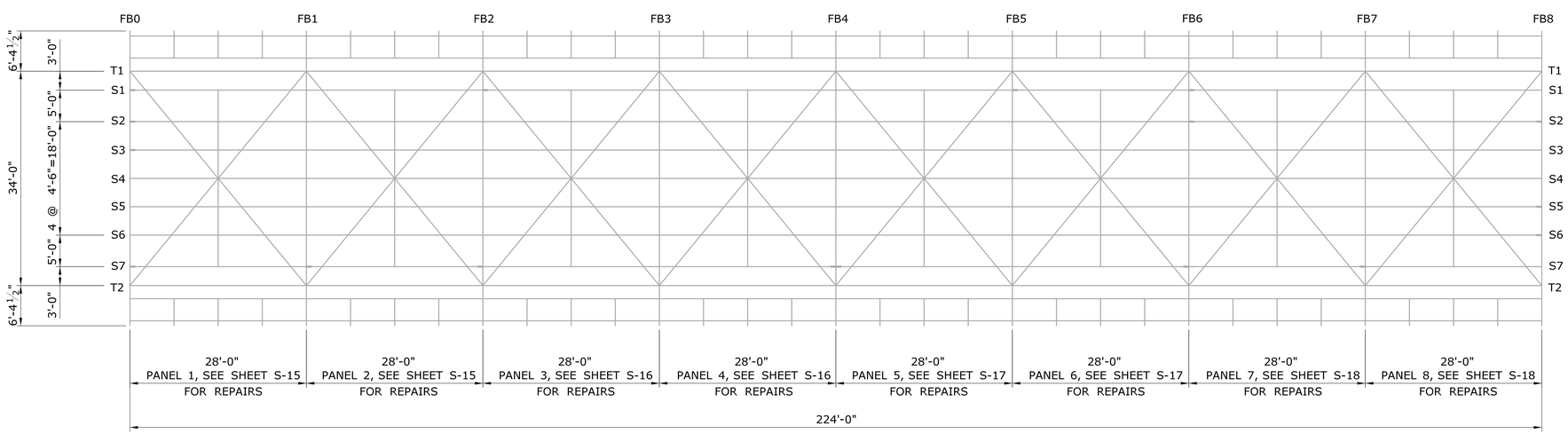

DECK FRAMING PLAN

SCALE: $^{3}/_{32}$" = 1'-0"

NOTE:

1. FOR STRUCTURAL STEEL NOTES, SEE DRAWING S-21.
2. FOR PAINTING NOTES, SEE DRAWING S-21.
3. C&P = CLEAN AND PAINT.

REV.	DATE	REVISION DESCRIPTION	SHEET NO.
-	-	-	-
-	-	-	-
-	-	-	-
-	-	-	-
-	-	-	-
-	-	-	-

THE INFORMATION, INCLUDING ESTIMATED QUANTITIES OF WORK, SHOWN ON THESE SHEETS IS BASED ON LIMITED INVESTIGATIONS BY THE STATE AND IS IN NO WAY WARRANTED TO INDICATE THE CONDITIONS OF ACTUAL QUANTITIES OF WORK WHICH WILL BE REQUIRED.

Plotted Date: 12/17/2019

DESIGNER/DRAFTER: **PAL**
CHECKED BY: **KAT**
SCALE AS NOTED

STATE OF CONNECTICUT
DEPARTMENT OF TRANSPORTATION

Filename: ...\SB_MSH_0051_0272_FRM.dgn

SIGNATURE/ BLOCK:

CLOUGH, HARBOUR & ASSOCIATES, LLP
200 CORPORATE PL.
ROCKY HILL, CT 06067

PROJECT TITLE:
REHABILITATION OF BRIDGE NOS. 01487 & 03245 RTE 177 OVER FARMINGTON RIVER

TOWN: **FARMINGTON**

DRAWING TITLE: **FRAMING PLANS**

PROJECT NO. **51-272**
DRAWING NO. **S-14**
SHEET NO. **05.14**

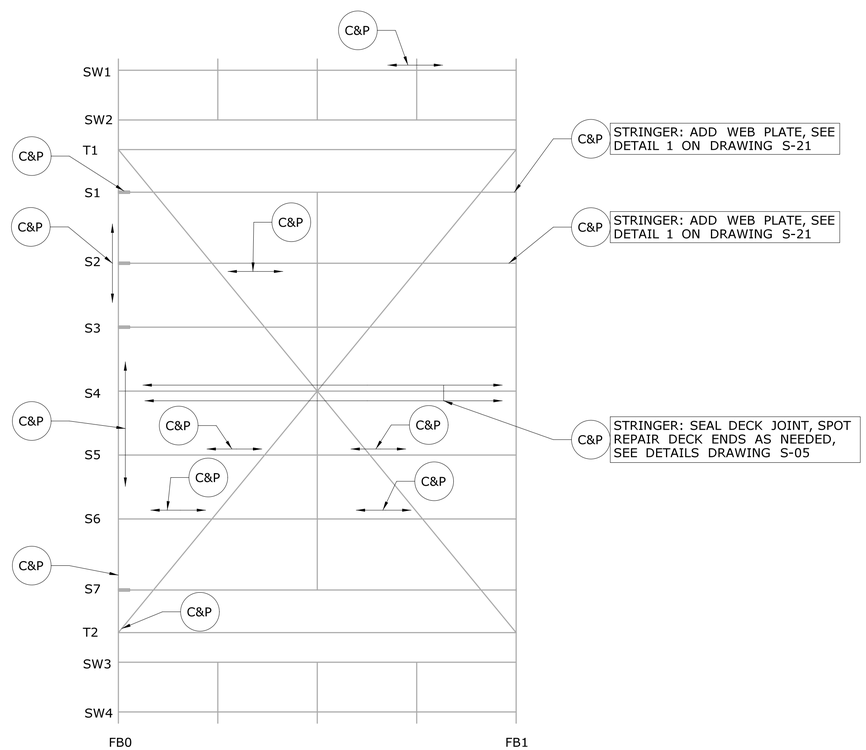

DECK FRAMING PANEL 1 PLAN

SCALE: $^{3}/_{16}$" = 1'-0"

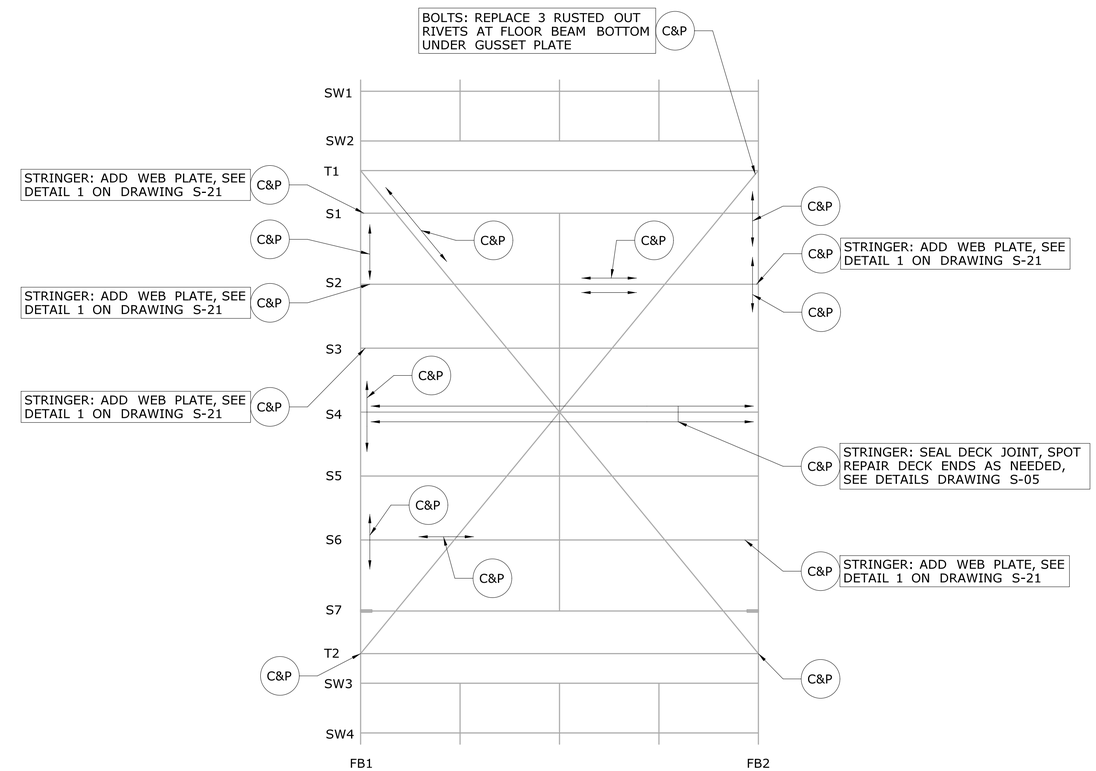

DECK FRAMING PANEL 2 PLAN

SCALE: $^{3}/_{16}$" = 1'-0"

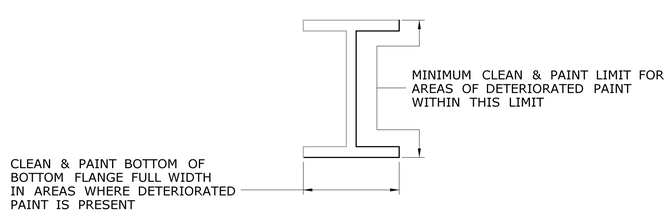

TYPICAL STRINGER AND FLOORBEAM CLEAN & PAINT LIMIT

NOT TO SCALE

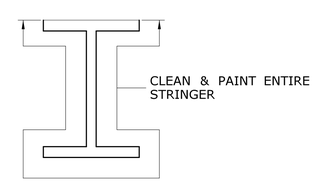

TYPICAL STRINGER 4 CLEAN & PAINT LIMIT

NOT TO SCALE

NOTE:

1. FOR STRUCTURAL STEEL NOTES, SEE DRAWING S-21.
2. FOR PAINTING NOTES, SEE DRAWING S-21.
3. C&P = CLEAN AND PAINT

REV.	DATE	REVISION DESCRIPTION	SHEET NO.
-	-	-	-
-	-	-	-
-	-	-	-
-	-	-	-
-	-	-	-
-	-	-	-

THE INFORMATION, INCLUDING ESTIMATED QUANTITIES OF WORK, SHOWN ON THESE SHEETS IS BASED ON LIMITED INVESTIGATIONS BY THE STATE AND IS IN NO WAY WARRANTED TO INDICATE THE CONDITIONS OF ACTUAL QUANTITIES OF WORK WHICH WILL BE REQUIRED.

Plotted Date: 12/17/2019

DESIGNER/DRAFTER: PAL

CHECKED BY: KAT

SCALE AS NOTED

STATE OF CONNECTICUT
DEPARTMENT OF TRANSPORTATION

Filename: ...\SB_MSH_0051_0272_FRMP1P2.dgn

SIGNATURE/BLOCK:

STATE OF CONNECTICUT — JOSEPH A. CLOUGH — No. 19382 — LICENSED PROFESSIONAL ENGINEER — 10/18/2018

CLOUGH, HARBOUR & ASSOCIATES, LLP
200 CORPORATE PL.
ROCKY HILL, CT 06067

PROJECT TITLE:

REHABILITATION OF BRIDGE NOS. 01487 & 03245 RTE 177 OVER FARMINGTON RIVER

TOWN: **FARMINGTON**

DRAWING TITLE: **DECK FRAMING PANEL 1 AND PANEL 2 PLANS**

PROJECT NO. **51-272**

DRAWING NO. **S-15**

SHEET NO. **05.15**

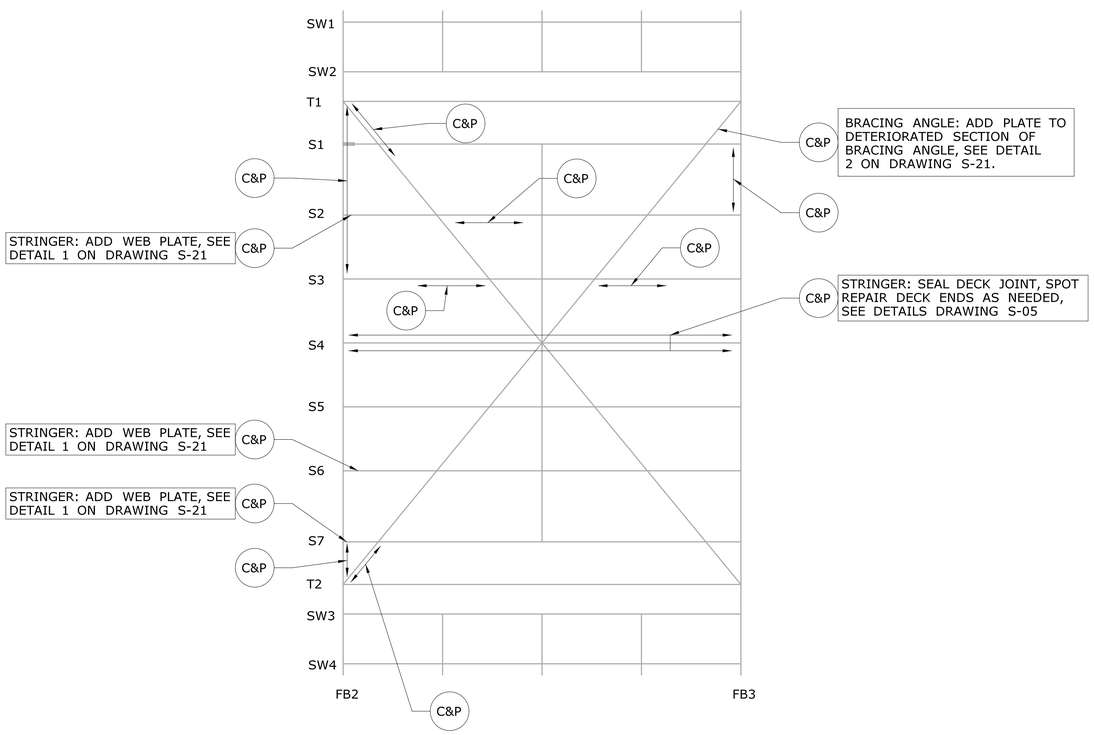

DECK FRAMING PANEL 3 PLAN

SCALE: 3/16" = 1'-0"

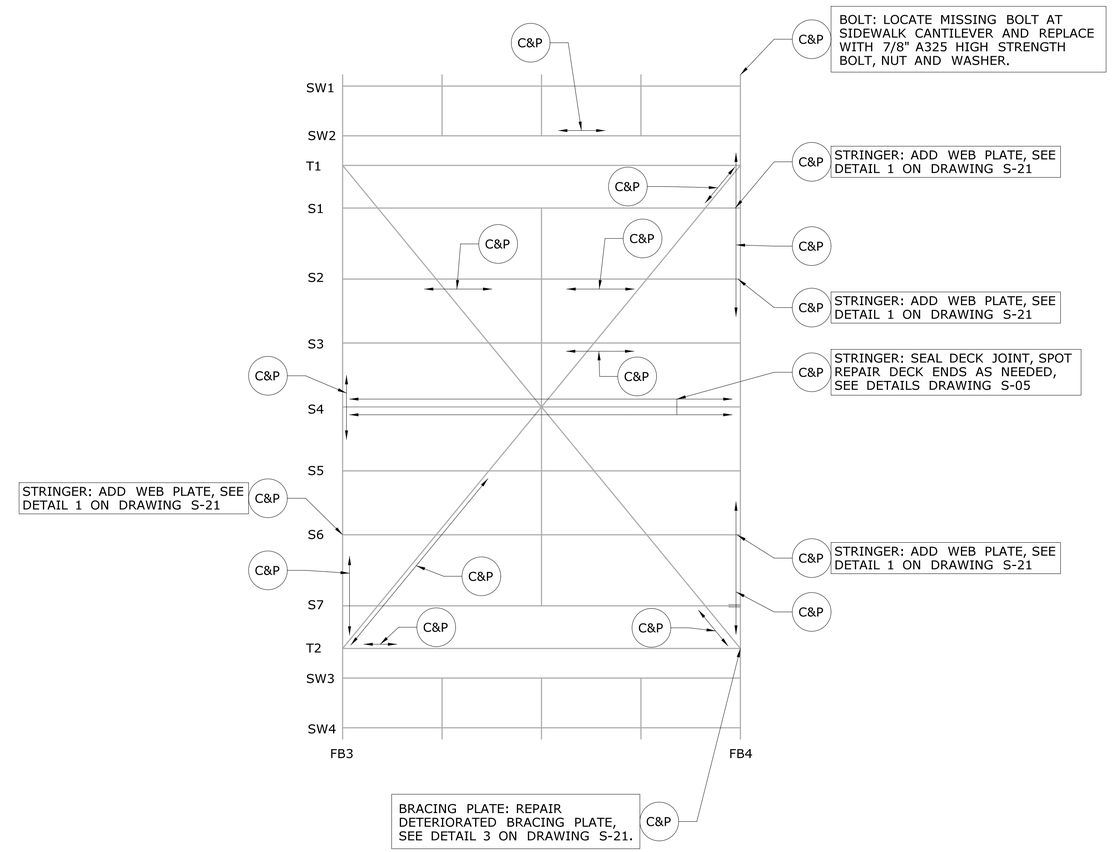

DECK FRAMING PANEL 4 PLAN

SCALE: 3/16" = 1'-0"

NOTE:

1. FOR STRUCTURAL STEEL NOTES, SEE DRAWING S-21.
2. FOR PAINTING NOTES, SEE DRAWING S-21.
3. C&P = CLEAN AND PAINT

REV.	DATE	REVISION DESCRIPTION	SHEET NO.
-	-	-	-
-	-	-	-
-	-	-	-
-	-	-	-
-	-	-	-
-	-	-	-

THE INFORMATION, INCLUDING ESTIMATED QUANTITIES OF WORK, SHOWN ON THESE SHEETS IS BASED ON LIMITED INVESTIGATIONS BY THE STATE AND IS IN NO WAY WARRANTED TO INDICATE THE CONDITIONS OF ACTUAL QUANTITIES OF WORK WHICH WILL BE REQUIRED.

Plotted Date: 12/17/2019

DESIGNER/DRAFTER: **PAL**

CHECKED BY: **KAT**

SCALE AS NOTED

STATE OF CONNECTICUT
DEPARTMENT OF TRANSPORTATION

Filename: ...\SB_MSH_0051_0272_FRMP3P4.dgn

SIGNATURE/BLOCK:

STATE OF CONNECTICUT
STEPHEN J. FAHEY
No. 19382
LICENSED PROFESSIONAL ENGINEER
10/18/2018

CLOUGH, HARBOUR & ASSOCIATES, LLP
200 CORPORATE PL.
ROCKY HILL, CT 06067

PROJECT TITLE:

REHABILITATION OF BRIDGE NOS. 01487 & 03245 RTE 177 OVER FARMINGTON RIVER

TOWN: **FARMINGTON**

DRAWING TITLE: **DECK FRAMING PANEL 3 AND PANEL 4 PLANS**

PROJECT NO. **51-272**

DRAWING NO. **S-16**

SHEET NO. **05.16**

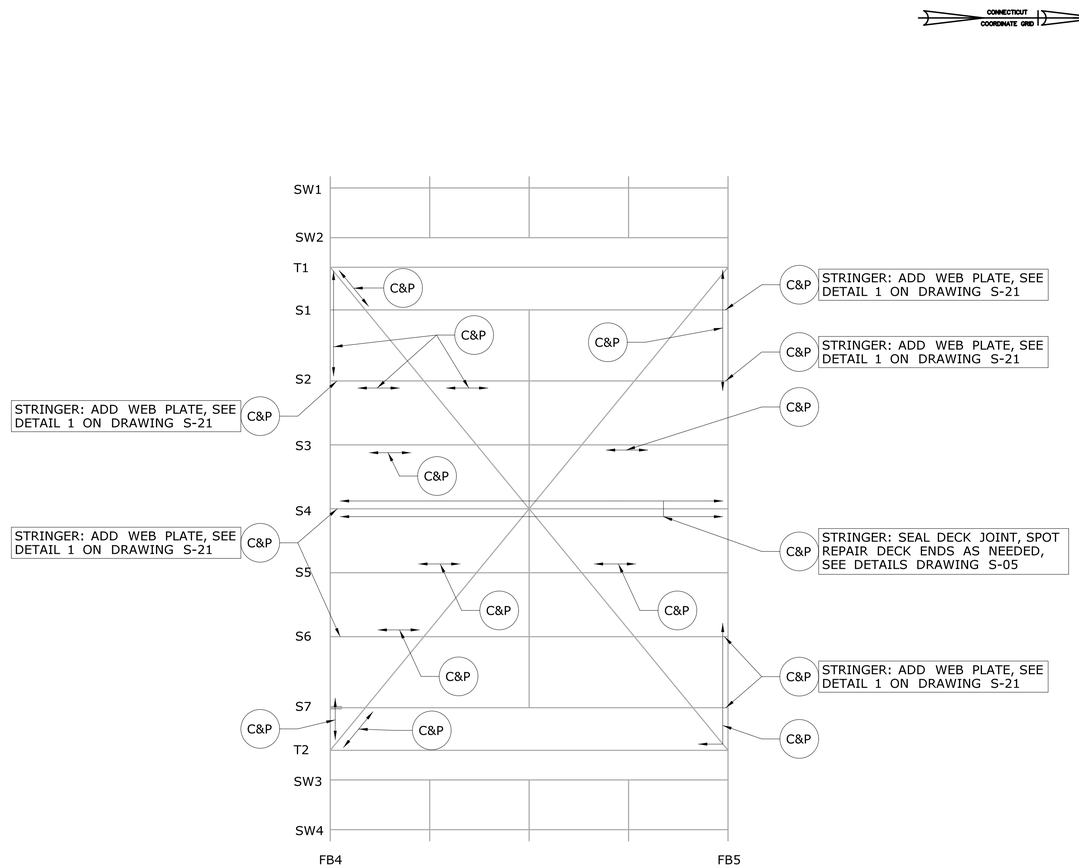

DECK FRAMING PANEL 5 PLAN

SCALE: 3/16" = 1'-0"

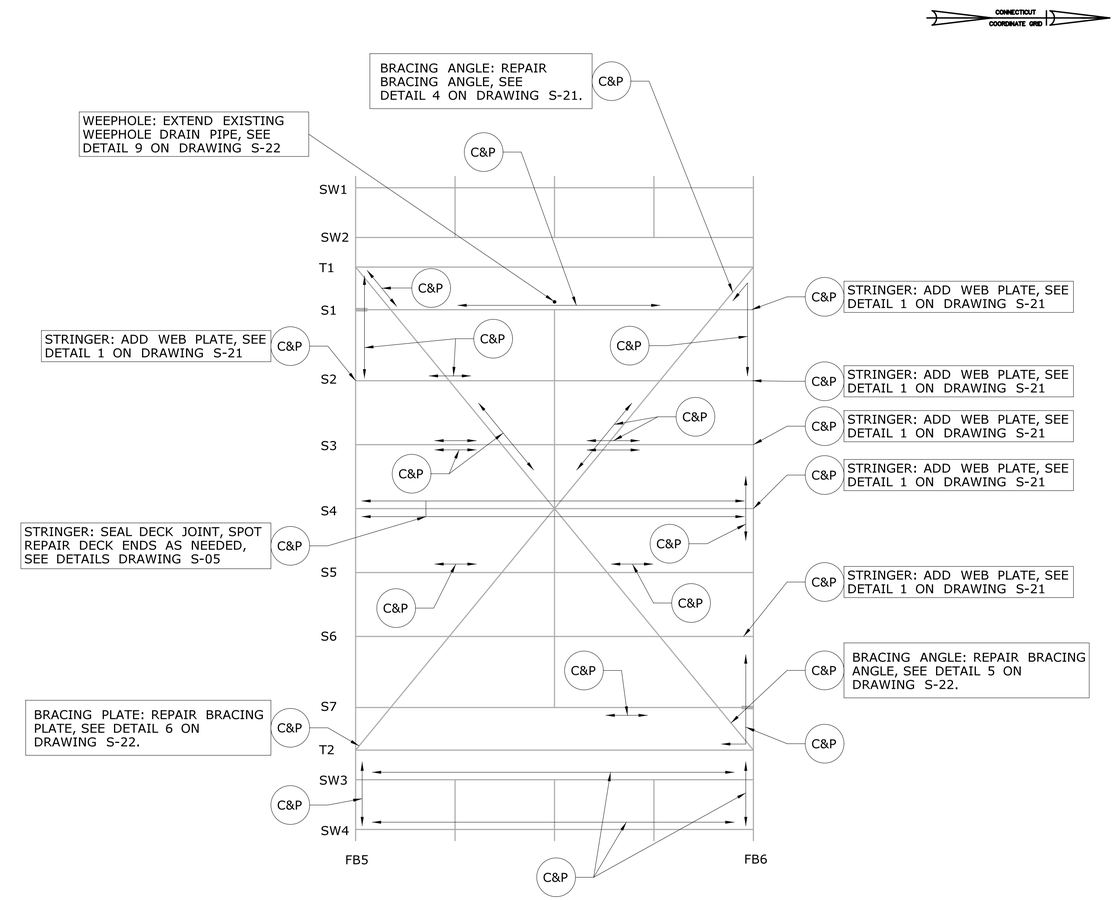

DECK FRAMING PANEL 6 PLAN

SCALE: 3/16" = 1'-0"

NOTE:

1. FOR STRUCTURAL STEEL NOTES, SEE DRAWING S-21.
2. FOR PAINTING NOTES, SEE DRAWING S-21.
3. C&P = CLEAN AND PAINT

REV.	DATE	REVISION DESCRIPTION	SHEET NO.
-	-	-	-
-	-	-	-
-	-	-	-
-	-	-	-
-	-	-	-
-	-	-	-

THE INFORMATION, INCLUDING ESTIMATED QUANTITIES OF WORK, SHOWN ON THESE SHEETS IS BASED ON LIMITED INVESTIGATIONS BY THE STATE AND IS IN NO WAY WARRANTED TO INDICATE THE CONDITIONS OF ACTUAL QUANTITIES OF WORK WHICH WILL BE REQUIRED.

Plotted Date: 12/17/2019

DESIGNER/DRAFTER: **PAL**

CHECKED BY: **KAT**

SCALE AS NOTED

STATE OF CONNECTICUT
DEPARTMENT OF TRANSPORTATION

Filename: ...\SB_MSH_0051_0272_FRMP5P6.dgn

SIGNATURE/ BLOCK:

STATE OF CONNECTICUT
STEPHEN C. CHAMPLIN
No. 19382
LICENSED PROFESSIONAL ENGINEER
10/18/2019

CLOUGH, HARBOUR & ASSOCIATES, LLP
200 CORPORATE PL.
ROCKY HILL, CT 06067

PROJECT TITLE:
REHABILITATION OF BRIDGE NOS. 01487 & 03245 RTE 177 OVER FARMINGTON RIVER

TOWN: **FARMINGTON**

DRAWING TITLE: **DECK FRAMING PANEL 5 AND PANEL 6 PLANS**

PROJECT NO. **51-272**

DRAWING NO. **S-17**

SHEET NO. **05.17**

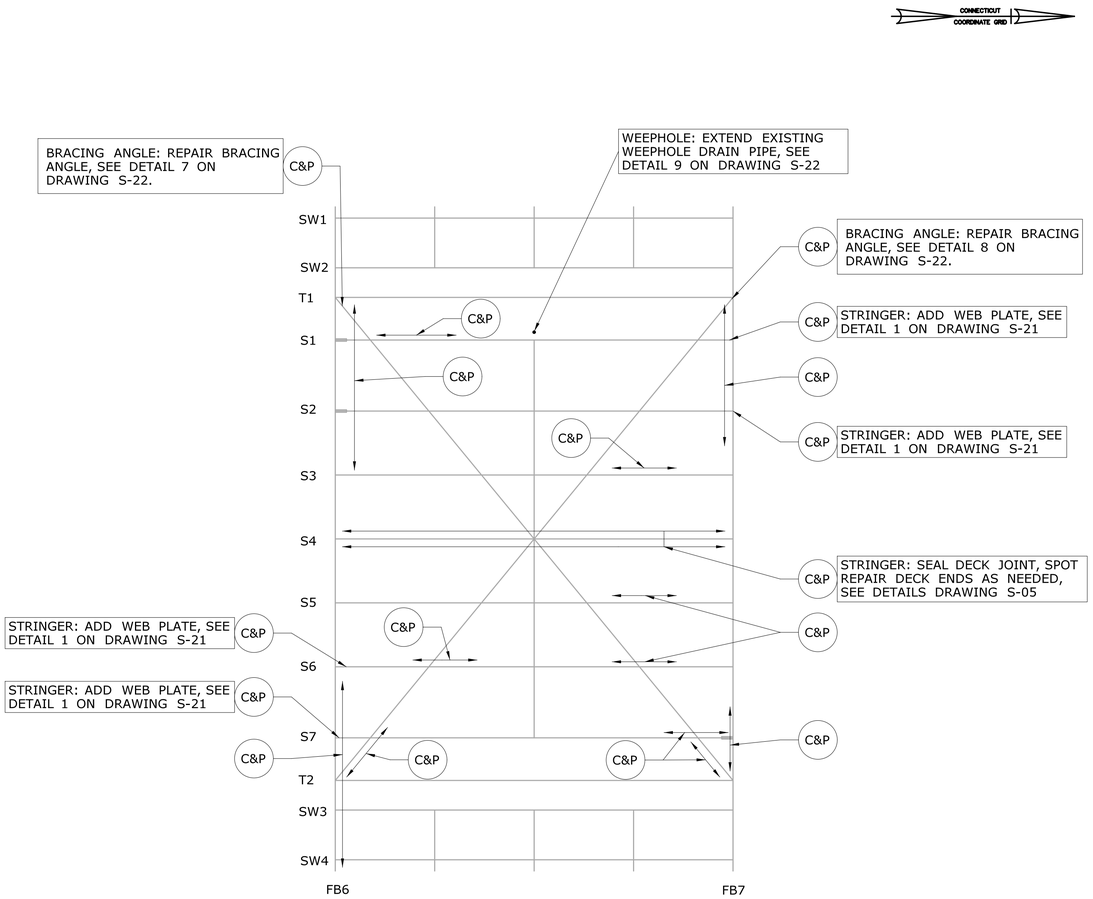

DECK FRAMING PANEL 7 PLAN

SCALE: $^{3}/_{16}$" = 1'-0"

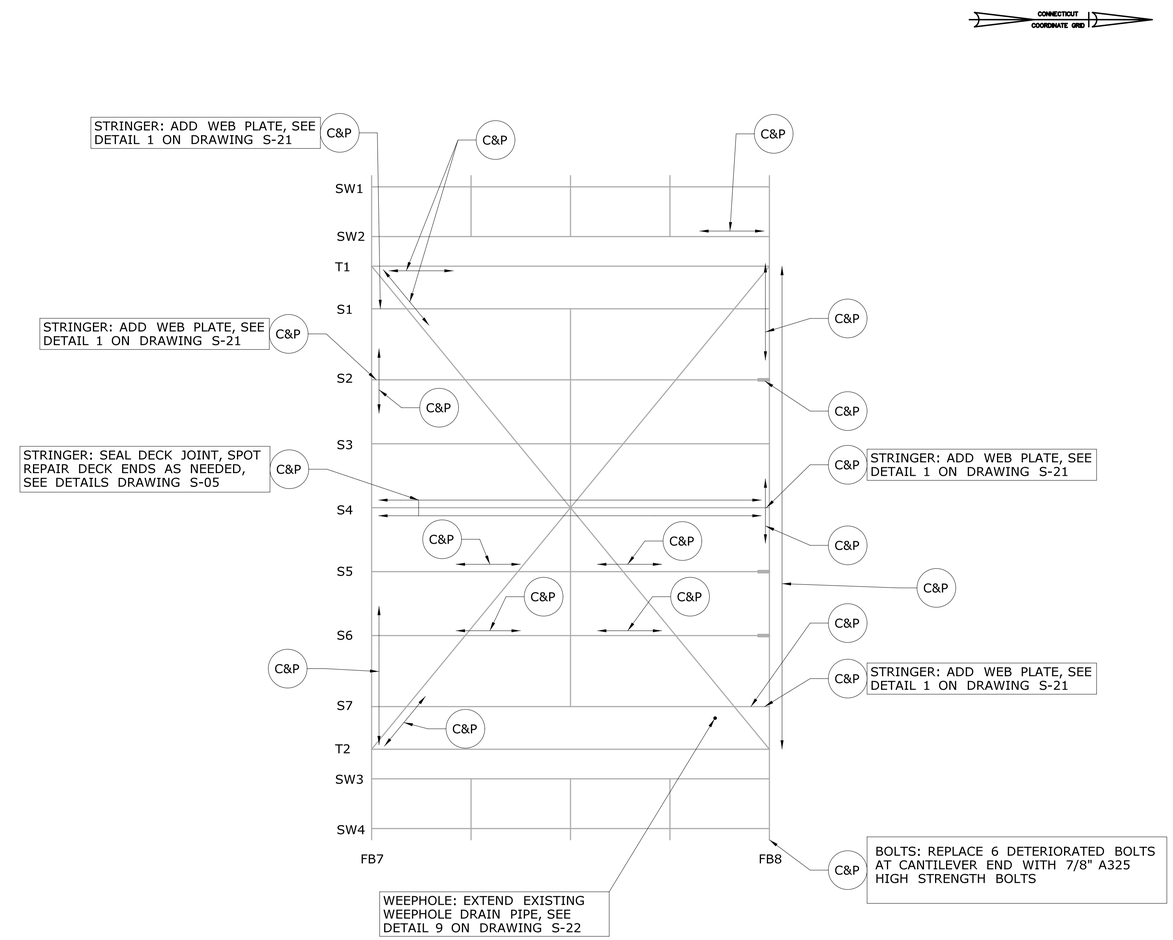

DECK FRAMING PANEL 8 PLAN

SCALE: $^{3}/_{16}$" = 1'-0"

NOTE:

1. FOR STRUCTURAL STEEL NOTES, SEE DRAWING S-21.
2. FOR PAINTING NOTES, SEE DRAWING S-21.
3. C&P = CLEAN AND PAINT.

REV.	DATE	REVISION DESCRIPTION	SHEET NO.
-	-	-	-
-	-	-	-
-	-	-	-
-	-	-	-
-	-	-	-
-	-	-	-

THE INFORMATION, INCLUDING ESTIMATED QUANTITIES OF WORK, SHOWN ON THESE SHEETS IS BASED ON LIMITED INVESTIGATIONS BY THE STATE AND IS IN NO WAY WARRANTED TO INDICATE THE CONDITIONS OF ACTUAL QUANTITIES OF WORK WHICH WILL BE REQUIRED.

Plotted Date: 12/17/2019

DESIGNER/DRAFTER: **PAL**

CHECKED BY: **KAT**

SCALE AS NOTED

STATE OF CONNECTICUT
DEPARTMENT OF TRANSPORTATION

Filename: ...\SB_MSH_0051_0272_FRMP7P8.dgn

SIGNATURE/ BLOCK:

STATE OF CONNECTICUT · PAUL A. LEVESQUE · No. 19382 · LICENSED PROFESSIONAL ENGINEER · 10/8/2019

CLOUGH, HARBOUR & ASSOCIATES, LLP
200 CORPORATE PL.
ROCKY HILL, CT 06067

PROJECT TITLE:
REHABILITATION OF BRIDGE NOS. 01487 & 03245 RTE 177 OVER FARMINGTON RIVER

TOWN: **FARMINGTON**

DRAWING TITLE: **DECK FRAMING PANEL 7 AND PANEL 8 PLANS**

PROJECT NO. **51-272**

DRAWING NO. **S-18**

SHEET NO. **05.18**

NOTE:

1. FOR STRUCTURAL STEEL NOTES, SEE DRAWING S-21.
2. FOR PAINTING NOTES, SEE DRAWING S-21.
3. C&P = CLEAN AND PAINT.
4. C&P LABELS WITHOUT A LOCATION INDICATOR ARE ON THE EAST SIDE.

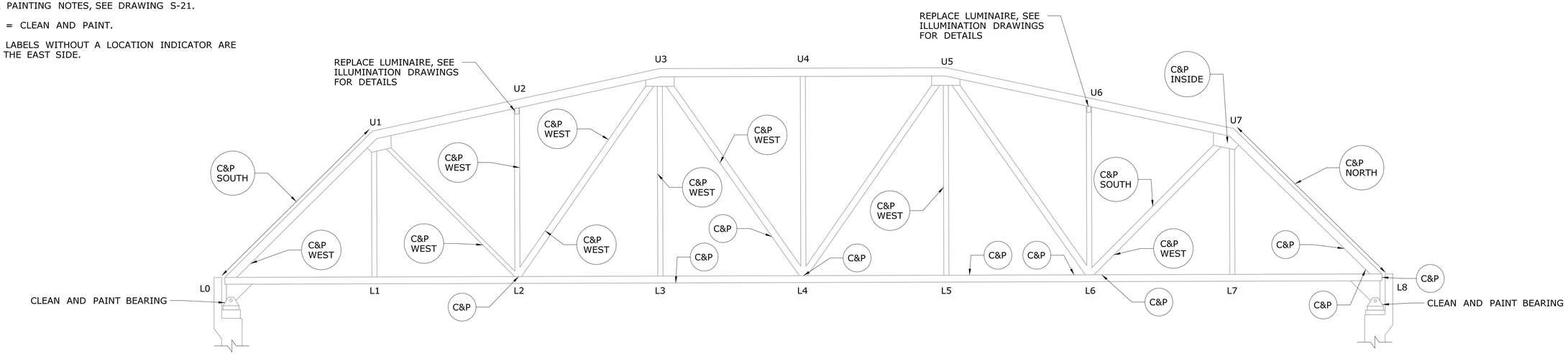

EAST ELEVATION OF WEST TRUSS (T1)

SCALE: $^{3}/_{32}$" = 1'-0"

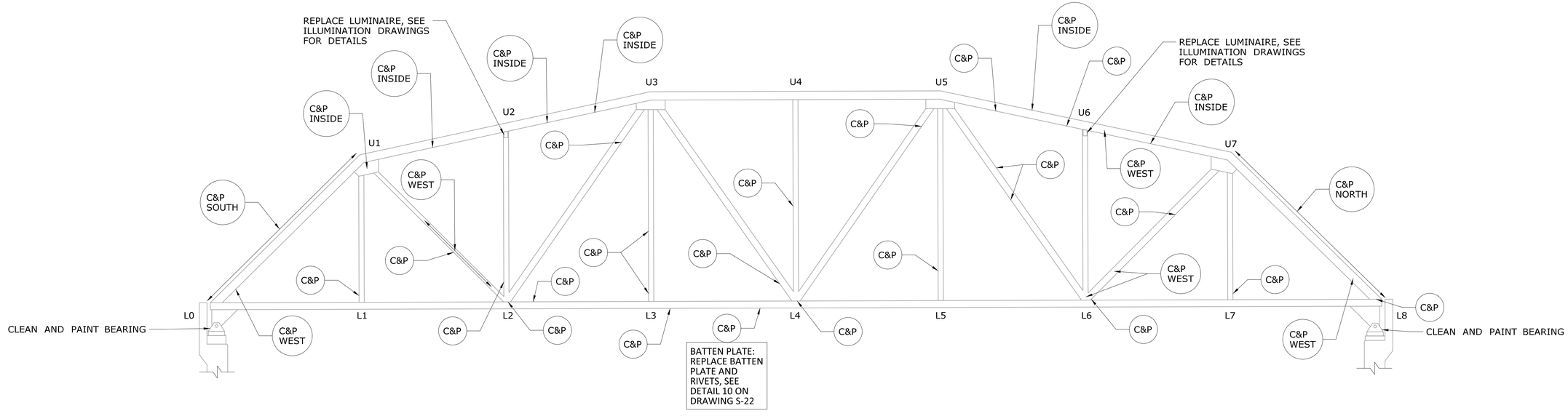

EAST ELEVATION OF EAST TRUSS (T2)

SCALE: $^{3}/_{32}$" = 1'-0"

REV.	DATE	REVISION DESCRIPTION	SHEET NO.
-	-	-	-
-	-	-	-
-	-	-	-
-	-	-	-
-	-	-	-
-	-	-	-

THE INFORMATION, INCLUDING ESTIMATED QUANTITIES OF WORK, SHOWN ON THESE SHEETS IS BASED ON LIMITED INVESTIGATIONS BY THE STATE AND IS IN NO WAY WARRANTED TO INDICATE THE CONDITIONS OF ACTUAL QUANTITIES OF WORK WHICH WILL BE REQUIRED.

Plotted Date: 12/17/2019

DESIGNER/DRAFTER: **PAL**

CHECKED BY: **KAT**

SCALE AS NOTED

STATE OF CONNECTICUT
DEPARTMENT OF TRANSPORTATION

Filename: ...\SB_MSH_0051_0272_ELEV.dgn

SIGNATURE/ BLOCK:

STATE OF CONNECTICUT · STEPHEN J. SCHEIDT · No. 18382 · LICENSED PROFESSIONAL ENGINEER · 12/18/2019

CLOUGH, HARBOUR & ASSOCIATES, LLP
200 CORPORATE PL.
ROCKY HILL, CT 06067

PROJECT TITLE:

REHABILITATION OF BRIDGE NOS. 01487 & 03245 RTE 177 OVER FARMINGTON RIVER

TOWN: **FARMINGTON**

DRAWING TITLE: **TRUSS ELEVATIONS**

PROJECT NO. **51-272**

DRAWING NO. **S-19**

SHEET NO. **05.19**

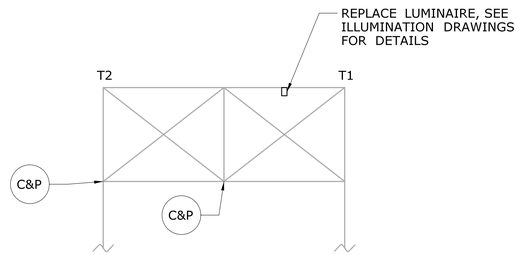

SWAY FRAME 1 NORTH ELEVATION
SCALE: 3/32" = 1'-0"

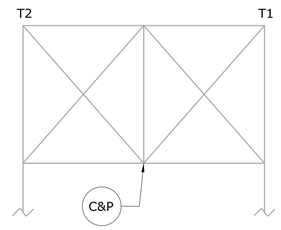

SWAY FRAME 2 NORTH ELEVATION
SCALE: 3/32" = 1'-0"

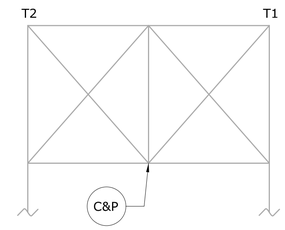

SWAY FRAME 3 NORTH ELEVATION
SCALE: 3/32" = 1'-0"

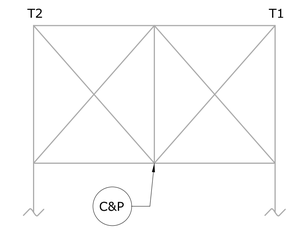

SWAY FRAME 4 NORTH ELEVATION
SCALE: 3/32" = 1'-0"

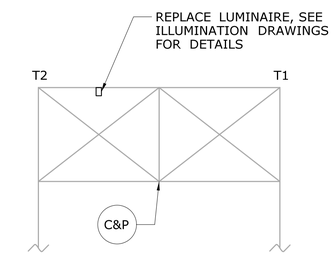

SWAY FRAME 5 NORTH ELEVATION
SCALE: 3/32" = 1'-0"

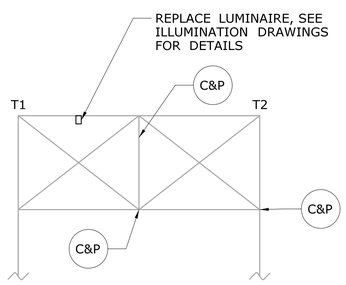

SWAY FRAME 1 SOUTH ELEVATION
SCALE: 3/32" = 1'-0"

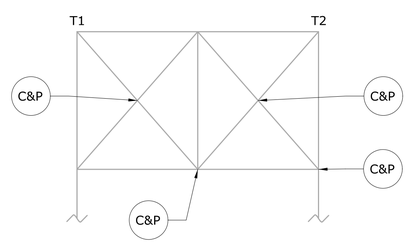

SWAY FRAME 2 SOUTH ELEVATION
SCALE: 3/32" = 1'-0"

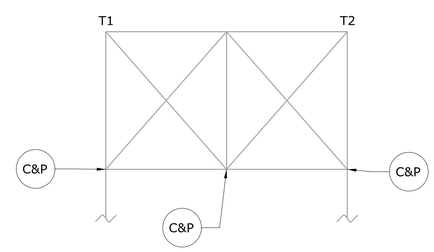

SWAY FRAME 3 SOUTH ELEVATION
SCALE: 3/32" = 1'-0"

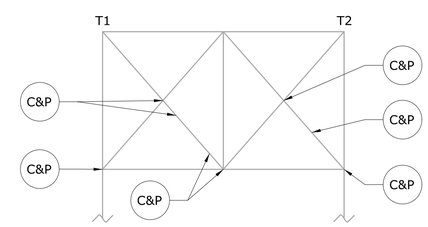

SWAY FRAME 4 SOUTH ELEVATION
SCALE: 3/32" = 1'-0"

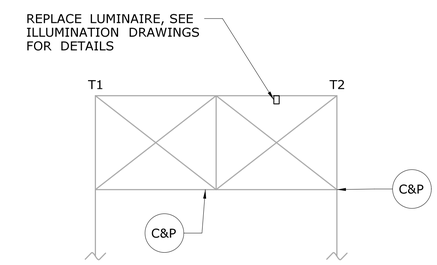

SWAY FRAME 5 SOUTH ELEVATION
SCALE: 3/32" = 1'-0"

NOTE:

1. FOR STRUCTURAL STEEL NOTES, SEE DRAWING S-21.
2. FOR PAINTING NOTES, SEE DRAWING S-21.
3. C&P = CLEAN AND PAINT

REV.	DATE	REVISION DESCRIPTION	SHEET NO.
-	-	-	-
-	-	-	-
-	-	-	-
-	-	-	-
-	-	-	-
-	-	-	-

THE INFORMATION, INCLUDING ESTIMATED QUANTITIES OF WORK, SHOWN ON THESE SHEETS IS BASED ON LIMITED INVESTIGATIONS BY THE STATE AND IS IN NO WAY WARRANTED TO INDICATE THE CONDITIONS OF ACTUAL QUANTITIES OF WORK WHICH WILL BE REQUIRED.

Plotted Date: 12/17/2019

DESIGNER/DRAFTER: **PAL**
CHECKED BY: **KAT**
SCALE AS NOTED

STATE OF CONNECTICUT
DEPARTMENT OF TRANSPORTATION

Filename: ...\SB_MSH_0051_0272_SWAY.dgn

SIGNATURE/BLOCK:

STATE OF CONNECTICUT · STEPHEN J. KAPUSTA · No. 18382 · LICENSED PROFESSIONAL ENGINEER · 12/18/2019

CLOUGH, HARBOUR & ASSOCIATES, LLP
200 CORPORATE PL.
ROCKY HILL, CT 06067

PROJECT TITLE:
REHABILITATION OF BRIDGE NOS. 01487 & 03245 RTE 177 OVER FARMINGTON RIVER

TOWN: **FARMINGTON**

DRAWING TITLE: **SWAY BRACING ELEVATIONS**

PROJECT NO. **51-272**
DRAWING NO. **S-20**
SHEET NO. **05.20**

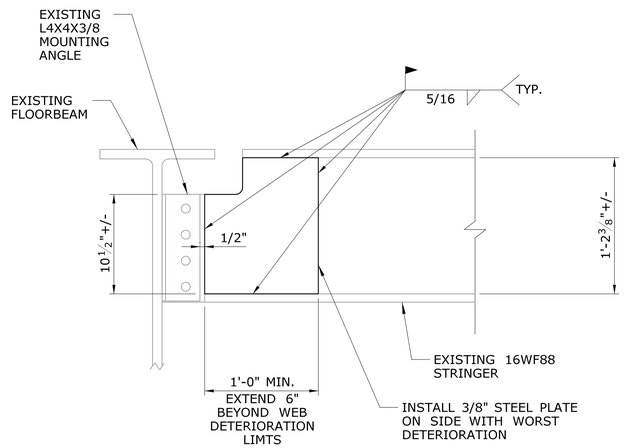

DETAIL 1: TYPICAL STRINGER END WEB REPAIR

SCALE: 1 1/2" = 1'-0"

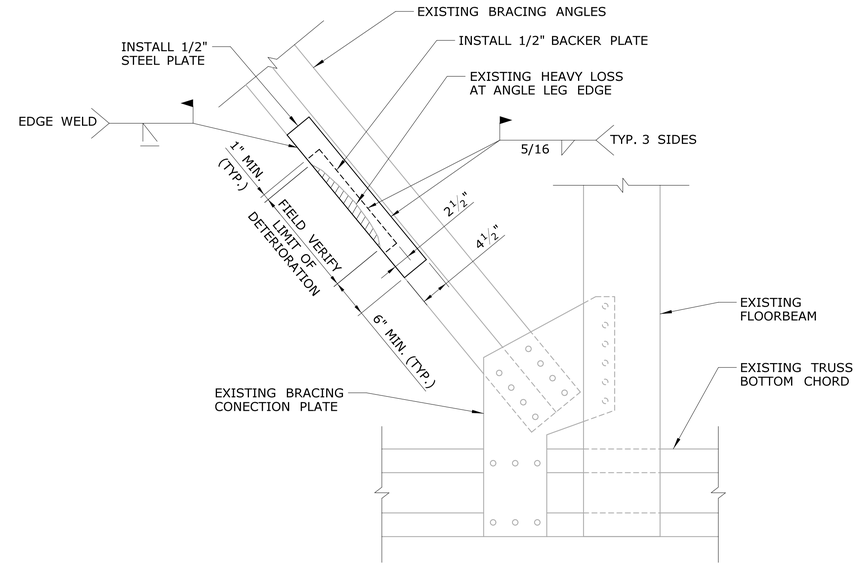

DETAIL 2: BRACING ANGLE REPAIR PLAN (BOTTOM VIEW)

SCALE: 1" = 1'-0"

STRUCTURAL STEEL NOTES:

1. STRUCTURAL STEEL (LOW ALLOY) SHALL CONFORM TO AASHTO M270, GRADE 50 T2.
2. THE STRUCTURAL STEEL FABRICATORS SHALL BE CERTIFIED UNDER THE AISC QUALITY CONTROL PROGRAM AS NOTED BELOW: CATEGORY MBr - MAJOR STEEL BRIDGES.
3. THE CONTRACTOR SHALL TAKE THE PROPER PRECAUTIONS TO ENSURE THE STABILITY OF ALL STRUCTURAL ELEMENTS DURING STRUCTURAL STEEL MODIFICATIONS UNTIL THE TOTAL STRUCTURE IS RESTORED.
4. PAINT SHALL BE REMOVED FROM EXISTING STEEL IN ALL AREAS WHERE WELDING IS REQUIRED.
5. ALL EXISTING DIMENSIONS SHALL BE FIELD VERIFIED PRIOR TO FABRICATION.
6. ALL STEEL REPAIR PLATES AND HARDWARE SHALL BE PAINTED TO MATCH COLOR OF EXISTING PAINT, PAID FOR UNDER LOCALIZED PAINT REMOVAL AND FIELD PAINTING OF EXISTING STEEL.
7. ALL STEEL REPAIRS, INCLUDING HARDWARE FOR RIVET REPLACEMENTS, IS PAID FOR UNDER "STRUCTURAL STEEL REPAIRS (SITE NO. 1)".
8. LIVE LOAD MUST BE MINIMIZED OVER THE REPAIR AREAS.

PAINTING NOTES:

1. THE BRIDGE STRUCTURE PAINTING LIMITS SHOWN IN THE PLANS ARE APPROXIMATE. AREAS THAT REQUIRE PAINT WERE DETERMINED FROM LIMITED GROUND OBSERVATIONS AND THE MOST CURRENT INSPECTION REPORT. ALL AREAS OF RUST REQUIRING PAINT MAY NOT BE SHOWN IN THE PLANS. THE CONTRACTOR SHALL INSPECT ALL AREAS OF THE STEEL BRIDGE STRUCTURE FOR RUST AND MISSING PAINT AND CLEAN AND PAINT ALL DETERIORATED AREAS AS APPROVED BY THE ENGINEER.
2. DIMENSIONS OF PAINTING LIMITS SHOWN ARE UNKNOWN SO THE "LOCALIZED PAINT REMOVAL AND FIELD PAINTING OF EXISTING STEEL" QUANTITY IS AN ESTIMATE.
3. ALL STEEL CLEANING AND PAINTING SHOWN IN THE PLANS, INCLUDING BEARINGS AND STEEL REPAIRS, IS PAID FOR UNDER "LOCALIZED PAINT REMOVAL AND FIELD PAINTING OF EXISTING STEEL".
4. PAINT DAMAGE CAUSED DURING RIVET REMOVAL, STEEL REPAIRS, OR ANY OTHER CONSTRUCTION OPERATIONS MUST BE CLEANED AND PAINTED.

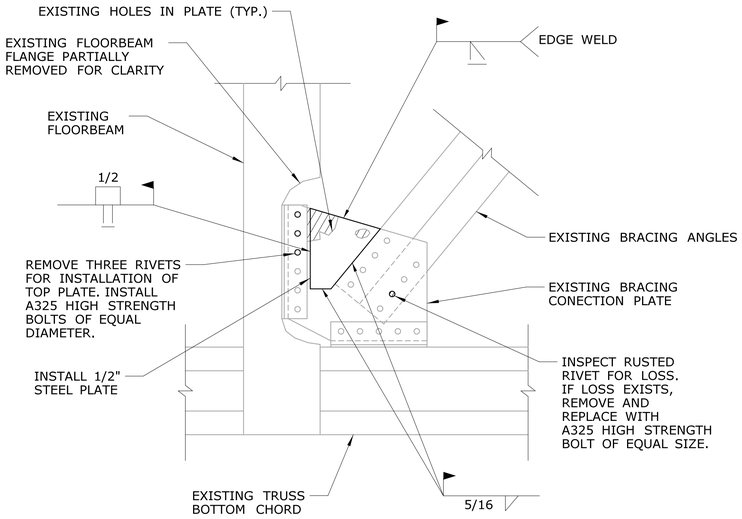

BOTTOM PLAN VIEW

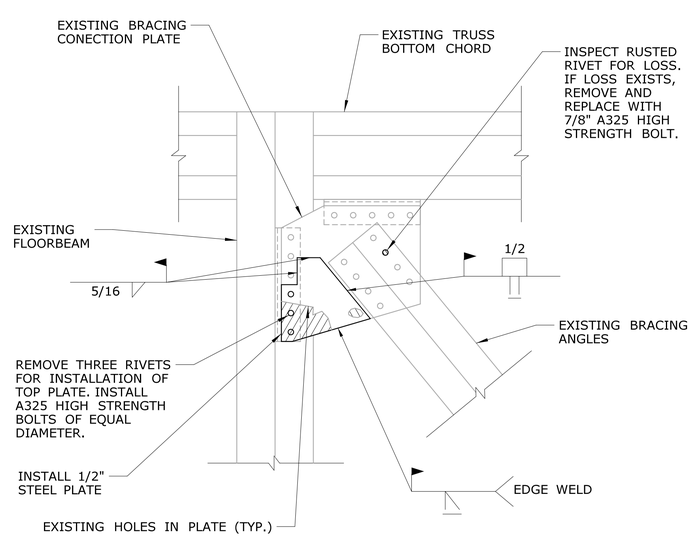

TOP PLAN VIEW

DETAIL 3: BRACING PLATE REPAIR PLAN

SCALE: 1" = 1'-0"

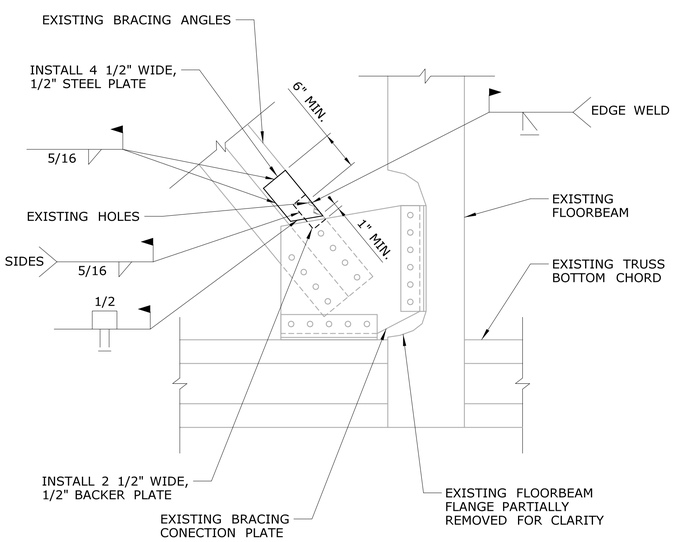

DETAIL 4: BRACING ANGLE REPAIR PLAN (BOTTOM VIEW)

SCALE: 1" = 1'-0"

REV.	DATE	REVISION DESCRIPTION	SHEET NO.
-	-	-	-
-	-	-	-
-	-	-	-
-	-	-	-
-	-	-	-
-	-	-	-

THE INFORMATION, INCLUDING ESTIMATED QUANTITIES OF WORK, SHOWN ON THESE SHEETS IS BASED ON LIMITED INVESTIGATIONS BY THE STATE AND IS IN NO WAY WARRANTED TO INDICATE THE CONDITIONS OF ACTUAL QUANTITIES OF WORK WHICH WILL BE REQUIRED.

Plotted Date: 12/17/2019

DESIGNER/DRAFTER: **PAL**

CHECKED BY: **KAT**

SCALE AS NOTED

STATE OF CONNECTICUT
DEPARTMENT OF TRANSPORTATION

Filename: ...\SB_MSH_0051_0272_STEEL_REPAIR01.dgn

SIGNATURE/ BLOCK:

STATE OF CONNECTICUT LICENSED PROFESSIONAL ENGINEER No. 19382 10/18/2019

CLOUGH, HARBOUR & ASSOCIATES, LLP
200 CORPORATE PL.
ROCKY HILL, CT 06067

PROJECT TITLE:
REHABILITATION OF BRIDGE NOS. 01487 & 03245 RTE 177 OVER FARMINGTON RIVER

TOWN: **FARMINGTON**

DRAWING TITLE: **STEEL REPAIR DETAILS (1 OF 2)**

PROJECT NO. **51-272**

DRAWING NO. **S-21**

SHEET NO. **05.21**

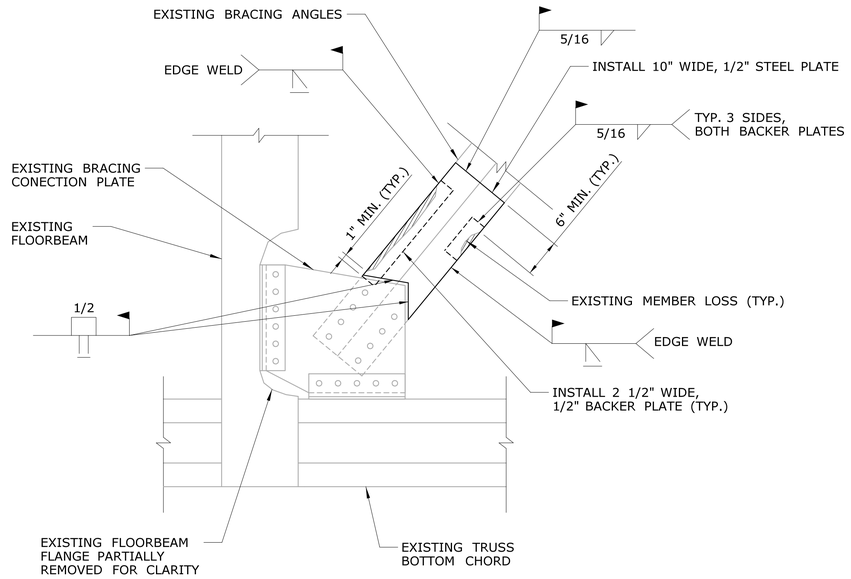

DETAIL 5: BRACING ANGLE REPAIR PLAN (BOTTOM VIEW)

SCALE: 1" = 1'-0"

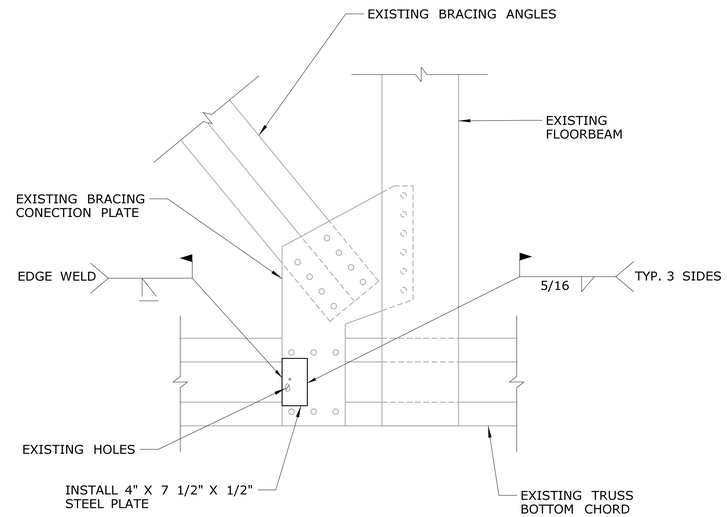

DETAIL 6: BRACING PLATE REPAIR PLAN (BOTTOM VIEW)

SCALE: 1" = 1'-0"

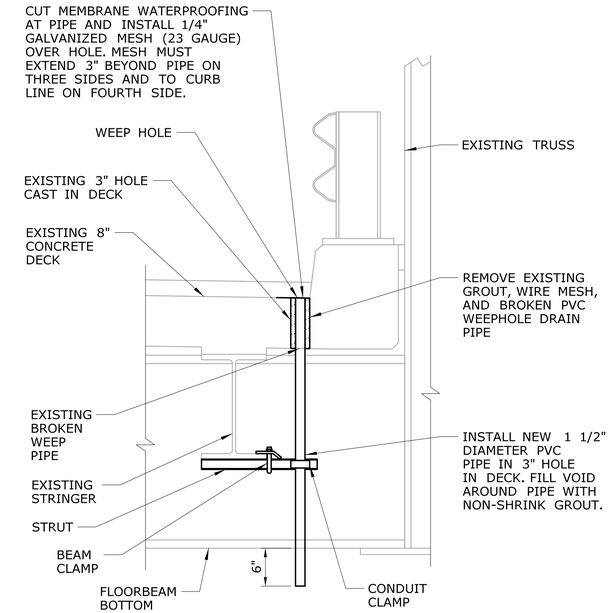

NOTES:

1. BROKEN WEEPHOLE DRAIN PIPE ONLY NEEDS TO BE REPLACED AT THE THREE LOCATIONS SHOWN ON THE BOTTOM CHORD PANEL 6, 7, AND 8 PLANS. THE MEMBRANE WATERPROOFING MUST BE CUT AND MESH MUST BE INSTALLED AT ALL WEEPHOLE DRAIN LOCATIONS PER THIS DETAIL.
2. PAYMENT FOR THE WEEP HOLE DRAIN PIPE REPLACEMENT AND BRACING AT THE BROKEN DRAIN PIPE IN PANELS 6, 7, AND 8 IS PAID FOR UNDER "REPAIR WEEP DRAINS". CUTTING MEMBRANE WATERPROOFING AND INSTALLING WIRE MESH AT ALL OTHER WEEP HOLE LOCATIONS IS INCIDENTAL TO "MEMBRANE WATERPROOFING (WOVEN GLASS FABRIC)".

DETAIL 9: WEEPHOLE DETAIL

SCALE: 1" = 1'-0"

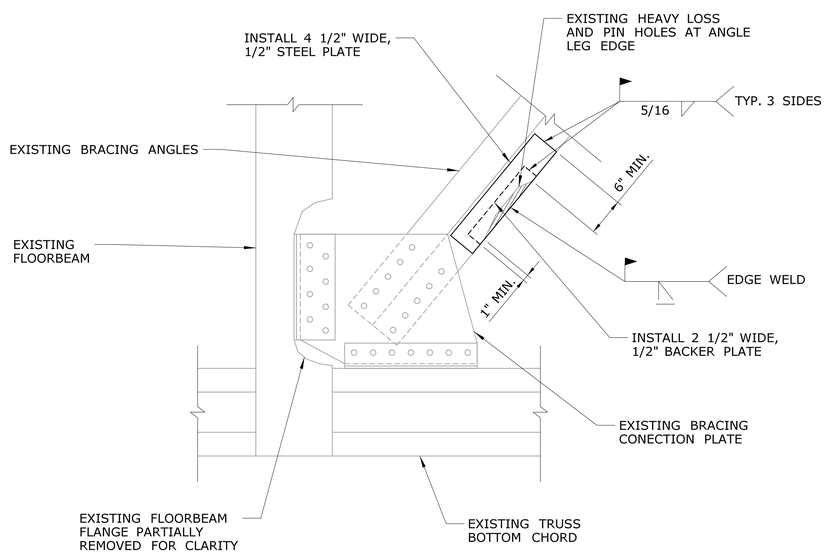

DETAIL 7: BRACING ANGLE REPAIR PLAN (BOTTOM VIEW)

SCALE: 1" = 1'-0"

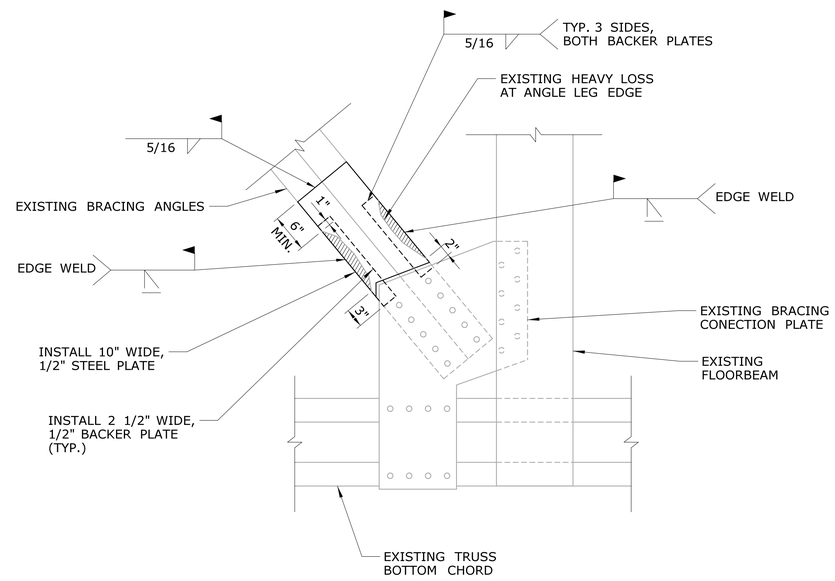

DETAIL 8: BRACING ANGLE REPAIR PLAN (BOTTOM VIEW)

SCALE: 1" = 1'-0"

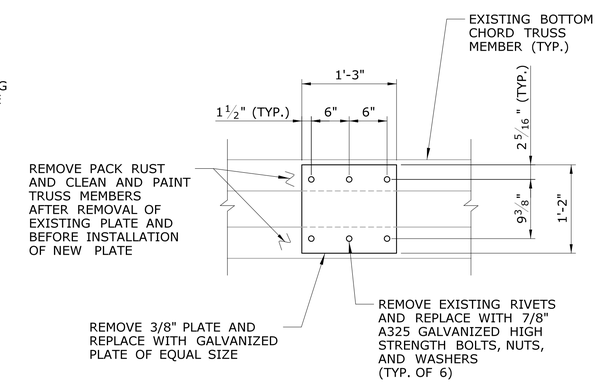

DETAIL 10: BATTEN PLATE REPAIR AT T2 L3-L4 (BOTTOM VIEW)

SCALE: 1" = 1'-0"

REV.	DATE	REVISION DESCRIPTION	SHEET NO.
-	-	-	-
-	-	-	-
-	-	-	-
-	-	-	-
-	-	-	-
-	-	-	-

THE INFORMATION, INCLUDING ESTIMATED QUANTITIES OF WORK, SHOWN ON THESE SHEETS IS BASED ON LIMITED INVESTIGATIONS BY THE STATE AND IS IN NO WAY WARRANTED TO INDICATE THE CONDITIONS OF ACTUAL QUANTITIES OF WORK WHICH WILL BE REQUIRED.

Plotted Date: 12/17/2019

DESIGNER/DRAFTER: PAL

CHECKED BY: KAT

SCALE AS NOTED

STATE OF CONNECTICUT
DEPARTMENT OF TRANSPORTATION

Filename: ...\SB_MSH_0051_0272_STEEL_REPAIR02.dgn

SIGNATURE/BLOCK:

STATE OF CONNECTICUT
PAUL A. LIBERTINO
No. 19382
LICENSED
PROFESSIONAL ENGINEER
19382

CLOUGH, HARBOUR & ASSOCIATES, LLP
200 CORPORATE PL.
ROCKY HILL, CT 06067

PROJECT TITLE:
REHABILITATION OF BRIDGE NOS. 01487 & 03245 RTE 177 OVER FARMINGTON RIVER

TOWN: FARMINGTON

DRAWING TITLE: STEEL REPAIR DETAILS (2 OF 2)

PROJECT NO. 51-272

DRAWING NO. S-22

SHEET NO. 05.22