07 - ELECTRICAL - ILLUMINATION
INDEX OF DRAWINGS

DRAWING NUMBER	DRAWING TITLE	DRAWING NUMBER	DRAWING TITLE
ILL-01	ELECTRICAL - ILLUMINATION INDEX OF DRAWINGS		
ILL-02	ILLUMINATION PLAN AND DETAILS		

THE DESIGN APPEARS TO CONFORM TO APPLICABLE CRITERIA. APPROVAL IS NOT TO BE CONSTRUED TO MEAN THAT ALL ASPECTS OF THE DESIGN HAVE BEEN PERSONALLY CHECKED BY THE UNDERSIGNED.

Christopher J. Bonsignore, P.E.

Digitally signed by Christopher J. Bonsignore, P.E.
DN: E=Christopher.Bonsignore@ct.gov, CN="Christopher J. Bonsignore, P.E.", OU=Department of Transportation, OU=Principal Engineer - Facilities Design, OU=Division of Facilities & Transit, O=State of Connecticut, L=Newington, S=Connecticut, C=US
Date: 2019.11.05 10:17:04-05'00'

REV.	DATE	REVISION DESCRIPTION	SHEET NO.

THE INFORMATION, INCLUDING ESTIMATED QUANTITIES OF WORK, SHOWN ON THESE SHEETS IS BASED ON LIMITED INVESTIGATIONS BY THE STATE AND IS IN NO WAY WARRANTED TO INDICATE THE CONDITIONS OF ACTUAL QUANTITIES OF WORK WHICH WILL BE REQUIRED.

Plotted Date: 8/14/2019

DESIGNER/DRAFTER: MSB
CHECKED BY: JA
NO SCALE

STATE OF CONNECTICUT
DEPARTMENT OF TRANSPORTATION

Filename: ..._engineering_data\ILL-01.dgn

SIGNATURE/BLOCK:
OFFICE OF ENGINEERING
APPROVED BY:

PROJECT TITLE:
BRIDGE NO. 00901
U.S.ROUTE 202/ROUTE 67
OVER HOUSATONIC RIVER

TOWN: NEW MILFORD

DRAWING TITLE:
ELECTRICAL-ILLUMINATION
INDEX OF DRAWINGS

PROJECT NO. 95-254
DRAWING NO. ILL-01
SHEET NO. 07.01

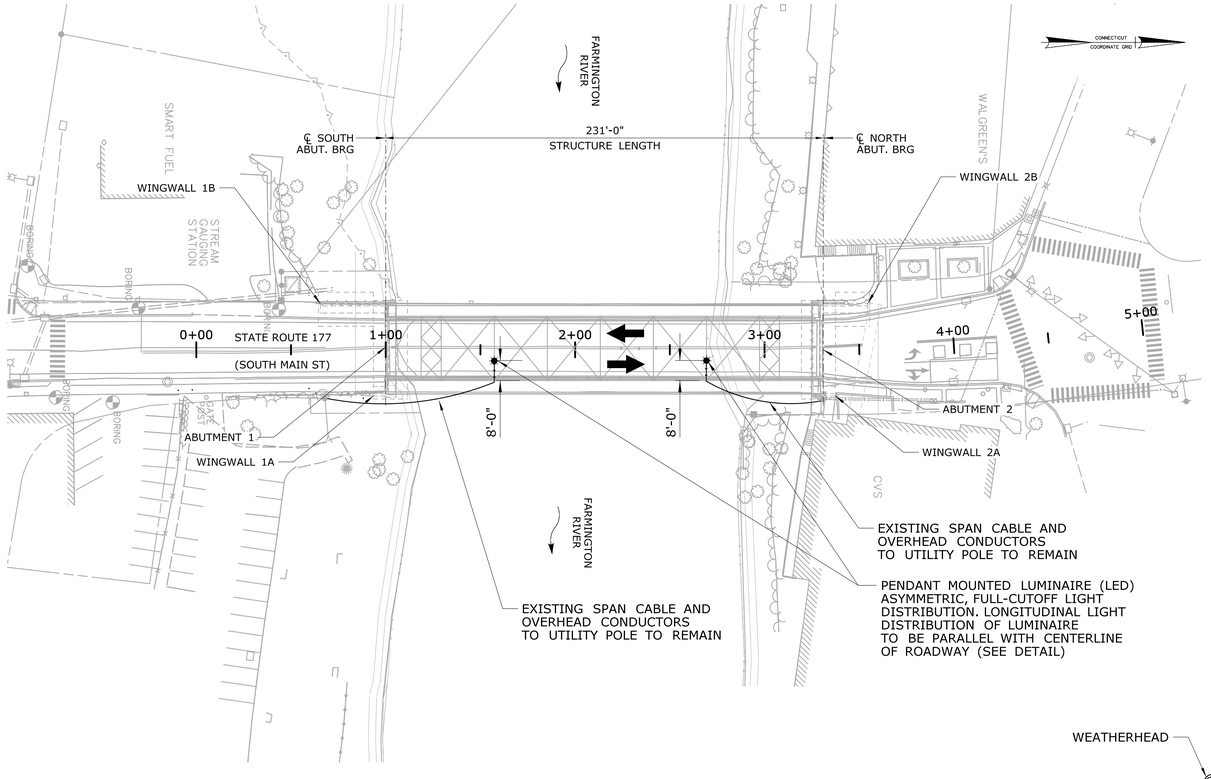

ILLUMINATION PLAN

SCALE: 1" = 40'

ILLUMINATION NOTES:

1) ALL ELECTRICAL WORK SHALL CONFORM TO THE NATIONAL ELECTRIC CODE, AND CONNECTICUT STANDARD SPECIFICATIONS.
2) BRANCH CIRCUIT CONDUCTORS SHALL BE NO. 10 AWG, STRANDED COPPER, INSULATION TYPE THWN AND RATED FOR 600 VOLTS. INSULATION SHALL BE COLORED CROSS LINKED POLYETHELENE (XLP). SINGLE PHASE CIRCUIT COLORS SHALL BE AS FOLLOWS: WHITE, BLACK, RED, GREEN.
3) ALL CONDUIT STRAPS, CLAMPS, AND MOUNTING HARDWARE SHALL BE TYPE 304 STAINLESS STEEL.
4) THE CONTRACTOR SHALL CONTACT EVERSOURCE REPRESENTATIVE ALISHA SAXBY AT 203-271-4770 TO COORDINATE DISCONNECTION/CONNECTION OF THE EXISTING OVERHEAD UTILITY FEEDS TO THE LUMINAIRES.
5) THE CONTRACTOR SHALL CONTACT MARK BEAR OF CONNDOT ELECTRICAL (860-594-2796) TO COMPLETE THE EVERSOURCE REQUEST FOR UN-METERED SERVICE COORDINATION.
6) ROADWAY LIGHTING ON THE BRIDGE SHALL BE MAINTAINED THROUGHOUT ALL STAGES OF CONSTRUCTION (SEE ITEM NO. 1020042A).
7) THE CONTRACTOR SHALL REMOVE AND DISPOSE OF THE TWO EXISTING BRIDGE LUMINAIRES INCLUDING ALL ASSOCIATED SURFACE RMC, CLAMPS, MOUNTINGS, AND CONDUCTORS BACK TO THE EXISTING OVERHEAD UTILITY SERVICE DROPS (TO REMAIN).

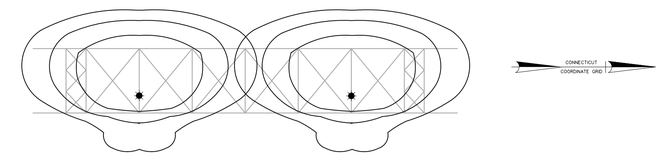

ORIENTATION OF LIGHT DISTRIBUTION

SCALE: 1" = 40'

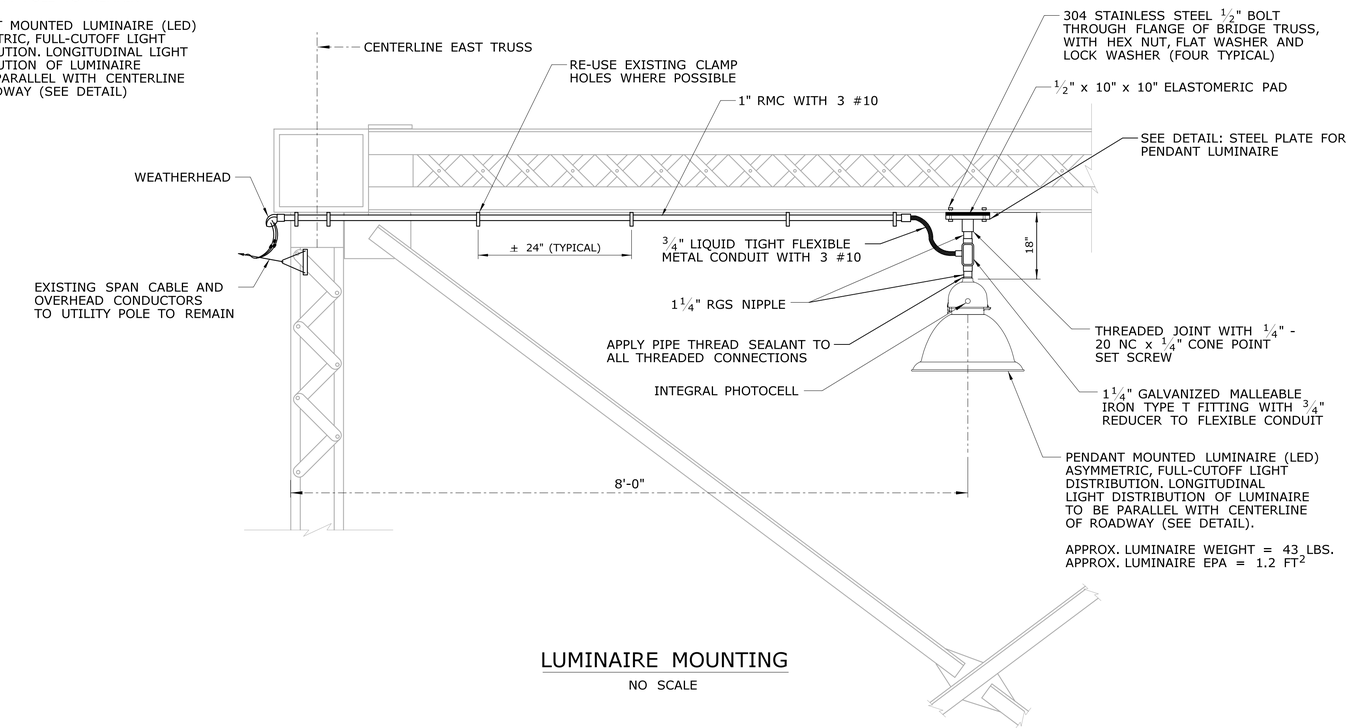

LUMINAIRE MOUNTING

NO SCALE

NOTE:
ENTIRE PLATE ASSEMBLY TO BE HOT DIP GALVANIZED PER A.S.T.M. A123 AFTER FABRICATION

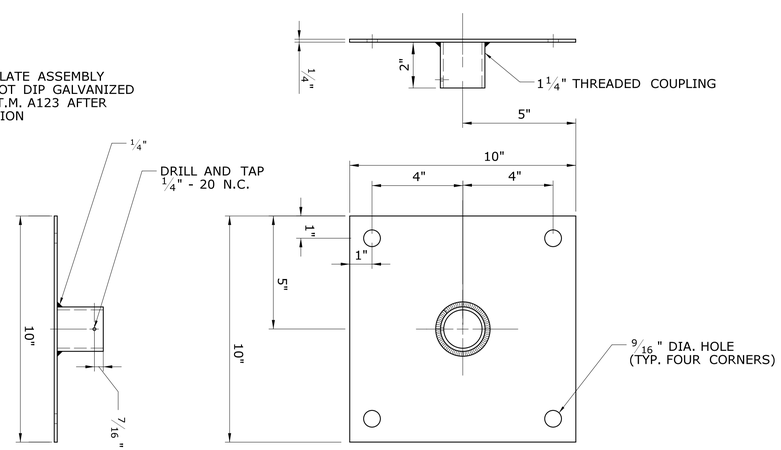

STEEL PLATE FOR PENDANT LUMINAIRE

NO SCALE

REV.	DATE	REVISION DESCRIPTION	SHEET NO.

THE INFORMATION, INCLUDING ESTIMATED QUANTITIES OF WORK, SHOWN ON THESE SHEETS IS BASED ON LIMITED INVESTIGATIONS BY THE STATE AND IS IN NO WAY WARRANTED TO INDICATE THE CONDITIONS OF ACTUAL QUANTITIES OF WORK WHICH WILL BE REQUIRED.

Plotted Date: 8/14/2019

DESIGNER/DRAFTER:

CHECKED BY: JA

SCALE AS NOTED

STATE OF CONNECTICUT
DEPARTMENT OF TRANSPORTATION

Filename: ..\..engineering_data\ILL-02.dgn

SIGNATURE/BLOCK:
OFFICE OF ENGINEERING

APPROVED BY:

PROJECT TITLE:
REHABILITATION OF BRIDGE NOS. 01487 & 03245 RTE 177 OVER FARMINGTON RIVER

TOWN: FARMINGTON

DRAWING TITLE:
ILLUMINATION PLAN AND DETAILS

PROJECT NO. 51-272

DRAWING NO. ILL-02

SHEET NO. 07.02