Shaun Suehr
2020.03.17
12:14:56-04'00'

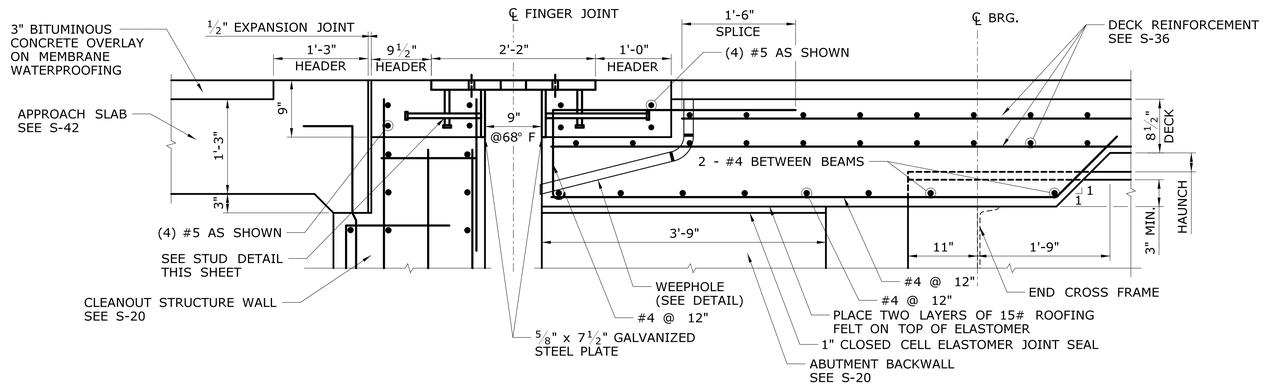

FINGER JOINT SECTION

SCALE: 1" = 1'-0"

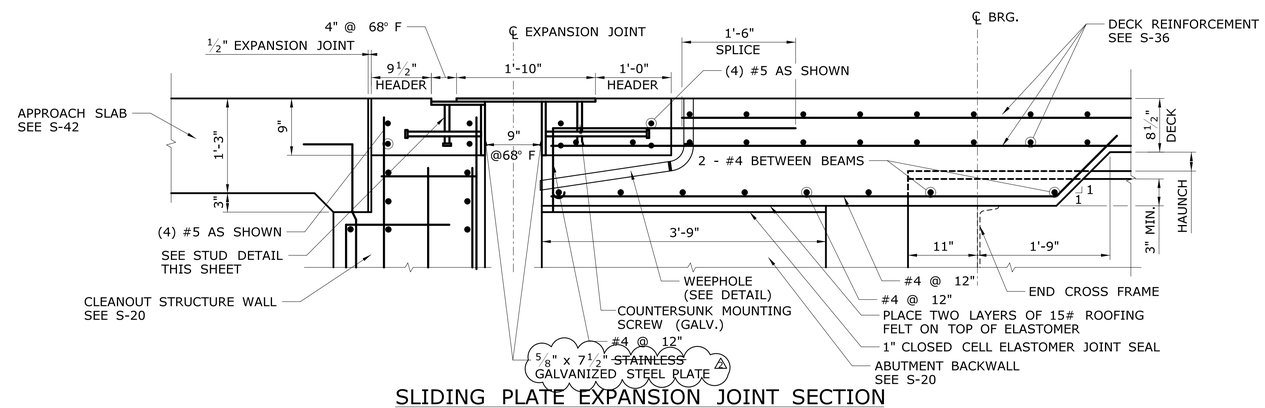

SLIDING PLATE EXPANSION JOINT SECTION

SCALE: 1" = 1'-0"

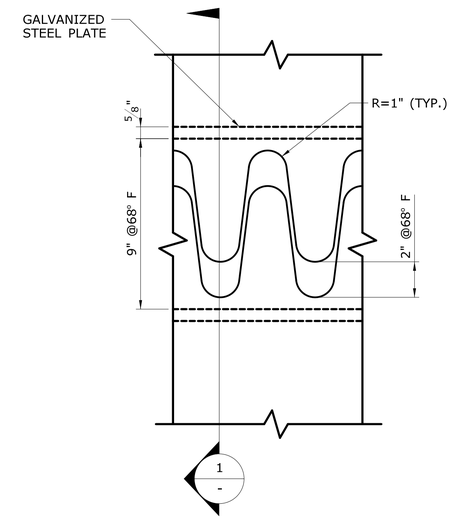

TOOTH PLATE DETAIL

SCALE: 3" = 1'-0"

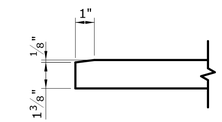

1 - SECTION

SCALE: 3" = 1'-0"

NOTE:
1. TOOTH PLATE SHALL BE MADE BY A SINGLE CUT OF A MACHINE GUIDED TORCH. SHARP CORNERES SHALL BE REMOVED BY GRINDING.

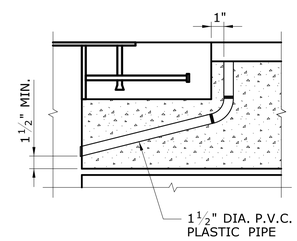

WEEPHOLE DETAIL

SCALE: 1" = 1'-0"

NOTES

1. WORK THIS SHEET WITH S-39.
2. STEEL SHALL CONFORM TO AASHTO A709, GRADE 50 (GALVANIZED).
3. WELDING DETAILS, PROCEDURES AND TESTING METHODS SHALL CONFORM TO THE ANSI/AASHTO/AWS D1.5M/D1.5:2016 BRIDGE WELDING CODE WITH INTERIM REVISIONS, UNLESS OTHERWISE NOTED.
4. USE FLATHEAD ~~STAINLESS STEEL ASTM F 593 TYPE 304~~ GALVANIZED STEEL ASTM F835, ASTM A153, FOR COUNTERSUNK SCREWS WITH INSERTS. ALL CONCRETE INSERTS AND COUNTERSUNK MACHINE SCREWS ARE ¾" DIA. UNLESS OTHERWISE NOTED. △3
5. ALL BOLTS SHALL BE ASTM F3125 GRADE A325 TYPE 3 BOLTS IN STANDARD HOLES UNLESS OTHERWISE NOTED.
6. CONSTRUCT EXPANSION FINGER JOINT ASSEMBLY TO MATCH ROADWAY GRADE AND CROSS SLOPE.
7. PLACE CONCRETE UNDER THE FINGER JOINT ASSEMBLY AND VIBRATE UNTIL THE CONCRETE IS FORCED UP THROUGH THE ⅞" DIA. AIR HOLES. STRIKE OFF EXCESS CONCRETE. AFTER CONCRETE HAS CURED, INSPECT THE HOLES AND REMOVE UNSOUND CONCRETE. CLEAN THE HOLES WITH AN AIR JET AND FILL WITH APPROVED SEALER.
8. SET FINGER JOINT ASSEMBLY AFTER ADJACENT DECKS HAVE BEEN PLACED. DO NOT PLACE CONCRETE IN TOP OF ABUTMENT BACKWALLS UNTIL THE BEAMS, FINGER JOINTS AND DECK SLAB HAVE BEEN PLACED.
9. GRIND ALL EDGES EXPOSED TO TRAFFIC OR PEDESTRIANS TO 3/16" MIN. RADIUS.
10. CONCRETE HEADERS SHALL BE PCC04462 CONCRETE, AND WILL BE INCLUDED UNDER ITEM #0520902A - INSTALLATION OF FINGER JOINTS.
11. THE COST OF FURNISHING AND INSTALLING THE GALVANIZED MESH SHALL BE INCLUDED IN THE PAY ITEM "HMA S0.25".
12. THE COST OF INSTALLING THE WEEPHOLE IN THE CONCRETE DECK SHALL BE INCLUDED IN THE COST FOR "BRIDGE DECK CONCRETE (SIP FORMS)". △1
13. 1½" PVC PIPE DRAINS TO BE PLACED THROUGH THE SLAB WHERE SHOWN ON THE DECK PLAN. COST OF PIPE DRAIN SHALL BE INCLUDED UNDER THE ITEM "1½" POLYVINYL-CHLORIDE PLASTIC PIPE". △1

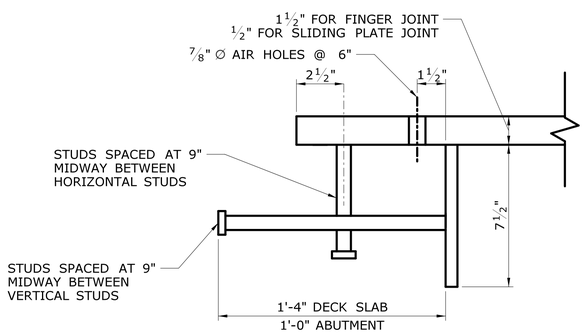

STUD DETAIL

SCALE: 3" = 1'-0"

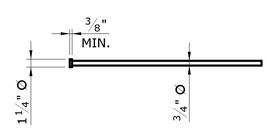

TYPICAL STUD

SCALE: 3" = 1'-0"

NOTE:
1. ALL VERTICAL STUDS SHALL BE ¾" Ø x 6" LONG.
2. HORIZONTAL STUDS IN ABUTMENT TROUGH WALL SHALL BE ¾" Ø x 1'-0" LONG.
3. HORIZONTAL STUDS IN DECK SLAB SHALL BE ¾" Ø x 1'-4" LONG.

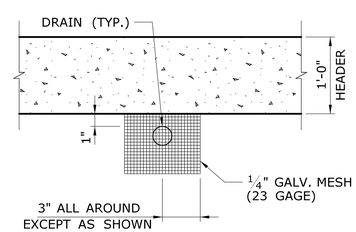

WEEPHOLE DRAIN DETAIL

NOT TO SCALE

ADDENDUM NO. 2

REV.	DATE	REVISION DESCRIPTION	SHEET NO.
△3	3/16/2020	REVISED MATERIAL TYPE	04.02.38.A2
△1	1/14/2020	TEXT CORRECTION	04.02.38.A1

THE INFORMATION, INCLUDING ESTIMATED QUANTITIES OF WORK, SHOWN ON THESE SHEETS IS BASED ON LIMITED INVESTIGATIONS BY THE STATE AND IS IN NO WAY WARRANTED TO INDICATE THE CONDITIONS OF ACTUAL QUANTITIES OF WORK WHICH WILL BE REQUIRED.

Plotted Date: 3/16/2020

DESIGNER/DRAFTER: CS
CHECKED BY: JMK
SCALE AS NOTED

STATE OF CONNECTICUT
DEPARTMENT OF TRANSPORTATION

Filename: ...\SB_MSTL_0096_0201_FINGER JOINT DET_EB.dgn

SIGNATURE/BLOCK: STATE OF CONNECTICUT THOMAS A. HARLEY LICENSED PROFESSIONAL ENGINEER 001490

LOUIS BERGER US
A WSP COMPANY
55 CAPITAL BOULEVARD
ROCKY HILL, CT 06067

PROJECT TITLE:
REHABILITATION OF BRIDGE NO. 01218 - I-84 EB OVER HOUSATONIC RIVER

TOWN: **NEWTOWN/SOUTHBURY**

DRAWING TITLE: **FINGER JOINT DETAILS**

PROJECT NO. **96-201**
DRAWING NO. **S-38**
SHEET NO. **04.02.38.A2**

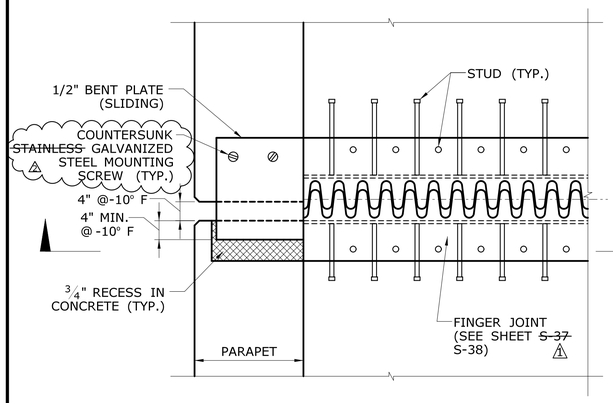

SLIDING PLATE EXPANSION JOINT
FASCIA PARAPET PLAN

SCALE: 3/4" = 1'-0"

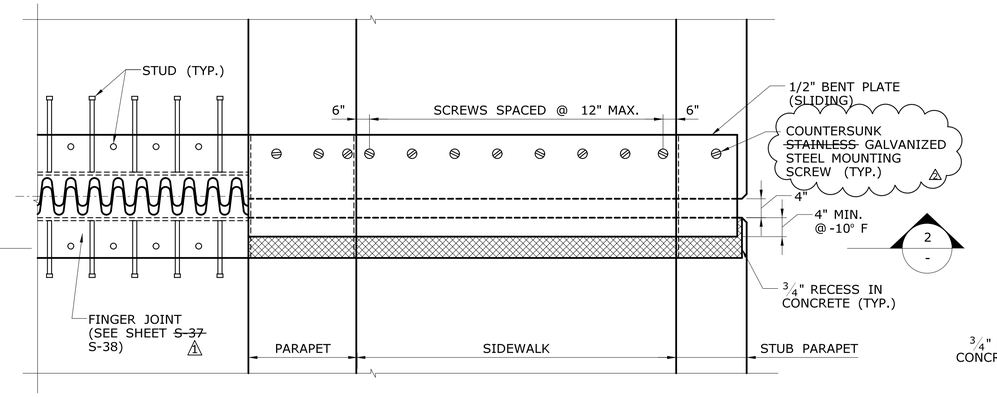

SLIDING PLATE EXPANSION JOINT
INTERIOR PARAPET & SIDEWALK PLAN

SCALE: 3/4" = 1'-0"

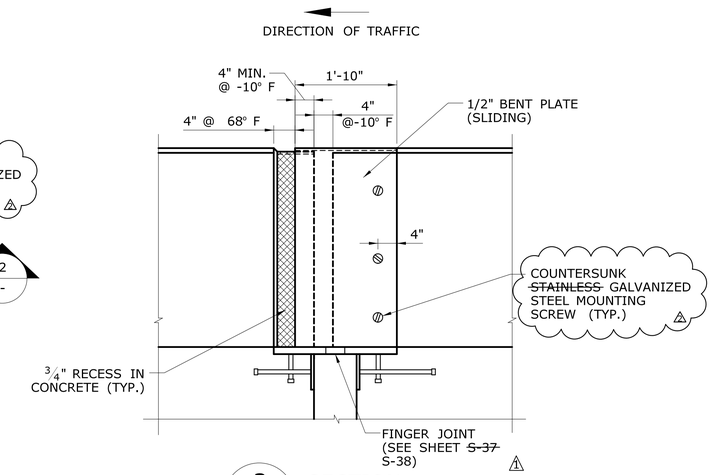

3 SECTION
SCALE: 3/4" = 1'-0"

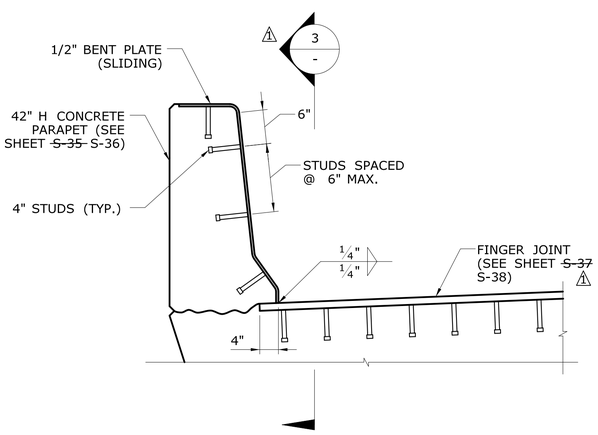

1 SECTION
SCALE: 3/4" = 1'-0"

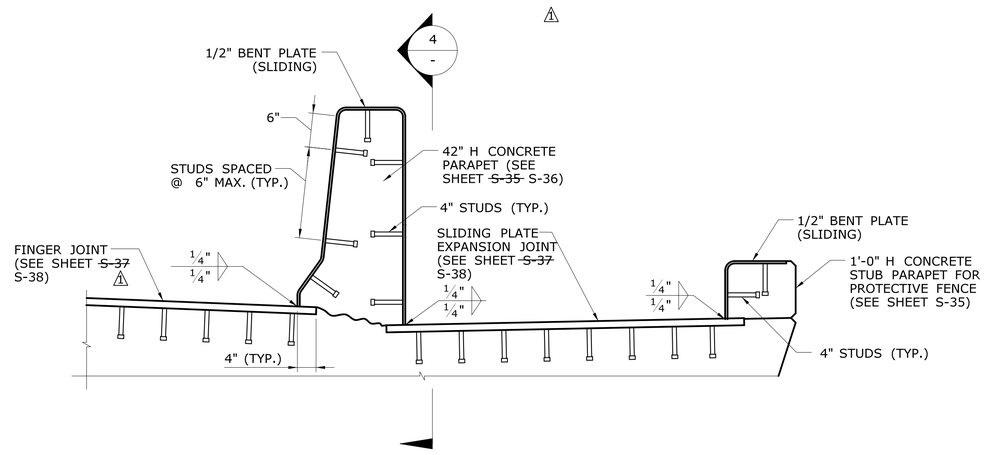

2 SECTION
SCALE: 3/4" = 1'-0"

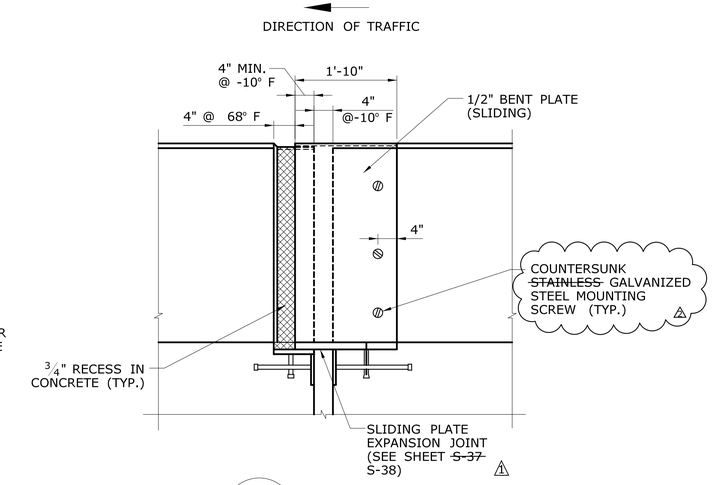

4 SECTION
SCALE: 3/4" = 1'-0"

NOTES:

1. WORK THIS SHEET WITH S-38.
2. SLIDING PLATES TO BE PAID FOR UNDER ITEM "INSTALLATION OF FINGER JOINTS".

ADDENDUM NO. 2

REV.	DATE	REVISION DESCRIPTION	SHEET NO.
2	03/16/2020	REVISED MATERIAL TYPE	04.02.39.A2
1	01/27/2020	PARAPET AND SHEET REFERENCE NO. REVISION	04.02.39.A1

THE INFORMATION, INCLUDING ESTIMATED QUANTITIES OF WORK, SHOWN ON THESE SHEETS IS BASED ON LIMITED INVESTIGATIONS BY THE STATE AND IS IN NO WAY WARRANTED TO INDICATE THE CONDITIONS OF ACTUAL QUANTITIES OF WORK WHICH WILL BE REQUIRED.

Plotted Date: 3/16/2020

DESIGNER/DRAFTER: CS
CHECKED BY: JMK
SCALE AS NOTED

STATE OF CONNECTICUT
DEPARTMENT OF TRANSPORTATION

Filename: ...\SB_MSTL_0096_0201_PARAPET EXPANSION JOINT DET_EB.dgn

SIGNATURE/BLOCK: STATE OF CONNECTICUT THOMAS A HARLEY 001480 LICENSED PROFESSIONAL ENGINEER

LOUIS BERGER US
A WSP COMPANY
55 CAPITAL BOULEVARD
ROCKY HILL, CT 06067

PROJECT TITLE:
REHABILITATION OF BRIDGE NO. 01218 - I-84 EB OVER HOUSATONIC RIVER

TOWN: **NEWTOWN/SOUTHBURY**

DRAWING TITLE: **PARAPET EXPANSION JOINT DETAILS**

PROJECT NO. **96-201**
DRAWING NO. **S-39**
SHEET NO. **04.02.39.A2**

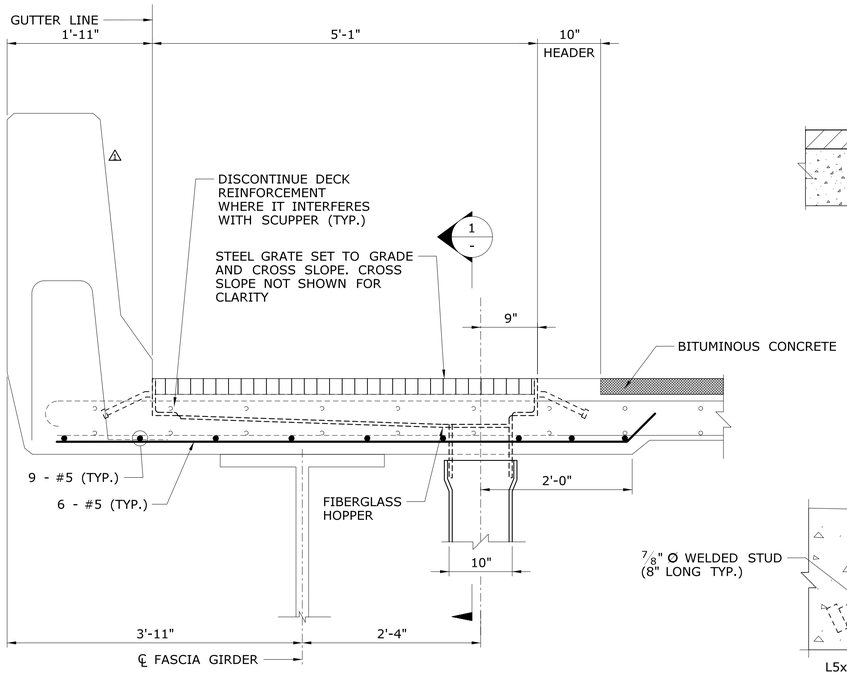

BRIDGE FASCIA SCUPPER SECTION
SCALE: 1" = 1'-0"

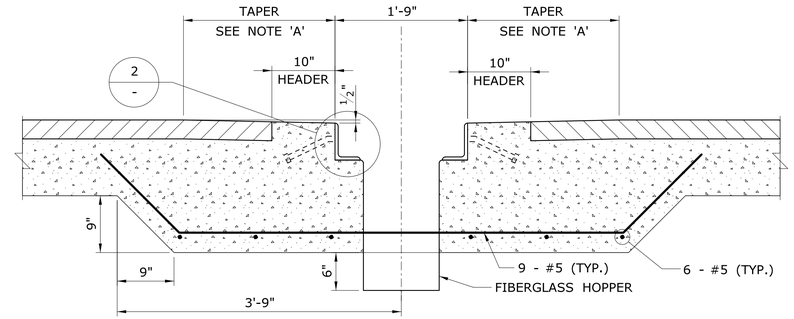

SECTION
SCALE: 1" = 1'-0"

NOTE 'A'
LENGTH OF TAPER SHALL BE 3'-0" AT UPGRADE SIDE AND 2'-0" ELSEWHERE.

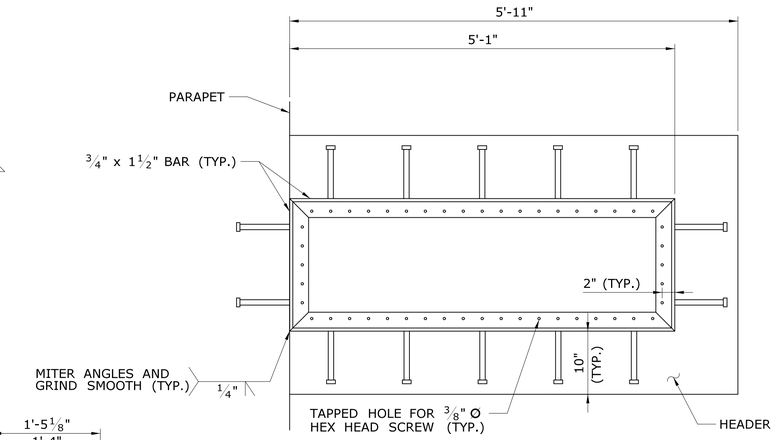

PLAN AT FRAME
SCALE: 1" = 1'-0"

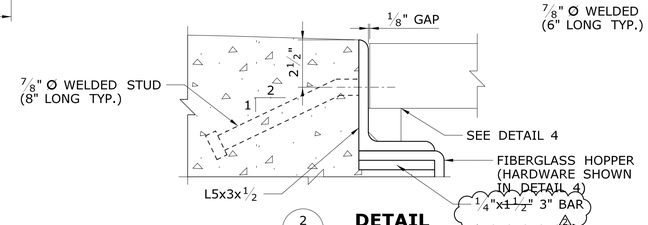

DETAIL
SCALE: 3" = 1'-0"

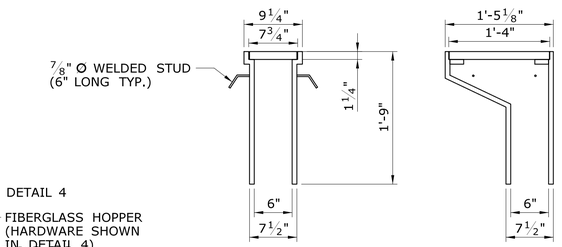

SIDEWALK SCUPPER BASIN
SCALE: 1" = 1'-0"

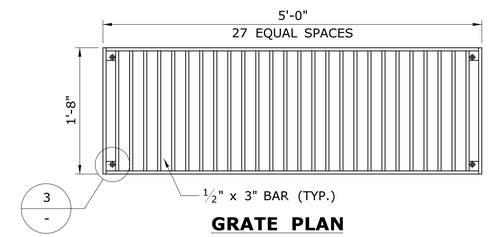

GRATE PLAN
SCALE: 1" = 1'-0"

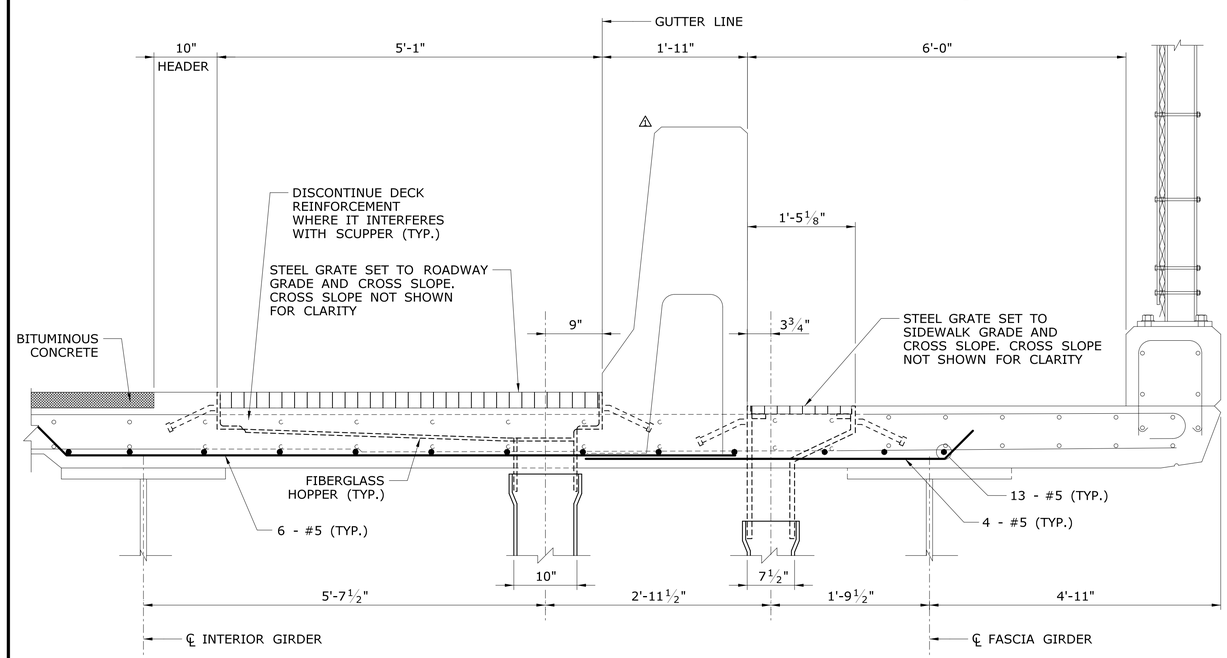

BRIDGE AND SIDEWALK SCUPPER SECTION
SCALE: 1" = 1'-0"

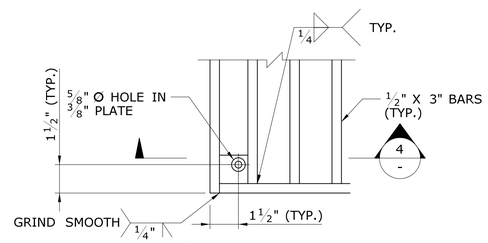

DETAIL
SCALE: 3" = 1'-0"

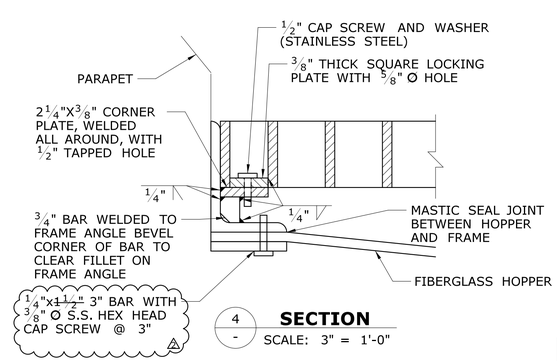

SECTION
SCALE: 3" = 1'-0"

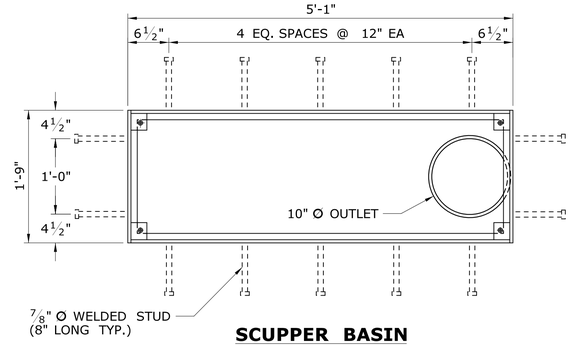

SCUPPER BASIN
SCALE: 1" = 1'-0"

NOTES:

1. SCUPPERS, GRATING AND ALL ASSOCIATED HARDWARE FOR BRIDGE SCUPPER TO BE PAID FOR UNDER ITEM "BRIDGE SCUPPER - TYPE A". SCUPPERS, GRATING AND ALL ASSOCIATED HARDWARE FOR SIDEWALK SCUPPER TO BE PAID FOR UNDER ITEM "BRIDGE SCUPPER - TYPE B". SEE SPECIAL PROVISIONS.
2. ~~DRAINAGE PIPE, PIPE SUPPORTS, ATTACHMENT TO GIRDERS AND ALL ASSOCIATED HARDWARE TO BE PAID FOR UNDER THE APPROPRIATE PIPE FOR BRIDGE DRAINAGE ITEM. SEE SPECIAL PROVISIONS~~
3. ALL GRATING, FRAME, STUDS, HARDWARE AND ATTACHMENTS SHALL BE GALVANIZED IN ACCORDANCE WITH ASTM A123 OR A153 AS APPROPRIATE.

ADDENDUM NO. 2

REV.	DATE	REVISION DESCRIPTION	SHEET NO.
2	03/16/2020	REVISED BAR SIZE	04.02.40.A2
1	01/16/2020	REVISED PARAPET SHAPE, REVISED TITLE OF DETAIL	04.02.40.A1

THE INFORMATION, INCLUDING ESTIMATED QUANTITIES OF WORK, SHOWN ON THESE SHEETS IS BASED ON LIMITED INVESTIGATIONS BY THE STATE AND IS IN NO WAY WARRANTED TO INDICATE THE CONDITIONS OF ACTUAL QUANTITIES OF WORK WHICH WILL BE REQUIRED.

Plotted Date: 3/16/2020

DESIGNER/DRAFTER: CS
CHECKED BY: JPM
SCALE AS NOTED

STATE OF CONNECTICUT
DEPARTMENT OF TRANSPORTATION

Filename: ...\SB_MSTL_0096_0201_SCUPPER_DET 1 - EB.dgn

SIGNATURE/BLOCK: STATE OF CONNECTICUT THOMAS A. HARLEY 001490 LICENSED PROFESSIONAL ENGINEER

LOUIS BERGER US
A WSP COMPANY
55 CAPITAL BOULEVARD
ROCKY HILL, CT 06067

PROJECT TITLE:
REHABILITATION OF BRIDGE NO. 01218 - I-84 EB OVER HOUSATONIC RIVER

TOWN: **NEWTOWN/SOUTHBURY**

DRAWING TITLE: **SCUPPER DETAILS - 1**

PROJECT NO. **96-201**
DRAWING NO. **S-40**
SHEET NO. **04.02.40.A2**