04.01 - I-84WB OVER HOUSATONIC RIVER (BR. 04180)
INDEX OF DRAWINGS

DRAWING NUMBER	DRAWING TITLE	DRAWING NUMBER	DRAWING TITLE
S-01	STRUCTURES INDEX OF DRAWINGS - BR. 04180	S-26	PIER DETAILS - 2
S-02	GENERAL PLAN AND ELEVATION	S-27	PIER 3 CUT/FILL LIMITS
S-03	GENERAL NOTES	S-28	FRAMING PLAN
S-04	TYPICAL BRIDGE CROSS SECTIONS	S-29	GIRDER ELEVATION
S-05	PIER DEMOLITION DETAILS	S-30	GIRDER DETAILS
S-06	ABUTMENT 1 DEMOLITION DETAILS	S-31	CAMBER TABLE
S-07	ABUTMENT 2 DEMOLITION DETAILS	S-32	BOLTED FIELD SPLICE DETAILS
S-08	ABUTMENT 1 WINGWALL DEMOLITION	S-33	TYPICAL CROSS FRAME DETAILS
S-09	ABUTMENT 2 WINGWALL DEMOLITION	S-34	BEARING DETAILS - 1
S-10	CONC. DETERIORATIONS - ABUTMENTS	S-35	BEARING DETAILS - 2
S-11	CONC. DETERIORATIONS - PIER 1	S-36	SLAB PLAN
S-12	CONC. DETERIORATIONS - PIER 2	S-37	SLAB SECTION AND DETAILS
S-13	CONC. DETERIORATIONS - PIER 3	S-38	SLAB ELEVATIONS
S-14	SUBSTRUCTURE REPAIR DETAILS - 1	S-39	FINGER JOINT DETAILS
S-15	SUBSTRUCTURE REPAIR DETAILS - 2	S-40	PARAPET EXPANSION JOINT DETAILS
S-16	SUBSTRUCTURE REPAIR DETAILS - 3	S-41	SCUPPER DETAILS - 1
S-17	ABUTMENT 1 PLAN & ELEVATION	S-42	SCUPPER DETAILS - 2
S-18	ABUTMENT 2 PLAN & ELEVATION	S-43	APPROACH SLAB DETAILS
S-19	ABUTMENT DETAILS - 1	S-44	STRUCTURE RELATED ELECTRICAL DETAILS - 1
S-20	ABUTMENT DETAILS - 2	S-45	STRUCTURE RELATED ELECTRICAL DETAILS - 2
S-21	ABUTMENT 1 WINGWALL ELEVATIONS	S-46	CONDUIT EXPANSION FITTINGS
S-22	ABUTMENT 2 WINGWALL ELEVATIONS	S-47	TEMPORARY PRECAST CONCRETE BARRIER (STRUCTURE) 1
S-23	ABUTMENT WINGWALL DETAILS		
S-24	PIER PLAN & ELEVATION		
S-25	PIER DETAILS - 1		

LOUIS BERGER US, INC.
55 CAPITAL BOULEVARD
ROCKY HILL, CT 06067

STATE OF CONNECTICUT
SHAUN SUEHR
No. 32182
LICENSED
PROFESSIONAL ENGINEER

Shaun Suehr
2020.02.24
10:31:23-05'00'

ADDENDUM NO. 1

REV.	DATE	REVISION DESCRIPTION	SHEET NO.
1	1/13/2020	DRAWING INDEX REVISION	04.02.01.A1

THE INFORMATION, INCLUDING ESTIMATED QUANTITIES OF WORK, SHOWN ON THESE SHEETS IS BASED ON LIMITED INVESTIGATIONS BY THE STATE AND IS IN NO WAY WARRANTED TO INDICATE THE CONDITIONS OF ACTUAL QUANTITIES OF WORK WHICH WILL BE REQUIRED.

Plotted Date: 1/17/2020

DESIGNER/DRAFTER: CS
CHECKED BY: BY

STATE OF CONNECTICUT
DEPARTMENT OF TRANSPORTATION

Filename: ..\SB..MSH..0096..0201..SUBSET COVER..STRUCTURES..WB.dgn

SIGNATURE/BLOCK: STATE OF CONNECTICUT THOMAS A. HARLEY 001490 LICENSED PROFESSIONAL ENGINEER

LOUIS BERGER US
A WSP COMPANY
55 CAPITAL BOULEVARD
ROCKY HILL, CT 06067

PROJECT TITLE:
REHABILITATION OF BRIDGE NO 04180 - I-84 WB OVER HOUSATONIC RIVER

TOWN: **NEWTOWN/SOUTHBURY**

DRAWING TITLE: **STRUCTURES INDEX OF DRAWINGS - BR. 04180**

PROJECT NO. **96-201**
DRAWING NO. **S-01**
SHEET NO. **04.01.01.A1**

ESTIMATED QUANTITIES

ITEM	UNIT	QUANTITY
STRUCTURE EXCAVATION-EARTH (COMPLETE)	CY	268
PERVIOUS STRUCTURE BACKFILL	CY	2362
PMA S0.5	TON	630
HMA S0.25	TON	320
REMOVAL OF SUPERSTRUCTURE	LS	LS
SHEAR CONNECTORS	EA	15400
BRIDGE SCUPPER - TYPE A	EA	12
6" PIPE FOR BRIDGE DRAINAGE	LF	25
$1\frac{1}{2}$" POLYVINYL CHLORIDE PLASTIC PIPE	LF	6
4" POLYVINYL CHLORIDE PLASTIC PIPE	LF	72
INSTALLATION OF FINGER JOINTS	LF	120
ELASTOMERIC BEARINGS	EA	6
POT, SPHERICAL OR DISC BEARINGS (300 KIPS)	EA	12
POT, SPHERICAL OR DISC BEARINGS (900 KIPS)	EA	6
POT, SPHERICAL OR DISC BEARINGS (950 KIPS)	EA	6
FOOTING CONCRETE (MASS)	CY	124
ABUTMENT AND WALL CONCRETE	CY	519
COLUMN AND CAP CONCRETE (MASS)	CY	378
SURFACE REPAIR CONCRETE	CF	225
BRIDGE DECK CONCRETE (SIP FORMS)	CY	1550
PARAPET CONCRETE	LF	1738
APPROACH SLAB CONCRETE	CY	100
1/2" PREFORMED EXPANSION JOINT FILLER FOR BRIDGES	SF	244
1" PREFORMED EXPANSION JOINT FILLER FOR BRIDGES	SF	80
1" CLOSED CELL ELASTOMER	CI	64800
EPOXY INJECTION CRACK REPAIR	LF	80
DEFORMED STEEL BARS - GALVANIZED	LB	575500
DRILLING HOLES AND GROUTING DOWELS	EA	2122
STRUCTURAL STEEL (SITE NO. 1)	LS	LS
EMBEDDED GALVANIC ANODES	EA	1500
MEMBRANE WATERPROOFING (COLD LIQUID ELASTOMERIC)	SY	5600
DAMPPROOFING	SY	1017
PENETRATING SEALER PROTECTIVE COMPOUND	SY	980
TEMPORARY PRECAST CONCRETE BARRIER CURB (STRUCTURE)	LF	832
REMOVAL OF EXISTING MASONRY	CY	371
ASBESTOS ABATEMENT	LS	LS
LEAD COMPLIANCE FOR MISCELLANEOUS EXTERIOR TASKS	LS	LS

NOTE: FOR ELECTRICAL ITEMS, SEE DETAILED ESTIMATE SHEETS.

CONCRETE DISTRIBUTION

SUPERSTRUCTURE	C.Y.	1975
SUBSTRUCTURE	C.Y.	941
FOOTINGS	C.Y.	124
TOTAL	C.Y.	3040

GENERAL NOTES:

SPECIFICATIONS:
CONNECTICUT DEPARTMENT OF TRANSPORTATION FORM 817 (2016), SUPPLEMENTAL SPECIFICATION DATED JANUARY 2019 AND SPECIAL PROVISIONS.

DESIGN SPECIFICATIONS:
AASHTO LRFD BRIDGE DESIGN SPECIFICATIONS (EIGHTH EDITION, 2017) AND PCI BRIDGE DESIGN MANUAL (THIRD EDITION, 2014), AS SUPPLEMENTED BY THE CONNECTICUT DEPARTMENT OF TRANSPORTATION BRIDGE DESIGN MANUAL (2003) WITH UPDATES UP TO AND INCLUDING (APRIL 2019).

ALLOWABLE DESIGN STRESSES:

CONCRETE:
CLASS PCC 03340 f'c = 3,000 PSI
CLASS PCC 0446Z f'c = 4,000 PSI

REINFORCEMENT:
(ASTM A615 GRADE 60) Fy = 60,000 PSI

STRUCTURAL STEEL:
(AASHTO M270, GRADE 50 WT2) Fy = 50,000 PSI

THE CONCRETE STRENGTH, f'c , USED IN DESIGN OF THE CONCRETE COMPONENTS IS NOTED ABOVE. THE COMPRESSIVE STRENGTH OF THE CONCRETE IN THE CONSTRUCTED COMPONENTS SHALL CONFORM TO THE REQUIREMENTS OF 6.01 - CONCRETE FOR STRUCTURES, AND M.03 - PORTLAND CEMENT CONCRETE.

LIVE LOAD:
HL-93, LEGAL AND PERMIT VEHICLES

FUTURE PAVING ALLOWANCE:
NONE

STRUCTURAL STEEL:
SEE STRUCTURAL STEEL NOTES ON DWG. NO. ~~S-25~~ S-28 FOR DESIGNATIONS AND REQUIREMENTS.

PAINT:
NO PAINTING OF STRUCTURAL STEEL IS REQUIRED. STEEL SURFACES ARE TO BE PREPARED FOR WEATHERING IN ACCORDANCE WITH THE SPECIFICATIONS.

BITUMINOUS CONCRETE OVERLAY:
3" BITUMINOUS CONCRETE OVERLAY TO CONSIST OF 2" PMA S0.5 TRAFFIC LEVEL 3 ON 1" HMA S0.25 TRAFFIC LEVEL 2.

FOUNDATION PRESSURES:
THE VARIOUS GROUP LOADINGS NOTED ON THE SUBSTRUCTURE PLAN SHEETS REFER TO THE GROUP LOADS AS GIVEN IN THE AASHTO LRFD BRIDGE DESIGN SPECIFICATIONS.

DIMENSIONS:
WHEN DECIMAL DIMENSIONS ARE GIVEN TO LESS THAN THREE DECIMAL PLACES, THE OMITTED DIGITS SHALL BE ASSUMED TO BE ZEROS.

EXISTING DIMENSIONS:
DIMENSIONS OF THE EXISTING STRUCTURE SHOWN ON THESE PLANS ARE FOR GENERAL REFERENCE ONLY. THEY HAVE BEEN TAKEN FROM THE ORIGINAL DESIGN DRAWINGS AND ARE NOT GUARANTEED. THE CONTRACTOR SHALL TAKE ALL FIELD MEASUREMENTS NECESSARY TO ASSURE PROPER FIT OF THE FINISHED WORK AND SHALL ASSUME FULL RESPONSIBILITY FOR THEIR ACCURACY. WHEN SHOP DRAWINGS BASED ON FIELD MEASUREMENTS ARE SUBMITTED FOR APPROVAL, THE FIELD MEASUREMENTS SHALL ALSO BE SUBMITTED FOR REFERENCE BY THE REVIEWER.

ELEVATIONS:
ELEVATIONS SHOWN ARE TAKEN FROM EXISTING DRAWINGS AND CONVERTED TO 1988 NAVD USING AN APPROXIMATE CONVERSION OF THE NGVD 1929 -0.95

UTILITIES:
THE CONTRACTOR SHALL VERIFY THE SIZE AND LOCATION OF ALL UTILITIES WITHIN THE PROJECT LIMITS PRIOR TO THE START OF CONSTRUCTION AND SHALL TAKE NECESSARY PRECAUTIONS WHEN WORKING NEAR UTILITIES SO AS TO NOT DISTURB THEM OR PLACE ANY LOAD OR EQUIPMENT ON THEM. ALL UTILITY COMPANIES SHALL BE NOTIFIED 48 HOURS PRIOR TO ANY WORK AFFECTING CABLES, CONDUITS, OR OTHER UTILITIES.

BRIDGE IDENTIFICATION PLACARDS:
THE CONTRACTOR SHALL PROVIDE AND INSTALL NEW BRIDGE IDENTIFICATION SIGNS AT THE LEADING END OF EACH BRIDGE PARAPET ON THE TRAFFIC SIDE. THE SIGNS SHALL BE FABRICATED WITH 40 GAUGE ALUMINUM SHEET METAL. THE SIGNS SHALL BE 4"X12" WITH 3" WHITE REFLECTIVE BLOCK LETTERS ON GREEN REFLECTIVE SHEETING. EACH SIGN SHALL READ: 01218. ALL COST ASSOCIATED WITH PROVIDING AND INSTALLING THE BRIDGE SIGNS SHALL BE COVERED UNDER THE ITEM NO. 1208931A "SIGN FACE SHEET ALUMINUM (TYPE IX RETROREFLECTIVE SHEETING)". THE FINAL LOCATION AND ATTACHMENT METHOD FOR THE SIGNS SHALL BE APPROVED BY THE ENGINEER PRIOR TO INSTALLATION.

FUTURE NOISE WALL:
THIS STRUCTURE WAS DESIGNED TO SUPPORT FUTURE 14 FT HIGH NOISE WALLS (MEASURED FROM THE TOP OF THE 42 IN HIGH CONCRETE PARAPETS) WHICH WOULD BE ATTACHED TO THE CONCRETE PARAPETS ALONG EACH SIDE OF THE ROADWAY. THE DEAD LOAD FOR EACH NOISE WALL WAS ASSUMED TO BE 400 LB/FT AND THE UNFACTORED WIND PRESSURE WAS CALCULATED TO BE 50 PSF.

INSPECTION OF FIELD WELDS

METHOD	UNIT	QUANTITY
ULTRASONIC	IN.	NONE
MAGNETIC PARTICLE	FT.	NONE

CONCRETE NOTES:

REMAIN-IN-PLACE FORMS:
THE USE OF REMAIN-IN-PLACE FORMS SHALL BE ALLOWED INSIDE BAYS OF THE WELDED PLATE GIRDERS ONLY. THE PLATE GIRDERS HAVE BEEN DESIGNED FOR THE ADDITIONAL WEIGHT OF 15 POUNDS PER SQUARE FOOT FOR THE REMAIN-IN-PLACE FORMS BETWEEN THE GIRDERS.

COMPOSITE CONSTRUCTION:
NO TEMPORARY INTERMEDIATE SUPPORTS SHALL BE USED DURING THE PLACING AND SETTING OF THE CONCRETE DECK SLAB. TEMPORARY SUPPORTS MAY BE USED FOR STRUCTURAL STEEL ERECTION ONLY. CONSTRUCTION LOADS AND DEAD LOADS WILL BE PERMITTED WHEN DIRECTED BY THE ENGINEER BUT ONLY WHEN THE CONCRETE HAS REACHED A STRENGTH OF f'c = 3,500 PSI. LIVE LOADS (TRAFFIC) WILL BE PERMITTED ON THE STRUCTURE AFTER THE CONCRETE HAS REACHED A STRENGTH OF f'c = 4,000 PSI.

CONCRETE:
THE FOLLOWING PAY ITEMS AND CONCRETE CLASSES ARE REQUIRED FOR CAST-IN-PLACE BRIDGE COMPONENTS:

ITEM	BRIDGE COMPONENTS	PCC CLASS
FOOTING CONCRETE (MASS)	PIER 3 COLLAR AT FOOTING	PCC03340
ABUTMENT AND WALL CONCRETE	ABUTMENT AND WINGWALL STEMS, BACKWALL, OUTLET STRUCTURE, CONCRETE BEARING PEDESTALS, CHEEKWALLS	PCC03340
APPROACH SLAB CONCRETE	APPROACH SLABS	PCC04460
BRIDGE DECK CONCRETE (SIP FORMS)	BRIDGE DECK	PCC04462
COLUMN AND CAP CONCRETE (MASS)	PIER CAPS AND CONCRETE BEARING PEDESTALS	PCC04460
PARAPET CONCRETE	WINGWALL PARAPET	PCC04462
	BRIDGE PARAPET	PCC04462
SURFACE REPAIR CONCRETE	ABUTMENT AND PIER SURFACE REPAIR	PCC04481

EXPOSED EDGES:
EXPOSED EDGES OF CONCRETE SHALL BE BEVELED 1"x1" UNLESS DIMENSIONED OTHERWISE.

CONCRETE COVER:
ALL REINFORCEMENT SHALL HAVE TWO INCHES COVER UNLESS DIMENSIONED OTHERWISE.

REINFORCEMENT:
ALL REINFORCEMENT SHALL BE GALVANIZED AFTER FABRICATION UNLESS NOTED OTHERWISE. ALL REINFORCEMENT SHALL CONFORM TO THE REQUIREMENTS OF ASTM A767, CLASS 1, INCLUDING SUPPLEMENTAL REQUIREMENTS. THE COST OF FURNISHING AND PLACING THIS REINFORCEMENT SHALL BE INCLUDED IN THE ITEM "DEFORMED STEEL BARS - GALVANIZED".

FELT:
THE COST OF FURNISHING AND PLACING 15-POUND ROOFING FELT IS INCLUDED IN THE ITEM "BRIDGE DECK CONCRETE (SIP FORMS)".

PREFORMED EXPANSION JOINT FILLER:
THE COST OF FURNISHING AND INSTALLING PREFORMED EXPANSION JOINT FILLER SHALL BE PAID FOR AS "1" PREFORMED EXPANSION JOINT FILLER FOR BRIDGES" OR "1/2" PREFORMED EXPANSION JOINT FILLER FOR BRIDGES".

CLOSED CELL ELASTOMER:
FURNISHING AND INSTALLING CLOSED CELL ELASTOMER SHALL BE INCLUDED IN THE ITEM "1" CLOSED CELL ELASTOMER".

CONSTRUCTION JOINTS:
CONSTRUCTION JOINTS, OTHER THAN THOSE SHOWN ON THE PLANS, WILL NOT BE PERMITTED WITHOUT THE PRIOR APPROVAL OF THE ENGINEER.

JOINT SEAL:
SEE SPECIAL PROVISIONS.

HYDRAULIC DATA

DRAINAGE AREA (SQ. MI.)	1,510
DESIGN FREQUENCY (YR)	100
DESIGN DISCHARGE (CFS)	126,000[1]
AVERAGE DAILY FLOW ELEVATION (FT)	100[2]
UPSTREAM DESIGN WATER SURFACE ELEV. (FT)	108[1]
DOWNSTREAM DESIGN WATER SURFACE ELEV. (FT)	108[1]
MAXIMUM SCOUR ELEVATION (FT)	42[3]
FREQUENCY (YR)	500
DISCHARGE (CFS)	196,000[1]
WORST CASE SCOUR SUB-STRUCTURE UNIT	PIER 1

NOTE: ELEVATIONS PROVIDED REFER TO NAVD88 DATUM.
[1] FAIRFIELD COUNTY FLOOD INSURANCE STUDY, OCT. 16, 2013
[2] NORMAL POOL ELEVATION (PROJ. NO. 96-115 AS-BUILT PLANS)
[3] ESTIMATED FROM LEVEL 1 SCOUR ANALYSIS REPORT, DATED SEPT. 21 2018

NOTICE TO BRIDGE INSPECTORS

THE DEPARTMENT'S BRIDGE SAFETY PROCEDURES REQUIRE THIS BRIDGE TO BE INSPECTED FOR, BUT NOT LIMITED TO, ALL APPROPRIATE COMPONENTS INDICATED IN THE GOVERNING MANUALS FOR BRIDGE INSPECTION. ATTENTION MUST BE GIVEN TO INSPECTING THE FOLLOWING SPECIAL COMPONENTS AND DETAILS. (THE LISTING OF COMPONENTS FOR SPECIFIC ATTENTION SHALL NOT BE CONSTRUED TO REDUCE THE IMPORTANCE OF ANY OTHER COMPONENT OF THE STRUCTURE.) THE FREQUENCY OF INSPECTION OF THIS STRUCTURE SHALL BE IN ACCORDANCE WITH THE GOVERNING MANUALS FOR BRIDGE INSPECTION, UNLESS OTHERWISE DIRECTED BY THE MANAGER OF BRIDGE SAFETY AND EVALUATION.

COMPONENT OR DETAIL	DRAWING NUMBER REFERENCE
NONE	-

ADDENDUM NO. 1

REV.	DATE	REVISION DESCRIPTION	SHEET NO.
1	1/16/2020	DETAILING REVISIONS	04.01.03.A1

THE INFORMATION, INCLUDING ESTIMATED QUANTITIES OF WORK, SHOWN ON THESE SHEETS IS BASED ON LIMITED INVESTIGATIONS BY THE STATE AND IS IN NO WAY WARRANTED TO INDICATE THE CONDITIONS OF ACTUAL QUANTITIES OF WORK WHICH WILL BE REQUIRED.

Plotted Date: 2/24/2020

DESIGNER/DRAFTER: CS
CHECKED BY: JMK

STATE OF CONNECTICUT
DEPARTMENT OF TRANSPORTATION

Filename: ...\SB_MSTL_0096_0201_GEN NOTES.dgn

SIGNATURE/BLOCK: STATE OF CONNECTICUT THOMAS A. HARRIGAN 0014890 LICENSED PROFESSIONAL ENGINEER

LOUIS BERGER US
A WSP COMPANY
55 CAPITAL BOULEVARD
ROCKY HILL, CT 06067

PROJECT TITLE:
REHABILITATION OF BRIDGE NO. 04180 - I-84 WB OVER HOUSATONIC RIVER

TOWN: **NEWTOWN/SOUTHBURY**

DRAWING TITLE: **GENERAL NOTES**

PROJECT NO. **96-201**
DRAWING NO. **S-03**
SHEET NO. **04.01.03.A1**

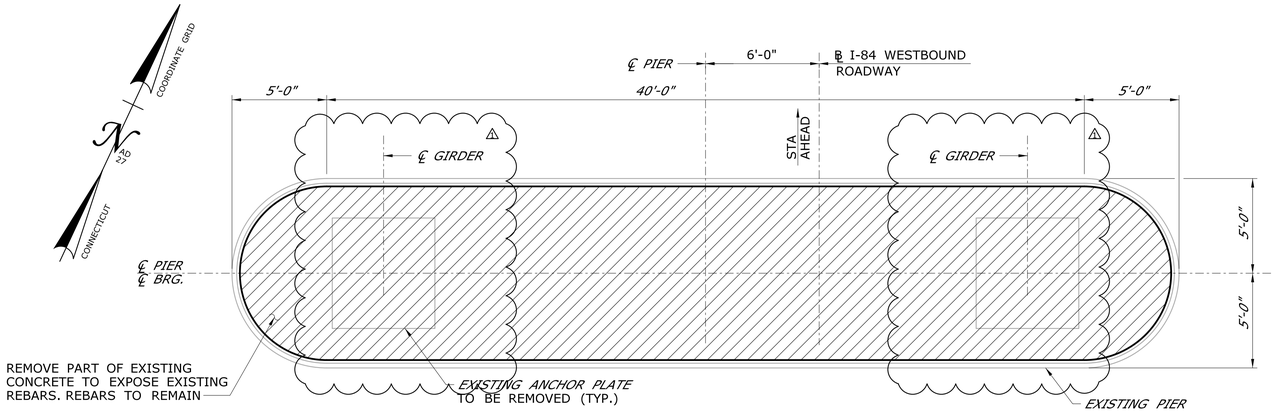

PLAN
SCALE: 1/4" = 1'-0"

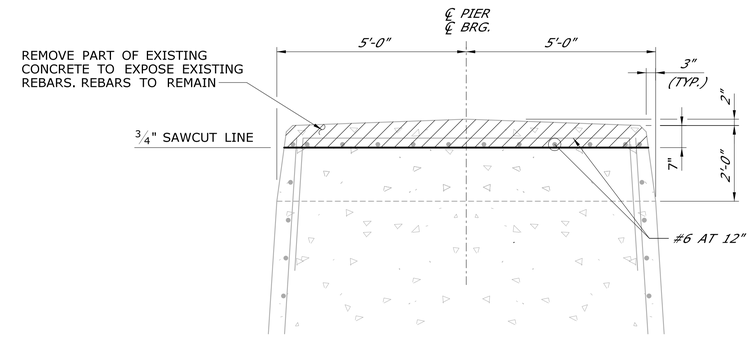

PIER DEMOLITION DETAIL
SCALE: 1/2" = 1'-0"

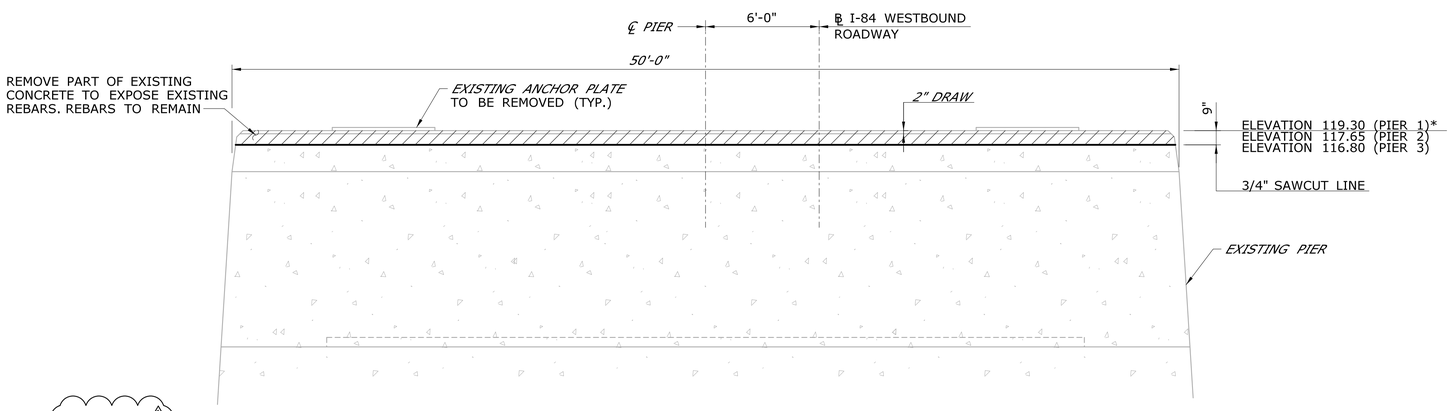

* ELEVATION CONVERTED TO NAVD 88 FROM AS-BUILT INFORMATION

ELEVATION
SCALE: 1/4" = 1'-0"

LEGEND

DEMOLITION AREA

REFERENCES

1. FOR GENERAL PLAN, SEE DWG. NO. S-02.
2. FOR GENERAL NOTES, SEE DWG. NO. S-03.
3. FOR PIER DETAILS, SEE DWG. NO. S-24 THROUGH NO. S-27.
4. DEMOLITION OF SUBSTRUCTURE TO BE PAID UNDER THE ITEM "REMOVAL OF EXISTING MASONRY".
5. EXISTING ANCHOR PLATE REMOVAL SHALL BE PAID UNDER THE ITEM "REMOVAL OF EXISTING MASONRY".
6. WHERE NEW CONCRETE COMES INTO CONTACT WITH EXISTING CONCRETE, BLAST CLEAN EXISTING CONCRETE SURFACE TO PARTIALLY EXPOSE AGGREGATE 1/4" MIN AND APPLY EPOXY BONDING COMPOUND TO THE EXISTING PIERS FOR ALL PIER MODIFICATIONS. COST TO BE INCLUDED IN GENERAL COST OF CONSTRUCTION.
7. PROVIDE A CONTAINMENT FOR THE PIER DEMOLITION AND BLAST CLEANING TO PREVENT DEBRIS FROM ENTERING THE RIVER.

ADDENDUM NO. 1

REV.	DATE	REVISION DESCRIPTION	SHEET NO.
1	1/16/2020	DETAILING REVISIONS	04.01.05.A1

THE INFORMATION, INCLUDING ESTIMATED QUANTITIES OF WORK, SHOWN ON THESE SHEETS IS BASED ON LIMITED INVESTIGATIONS BY THE STATE AND IS IN NO WAY WARRANTED TO INDICATE THE CONDITIONS OF ACTUAL QUANTITIES OF WORK WHICH WILL BE REQUIRED.

Plotted Date: 2/10/2020

DESIGNER/DRAFTER: GMP/MWQ
CHECKED BY: WSC
SCALE AS NOTED

STATE OF CONNECTICUT
DEPARTMENT OF TRANSPORTATION

Filename: ...\SB_MSTL_0096_0201_DEMO PIER-WB.dgn

SIGNATURE/BLOCK: STATE OF CONNECTICUT · THOMAS A. FARLEY · 001480 · LICENSED PROFESSIONAL ENGINEER

LOUIS BERGER US
A WSP COMPANY
55 CAPITAL BOULEVARD
ROCKY HILL, CT 06067

PROJECT TITLE:
REHABILITATION OF BRIDGE NO. 04180- I-84 WB OVER HOUSATONIC RIVER

TOWN: **NEWTOWN/SOUTHBURY**

DRAWING TITLE: **PIER DEMOLITION DETAILS**

PROJECT NO. **96-201**
DRAWING NO. **S-05**
SHEET NO. **04.01.05.A1**

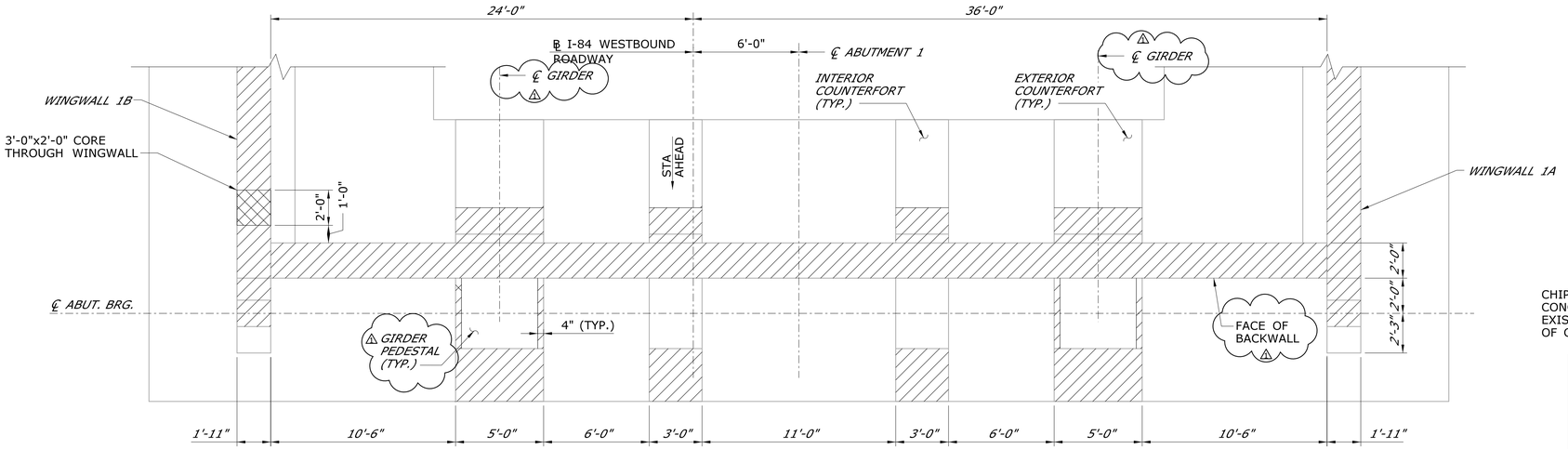

PLAN

SCALE: 1/4" = 1'-0"

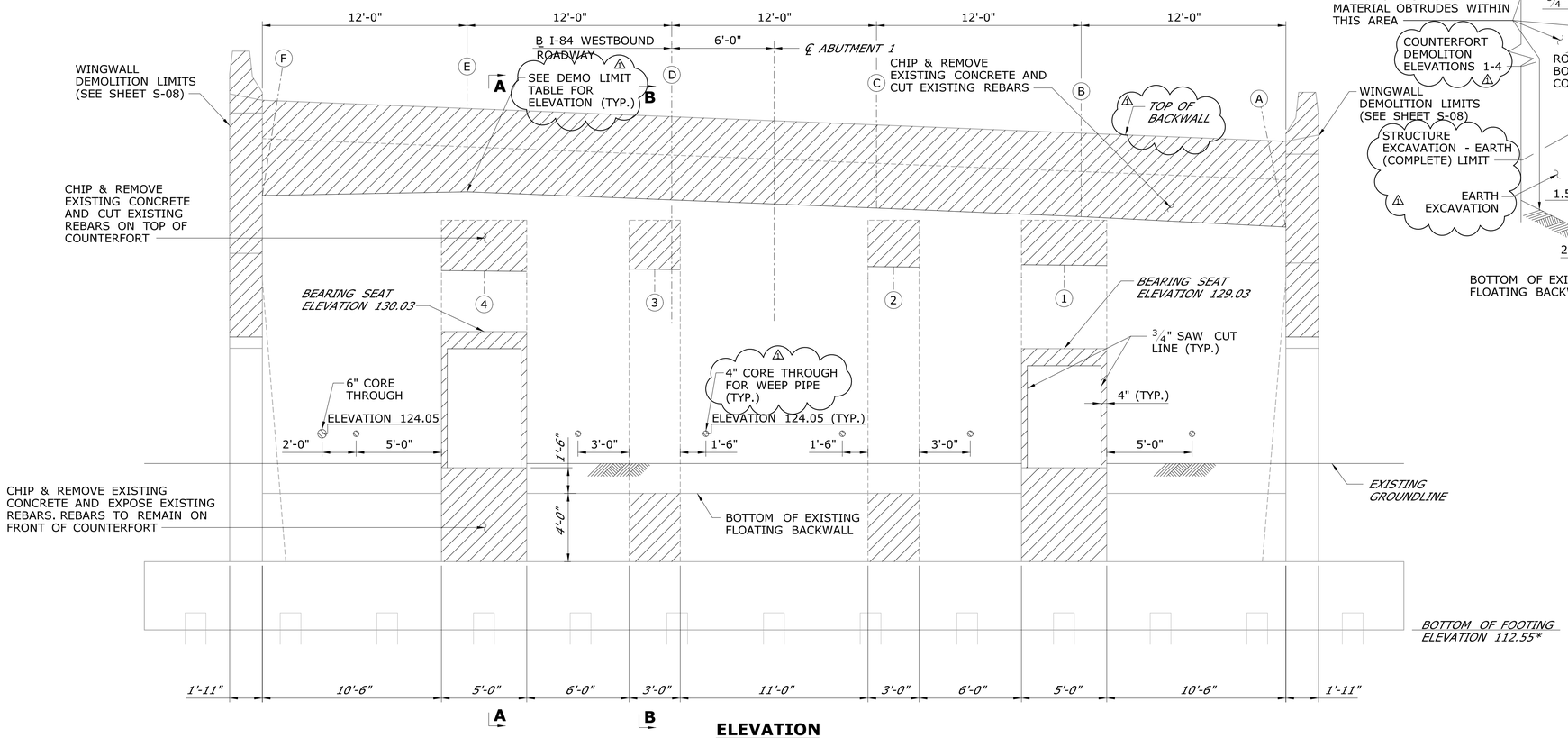

ELEVATION

SCALE: 1/4 = 1'-0"

* ELEVATION CONVERTED TO NAVD 88 FROM AS-BUILT INFORMATION

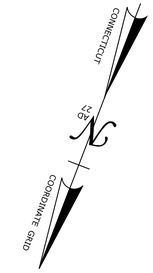

ABUTMENT DEMO LIMIT ELEVATIONS

	ABUTMENT 1
COUNTERFORT 1	134.08
COUNTERFORT 2	133.99
COUNTERFORT 3	133.85
COUNTERFORT 4	133.74
BACKWALL A	136.57
BACKWALL B	137.05
BACKWALL C	137.53
BACKWALL D	138.01
BACKWALL E	138.49
BACKWALL F	138.13

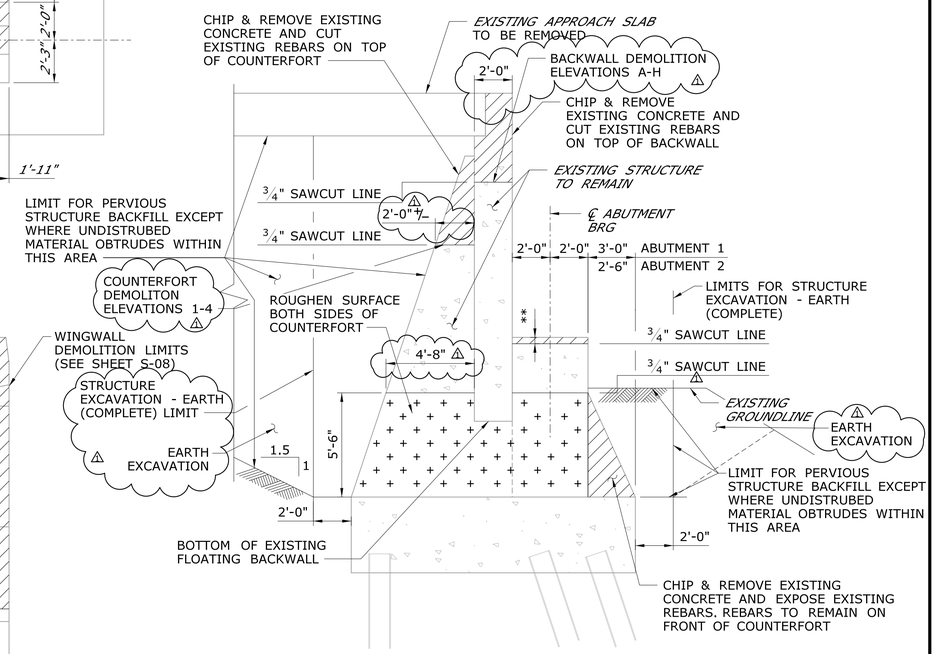

SECTION A-A

FOR EXTERIOR COUNTERFORT AREA ONLY

SCALE: 1/4 = 1'-0"

** 1'-0" ABUTMENT 1
4" ABUTMENT 2

LEGEND

DEMOLITION AREA

ROUGHEN SURFACE

REFERENCES

1. FOR GENERAL PLAN, SEE DWG. NO. S-02.
2. FOR GENERAL NOTES, SEE DWG. NO. S-03.
3. FOR ABUTMENT DETAILS, SEE DWG. NO. S-17 THROUGH NO. S-20.
4. FOR WINGWALL DEMOLITION LIMITS, SEE DWG. NO. S-08.
5. DEMOLITION OF EXISTING APPROACH SLAB SHALL BE PAID UNDER THE ITEM "REMOVAL OF EXISTING MASONRY".
6. WHERE NEW CONCRETE COMES INTO CONTACT WITH EXISTING CONCRETE, BLAST CLEAN EXISTING CONCRETE SURFACE TO PARTIALLY EXPOSE AGGREGATE 1/4" MIN AND APPLY EPOXY BONDING COMPOUND TO THE EXISTING WINGWALLS FOR ALL WINGWALL MODIFICATIONS. COST TO BE INCLUDED IN GENERAL COST OF CONSTRUCTION.
7. FOR SECTION B-B, SEE DWG. NO. S-07.

ADDENDUM NO. 1

REV.	DATE	REVISION DESCRIPTION	SHEET NO.
1	1/16/2020	DETAILING REVISIONS	04.01.06.A1

THE INFORMATION, INCLUDING ESTIMATED QUANTITIES OF WORK, SHOWN ON THESE SHEETS IS BASED ON LIMITED INVESTIGATIONS BY THE STATE AND IS IN NO WAY WARRANTED TO INDICATE THE CONDITIONS OF ACTUAL QUANTITIES OF WORK WHICH WILL BE REQUIRED.

Plotted Date: 2/14/2020

DESIGNER/DRAFTER: GMP/MWQ

CHECKED BY: WSC

SCALE AS NOTED

STATE OF CONNECTICUT
DEPARTMENT OF TRANSPORTATION

Filename: ...\SB_MSTL_0096_0201_DEMO ABUT 1-WB.dgn

SIGNATURE/BLOCK: STATE OF CONNECTICUT THOMAS A. HARLEY LICENSED PROFESSIONAL ENGINEER 0014890

LOUIS BERGER US
A WSP COMPANY
55 CAPITAL BOULEVARD
ROCKY HILL, CT 06067

PROJECT TITLE:

REHABILITATION OF BRIDGE NO. 04180- I-84 WB OVER HOUSATONIC RIVER

TOWN: **NEWTOWN/SOUTHBURY**

PROJECT NO. **96-201**

DRAWING TITLE: **ABUTMENT 1 DEMOLITION DETAILS**

DRAWING NO. **S-06**

SHEET NO. **04.01.06.A1**

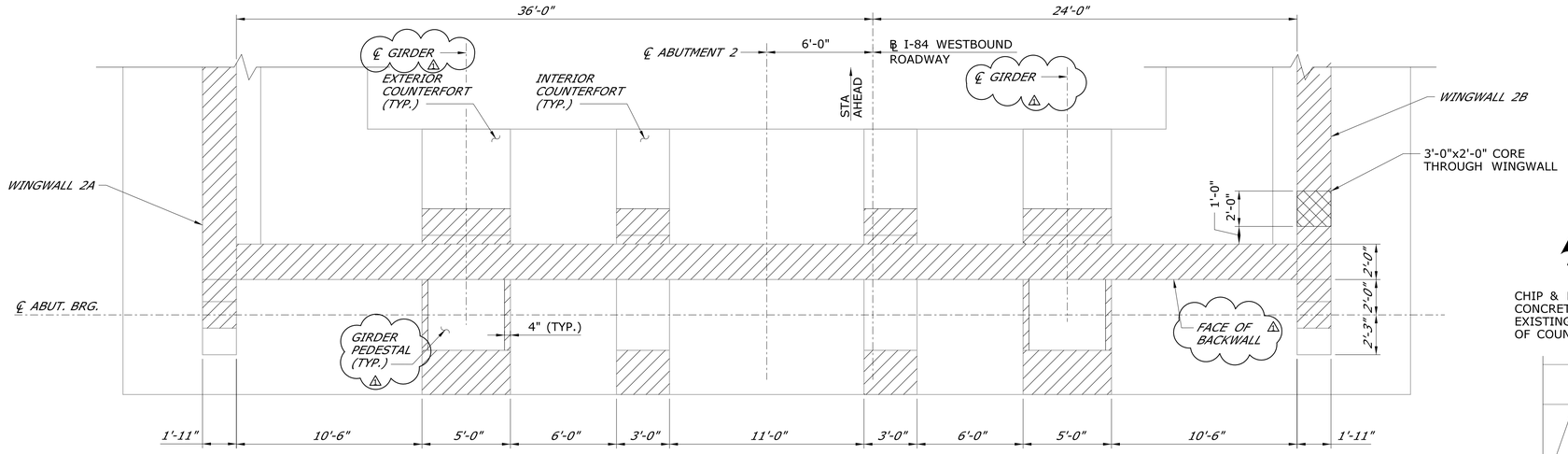

PLAN

SCALE: 1/4" = 1'-0"

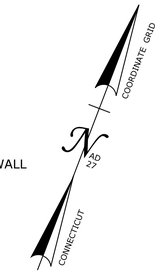

ABUTMENT DEMO LIMIT ELEVATIONS

	ABUTMENT 2
COUNTERFORT 1	129.03
COUNTERFORT 2	128.94
COUNTERFORT 3	128.80
COUNTERFORT 4	128.69
BACKWALL A	132.84
BACKWALL B	133.32
BACKWALL C	133.56
BACKWALL D	133.74
BACKWALL E	133.56
BACKWALL F	133.08

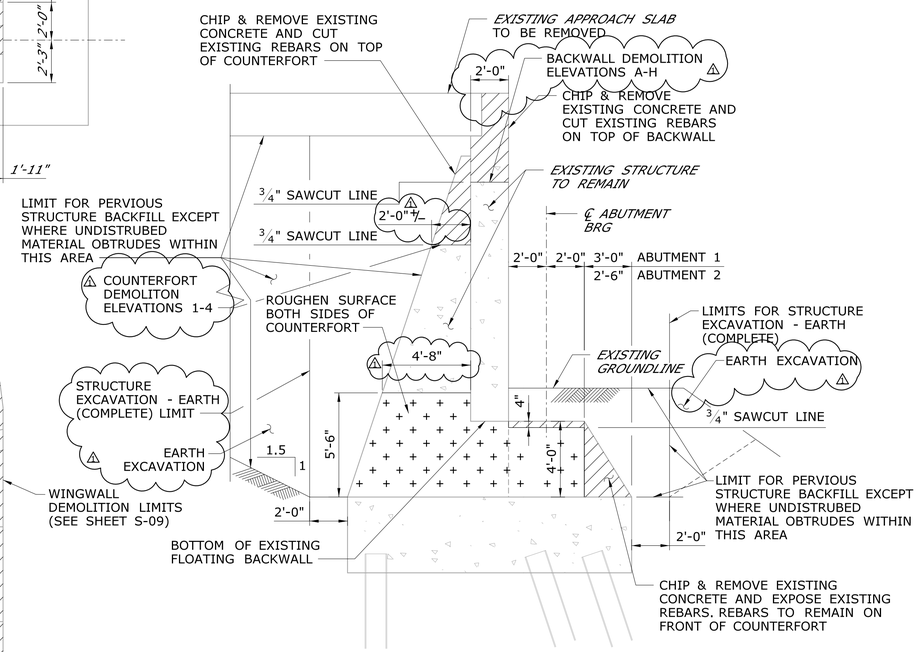

SECTION B-B

FOR INTERIOR COUNTERFORT AREA ONLY

SCALE: 1/4 = 1'-0"

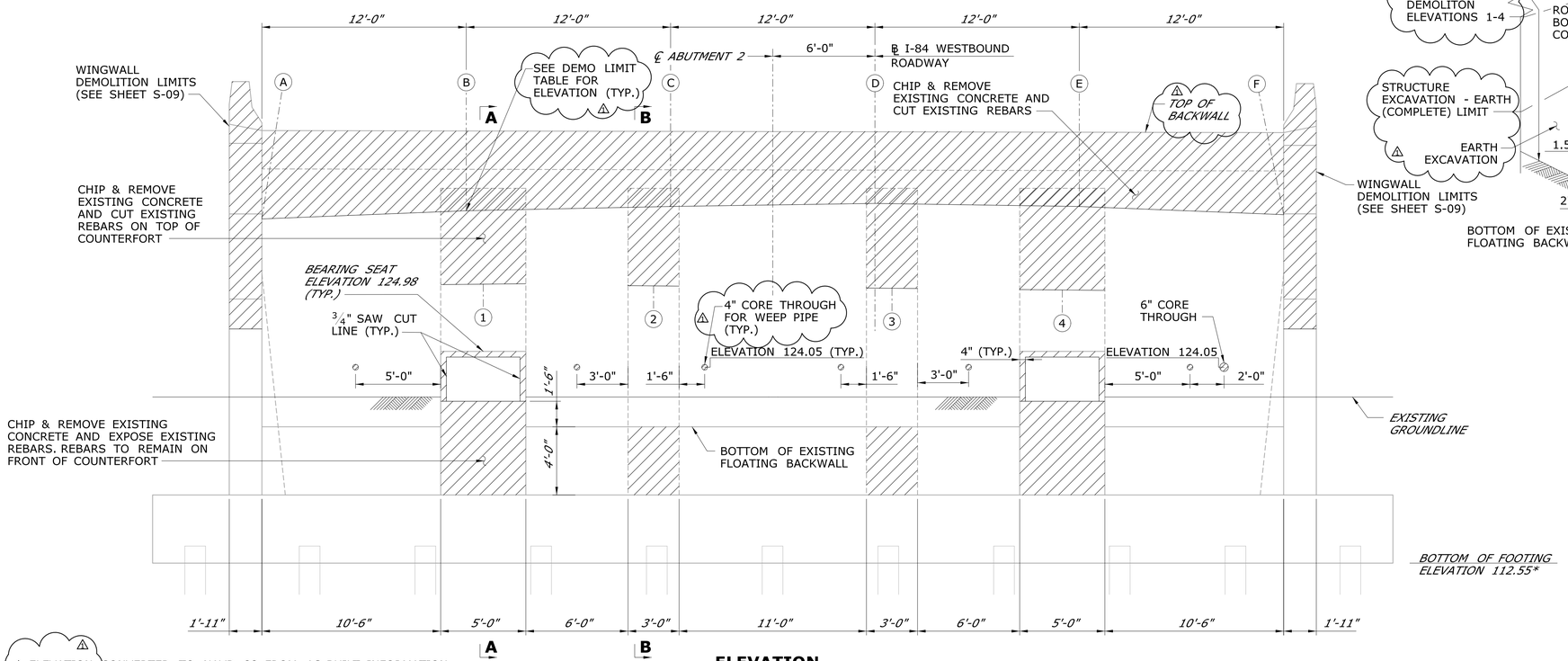

ELEVATION

SCALE: 1/4 = 1'-0"

* ELEVATION CONVERTED TO NAVD 88 FROM AS-BUILT INFORMATION

LEGEND

DEMOLITION AREA

ROUGHEN SURFACE

REFERENCES

1. FOR GENERAL PLAN, SEE DWG. NO. S-02.
2. FOR GENERAL NOTES, SEE DWG. NO. S-03.
3. FOR ABUTMENT DETAILS, SEE DWG. NO. S-17 THROUGH NO. S-20.
4. FOR WINGWALL DEMOLITION LIMITS, SEE DWG. NO. S-09.
5. DEMOLITION OF EXISTING APPROACH SLAB SHALL BE PAID UNDER THE ITEM "REMOVAL OF EXISTING MASONRY".
6. WHERE NEW CONCRETE COMES INTO CONTACT WITH EXISTING CONCRETE, BLAST CLEAN EXISTING CONCRETE SURFACE TO PARTIALLY EXPOSE AGGREGATE 1/4" MIN AND APPLY EPOXY BONDING COMPOUND TO THE EXISTING WINGWALLS FOR ALL WINGWALL MODIFICATIONS. COST TO BE INCLUDED IN GENERAL COST OF CONSTRUCTION.
7. FOR SECTION A-A, SEE DWG. NO. S-06.

ADDENDUM NO. 1

REV.	DATE	REVISION DESCRIPTION	SHEET NO.
1	1/16/2020	DETAILING REVISIONS	04.01.07.A1

THE INFORMATION, INCLUDING ESTIMATED QUANTITIES OF WORK, SHOWN ON THESE SHEETS IS BASED ON LIMITED INVESTIGATIONS BY THE STATE AND IS IN NO WAY WARRANTED TO INDICATE THE CONDITIONS OF ACTUAL QUANTITIES OF WORK WHICH WILL BE REQUIRED.

Plotted Date: 2/14/2020

DESIGNER/DRAFTER: GMP/MWQ

CHECKED BY: WSC

SCALE AS NOTED

STATE OF CONNECTICUT
DEPARTMENT OF TRANSPORTATION

Filename: ...\SB_MSTL_0096_0201_DEMO_ABUT_2-WB.dgn

SIGNATURE/BLOCK: STATE OF CONNECTICUT THOMAS A. HARLEY LICENSED PROFESSIONAL ENGINEER 0014890

LOUIS BERGER US
A WSP COMPANY
55 CAPITAL BOULEVARD
ROCKY HILL, CT 06067

PROJECT TITLE:

REHABILITATION OF BRIDGE NO. 04180- I-84 WB OVER HOUSATONIC RIVER

TOWN: **NEWTOWN/SOUTHBURY**

DRAWING TITLE: **ABUTMENT 2 DEMOLITION DETAILS**

PROJECT NO. **96-201**

DRAWING NO. **S-07**

SHEET NO. **04.01.07.A1**

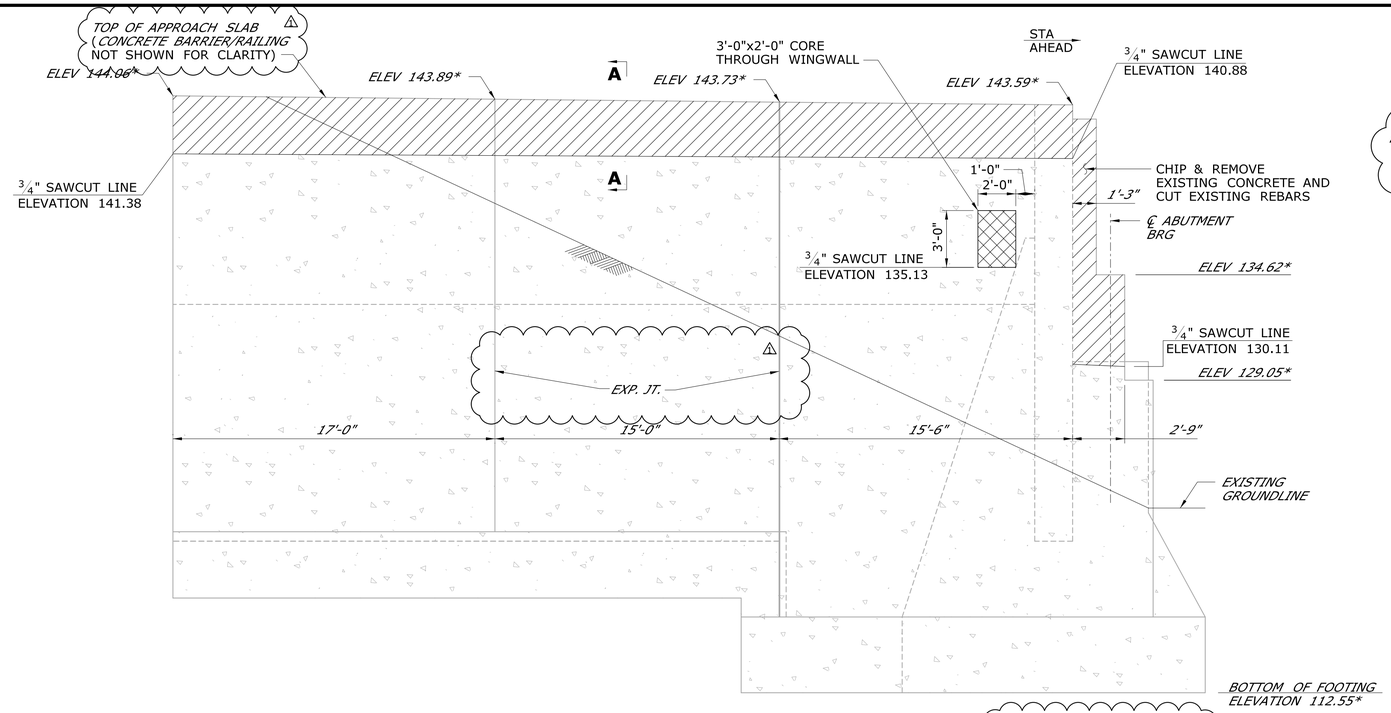

ELEVATION - WINGWALL 1B

SCALE: 1/4 = 1'-0"

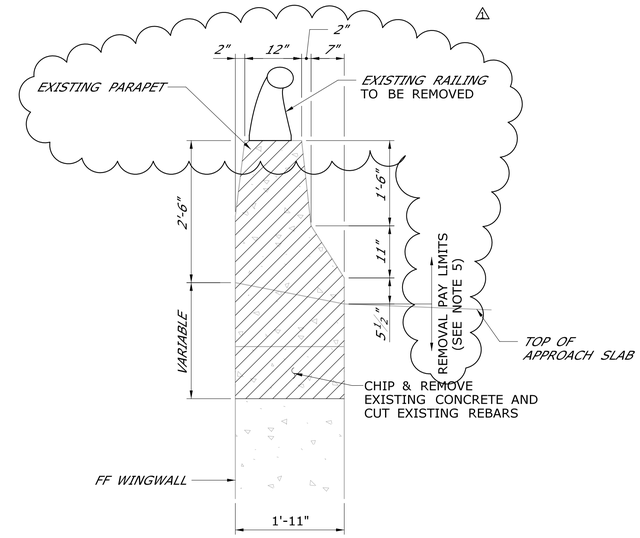

SECTION A-A

SCALE: 3/4 = 1'-0"

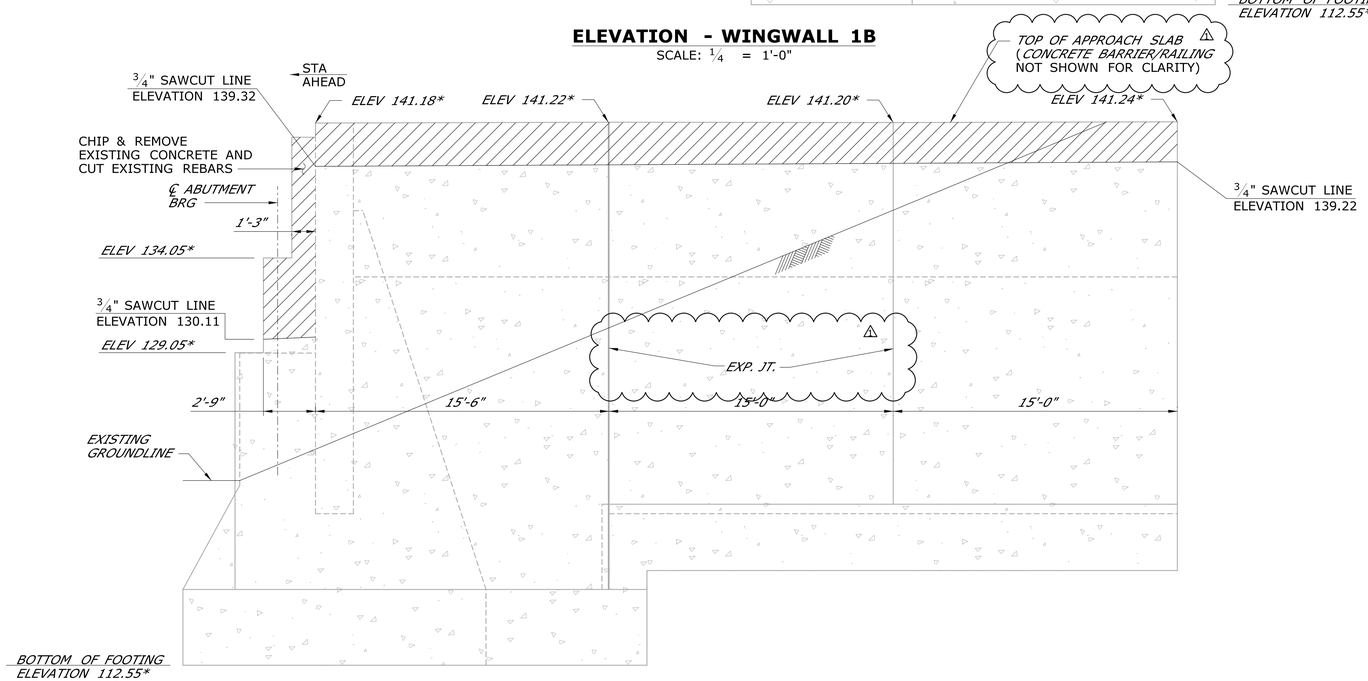

ELEVATION - WINGWALL 1A

SCALE: 1/4 = 1'-0"

* ELEVATION CONVERTED TO NAVD 88 FROM AS-BUILT INFORMATION

LEGEND

DEMOLITION AREA

REFERENCES

1. FOR GENERAL PLAN, SEE DWG. NO. S-02.
2. FOR GENERAL NOTES, SEE DWG. NO. S-03.
3. FOR ABUTMENT DETAILS, SEE DWG. NO. S-17 THROUGH NO. S-20.
4. FOR ABUTMENT DEMOLITION LIMITS, SEE DWG. NO. S-06.
5. DEMOLITION OF WINGWALL SHALL BE PAID UNDER THE ITEM "REMOVAL OF EXISTING MASONRY". REMOVAL OF EXISTING RAILING INCLUDING PARAPET SHALL BE PAID UNDER "REMOVAL OF SUPERSTRUCTURE".
6. WHERE NEW CONCRETE COMES INTO CONTACT WITH EXISTING CONCRETE, BLAST CLEAN EXISTING CONCRETE SURFACE TO PARTIALLY EXPOSE AGGREGATE 1/4" MIN AND APPLY EPOXY BONDING COMPOUND TO THE EXISTING WINGWALLS FOR ALL WINGWALL MODIFICATIONS.

ADDENDUM NO. 1

REV.	DATE	REVISION DESCRIPTION	SHEET NO.
1	1/16/2020	DETAILING REVISIONS	04.01.08.A1

THE INFORMATION, INCLUDING ESTIMATED QUANTITIES OF WORK, SHOWN ON THESE SHEETS IS BASED ON LIMITED INVESTIGATIONS BY THE STATE AND IS IN NO WAY WARRANTED TO INDICATE THE CONDITIONS OF ACTUAL QUANTITIES OF WORK WHICH WILL BE REQUIRED.

Plotted Date: 2/14/2020

DESIGNER/DRAFTER: GMP/MWQ

CHECKED BY: WSC

SCALE AS NOTED

STATE OF CONNECTICUT
DEPARTMENT OF TRANSPORTATION

Filename: ...\SB_MSTL_0096_0201_DEMO WINGWALL 1-WB.dgn

SIGNATURE/BLOCK: STATE OF CONNECTICUT THOMAS A. FARRELL 001480 LICENSED PROFESSIONAL ENGINEER

LOUIS BERGER US
A WSP COMPANY
55 CAPITAL BOULEVARD
ROCKY HILL, CT 06067

PROJECT TITLE:
REHABILITATION OF BRIDGE NO. 04180- I-84 WB OVER HOUSATONIC RIVER

TOWN: **NEWTOWN/SOUTHBURY**

DRAWING TITLE: **ABUTMENT 1 WINGWALL DEMOLITION**

PROJECT NO. **96-201**

DRAWING NO. **S-08**

SHEET NO. **04.01.08.A1**

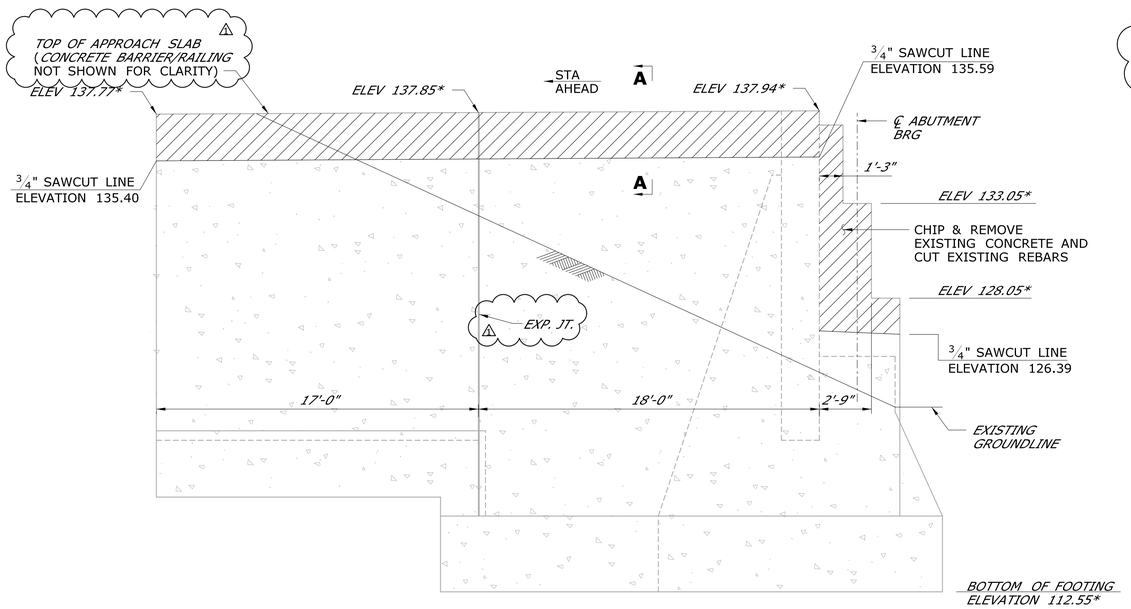

ELEVATION - WINGWALL 2A

SCALE: 1/4 = 1'-0"

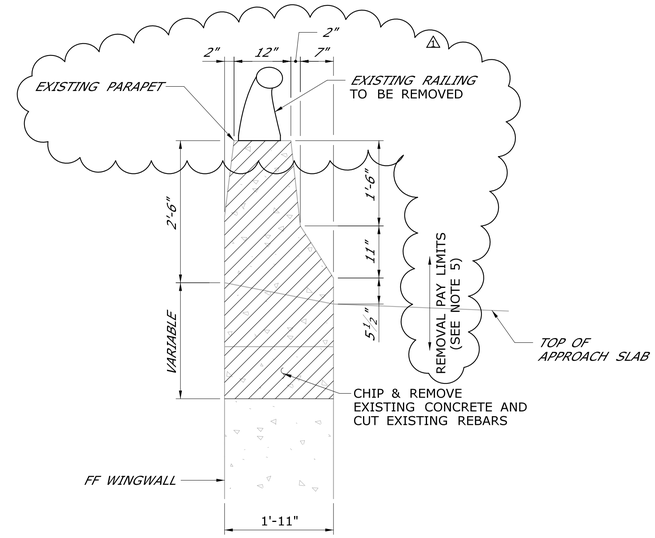

SECTION A-A

SCALE: 3/4 = 1'-0"

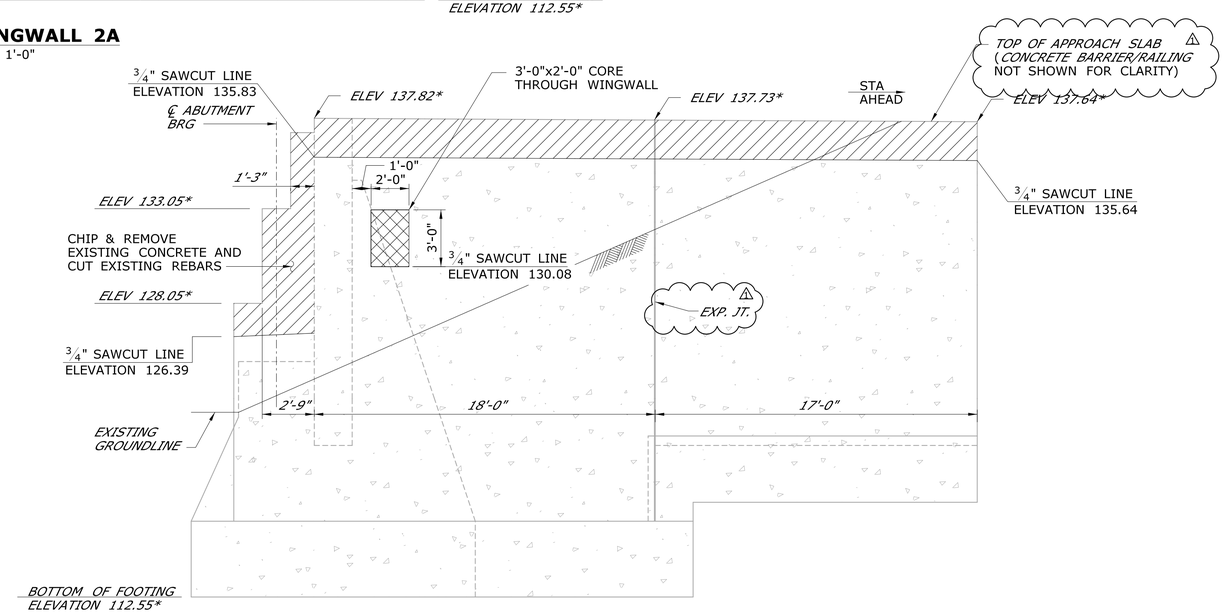

* ELEVATION CONVERTED TO NAVD 88 FROM AS-BUILT INFORMATION

ELEVATION - WINGWALL 2B

SCALE: 1/4 = 1'-0"

LEGEND

DEMOLITION AREA

REFERENCES

1. FOR GENERAL PLAN, SEE DWG. NO. S-02.
2. FOR GENERAL NOTES, SEE DWG. NO. S-03.
3. FOR ABUTMENT DETAILS, SEE DWG. NO. S-17 THROUGH NO. S-20.
4. FOR ABUTMENT DEMOLITION LIMITS, SEE DWG. NO. S-07.
5. DEMOLITION OF WINGWALL SHALL BE PAID UNDER THE ITEM "REMOVAL OF EXISTING MASONRY". REMOVAL OF EXISTING RAILING INCLUDING PAPARET SHALL BE PAID UNDER "REMOVAL OF SUPERSTRUCTURE".
6. WHERE NEW CONCRETE COMES INTO CONTACT WITH EXISTING CONCRETE, BLAST CLEAN EXISTING CONCRETE SURFACE TO PARTIALLY EXPOSE AGGREGATE 1/4" MIN AND APPLY EPOXY BONDING COMPOUND TO THE EXISTING WINGWALLS FOR ALL WINGWALL MODIFICATIONS.

ADDENDUM NO. 1

REV.	DATE	REVISION DESCRIPTION	SHEET NO.
1	1/16/2020	DETAILING REVISIONS	04.01.09.A1

THE INFORMATION, INCLUDING ESTIMATED QUANTITIES OF WORK, SHOWN ON THESE SHEETS IS BASED ON LIMITED INVESTIGATIONS BY THE STATE AND IS IN NO WAY WARRANTED TO INDICATE THE CONDITIONS OF ACTUAL QUANTITIES OF WORK WHICH WILL BE REQUIRED.

Plotted Date: 2/14/2020

DESIGNER/DRAFTER: **GMP/MWQ**

CHECKED BY: **WSC**

SCALE AS NOTED

STATE OF CONNECTICUT
DEPARTMENT OF TRANSPORTATION

Filename: ...\SB_MSTL_0096_0201_DEMO WINGWALL 2-WB.dgn

SIGNATURE/BLOCK: STATE OF CONNECTICUT THOMAS A. FARLEY 001480 LICENSED PROFESSIONAL ENGINEER

LOUIS BERGER US
A WSP COMPANY
55 CAPITAL BOULEVARD
ROCKY HILL, CT 06067

PROJECT TITLE:
REHABILITATION OF BRIDGE NO. 04180- I-84 WB OVER HOUSATONIC RIVER

TOWN: **NEWTOWN/SOUTHBURY**

DRAWING TITLE: **ABUTMENT 2 WINGWALL DEMOLITION**

PROJECT NO. **96-201**

DRAWING NO. **S-09**

SHEET NO. **04.01.09.A1**

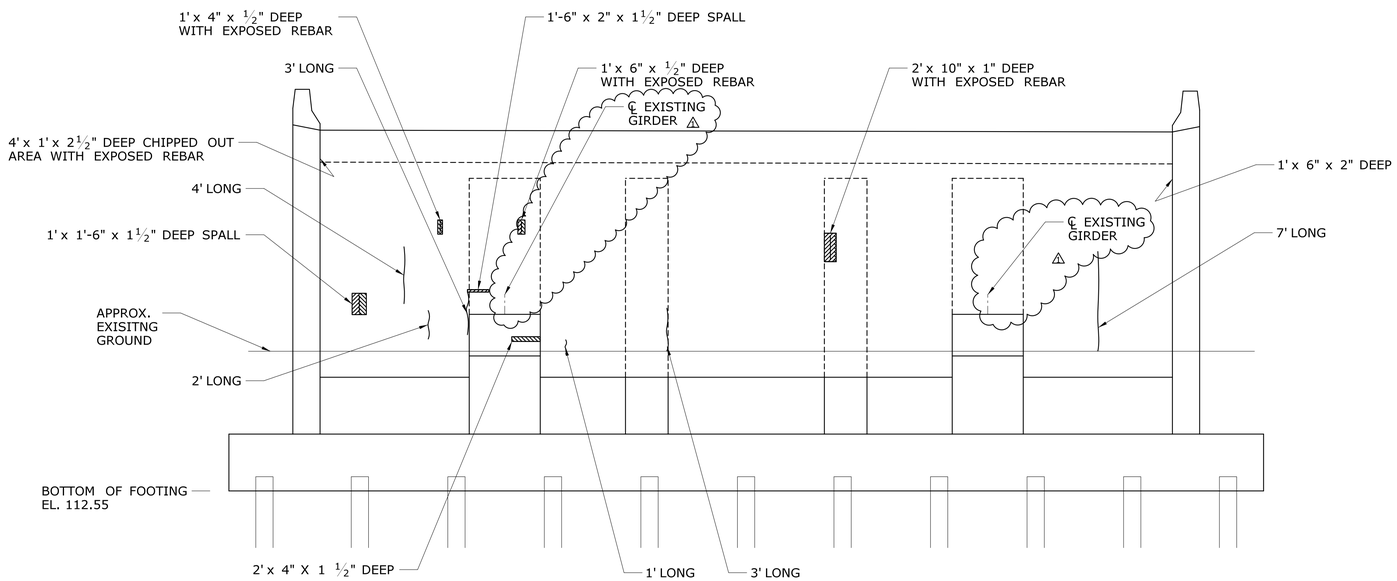

ABUTMENT 2
SCALE: N.T.S

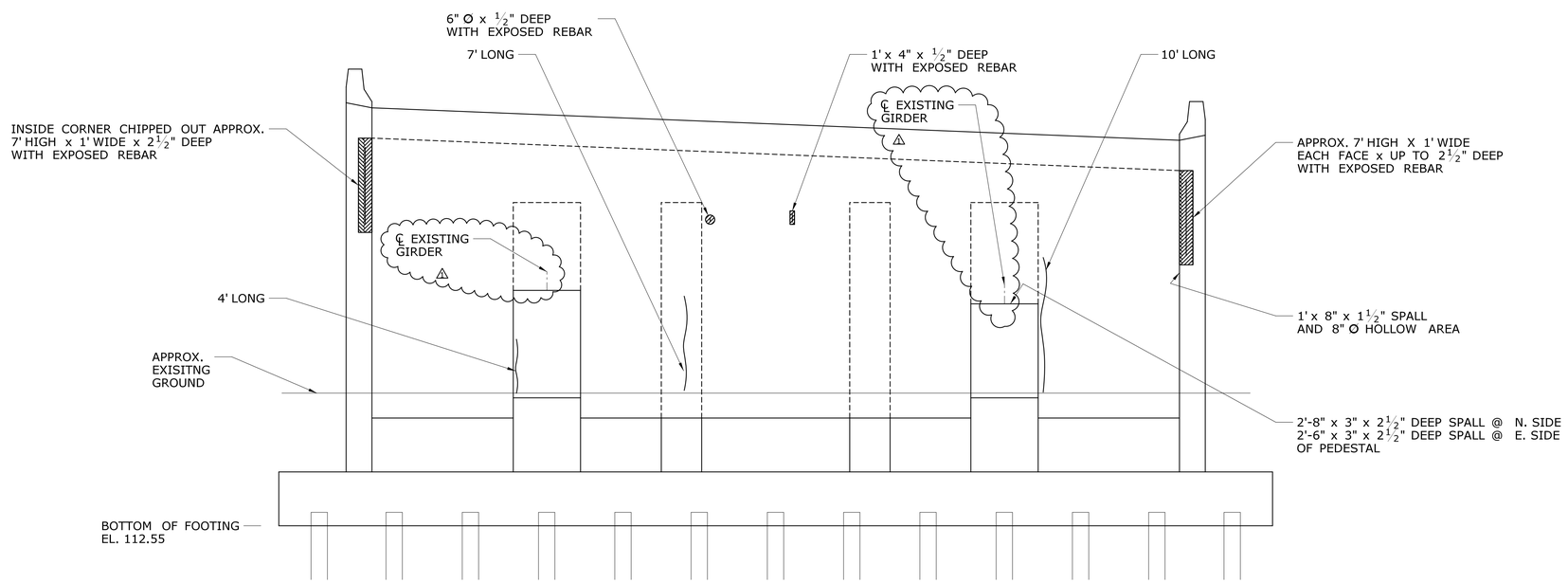

ABUTMENT 1
SCALE: N.T.S

NOTES:

1. FOR CONCRETE REPAIR DETAILS, SEE DWG S-14 THRU DWG S-16.

2. ALL CONCRETE REPAIR SURFACES SHALL RECEIVE A PENETRATING SEALER PROTECTIVE COMPOUND AFTER COMPLETION OF PROPOSED WORK. WORK SHALL BE PAID UNDER ITEM NO. 0819002 "PENETRATING SEALER PROTECTIVE COMPOUND."

3. EXISTING CONCRETE SURFACE TO REMAIN SHALL BE CLEANED OF DEBRIS AND GRAFFITI PRIOR TO APPLICATION OF CONCRETE SURFACE SEALER. COST OF CONCRETE SURFACE CLEANING SHALL BE INCLUDED IN THE COSTS OF PENETRATING SEALER PROTECTIVE COMPOUND. COST OF GRAFFITI REMOVAL SHALL BE INCLUDED ITEM NO. 0601897A "GRAFFITI REMOVAL." △1

4. CONTRACTOR IS HEREBY NOTIFIED THAT SOME REPAIR AREAS IDENTIFIED ARE WITHIN THE PROPOSED LIMITS OF DEMOLITION FOR OTHER WORK. AREAS WITHIN DEMOLITION LIMITS SHALL BE INCLUDED WITH THE DEMOLITION AND PROPOSED CONCRETE ITEMS.

LEGEND:

- SCALE
- SPALL/HOLLOW AREA
- SPALL WITH EXPOSED REBAR
- HAIRLINE CRACK
- MAPCRACKING

ADDENDUM NO. 1

REV.	DATE	REVISION DESCRIPTION	SHEET NO.
△1	12/06/2019	ADD CENTERLINE OF EXISTING GIRDERS	04.01.10.A1

THE INFORMATION, INCLUDING ESTIMATED QUANTITIES OF WORK, SHOWN ON THESE SHEETS IS BASED ON LIMITED INVESTIGATIONS BY THE STATE AND IS IN NO WAY WARRANTED TO INDICATE THE CONDITIONS OF ACTUAL QUANTITIES OF WORK WHICH WILL BE REQUIRED.

Plotted Date: 1/9/2020

DESIGNER/DRAFTER: JPM
CHECKED BY: JS
SCALE AS NOTED

STATE OF CONNECTICUT
DEPARTMENT OF TRANSPORTATION

Filename: ...\SB_MSTL_0096_0201_CONCRETE DETERIORATIONS ABUTMENTS WB.dgn

SIGNATURE/BLOCK: STATE OF CONNECTICUT THOMAS A. TARLEY 001480 LICENSED PROFESSIONAL ENGINEER

LOUIS BERGER US
A WSP COMPANY
55 CAPITAL BOULEVARD
ROCKY HILL, CT 06067

PROJECT TITLE:
REHABILITATION OF BRIDGE NO 04180 - I-84 WB OVER HOUSATONIC RIVER

TOWN: **NEWTOWN/SOUTHBURY**

DRAWING TITLE: **CONC. DETERIORATIONS ABUTMENTS**

PROJECT NO. **96-201**
DRAWING NO. **S-10**
SHEET NO. **04.01.10.A1**

NOTES:

1. ~~FOR CONCRETE DETERIORATION NOTES~~ FOR SUBSTRUCTURE REPAIR NOTES, △1 SEE DWG S-14.

2. FOR CONRETE REPAIR DETAILS, SEE DWG S-14 THRU S-16.

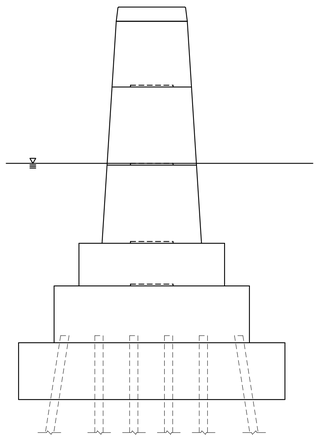

WEST ELEVATION
SCALE: 3/32" = 1'-0"

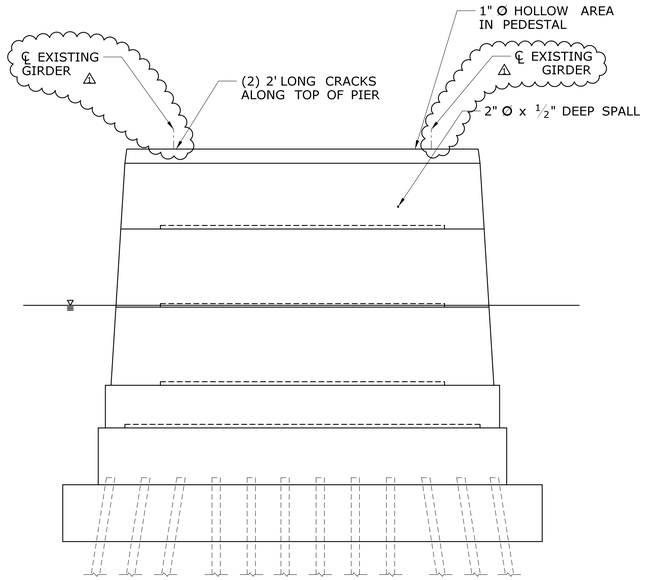

NORTH ELEVATION
SCALE: 3/32" = 1'-0"

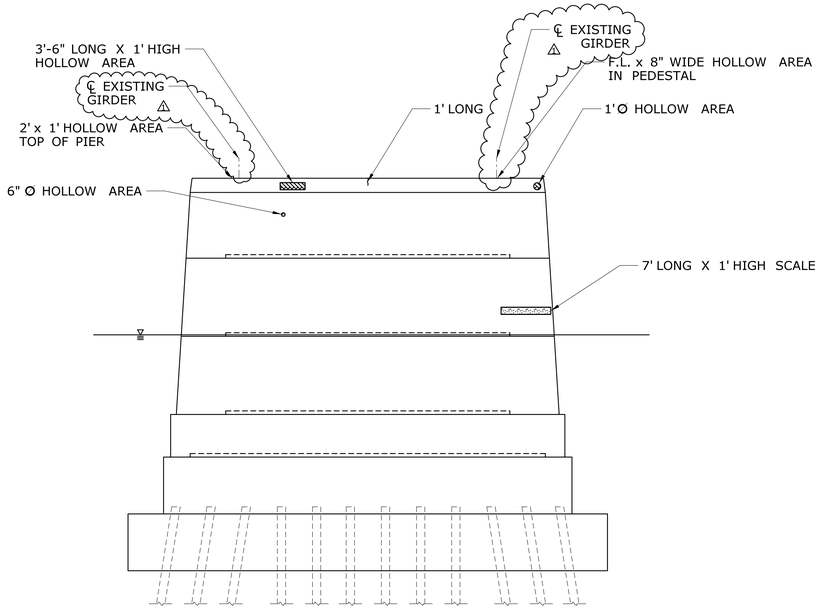

SOUTH ELEVATION
SCALE: 3/32" = 1'-0"

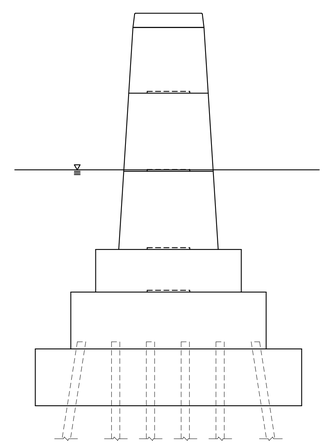

EAST ELEVATION
SCALE: 3/32" = 1'-0"

LEGEND:

- SCALE
- SPALL/HOLLOW AREA
- SPALL WITH EXPOSED REBAR
- HAIRLINE CRACK
- △1 HAIRLINE MAPCRACKING
- O.H.W = EL. 100.3

ADDENDUM NO. 1

REV.	DATE	REVISION DESCRIPTION	SHEET NO.
△1	12/06/2019	ADD CENTERLINE OF EXISTING GIRDERS AND REVISE NOTE	04.01.11.A1

THE INFORMATION, INCLUDING ESTIMATED QUANTITIES OF WORK, SHOWN ON THESE SHEETS IS BASED ON LIMITED INVESTIGATIONS BY THE STATE AND IS IN NO WAY WARRANTED TO INDICATE THE CONDITIONS OF ACTUAL QUANTITIES OF WORK WHICH WILL BE REQUIRED.

Plotted Date: 1/9/2020

DESIGNER/DRAFTER: JPM
CHECKED BY: JS
SCALE AS NOTED

STATE OF CONNECTICUT
DEPARTMENT OF TRANSPORTATION

Filename: ...\SB_MSTL_0096_0201_CONCRETE DETERIORATIONS PIER 1 WB.dgn

SIGNATURE/BLOCK: STATE OF CONNECTICUT THOMAS A. HARRIGAN 0014890 LICENSED PROFESSIONAL ENGINEER

LOUIS BERGER US
A WSP COMPANY
55 CAPITAL BOULEVARD
ROCKY HILL, CT 06067

PROJECT TITLE:
REHABILITATION OF BRIDGE NO 04180 - I-84 WB OVER HOUSATONIC RIVER

TOWN: **NEWTOWN/SOUTHBURY**

DRAWING TITLE: **CONC. DETERIORATIONS PIER 1**

PROJECT NO. **96-201**
DRAWING NO. **S-11**
SHEET NO. **04.01.11.A1**

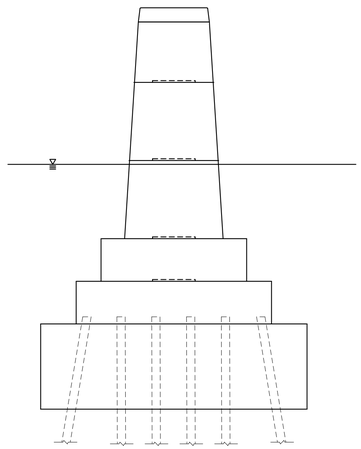

WEST ELEVATION
SCALE: 3/32" = 1'-0"

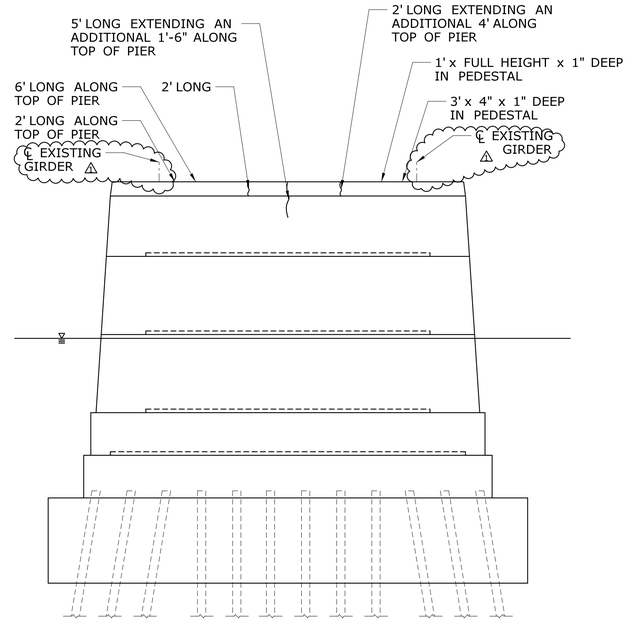

NORTH ELEVATION
SCALE: 3/32" = 1'-0"

NOTES:

1. ~~FOR CONCRETE DETERIORATION NOTES~~ FOR SUBSTRUCTURE REPAIR 1 NOTES, SEE DWG S-14.

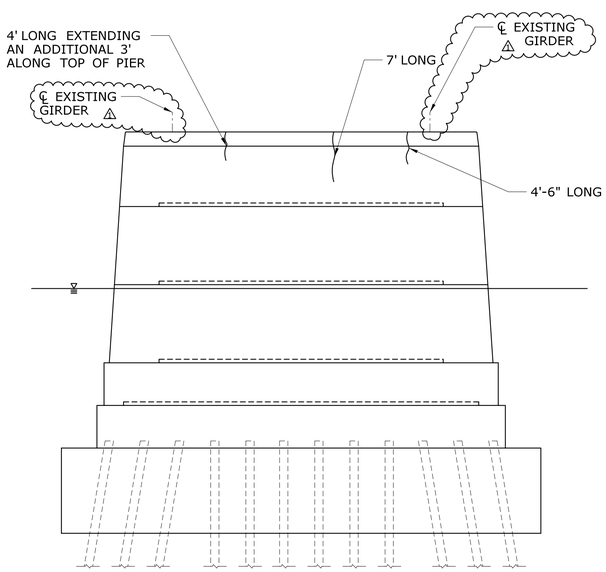

SOUTH ELEVATION
SCALE: 3/32" = 1'-0"

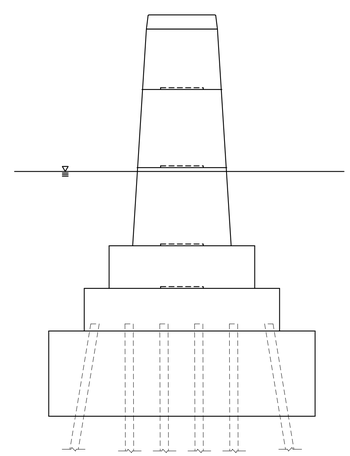

EAST ELEVATION
SCALE: 3/32" = 1'-0"

LEGEND:

- SCALE
- SPALL/HOLLOW AREA
- SPALL WITH EXPOSED REBAR
- HAIRLINE CRACK
- MAPCRACKING
- O.H.W = EL. 100.3

ADDENDUM NO. 1

REV.	DATE	REVISION DESCRIPTION	SHEET NO.
1	12/06/2019	ADD CENTERLINE OF EXISTING GIRDERS AND REVISE NOTE	04.01.12.A1

THE INFORMATION, INCLUDING ESTIMATED QUANTITIES OF WORK, SHOWN ON THESE SHEETS IS BASED ON LIMITED INVESTIGATIONS BY THE STATE AND IS IN NO WAY WARRANTED TO INDICATE THE CONDITIONS OF ACTUAL QUANTITIES OF WORK WHICH WILL BE REQUIRED.

Plotted Date: 1/9/2020

DESIGNER/DRAFTER: JPM
CHECKED BY: JS
SCALE AS NOTED

STATE OF CONNECTICUT
DEPARTMENT OF TRANSPORTATION

Filename: ...\SB_MSTL_0096_0201_CONCRETE DETERIORATIONS PIER 2 WB.dgn

SIGNATURE/BLOCK:
STATE OF CONNECTICUT THOMAS A. FARLEY 001480 LICENSED PROFESSIONAL ENGINEER

LOUIS BERGER US
A WSP COMPANY
55 CAPITAL BOULEVARD
ROCKY HILL, CT 06067

PROJECT TITLE:
REHABILITATION OF BRIDGE NO 04180 - I-84 WB OVER HOUSATONIC RIVER

TOWN: **NEWTOWN/SOUTHBURY**

DRAWING TITLE: **CONC. DETERIORATIONS PIER 2**

PROJECT NO. **96-201**
DRAWING NO. **S-12**
SHEET NO. **04.01.12.A1**

NOTES:

1. ~~FOR CONCRETE DETERIORATION~~ FOR SUBSTRUCTURE REPAIR △1 NOTES, SEE DWG S-14.

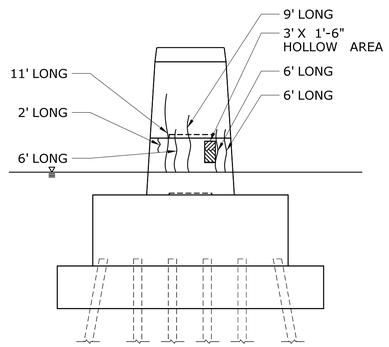

WEST ELEVATION
SCALE: N.T.S

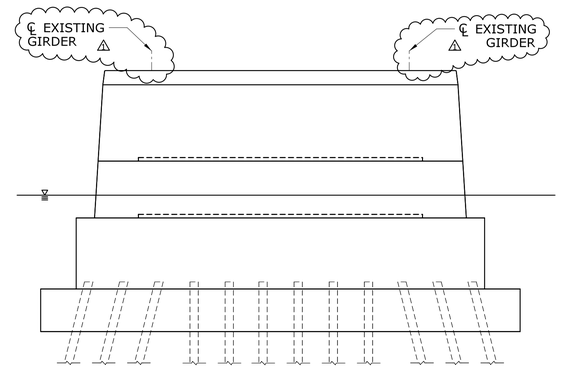

NORTH ELEVATION
SCALE: N.T.S

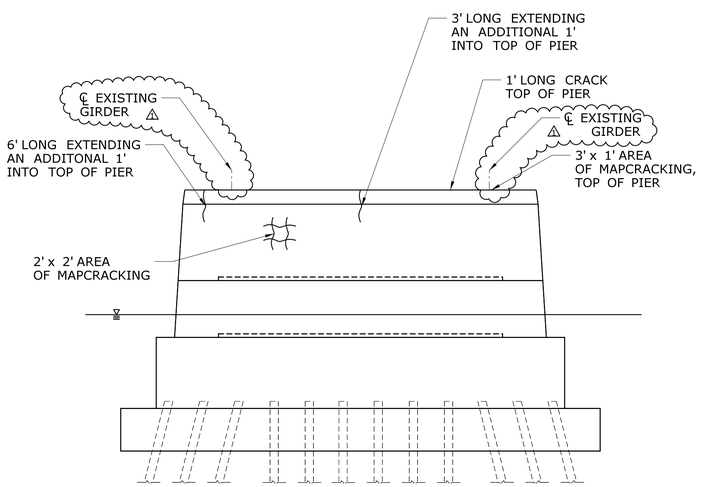

SOUTH ELEVATION
SCALE: N.T.S

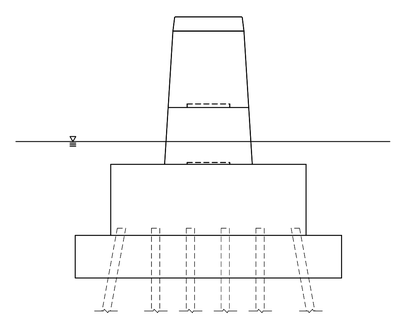

EAST ELEVATION
SCALE: N.T.S

LEGEND:

- SCALE
- SPALL/HOLLOW AREA
- SPALL WITH EXPOSED REBAR
- HAIRLINE CRACK
- MAPCRACKING
- O.H.W = EL. 100.3

ADDENDUM NO. 1

REV.	DATE	REVISION DESCRIPTION	SHEET NO.
△1	12/06/2019	ADD CENTERLINE OF EXISTING GIRDERS AND REVISE NOTE	04.01.13.A1

THE INFORMATION, INCLUDING ESTIMATED QUANTITIES OF WORK, SHOWN ON THESE SHEETS IS BASED ON LIMITED INVESTIGATIONS BY THE STATE AND IS IN NO WAY WARRANTED TO INDICATE THE CONDITIONS OF ACTUAL QUANTITIES OF WORK WHICH WILL BE REQUIRED.

Plotted Date: 1/17/2020

DESIGNER/DRAFTER: JPM
CHECKED BY: JS
SCALE AS NOTED

STATE OF CONNECTICUT
DEPARTMENT OF TRANSPORTATION

Filename: ...\SB_MSTL_0096_0201_CONCRETE DETERIORATIONS PIER 3 WB.dgn

SIGNATURE/BLOCK:
STATE OF CONNECTICUT THOMAS A. FARLEY 001480 LICENSED PROFESSIONAL ENGINEER

LOUIS BERGER US
A WSP COMPANY
55 CAPITAL BOULEVARD
ROCKY HILL, CT 06067

PROJECT TITLE:
REHABILITATION OF BRIDGE NO 04180 - I-84 WB OVER HOUSATONIC RIVER

TOWN: **NEWTOWN/SOUTHBURY**

DRAWING TITLE: **CONC. DETERIORATIONS PIER 3**

PROJECT NO. **96-201**
DRAWING NO. **S-13**
SHEET NO. **04.01.13.A1**

SUBSTRUCTURE REPAIR NOTES

1. THE SUBSTRUCTURE DETERIORATION LOCATION, EXTENT AND REPAIR DIMENSIONS SHOWN ON THE ~~PLANS ARE APPROXIMATE~~ AND ARE BASED ON LIMITED FIELD OBSERVATIONS PERFORMED BY LB IN 2018 AND BRIDGE SAFETY INSPECTION REPORTS. THE ~~INFORMATION IS INTENDED~~ TO BE USED AS A GUIDE AND DOES NOT NECESSARILY REFLECT THE CURRENT CONDITION OF THE STRUCTURE. THE EXACT LOCATION AND LIMITS OF DETERIORATED CONCRETE TO BE REPAIRED SHALL BE DETERMINED BY THE ENGINEER DURING CONSTRUCTION.

2. THE CONTRACTOR SHALL PROVIDE SAFE ACCESS TO THE ABUTMENT AND PIERS FOR THE ENGINEER TO DELINEATE AND REVIEW THE REPAIR WORK. THE COST OF PROVIDING ACCESS SHALL BE INCLUDED IN THE COST OF APPROPRIATE REPAIR ITEMS.

3. THE CONTRACTOR SHALL NOT PERFORM ANY REPAIR WORK WITHOUT PRIOR APPROVAL FROM THE ENGINEER.

4. ~~IF~~ IN AREAS DESIGNATED FOR REPAIR WITH EXPOSED ~~THE~~ REINFORCING STEEL ~~HAS NOT BEEN EXPOSED~~, THE CONCRETE SHALL BE FURTHER REMOVED TO A DEPTH OF AT LEAST 1" BEHIND THE REINFORCING STEEL. △1

5. IF, DURING REMOVAL OF THE DETERIORATED CONCRETE, THE CONTRACTOR DAMAGES EXISTING REINFORCEMENT TO THE EXTENT REQUIRING REPLACEMENT, ANY ADDITIONAL CONCRETE REMOVAL AND REPLACEMENT WITH PATCHING MATERIAL SHALL BE AT THE CONTRACTOR'S EXPENSE.

6. THE CONTRACTOR SHALL NOT REMOVE CONCRETE EXCEPT IN THE PRESENCE OF THE ENGINEER OR HIS APPOINTED REPRESENTATIVE. IF THE AREA REMOVED EXCEEDS 20 SQUARE FEET, OR IF THE REMOVAL DEPTH EXCEEDS MORE THAN 1½" BEHIND THE MAIN REINFORCING BARS, THE CONTRACTOR SHALL CEASE REMOVAL OPERATION AND NOTIFY THE ENGINEER IMMEDIATELY. THE ENGINEER SHALL DETERMINE IF THE REMOVAL OPERATION REDUCES THE STRUCTURAL CAPACITY OF THE ELEMENT.

7. NEW CONCRETE PATCHES SHALL MATCH SHAPE OF EXISTING CONCRETE SURFACE. REPAIR CONFIGURATIONS SHOULD BE KEPT AS SIMPLE AS POSSIBLE, PREFERABLY WITH SQUARE CORNERS. COLOR OF NEW PATCH CONCRETE SHALL MATCH COLOR OF ADJACENT SURFACES AS CLOSELY AS POSSIBLE.

8. THE EXISTING STRUCTURE INFORMATION, INCLUDING DIMENSIONS SHOWN ON THESE DRAWINGS, IS BASED ON ORIGINAL DESIGN DRAWINGS AND SUBSEQUENT REPAIR DRAWINGS AND NOT GUARANTEED.

9. SPALLS, HOLLOW, DETERIORATED, AND SCALE AREAS SHALL BE REPAIRED IN ACCORDANCE WITH "SURFACE REPAIR CONCRETE DETAIL" SHOWN ON DWG. NOS S-15 AND S-16 WHERE REQUIRED, NOTED ON THE DRAWINGS AND AS DIRECTED BY THE ENGINEER.

10. CRACKS SHALL BE REPAIRED IN ACCORDANCE WITH EPOXY INJECTION CRACK REPAIR DETAIL SHOWN ON DWG. S-16.

11. MAXIMUM ANODE SPACING TO BE BASED ON REINFORCING STEEL DENSITY RATIO, SEE SPECIAL PROVISIONS. △1

REFERENCES:

1. SEE DWG. S-10 FOR ABUTMENT REPAIR LOCATIONS.
2. SEE DWGS. S-11, S-12, AND S-13 FOR PIER REPAIR LOCATIONS.

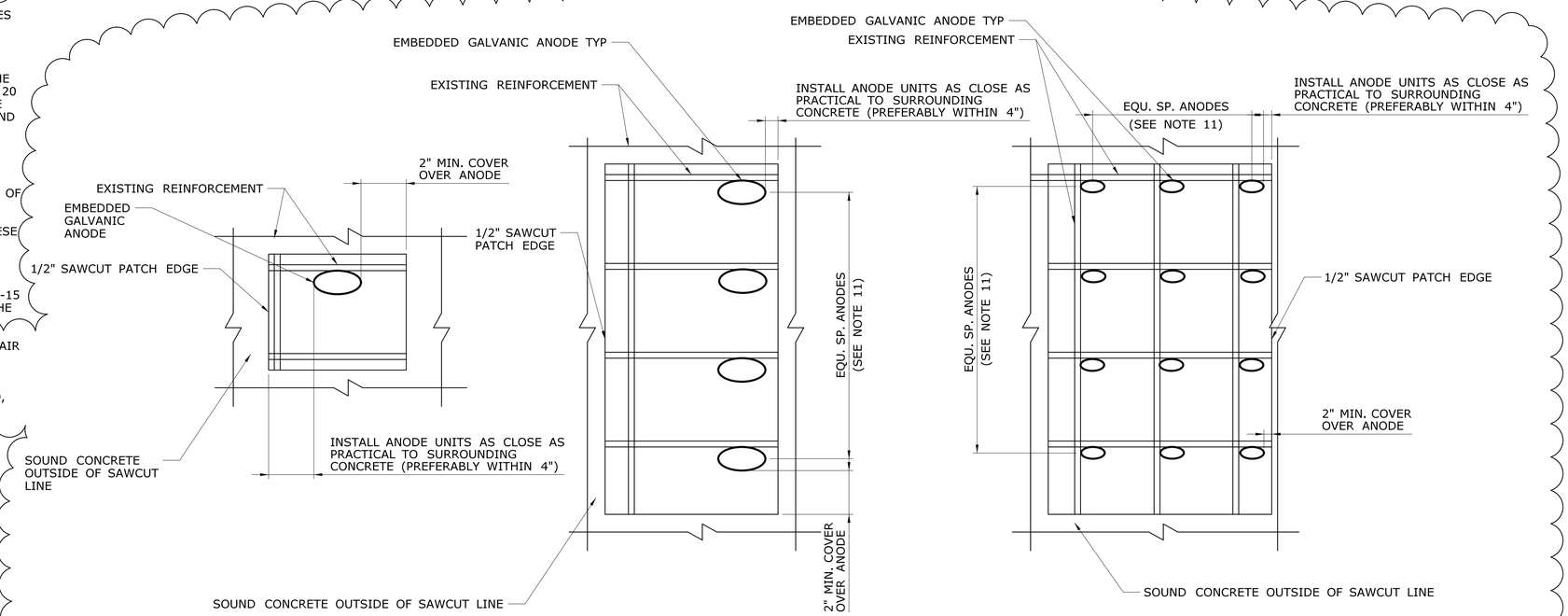

ANODE PLACEMENT - SMALL PATCH **ANODE PLACEMENT - NARROW PATCH** **ANODE PLACEMENT - LARGE RECTANGLULAR PATCH**

INSTALLATION OF EMBEDDED GALVANIC ANODES

NOT TO SCALE

△1

ADDENDUM NO. 1

REV.	DATE	REVISION DESCRIPTION	SHEET NO.
△1	12/6/2019	NOTES REVISED AND NEW DETAILS ADDED.	04.01.14.A1

THE INFORMATION, INCLUDING ESTIMATED QUANTITIES OF WORK, SHOWN ON THESE SHEETS IS BASED ON LIMITED INVESTIGATIONS BY THE STATE AND IS IN NO WAY WARRANTED TO INDICATE THE CONDITIONS OF ACTUAL QUANTITIES OF WORK WHICH WILL BE REQUIRED.

Plotted Date: 2/8/2020

DESIGNER/DRAFTER: A.M.
CHECKED BY: JPM
NOT TO SCALE

STATE OF CONNECTICUT
DEPARTMENT OF TRANSPORTATION

Filename: ...\SB_MSTL_0096_0201_SRD-1.dgn

SIGNATURE/BLOCK: STATE OF CONNECTICUT THOMAS A HARLEY 001480 LICENSED PROFESSIONAL ENGINEER

LOUIS BERGER US
A WSP COMPANY
55 CAPITAL BOULEVARD
ROCKY HILL, CT 06067

PROJECT TITLE: **REHABILITATION OF BRIDGE NO 04180 - I-84 WB OVER HOUSATONIC RIVER**

TOWN: **NEWTOWN/SOUTHBURY**

DRAWING TITLE: **SUBSTRUCTURE REPAIR DETAILS - 1**

PROJECT NO. **96-201**
DRAWING NO. **S-14**
SHEET NO. **04.01.14.A1**

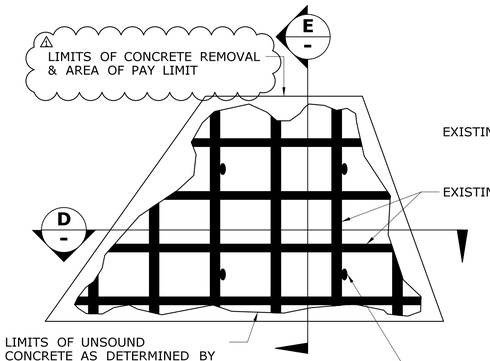

ELEVATION

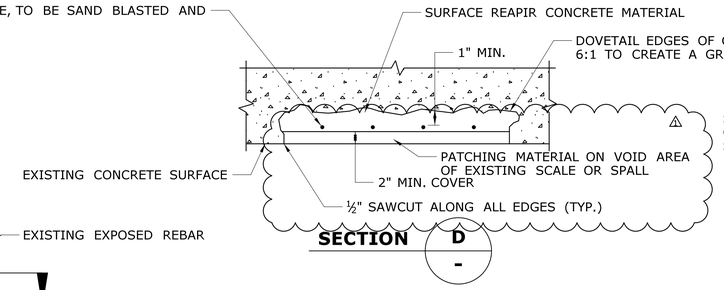

SECTION D -

NOTE:

IF, AFTER CONCRETE REMOVAL, THE REINFORCING STEEL HAS NOT BEEN EXPOSED, THE CONCRETE SHALL BE FURTHER REMOVED TO A DEPTH OF AT LEAST 1" BEHIND THE REINFORCING STEEL.

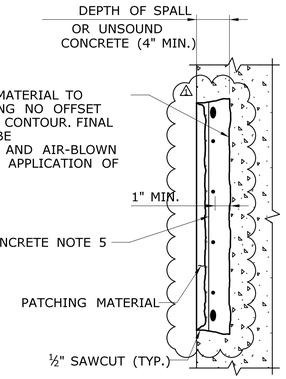

SECTION E -

SURFACE REPAIR CONCRETE DETAIL - WITHOUT BUILD-OUT

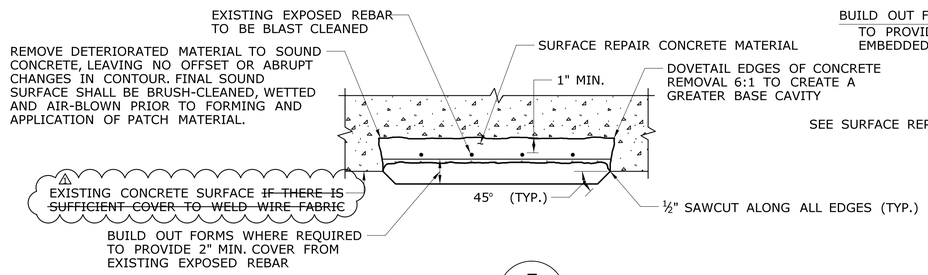

SECTION F -

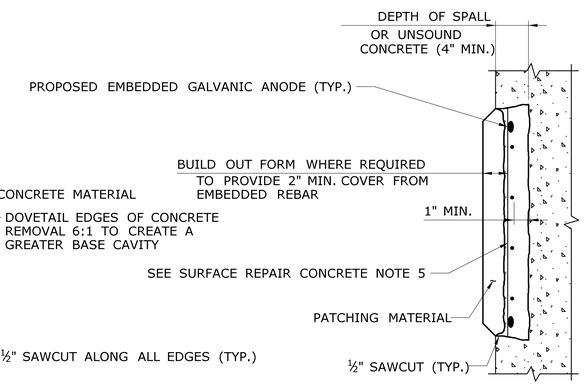

SECTION G -

SURFACE REPAIR CONCRETE PROCEDURE

1. SURFACE REPAIR CONCRETE DETAIL APPLIES TO DETERIORATED AREAS OF REINFORCED CONCRETE WHERE MORE THAN HALF THE REINFORCING IS EXPOSED AND THE AREA IS GREATER THAN 1 SQUARE FOOT OR AS DIRECTED BY THE ENGINEER.
2. THE LIMITS OF THE REPAIRS SHALL BE SAWCUT ALONG NEAT LINES, WHERE PRACTICAL, TO A DEPTH OF ½" TO PRODUCE A CLEAN EDGE, SEE SPECIAL PROVISIONS.
3. REMOVE DETERIORATED MATERIAL TO SOUND CONCRETE LEAVING NO OFFSET OR ABRUPT CHANGES IN CONTOUR.
4. CLEAN EXISTING REINFORCING STEEL AND CONCRETE (NEWLY EXPOSED), SEE SPECIFICATIONS. MISSING OR DETERIORATED REINFORCING STEEL SHALL BE REPLACED AND SPLICED AS SHOWN IN DETAIL OR AS DIRECTED BY THE ENGINEER. COST OF NEW REINFORCING STEEL AND SPLICING TO BE PAID UNDER THE COST FOR PATCHING MATERIAL.
5. INSTALL GALVANIC ANODES IN REPAIR AREA. ANODES SHALL BE PAID FOR UNDER ITEM 0603726 "EMBEDDED GALVANIC ANODES."
6. FORM AND PATCH SURFACE.
7. A MINIMUM OF 72 HOURS SHALL ELAPSE BETWEEN PLACING OF CONCRETE AND START OF NEXT ADJACENT PATCH.
8. ALL NEW EXPOSED CONCRETE SURFACES WITHIN AREA TO BE REPAIRED SHALL BE RUBBED TO PRODUCE A SMOOTH FINISH.

SURFACE REPAIR CONCRETE NOTES

1. ALL WORK SHOWN ON THIS DRAWING SHALL BE PERFORMED WHERE DIRECTED BY THE ENGINEER.
2. SURFACE REPAIR CONCRETE REPAIRS SHALL BE PAID UNDER ITEM "SURFACE REPAIR CONCRETE". SEE SECTION 6.01 INCLUDED IN THE SPECIAL PROVISIONS.
3. SURFACE PREPARATION, PROPORTIONING AND MIXING OF MATERIALS, APPLICATION OF MATERIALS AND REPAIR PROCEDURES SHALL BE IN ACCORDANCE WITH THE MANUFACTURER'S RECOMMENDATIONS.
4. NEW CONCRETE PATCHES SHALL MATCH SHAPE OF EXISTING CONCRETE SURFACES. COLOR OF NEW PATCH CONCRETE SHALL MATCH COLOR OF THE ADJACENT SURFACES AS CLOSELY AS POSSIBLE.
5. EXPOSED REINFORCING BARS AND CONCRETE SURFACE SHALL BE SAND BLAST CLEANED.
6. THE REMOVAL OF DETERIORATED CONCRETE SHALL PROCEED AS DIRECTED BY THE ENGINEER. IF THE REMOVAL OF DETERIORATED CONCRETE BECOMES EXCESSIVE, THE REMOVAL WORK SHALL BE STOPPED AT THE LOCATION AND THE ENGINEER NOTIFIED IMMEDIATELY. ~~COST OF REMOVAL OF DETERIORATED CONCRETE AND SURFACE PREPARATION OF THE REPAIR AREA SHALL BE INCLUDED IN THE APPROPRIATE PAY ITEM OF THE PATCHING MATERIAL.~~
7. AREAS DISTURBED BY CONSTRUCTION SHALL BE RESTORED TO THEIR ORIGINAL CONDITION UNLESS OTHERWISE NOTED OR AS ORDERED BY THE ENGINEER.
8. REPAIR DETAILS APPLY TO THE SPALLED, SCALED, AND HOLLOW AREAS IN ABUTMENTS AND PIERS WHERE REQUIRED AND NOTED ON DRAWINGS AND AS ORDERED BY THE ENGINEER.
9. MECHANICAL COUPLER TO BE USED WHERE REQUIRED LAP LENGTH IS NOT AVAILABLE.

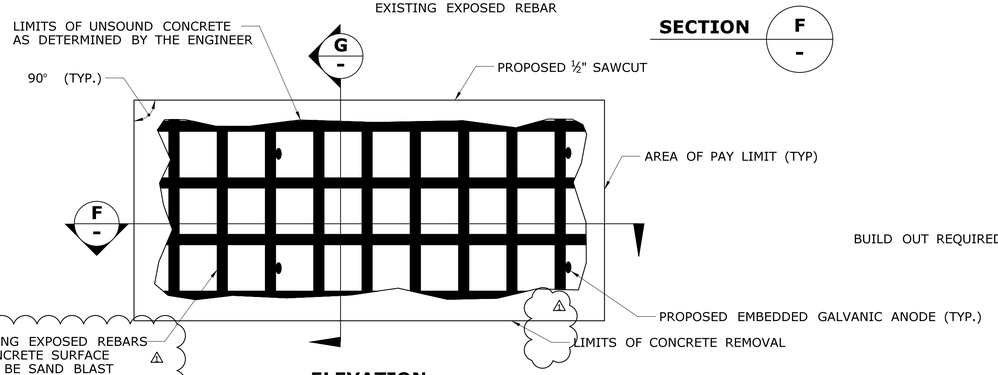

ELEVATION

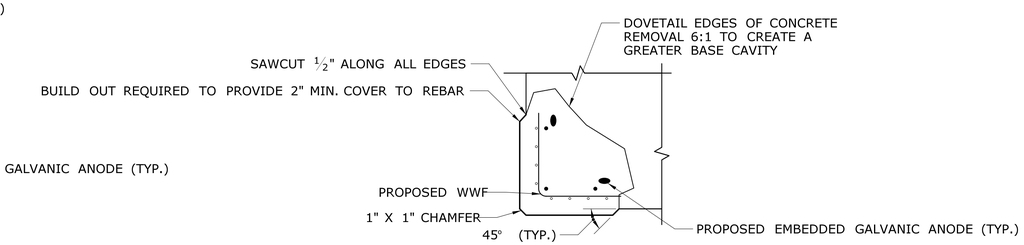

CORNER PATCH DETAIL

TYPICAL DETAIL APPLICABLE FOR TOP EDGE OF PIER CAPS. WORK WITH "~~SUBSTRUCTURE CONCRETE~~ SURFACE REPAIR CONCRETE ~~REPAIR~~" DETAILS AND PROCEDURE NOTES ON THIS SHEET.

SURFACE REPAIR CONCRETE DETAIL - WITH BUILD-OUT

ADDENDUM NO. 1

REV.	DATE	REVISION DESCRIPTION	SHEET NO.
1	12/6/2019	NOTES AND DETAILS REVISED.	04.01.15.A1

THE INFORMATION, INCLUDING ESTIMATED QUANTITIES OF WORK, SHOWN ON THESE SHEETS IS BASED ON LIMITED INVESTIGATIONS BY THE STATE AND IS IN NO WAY WARRANTED TO INDICATE THE CONDITIONS OF ACTUAL QUANTITIES OF WORK WHICH WILL BE REQUIRED.

Plotted Date: 2/6/2020

DESIGNER/DRAFTER: A.M.
CHECKED BY: JPM
NOT TO SCALE

STATE OF CONNECTICUT
DEPARTMENT OF TRANSPORTATION

Filename: ...\SB_MSTL_0096_0201_SRD-2.dgn

SIGNATURE/BLOCK: STATE OF CONNECTICUT THOMAS A HARLEY 0014890 LICENSED PROFESSIONAL ENGINEER

LOUIS BERGER US
A WSP COMPANY
55 CAPITAL BOULEVARD
ROCKY HILL, CT 06067

PROJECT TITLE:
REHABILITATION OF BRIDGE NO 04180 - I-84 WB OVER HOUSATONIC RIVER

TOWN: **NEWTOWN/SOUTHBURY**

DRAWING TITLE: **SUBSTRUCTURE REPAIR DETAILS - 2**

PROJECT NO. **96-201**
DRAWING NO. **S-15**
SHEET NO. **04.01.15.A1**

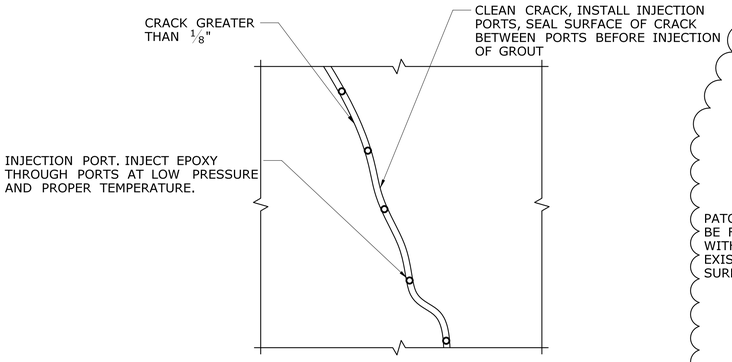

REPAIR PROCEDURE FROM CRACKS 1/8" - 1/4" WIDE

SCALE: N.T.S.

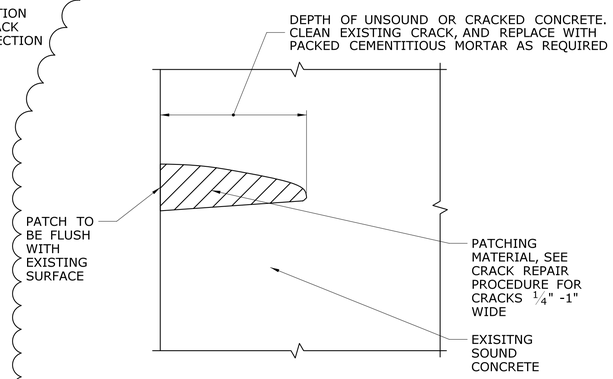

REPAIR PROCEDURE FROM CRACKS 1/4" - 1" WIDE

SCALE: N.T.S.

EPOXY INJECTION CRACK REPAIR NOTES

1. ANY CRACKS IDENTIFIED ON THE PLANS OR BY THE ENGINEER THAT HAVE EVIDENCE OF RUST STAINING OR ARE GREATER THAN 1" WIDE SHALL BE DELINEATED AND REPAIRED AS A SURFACE REPAIR CONCRETE REPAIR.
2. CONCRETE CRACK REPAIR, INCLUDING CEMENTITIOUS METERIAL AND DELINATION, SHALL BE PAID FOR UNDER ITEM 0601954 "EPOXY INJECTION CRACK REPAIR."
3. PORT SPACING FOR EPOXY INJECTION CRACK REPAIR SHALL NOT EXCEED THE THICKNESS OF THE MEMBER BEING REPAIRED. SEE SPECIAL PROVISIONS.
4. CONTRACTOR SHALL TAKE CARE TO AVOID EXISTING REINFORCEMENT DURING INJECTION PORT DRILLING.
5. ANY CRACKS THAT MEASURE LESS THAN 1/8" AT THEIR WIDEST POINT SHALL NOT BE REPAIRED UNLESS DIRECTED BY THE ENGINEER.

CRACK REPAIR PROCEDURE FOR CRACKS 1/4" - 1" WIDE

1. SURFACE PREPARATION
   - A. REMOVE ALL LOOSE, DETERIORATED CONCRETE, DIRT, OIL, GREASE, AND ALL BOND-INHIBITING MATERIALS FROM SURFACE.
   - B. PROVIDE MINIMUM REPAIR DEPTH OF 1/8".
   - C. PREPARATION WORK SHALL BE DONE BY SCABBLER, CHISELING, WIRE BRUSHING, OR OTHER APPROPRIATE MEANS.
   - D. ROUGHEN CONTACT SURFACE WITH A MINIMUM PROFILE OF APPROX. 1/16 " FOR BONDING WITH NEW MORTAR.
   - E. SATURATE SURFACE WITH CLEAN WATER.
   - F. SUBSTRATE SHOULD BE SATURATED SURFACE DRY WITH NO STANDING WATER.
2. APPLICATION AND FINISH:
   - A. MIX COMPONENTS OF PATCHING MORTAR AND EPOXY ADHESIVE IN ACCORDANCE TO THE MANUFACTURER'S SPECIFICATIONS.
   - B. APPLY EPOXY ADHESIVE ONTO THE CONCRETE WITH A BRUSH OR BROOM.
   - C. APPLY THE PATCHING MORTAR WHILE THE EPOXY ADHESIVE IS STILL TACKY. IF THE COATING BECOMES GLOSSY AND LOSES TACKINESS, REMOVE ANY SURFACE CONTAMINANTS AND RECOAT WITH ADDITIONAL EPOXY ADHESIVE AND PROCEED WITH PATCHING WORK.
   - D. SCRUB REPAIR MORTAR INTO THE SUBSTRATE, FILLING ALL PORES AND VOIDS. FORCE MATERIAL AGAINST EDGE OF REPAIR, WORKING TOWARDS THE CENTER.
   - E. MATERIAL MAY BE APPLIED IN MULTIPLE LIFTS. EACH LIFT THICKNESS SHALL NOT BE LESS THAN 1/8" NOR GREATER THAN 3" THICK.
   - F. WHERE MULTIPLE LIFTS ARE REQUIRED, SCORE TOP SURFACE OF EACH LIFT TO PRODUCE A ROUGHENED SURFACE FOR NEXT LIFT. ALLOW PROCEEDING LIFT TO REACH FINAL SET, 30 MINUTES MINIMUM, BEFORE APPLYING FRESH MATERIAL.
   - G. SATURATE SURFACE OF THE LIFT WITH CLEAN WATER.
   - H. SCRUB FRESH MORTAR INTO PROCEEDING LIFT.
   - I. AFTER FILLING REPAIR, CONSOLIDATE, THEN SCREED.
   - J. ALLOW MORTAR TO SET TO DESIRED STIFFNESS, THEN FINISH WITH WOOD OR SPONGE FLOAT FOR A SMOOTH SURFACE.
3. CURING:
   - A. CURING SHALL COMMENCE IMMEDIATELY AFTER FINISHING.
   - B. IF NECESSARY, PROTECT NEWLY APPLIED MATERIAL FROM DIRECT SUNLIGHT, WIND, RAIN, OR FROST.
   - C. MOIST CURE WITH FINE MIST OF WATER OR WITH WET BURLURLAP AND POLYETHYLENE.

CRACK REPAIR PROCEDURE FOR CRACKS 1/8" - 1/4" WIDE

1. SURFACE PREPARATION:
   - A. REMOVE DUST, LAITANCE, GREASE, IMPREGNATION, FOREIGN PARTICLES AND DISINTEGRATED MATERIALS, SURFACE MUST BE CLEAN AND SOUND WITH A ROUGHENED TEXTURE. IDEALLY DRY, SURFACE MAY BE DAMP BUT SHALL BE FREE OF STANDING WATER.
2. APPLICATION AND FINISH:
   - A. SET GROUT PRESSURE INJECTION PORTS INTO PLACE.
   - B. MIX EPOXY ADHESIVE PER MANUFACTURER'S SPECIFICATION.
   - C. SEAL CRACKS AND PORTS BY APPLYING MIXED EPOXY ADHESIVE MATERIAL OVER THE CRACKS TO BE PRESSURE INJECTED WITH THE HIGH-STRENGTH EPOXY GROUT.
   - D. MIX EPOXY GROUT PER MANUFACTURER'S SPECIFICATION.
   - E. WHEN THE EPOXY ADHESIVE HAS CURED, INJECT THE EPOXY GROUT WITH STEADY PREESURE.
   - F. ALLOW THE INJECTED EPOXY GROUT TO SET THEN CUT THE PRESSURE INJECTION PORTS FLUSH WITH THE ADHESIVE.

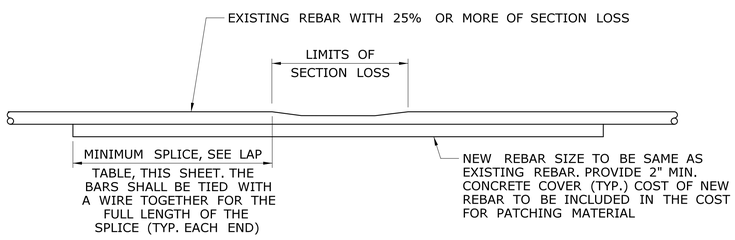

REINFORCING BAR SPLICE LENGTH TABLE		
	BAR SIZE	LAP LENGTH
REINFORCEMENT SPACING @ > 6" O.C. **	#4	1'-10"
	#5	2'-3"
	#6	2'-9"
	#7	3'-3"
	#8	3'-8"

** FOR BARS SPACED LESS THAN 6" O.C. MULTIPLY TABLE VALUES BY 1.25

LAPPED TIED SPLICE BAR

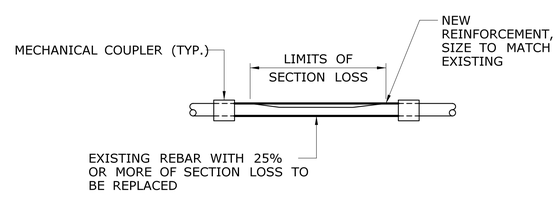

MECHANICAL SPLICE BAR

REINFORCEMENT SPLICE DETAIL

NOTE

1. MECHANICAL SPLICERS ARE AN ACCEPTABLE ALTERNATE IF APPROVED BY THE ENGINEER.

ADDENDUM NO. 1

REV.	DATE	REVISION DESCRIPTION	SHEET NO.
1	2/6/2019	NOTES AND DETAILS REVISED. NEW DETAILS ADDED.	04.01.16.A1

THE INFORMATION, INCLUDING ESTIMATED QUANTITIES OF WORK, SHOWN ON THESE SHEETS IS BASED ON LIMITED INVESTIGATIONS BY THE STATE AND IS IN NO WAY WARRANTED TO INDICATE THE CONDITIONS OF ACTUAL QUANTITIES OF WORK WHICH WILL BE REQUIRED.

Plotted Date: 2/14/2020

DESIGNER/DRAFTER: A.M.
CHECKED BY: JPM
NOT TO SCALE

STATE OF CONNECTICUT
DEPARTMENT OF TRANSPORTATION

Filename: ...\SB_MSTL_0096_0201_SRD-3.dgn

SIGNATURE/BLOCK: STATE OF CONNECTICUT THOMAS A. HARLEY 001490 LICENSED PROFESSIONAL ENGINEER

LOUIS BERGER US
A WSP COMPANY
55 CAPITAL BOULEVARD
ROCKY HILL, CT 06067

PROJECT TITLE: REHABILITATION OF BRIDGE NO 04180 - I-84 WB OVER HOUSATONIC RIVER

TOWN: NEWTOWN/SOUTHBURY

DRAWING TITLE: SUBSTRUCTURE REPAIR DETAILS - 3

PROJECT NO. 96-201
DRAWING NO. S-16
SHEET NO. 04.01.16.A1

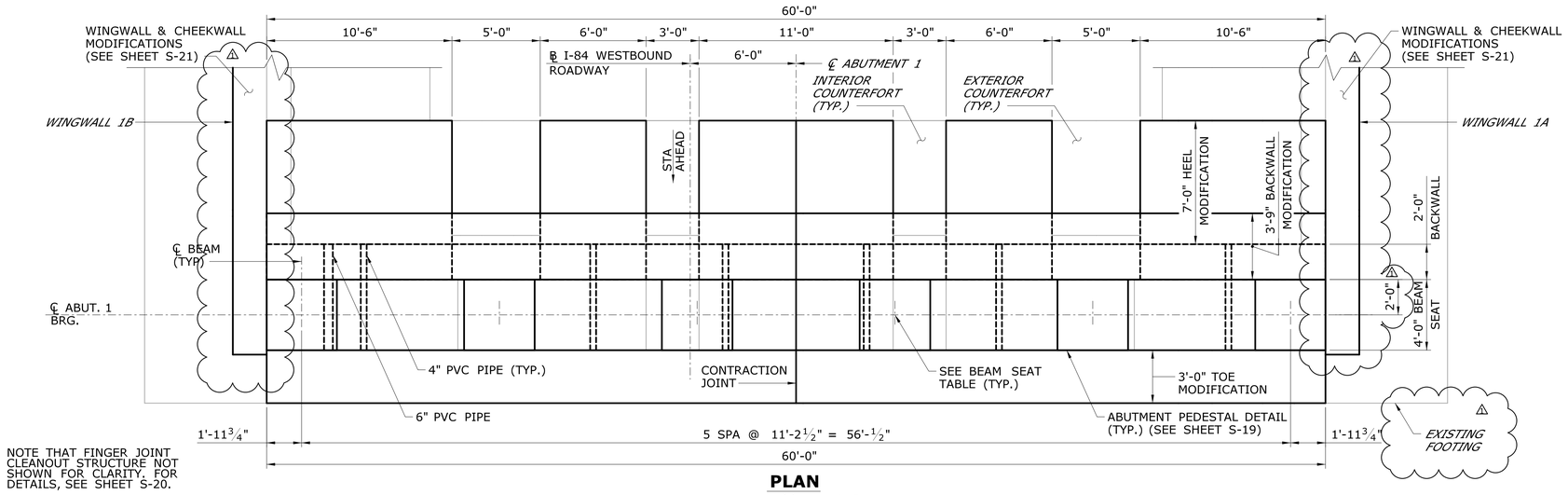

PLAN

SCALE: ¼ = 1'-0"

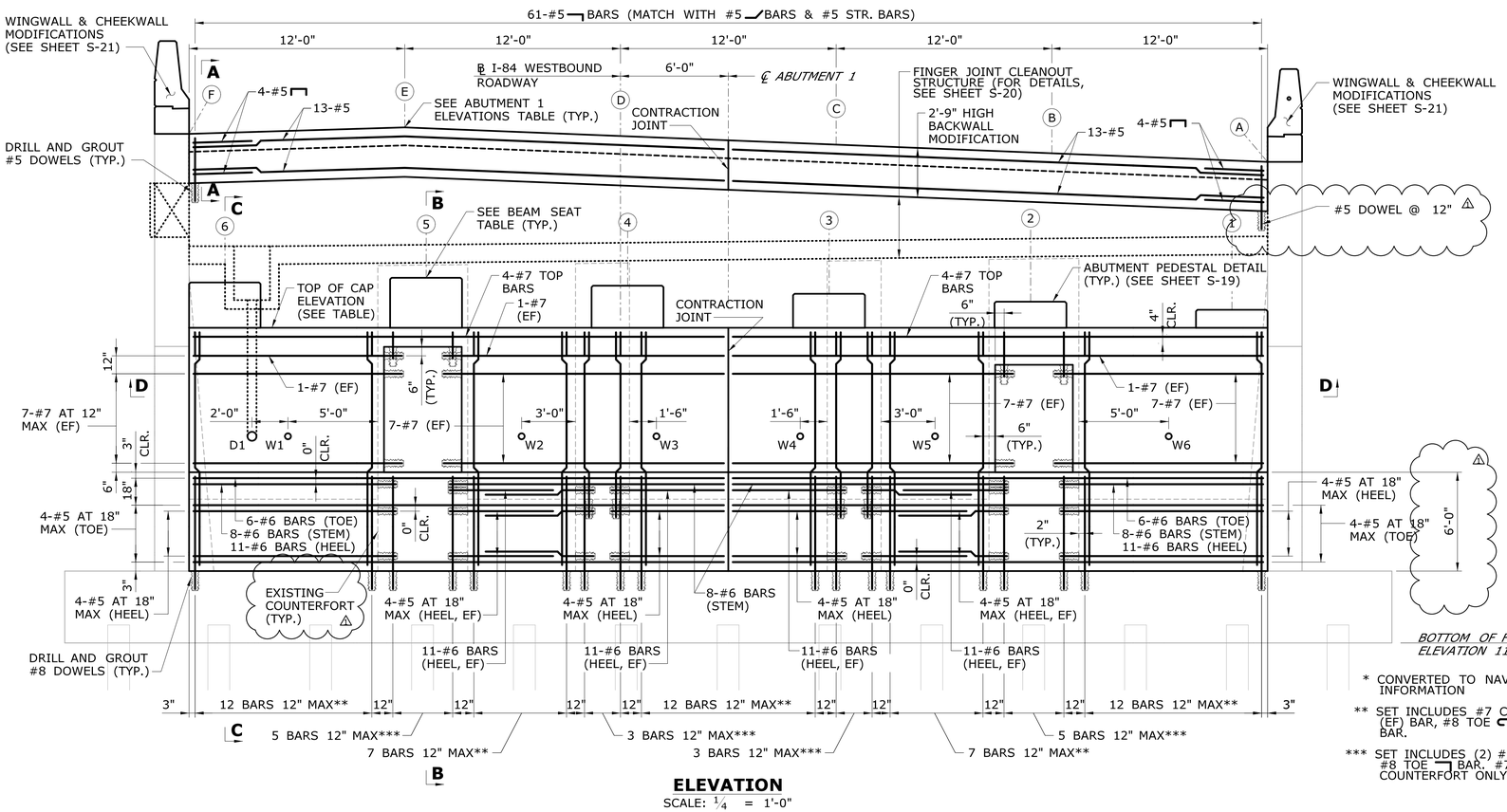

ELEVATION

SCALE: ¼ = 1'-0"

* CONVERTED TO NAVD 88 FROM AS-BUILT INFORMATION

** SET INCLUDES #7 CAP BAR, #7 STEM (EF) BAR, #8 TOE BAR, AND #8 HEEL BAR.

*** SET INCLUDES (2) #7 CAP BAR, AND (2) #8 TOE BAR. #7 STEM AT INTERIOR COUNTERFORT ONLY.

ABUTMENT 1 ELEVATIONS

	ABUTMENT 1
BEAM 1	131.09
BEAM 2	131.54
BEAM 3	131.98
BEAM 4	132.43
BEAM 5	132.87
BEAM 6	132.61
CAP	130.09
BACKWALL A	139.32
BACKWALL B	139.80
BACKWALL C	140.28
BACKWALL D	140.76
BACKWALL E	141.24
BACKWALL F	140.88
DRAINAGE D1	124.05
WEEPHOLE W1	124.05
WEEPHOLE W2	124.05
WEEPHOLE W3	124.05
WEEPHOLE W4	124.05
WEEPHOLE W5	124.05
WEEPHOLE W6	124.05

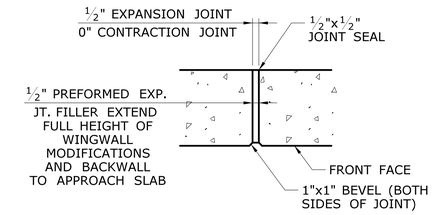

VERTICAL JOINT DETAIL

N.T.S.

JOINT NOTES

1. ½" PREFORMED EXPANSION JOINT FILLER SHALL BE INCLUDED IN THE ITEM "½" PREFORMED EXPANSION JOINT FILLER". THE JOINT SEAL SHALL BE INCLUDED IN THE ITEM "ABUTMENT AND WALL CONCRETE".
2. ABUTMENTS - CONTRACTION JOINT SEAL TO EXTEND FROM TOP OF FOOTING TO TOP OF STEM AND TO EXTEND FROM BOTTOM OF BACKWALL MODIFICATION TO TOP OF BACKWALL MODIFICATION AND ALONG TOP OF BACKWALL.
3. WINGWALLS - JOINT SEAL TO EXTEND FROM THE BOTTOM OF WINGWALL MODIFICATION TO TOP OF PARAPET AND HORIZONTALLY ALONG THIS JOINT TO OUTSIDE FACE OF PARAPET.
4. REINFORCEMENT - NO REINFORCEMENT SHALL PASS THROUGH EXPANSION OR CONTRACTION JOINTS.

REFERENCES

1. FOR GENERAL PLAN, SEE DWG. NO. S-02.
2. FOR GENERAL NOTES, SEE DWG. NO. S-03.
3. FOR ABUTMENT AND WINGWALL DEMOLITION LIMITS, SEE DWG. NO. S-06 THROUGH NO. S-09.
4. FOR ABUTMENT MODIFICATION SECTIONS B-B, C-C, & D-D, SEE DWG. NO. S-19.
5. FOR WINGWALL MODIFICATION DETAILS, SEE DWG. NO. S-21.
6. FOR DISC BEARING DETAILS, SEE DWG. NO S-35.
7. FOR REINFORCEMENT DOWEL EMBEDMENT/LAP LENGTHS TABLE, SEE DWG. NO. S-19.
8. FOR SECTION A-A, SEE DWG. NO. S-18.
9. THE QUANTITIES OF 6" PVC PIPE SHALL BE INCLUDED IN THE ITEM "6" PIPE FOR BRIDGE DRAINAGE".

ADDENDUM NO. 1

REV.	DATE	REVISION DESCRIPTION	SHEET NO.
1	02/07/2020	MISCELLANEOUS CALLOUT REVISIONS	04.02.17.A1

THE INFORMATION, INCLUDING ESTIMATED QUANTITIES OF WORK, SHOWN ON THESE SHEETS IS BASED ON LIMITED INVESTIGATIONS BY THE STATE AND IS IN NO WAY WARRANTED TO INDICATE THE CONDITIONS OF ACTUAL QUANTITIES OF WORK WHICH WILL BE REQUIRED.

Plotted Date: 2/14/2020

DESIGNER/DRAFTER: **GMP/MWQ**

CHECKED BY: **WSC**

SCALE AS NOTED

STATE OF CONNECTICUT
DEPARTMENT OF TRANSPORTATION

Filename: ...\SB_MSTL_0096_0201_ABUTMENT 1-WB.dgn

SIGNATURE/BLOCK: STATE OF CONNECTICUT THOMAS A. HARLEY 0014890 LICENSED PROFESSIONAL ENGINEER

LOUIS BERGER US
A WSP COMPANY
55 CAPITAL BOULEVARD
ROCKY HILL, CT 06067

PROJECT TITLE: **REHABILITATION OF BRIDGE NO. 04180- I-84 WB OVER HOUSATONIC RIVER**

TOWN: **NEWTOWN/SOUTHBURY**

DRAWING TITLE: **ABUTMENT 1 PLAN & ELEVATION**

PROJECT NO. **96-201**

DRAWING NO. **S-17**

SHEET NO. **04.01.17.A1**

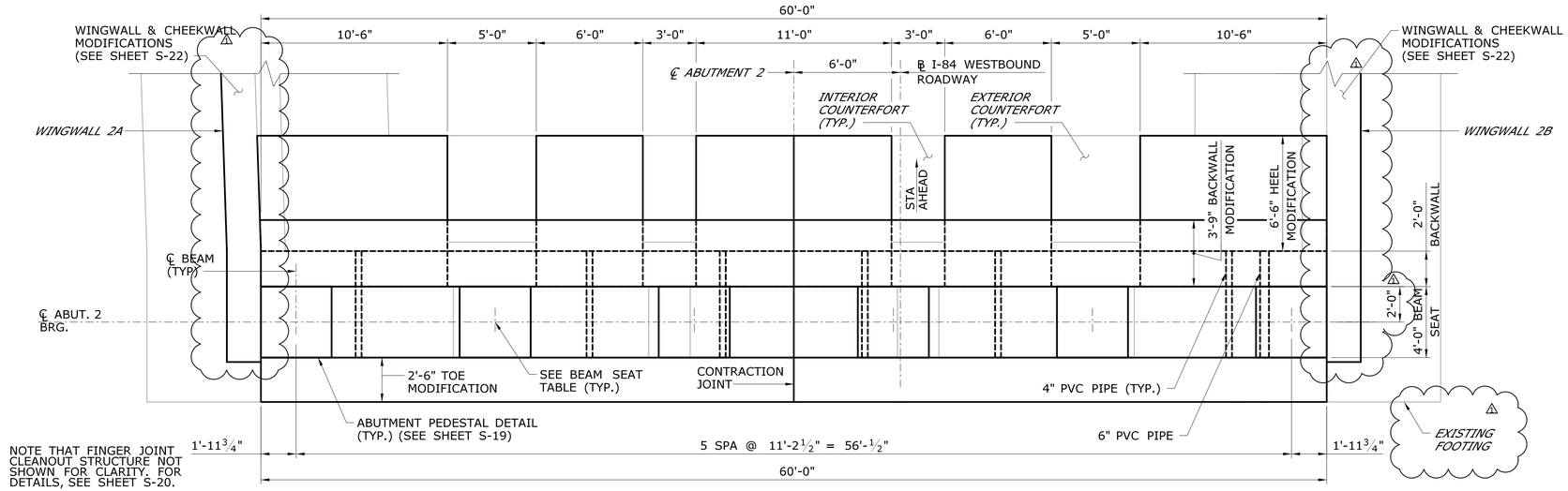

PLAN

SCALE: ¼ = 1'-0"

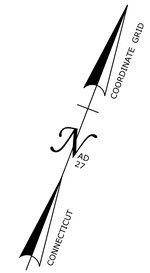

ABUTMENT 2 ELEVATIONS

	ABUTMENT 2
BEAM 1	127.37
BEAM 2	127.80
BEAM 3	128.02
BEAM 4	128.19
BEAM 5	128.03
BEAM 6	127.61
CAP	126.37
BACKWALL A	135.59
BACKWALL B	136.07
BACKWALL C	136.31
BACKWALL D	136.49
BACKWALL E	136.31
BACKWALL F	135.83
DRAINAGE D1	124.05
WEEPHOLE W1	124.05
WEEPHOLE W2	124.05
WEEPHOLE W3	124.05
WEEPHOLE W4	124.05
WEEPHOLE W5	124.05
WEEPHOLE W6	124.05

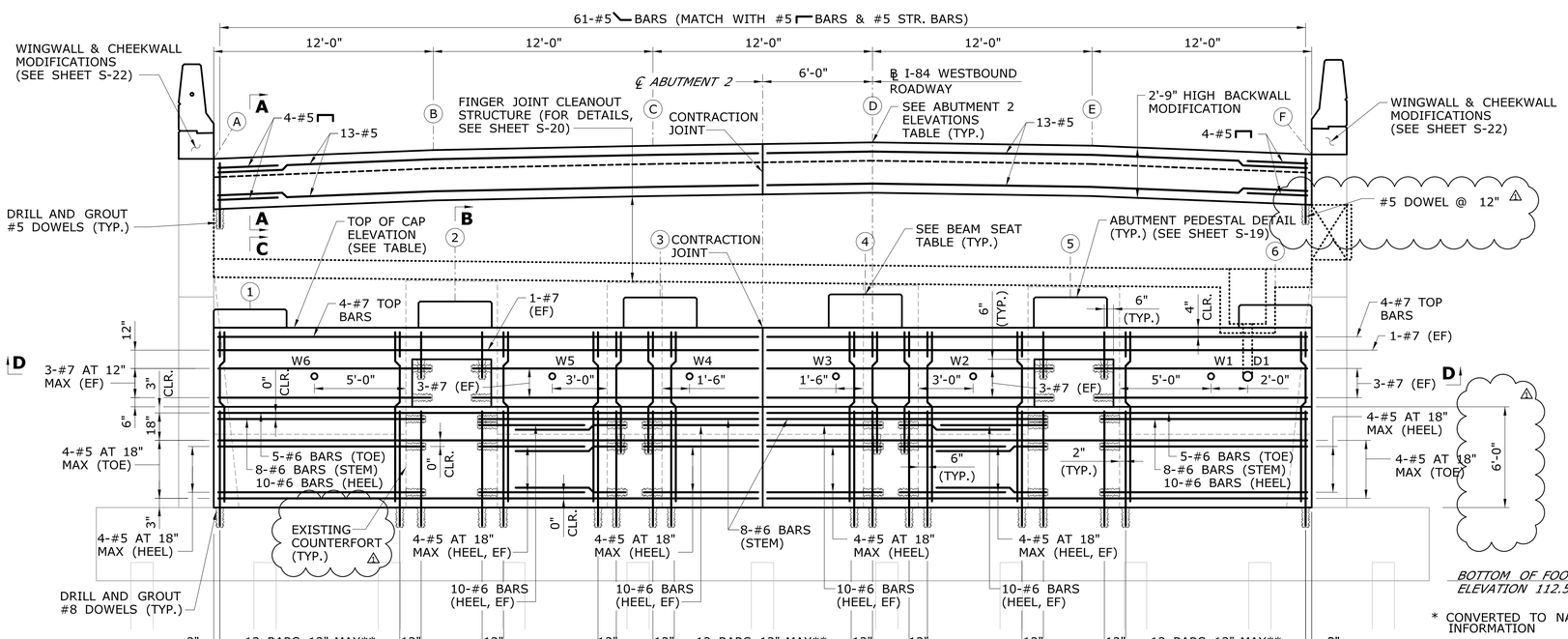

ELEVATION

SCALE: ¼ = 1'-0"

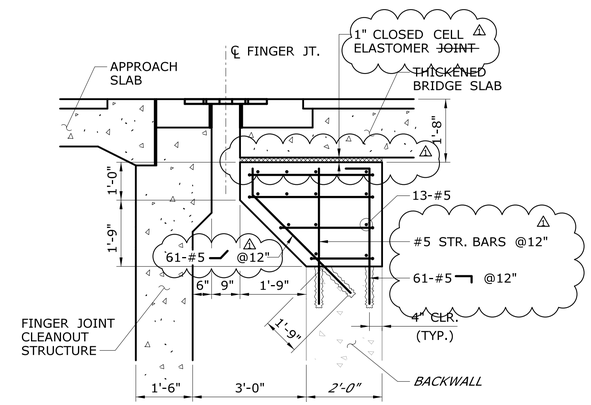

SECTION A-A

SCALE: ½ = 1'-0"

*BOTTOM OF FOOTING ELEVATION 112.55**

* CONVERTED TO NAVD 88 FROM AS-BUILT INFORMATION

** SET INCLUDES #7 CAP BAR, #7 STEM (EF) BAR, #8 TOE BAR, AND #8 HEEL BAR.

*** SET INCLUDES (2) #7 CAP BAR, AND (2) #8 TOE BAR. #7 STEM AT INTERIOR COUNTERFORT ONLY.

REFERENCES

1. FOR GENERAL PLAN, SEE DWG. NO. S-02.
2. FOR GENERAL NOTES, SEE DWG. NO. S-03.
3. FOR ABUTMENT AND WINGWALL DEMOLITION LIMITS, SEE DWG. NO. S-06 THROUGH NO. S-09.
4. FOR ABUTMENT MODIFICATION SECTIONS B-B, C-C, & D-D, SEE DWG. NO. S-19.
5. FOR WINGWALL MODIFICATION DETAILS, SEE DWG. NO. S-22.
6. FOR DISC BEARING DETAILS, SEE DWG. NO S-35.
7. FOR REINFORCEMENT DOWEL EMBEDMENT/LAP LENGTHS TABLE, SEE DWG. NO. S-19.
8. FOR FINGER JOINT DETAILS, SEE DWG. NO. S-39.
9. THE QUANTITIES OF 6" PVC PIPE SHALL BE INCLUDED IN THE ITEM "6" PIPE FOR BRIDGE DRAINAGE".

ADDENDUM NO. 1

REV.	DATE	REVISION DESCRIPTION	SHEET NO.
1	02/07/2020	MISCELLANEOUS CALLOUT REVISIONS	04.02.18.A1

THE INFORMATION, INCLUDING ESTIMATED QUANTITIES OF WORK, SHOWN ON THESE SHEETS IS BASED ON LIMITED INVESTIGATIONS BY THE STATE AND IS IN NO WAY WARRANTED TO INDICATE THE CONDITIONS OF ACTUAL QUANTITIES OF WORK WHICH WILL BE REQUIRED.

Plotted Date: 2/14/2020

DESIGNER/DRAFTER: GMP/MWQ
CHECKED BY: WSC
SCALE AS NOTED

STATE OF CONNECTICUT
DEPARTMENT OF TRANSPORTATION

Filename: ...\SB_MSTL_0096_0201_ABUTMENT 2-WB.dgn

SIGNATURE/BLOCK: STATE OF CONNECTICUT THOMAS A HARRIGAN 0014890 LICENSED PROFESSIONAL ENGINEER

LOUIS BERGER US
A WSP COMPANY
55 CAPITAL BOULEVARD
ROCKY HILL, CT 06067

PROJECT TITLE:
REHABILITATION OF BRIDGE NO. 04180- I-84 WB OVER HOUSATONIC RIVER

TOWN: **NEWTOWN/SOUTHBURY**

DRAWING TITLE: **ABUTMENT 2 PLAN & ELEVATION**

PROJECT NO. **96-201**
DRAWING NO. **S-18**
SHEET NO. **04.01.18.A1**

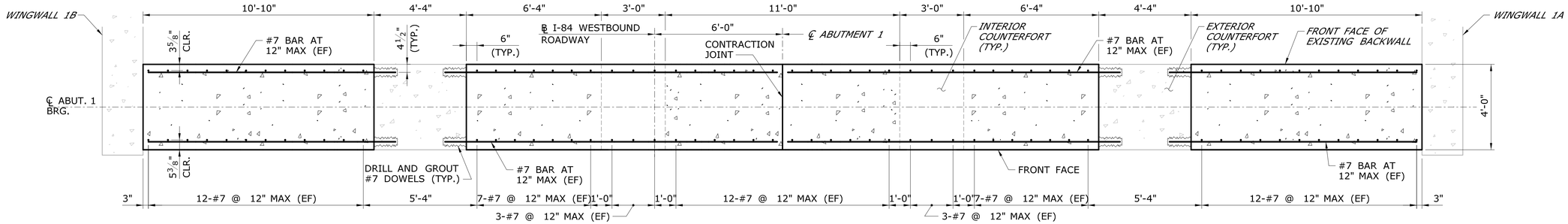

SECTION D-D

ABUTMENT 1 SHOWN, ABUTMENT 2 SIMILAR
SCALE: 3/8 = 1'-0"

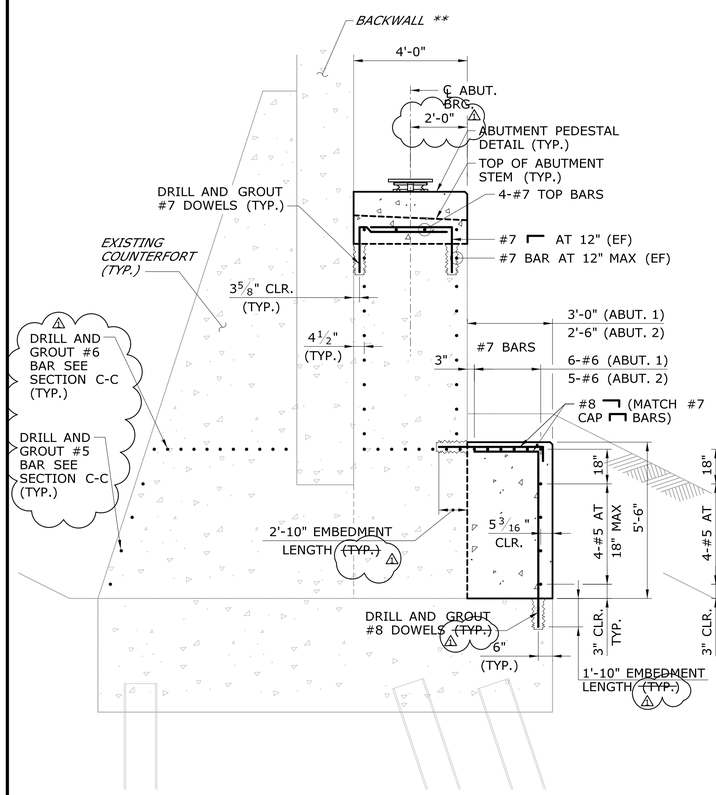

SECTION B-B

SCALE: 3/8 = 1'-0"

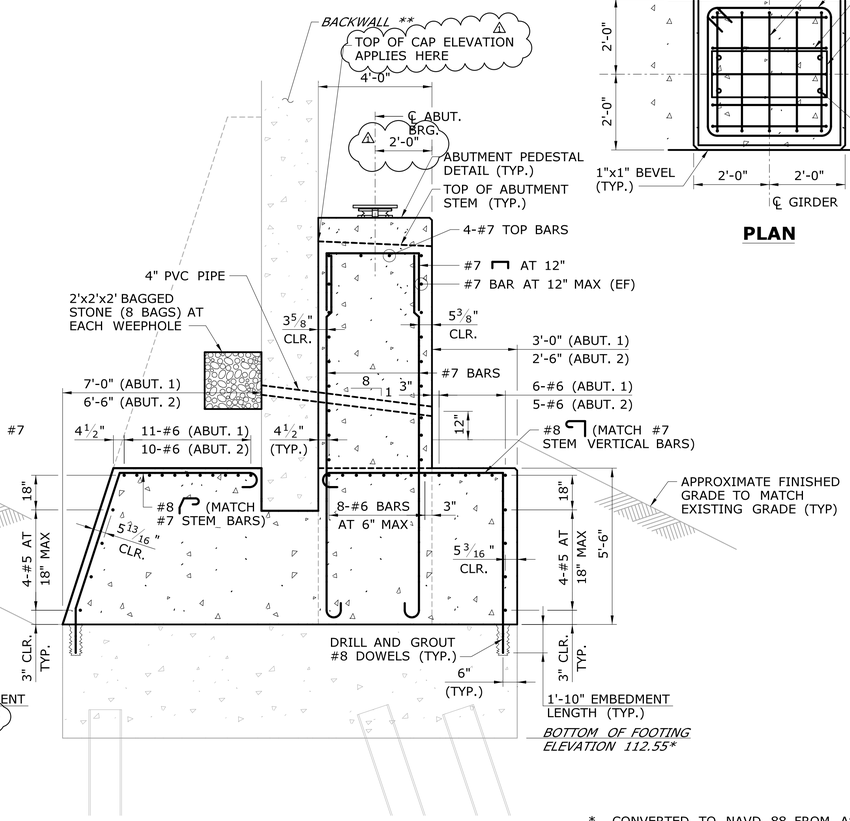

SECTION C-C

SCALE: 3/8 = 1'-0"

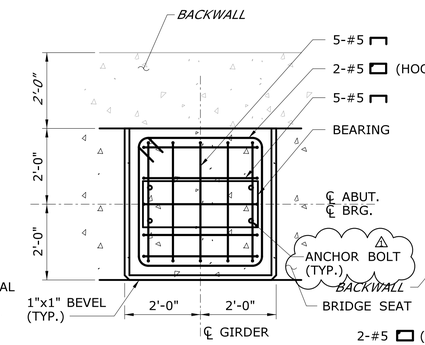

PLAN

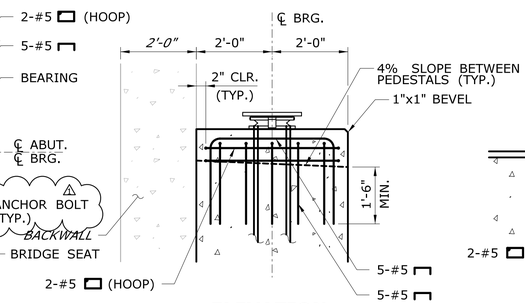

ELEVATION

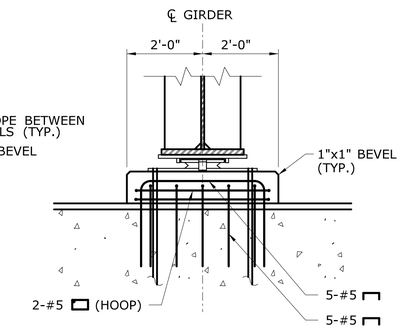

ELEVATION

ABUTMENT PEDESTAL DETAIL

SCALE: 1/2" = 1'-0"

REINFORCEMENT DOWEL EMBEDMENT/LAP LENGTHS		
HORIZONTAL BARS		
BAR SIZE	DOWEL LENGTH	LAP LENGTH
#4	-	15"
#5	14"	19"
#6	17"	23"
#7	20"	27"
#8	34"	-
VERTICAL BARS		
BAR SIZE	DOWEL LENGTH	LAP LENGTH
#5	21"	-
#6	25"	33"
#7	30"	38"
#8	22"	-

USE LENGTH IN TABLE UNLESS DETAIL NOTES DIFFERENT VALUE FOR INDIVIDUAL BAR.

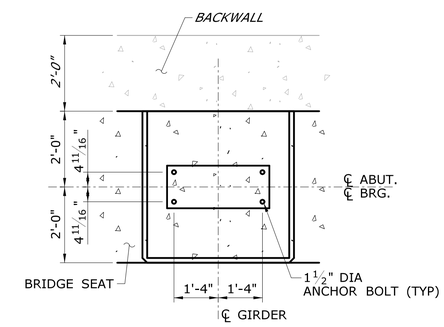

ANCHOR BOLT PLAN AT ABUTMENTS

SCALE: 1/2" = 1'-0"

* CONVERTED TO NAVD 88 FROM AS-BUILT INFORMATION.

** BACKWALL MODIFICATION FOR FINGER JOINT DRAINAGE NOT SHOWN FOR CLARITY. FOR DETAILS, SEE DWG. NO S-20.

REFERENCES

1. FOR GENERAL PLAN, SEE DWG. NO. S-02.
2. FOR GENERAL NOTES, SEE DWG. NO. S-03.
3. FOR ABUTMENT DEMOLITION LIMITS, SEE DWG. NO. S-06 THROUGH NO. S-09.
4. FOR ABUTMENT MODIFICATION PLANS AND ELEVATIONS, SEE DWG. NO. S-17 AND NO. S-18.
5. FOR DISC BEARING DETAILS, SEE DWG. NO S-35.
6. APPLY DAMPPROOFING COATING TO REAR FACES OF BACKWALL AND WINGWALLS, OUTSIDE FACES OF CLEANOUT STRUCTURE, AND TOP & SIDE FACES OF COUNTERFORTS, FRONT FACE OF TOE, & FOOTING BEHIND BACKWALL.
7. THE QUANTITIES OF BAGGED STONE FOR WEEPHOLES SHALL BE INCLUDED IN THE ITEM "PERVIOUS STRUCTURE BACKFILL".

ADDENDUM NO. 1

REV.	DATE	REVISION DESCRIPTION	SHEET NO.
1	02/07/2020	MISCELLANEOUS CALLOUT REVISIONS	04.02.19.A1

THE INFORMATION, INCLUDING ESTIMATED QUANTITIES OF WORK, SHOWN ON THESE SHEETS IS BASED ON LIMITED INVESTIGATIONS BY THE STATE AND IS IN NO WAY WARRANTED TO INDICATE THE CONDITIONS OF ACTUAL QUANTITIES OF WORK WHICH WILL BE REQUIRED.

Plotted Date: 2/14/2020

DESIGNER/DRAFTER: GMP/MWQ
CHECKED BY: WSC
SCALE AS NOTED

STATE OF CONNECTICUT
DEPARTMENT OF TRANSPORTATION

Filename: ...\SB_MSTL_0096_0201_ABUTMENT DETAIL 1-WB.dgn

SIGNATURE/BLOCK: STATE OF CONNECTICUT THOMAS A. FARLEY 0014850 LICENSED PROFESSIONAL ENGINEER

LOUIS BERGER US
A WSP COMPANY
55 CAPITAL BOULEVARD
ROCKY HILL, CT 06067

PROJECT TITLE:
REHABILITATION OF BRIDGE NO. 04180- I-84 WB OVER HOUSATONIC RIVER

TOWN: **NEWTOWN/SOUTHBURY**

DRAWING TITLE: **ABUTMENT DETAILS - 1**

PROJECT NO. **96-201**
DRAWING NO. **S-19**
SHEET NO. **04.01.19.A1**

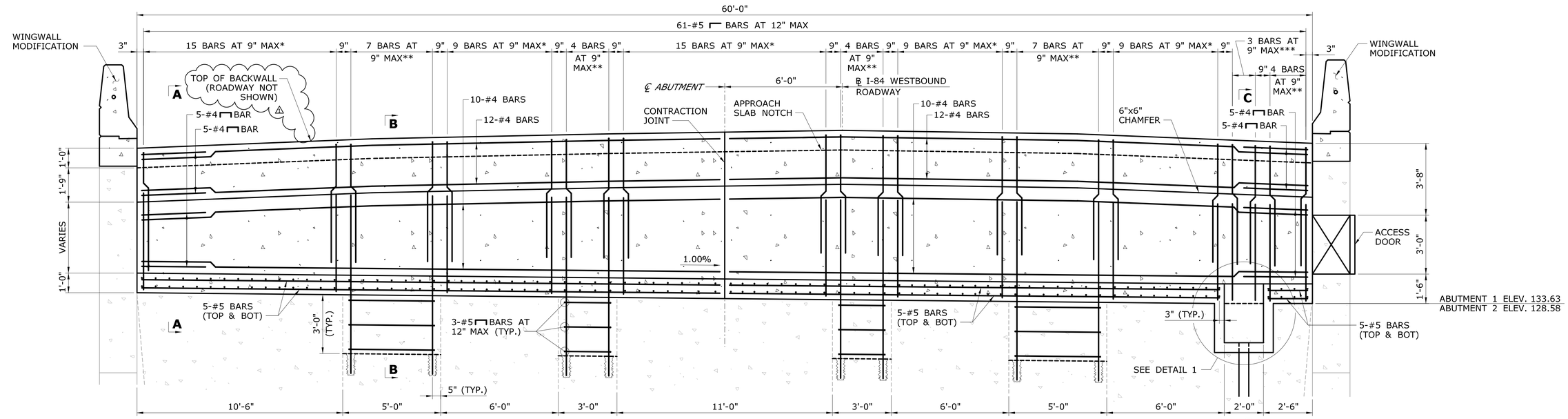

ELEVATION AT CLEANOUT STRUCTURE

ABUTMENT 2 SHOWN, ABUTMENT 1 SIMILAR

SCALE: 3/8 = 1'-0"

* SET INCLUDES (3) #7 BARS, #7 BAR, #7 STR. BAR, & #5 STR. BAR (SEE SECTION A-A)

** SET INCLUDES (2) #7 BARS, (2) #7 BARS, #7 BAR, #7 STR. BAR, & #5 STR. BAR (SEE SECTION B-B)

***SET INCLUDES #7 BARS, #7 BAR, #7 BAR, #7 BAR, #7 STR. BAR, & #5 STR. BAR (SEE SECTION C-C)

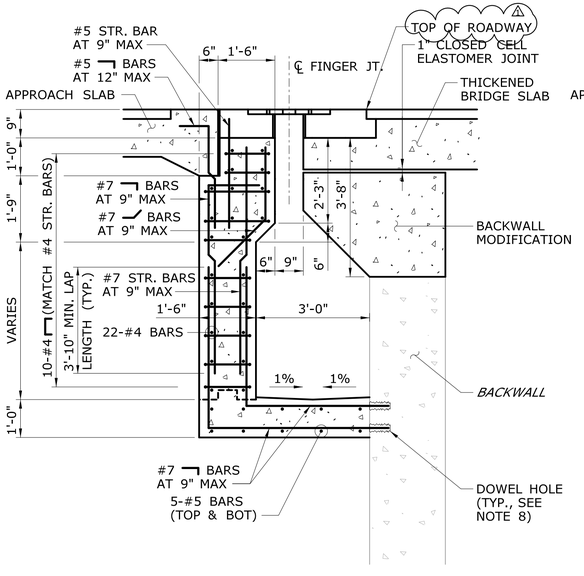

SECTION A-A

SCALE: 1/2 = 1'-0"

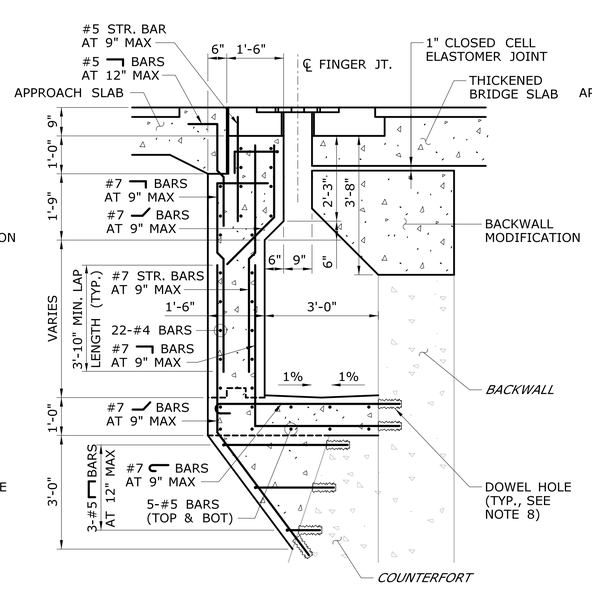

SECTION B-B

SCALE: 1/2 = 1'-0"

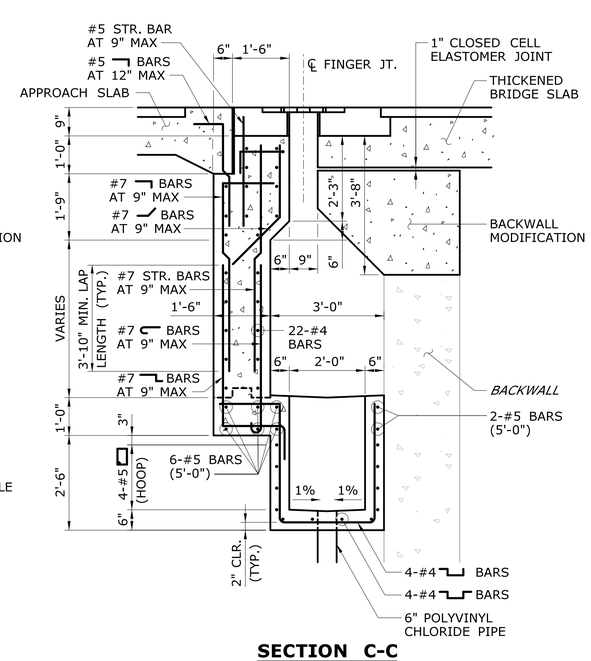

SECTION C-C

SCALE: 1/2 = 1'-0"

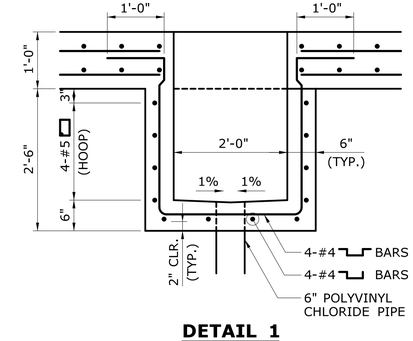

DETAIL 1

SCALE: 3/4 = 1'-0"

REFERENCES

1. FOR GENERAL PLAN, SEE DWG. NO. S-02.
2. FOR GENERAL NOTES, SEE DWG. NO. S-03.
3. FOR ABUTMENT DEMOLITION LIMITS, SEE DWG. NO. S-06 THROUGH NO. S-09.
4. FOR ABUTMENT MODIFICATION PLANS AND ELEVATIONS, SEE DWG. NO. S-17 AND NO. S-18.
5. FOR DISC BEARING DETAILS, SEE DWG. NO S-35.
6. FOR FINGER JOINT DETAILS, SEE DWG. NO S-39.
7. FOR REINFORCEMENT DOWEL/LAP LENGTHS TABLE, SEE DWG. NO. S-19.
8. PROVIDE AN APPROVED CHEMICAL ANCHOR FOR THE CLEANOUT STRUCTURE REINFORCEMENT DOWELED INTO THE EXISTING BACKWALL. THE DOWEL HOLE DIAMETER SHOULD BE SET PER THE RECOMMENDATION OF THE ADHESIVE MANUFACTURER.
9. APPLY DAMPPROOFING COATING TO ALL SURFACES ON THE ~~INSIDE~~ OUTSIDE OF THE CLEANOUT STRUCTURE.

ADDENDUM NO. 1

REV.	DATE	REVISION DESCRIPTION	SHEET NO.
1	02/07/2020	MISCELLANEOUS CALLOUT REVISIONS	04.02.20.A1

THE INFORMATION, INCLUDING ESTIMATED QUANTITIES OF WORK, SHOWN ON THESE SHEETS IS BASED ON LIMITED INVESTIGATIONS BY THE STATE AND IS IN NO WAY WARRANTED TO INDICATE THE CONDITIONS OF ACTUAL QUANTITIES OF WORK WHICH WILL BE REQUIRED.

Plotted Date: 2/14/2020

DESIGNER/DRAFTER: GMP/MWQ
CHECKED BY: WSC
SCALE AS NOTED

STATE OF CONNECTICUT
DEPARTMENT OF TRANSPORTATION

Filename: ...\SB_MSTL_0096_0201_ABUTMENT DETAIL 2-WB.dgn

SIGNATURE/BLOCK: LOUIS BERGER US A WSP COMPANY 55 CAPITAL BOULEVARD ROCKY HILL, CT 06067

PROJECT TITLE: REHABILITATION OF BRIDGE NO. 04180- I-84 WB OVER HOUSATONIC RIVER

TOWN: NEWTOWN/SOUTHBURY

DRAWING TITLE: ABUTMENT DETAILS - 2

PROJECT NO. 96-201

DRAWING NO. S-20

SHEET NO. 04.01.20.A1

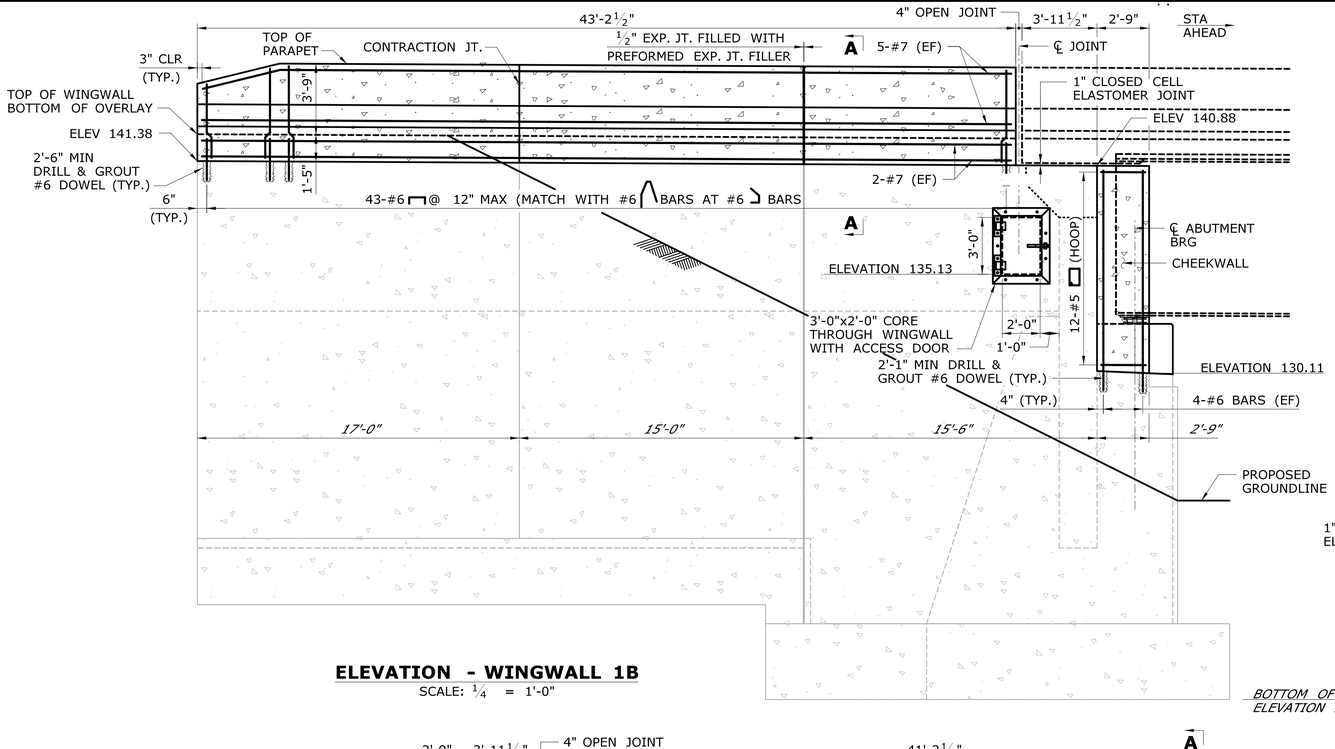

ELEVATION - WINGWALL 1B

SCALE: ¼ = 1'-0"

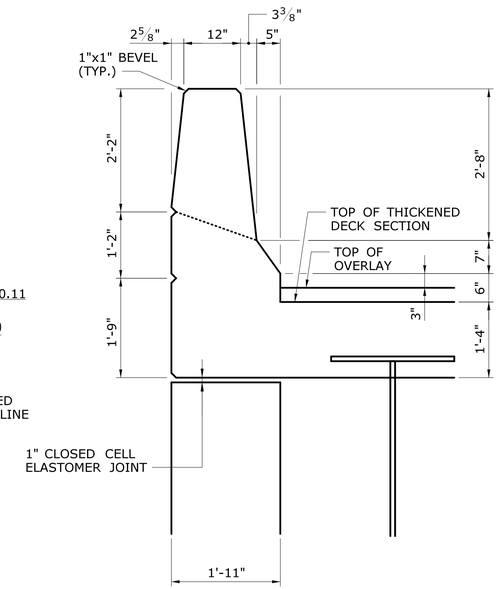

CHEEKWALL SECTION

SCALE: ¾ = 1'-0"

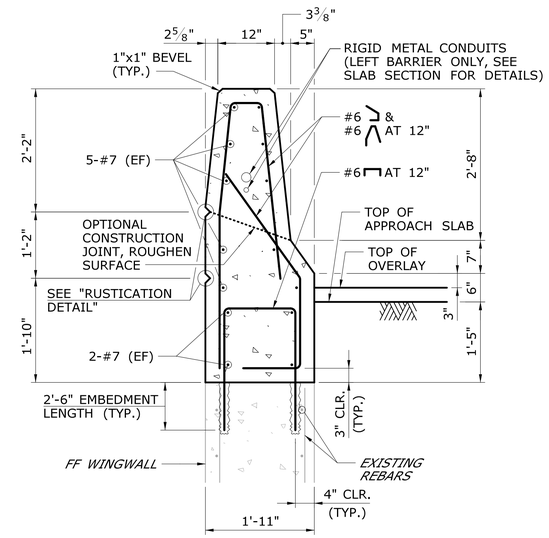

SECTION A-A

SCALE: ¾ = 1'-0"

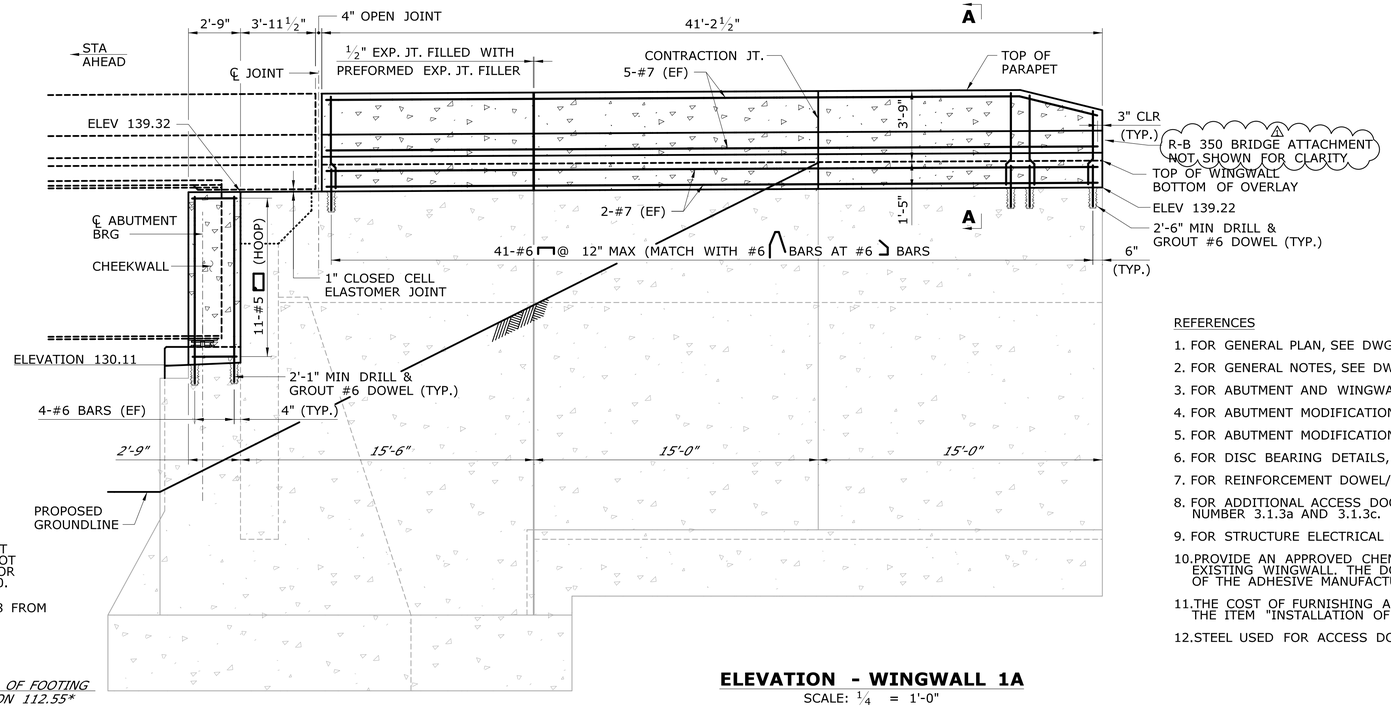

NOTE THAT FINGER JOINT CLEANOUT STRUCTURE NOT SHOWN FOR CLARITY. FOR DETAILS, SEE SHEET S-20.

* CONVERTED TO NAVD 88 FROM AS-BUILT INFORMATION

ELEVATION - WINGWALL 1A

SCALE: ¼ = 1'-0"

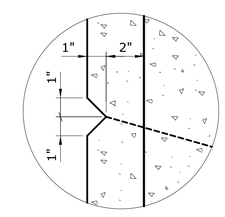

RUSTICATION DETAIL

SCALE: 3" = 1'-0"

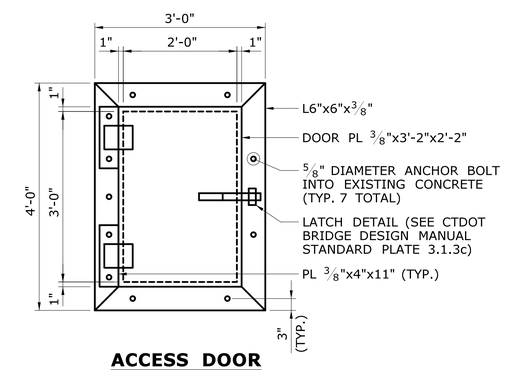

ACCESS DOOR

SCALE: ¾ = 1'-0"

REFERENCES

1. FOR GENERAL PLAN, SEE DWG. NO. S-02.
2. FOR GENERAL NOTES, SEE DWG. NO. S-03.
3. FOR ABUTMENT AND WINGWALL DEMOLITION LIMITS, SEE DWG. NO. S-06 THROUGH NO. S-09.
4. FOR ABUTMENT MODIFICATION PLAN AND ELEVATION, SEE DWG. NO. S-17.
5. FOR ABUTMENT MODIFICATION SECTIONS, SEE DWG. NO. S-19.
6. FOR DISC BEARING DETAILS, SEE DWG. NO. S-35.
7. FOR REINFORCEMENT DOWEL/LAP LENGTHS TABLE, SEE DWG. NO. S-19.
8. FOR ADDITIONAL ACCESS DOOR DETAILS, SEE CTDOT BRIDGE DESIGN MANUAL STANDARD PLATE NUMBER 3.1.3a AND 3.1.3c.
9. FOR STRUCTURE ELECTRICAL DETAILS, SEE DWG. NO. S-44 AND S-45 (WINGWALL 1A ONLY).
10. PROVIDE AN APPROVED CHEMICAL ANCHOR FOR THE ACCESS DOOR BOLTS DOWELED INTO THE EXISTING WINGWALL. THE DOWEL HOLE DIAMETER SHOULD BE SET PER THE RECOMMENDATION OF THE ADHESIVE MANUFACTURER.
11. THE COST OF FURNISHING AND INSTALLATION OF THE ACCESS DOOR SHALL BE INCLUDED IN THE ITEM "INSTALLATION OF FINGER JOINTS".
12. STEEL USED FOR ACCESS DOOR, INCLUDING HARDWARE, SHALL BE GALVANIZED.

ADDENDUM NO. 1

REV.	DATE	REVISION DESCRIPTION	SHEET NO.
1	1/16/2020	DETAILING REVISIONS	04.01.21.A1

THE INFORMATION, INCLUDING ESTIMATED QUANTITIES OF WORK, SHOWN ON THESE SHEETS IS BASED ON LIMITED INVESTIGATIONS BY THE STATE AND IS IN NO WAY WARRANTED TO INDICATE THE CONDITIONS OF ACTUAL QUANTITIES OF WORK WHICH WILL BE REQUIRED.

Plotted Date: 2/10/2020

DESIGNER/DRAFTER: GMP/MWQ
CHECKED BY: WSC
SCALE AS NOTED

STATE OF CONNECTICUT
DEPARTMENT OF TRANSPORTATION

Filename: ...\SB_MSTL_0096_0201_WINGWALL 1-WB.dgn

SIGNATURE/BLOCK: STATE OF CONNECTICUT THOMAS A HARLEY 001480 LICENSED PROFESSIONAL ENGINEER

LOUIS BERGER US
A WSP COMPANY
55 CAPITAL BOULEVARD
ROCKY HILL, CT 06067

PROJECT TITLE:
REHABILITATION OF BRIDGE NO. 04180- I-84 WB OVER HOUSATONIC RIVER

TOWN: **NEWTOWN/SOUTHBURY**

DRAWING TITLE: **ABUTMENT 1 WINGWALL ELEVATIONS**

PROJECT NO. **96-201**
DRAWING NO. **S-21**
SHEET NO. **04.01.21.A1**

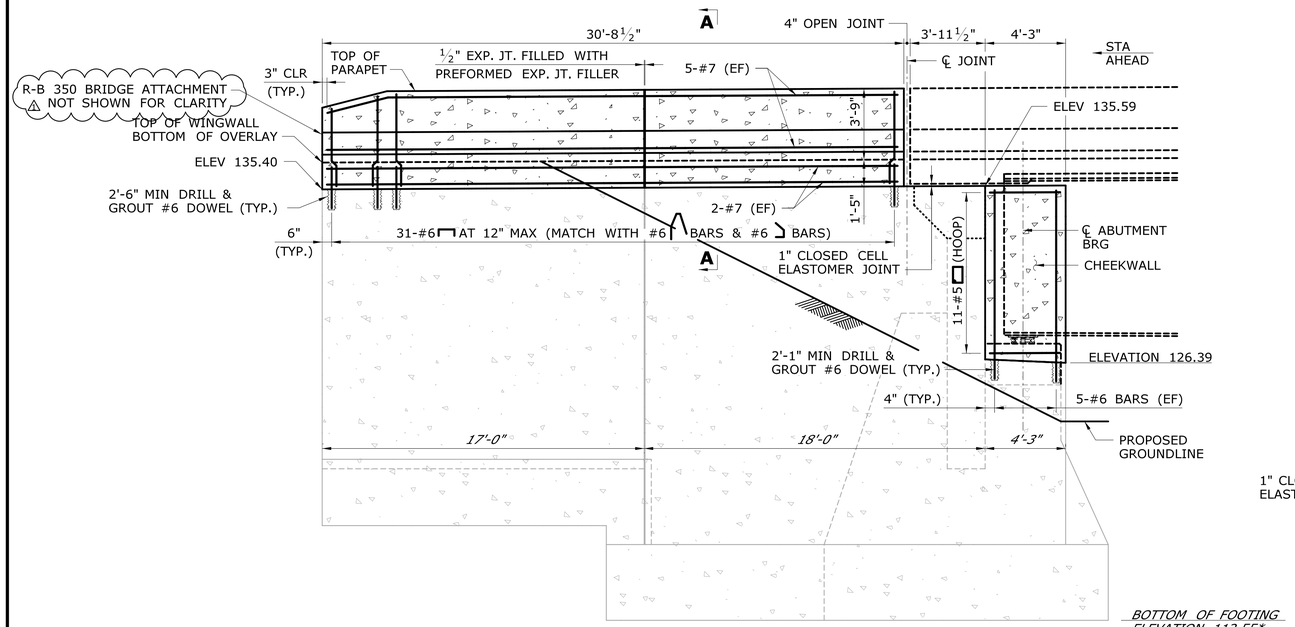

ELEVATION - WINGWALL 2A

SCALE: ¼ = 1'-0"

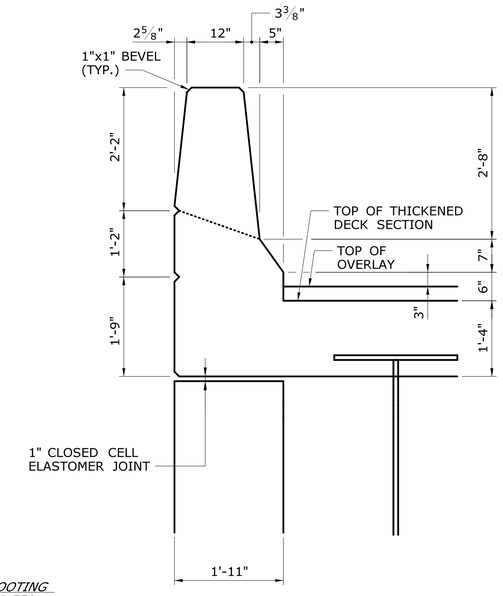

CHEEKWALL SECTION

SCALE: ¾ = 1'-0"

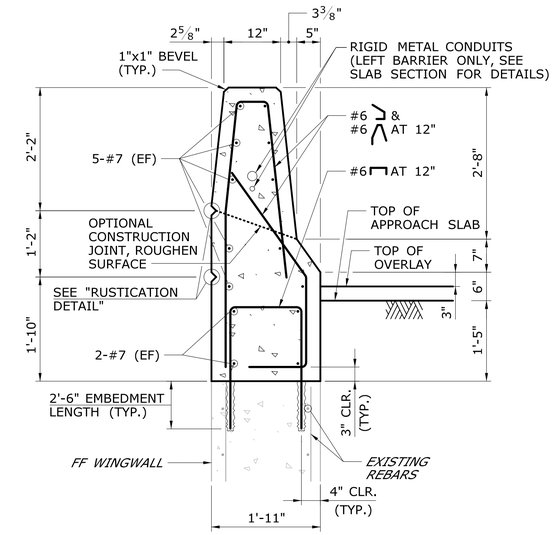

SECTION A-A

SCALE: ¾ = 1'-0"

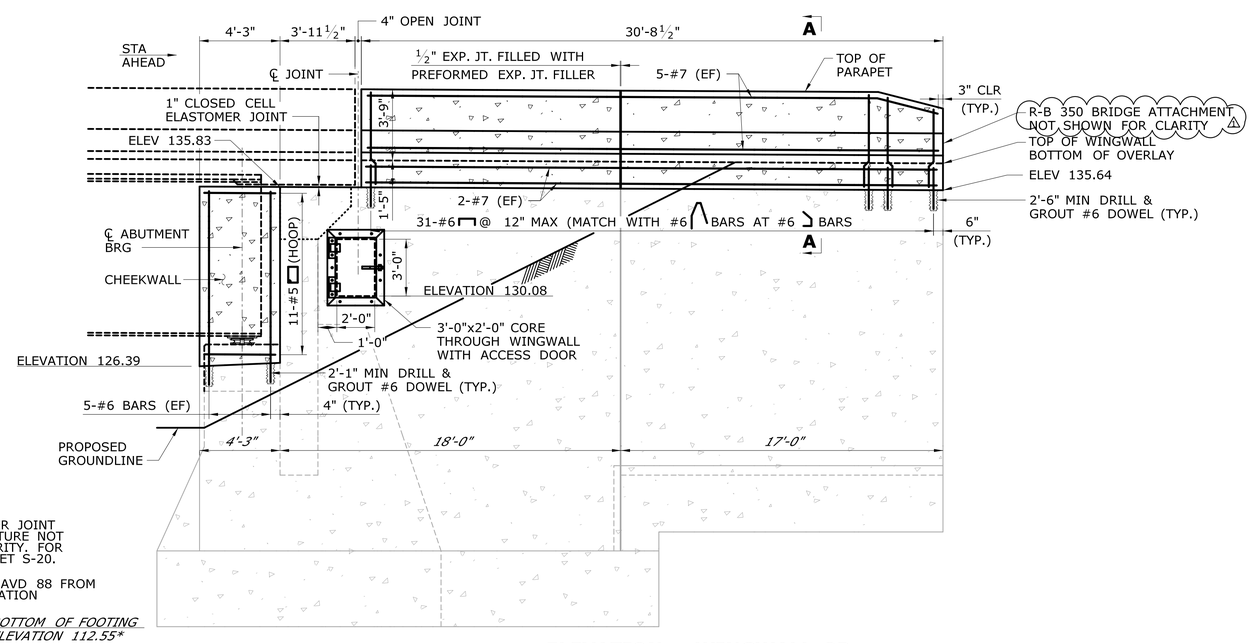

NOTE THAT FINGER JOINT CLEANOUT STRUCTURE NOT SHOWN FOR CLARITY. FOR DETAILS, SEE SHEET S-20.

* CONVERTED TO NAVD 88 FROM AS-BUILT INFORMATION

ELEVATION - WINGWALL 2B

SCALE: ¼ = 1'-0"

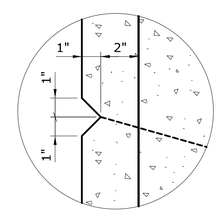

RUSTICATION DETAIL

SCALE: 3" = 1'-0"

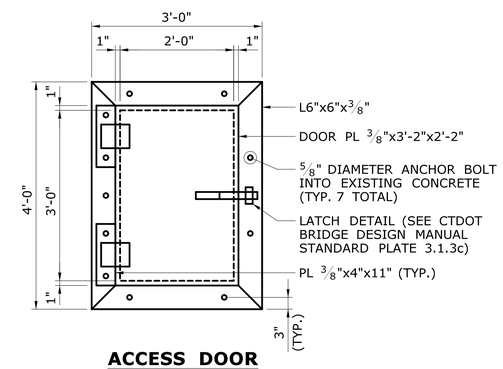

ACCESS DOOR

SCALE: ¾ = 1'-0"

REFERENCES

1. FOR GENERAL PLAN, SEE DWG. NO. S-02.
2. FOR GENERAL NOTES, SEE DWG. NO. S-03.
3. FOR ABUTMENT AND WINGWALL DEMOLITION LIMITS, SEE DWG. NO. S-06 THROUGH NO. S-09.
4. FOR ABUTMENT MODIFICATION PLAN AND ELEVATION, SEE DWG. NO. S-18.
5. FOR ABUTMENT MODIFICATION SECTIONS, SEE DWG. NO. S-19.
6. FOR DISC BEARING DETAILS, SEE DWG. NO S-35.
7. FOR REINFORCEMENT DOWEL/LAP LENGTHS TABLE, SEE DWG. NO. S-19.
8. FOR ADDITIONAL ACCESS DOOR DETAILS, SEE CTDOT BRIDGE DESIGN MANUAL STANDARD PLATE NUMBER 3.1.3a AND 3.1.3c.
9. FOR STRUCTURE ELECTRICAL DETAILS, SEE DWG. NO. S-44 AND S-45 (WINGWALL 2A ONLY).
10. PROVIDE AN APPROVED CHEMICAL ANCHOR FOR THE ACCESS DOOR BOLTS DOWELED INTO THE EXISTING WINGWALL. THE DOWEL HOLE DIAMETER SHOULD BE SET PER THE RECOMMENDATION OF THE ADHESIVE MANUFACTURER.
11. THE COST OF FURNISHING AND INSTALLATION OF THE ACCESS DOOR SHALL BE INCLUDED IN THE ITEM "INSTALLATION OF FINGER JOINTS".
12. STEEL USED FOR ACCESS DOOR, INCLUDING HARDWARE, SHALL BE GALVANIZED.

ADDENDUM NO. 1

REV.	DATE	REVISION DESCRIPTION	SHEET NO.
1	1/16/2020	DETAILING REVISIONS	04.01.22.A1

THE INFORMATION, INCLUDING ESTIMATED QUANTITIES OF WORK, SHOWN ON THESE SHEETS IS BASED ON LIMITED INVESTIGATIONS BY THE STATE AND IS IN NO WAY WARRANTED TO INDICATE THE CONDITIONS OF ACTUAL QUANTITIES OF WORK WHICH WILL BE REQUIRED.

Plotted Date: 2/10/2020

DESIGNER/DRAFTER: GMP/MWQ
CHECKED BY: WSC
SCALE AS NOTED

STATE OF CONNECTICUT
DEPARTMENT OF TRANSPORTATION

Filename: ...\SB_MSTL_0096_0201_WINGWALL 2-WB.dgn

SIGNATURE/BLOCK: STATE OF CONNECTICUT THOMAS A. HARLEY LICENSED PROFESSIONAL ENGINEER 0014890

LOUIS BERGER US
A WSP COMPANY
55 CAPITAL BOULEVARD
ROCKY HILL, CT 06067

PROJECT TITLE: REHABILITATION OF BRIDGE NO. 04180- I-84 WB OVER HOUSATONIC RIVER

TOWN: NEWTOWN/SOUTHBURY

DRAWING TITLE: ABUTMENT 2 WINGWALL ELEVATIONS

PROJECT NO. 96-201
DRAWING NO. S-22
SHEET NO. 04.01.22.A1

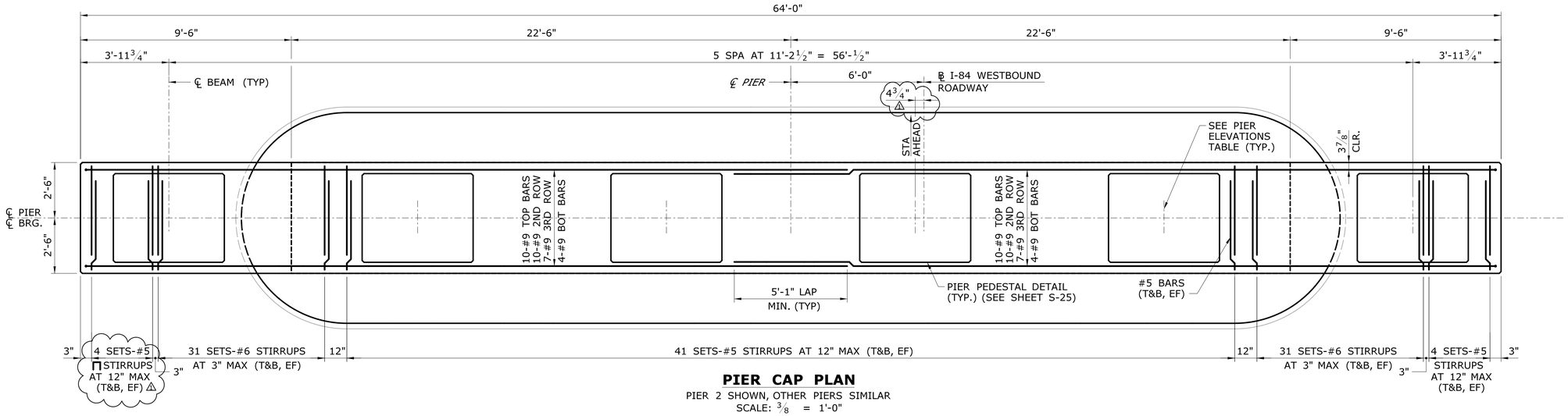

PIER CAP PLAN

PIER 2 SHOWN, OTHER PIERS SIMILAR
SCALE: ⅜ = 1'-0"

PIER ELEVATIONS

	PIER 1	PIER 2	PIER 3
BEAM 1	130.39	129.09	128.31
BEAM 2	130.81	129.52	128.74
BEAM 3	131.04	129.74	128.96
BEAM 4	131.20	129.91	129.13
BEAM 5	131.25	129.75	128.97
BEAM 6	130.86	129.33	128.55
CAP	129.39	128.09	127.31

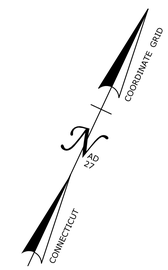

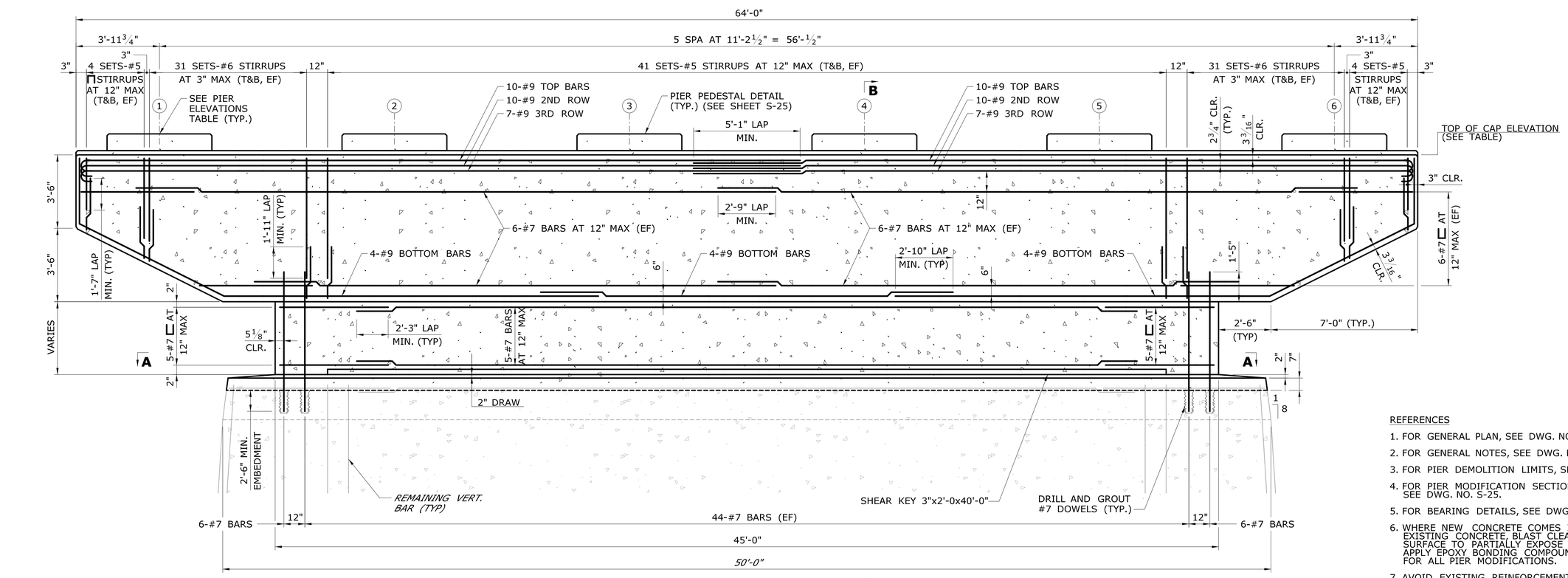

PIER ELEVATION

SCALE: ⅜ = 1'-0"

REFERENCES

1. FOR GENERAL PLAN, SEE DWG. NO. S-02.
2. FOR GENERAL NOTES, SEE DWG. NO. S-03.
3. FOR PIER DEMOLITION LIMITS, SEE DWG. NO. S-05.
4. FOR PIER MODIFICATION SECTION A-A AND SECTION B-B, SEE DWG. NO. S-25.
5. FOR BEARING DETAILS, SEE DWG. NO. S-34 AND NO. S-35.
6. WHERE NEW CONCRETE COMES INTO CONTACT WITH EXISTING CONCRETE, BLAST CLEAN EXISTING CONCRETE SURFACE TO PARTIALLY EXPOSE AGGREGATE 1/4" MIN AND APPLY EPOXY BONDING COMPOUND TO THE EXISTING PIERS FOR ALL PIER MODIFICATIONS.
7. AVOID EXISTING REINFORCEMENT WHEN DRILLING DOWEL HOLES.

ADDENDUM NO. 1

REV.	DATE	REVISION DESCRIPTION	SHEET NO.
1	12/6/2019	DETAILING REVISIONS	04.01.24.A1

THE INFORMATION, INCLUDING ESTIMATED QUANTITIES OF WORK, SHOWN ON THESE SHEETS IS BASED ON LIMITED INVESTIGATIONS BY THE STATE AND IS IN NO WAY WARRANTED TO INDICATE THE CONDITIONS OF ACTUAL QUANTITIES OF WORK WHICH WILL BE REQUIRED.

Plotted Date: 2/10/2020

DESIGNER/DRAFTER: GMP/MWQ
CHECKED BY: WSC
SCALE AS NOTED

STATE OF CONNECTICUT
DEPARTMENT OF TRANSPORTATION

Filename: ...\SB_MSTL_0096_0201_PIER-WB.dgn

SIGNATURE/BLOCK: STATE OF CONNECTICUT — LOUIS A. BERGER — LICENSED PROFESSIONAL ENGINEER 0014890

LOUIS BERGER US
A WSP COMPANY
55 CAPITAL BOULEVARD
ROCKY HILL, CT 06067

PROJECT TITLE:
REHABILITATION OF BRIDGE NO. 04180- I-84 WB OVER HOUSATONIC RIVER

TOWN: **NEWTOWN/SOUTHBURY**

DRAWING TITLE: **PIER PLAN & ELEVATION**

PROJECT NO. **96-201**
DRAWING NO. **S-24**
SHEET NO. **04.01.24.A1**

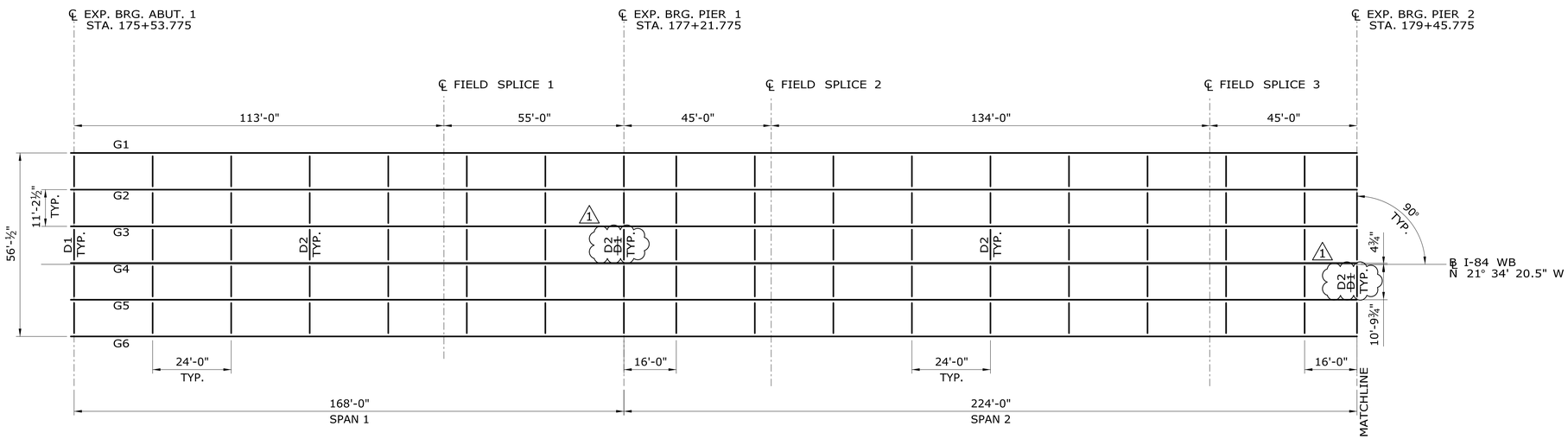

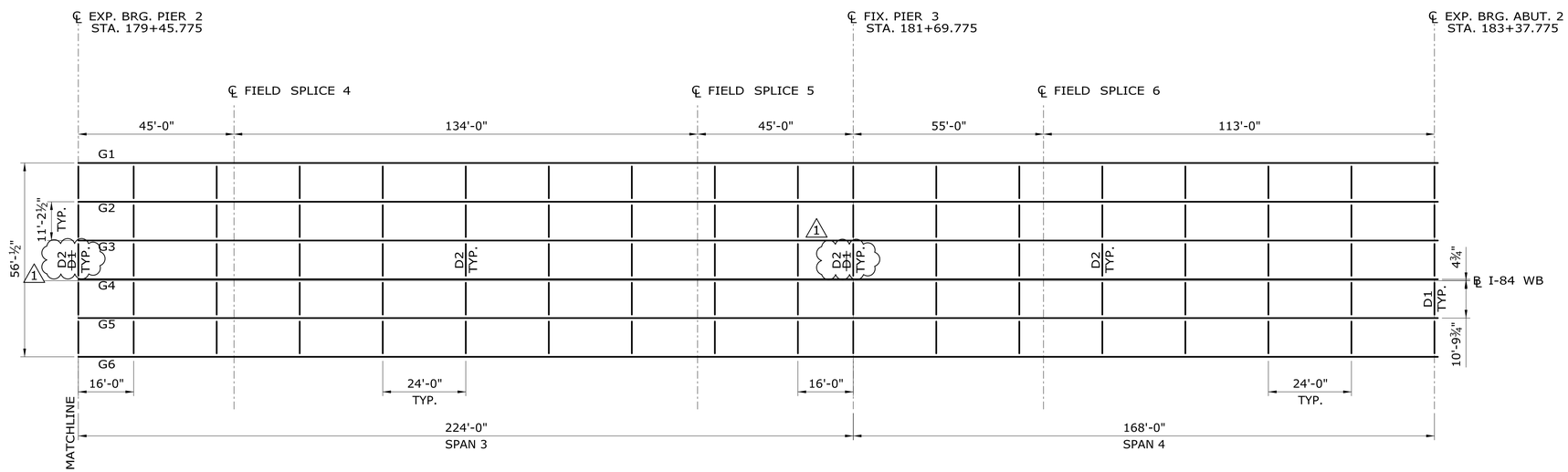

FRAMING PLAN

SCALE: ⅛" = 1'-0"

STRUCTURAL STEEL NOTES

1. STRUCTURAL STEEL (LOW ALLOY) SHALL CONFORM TO AASHTO M270, GRADE 50 WT2.
2. WELDING DETAILS, PROCEDURES AND TESTING METHODS SHALL CONFORM TO THE ANSI/AASHTO/AWS D1.5M/D1.5:2015 BRIDGE WELDING CODE WITH INTERIM REVISIONS, UNLESS OTHERWISE NOTED.
3. BOLTED FIELD SPLICES, OTHER THAN THOSE INDICATED ON THE PLANS, WILL NOT BE ALLOWED EXCEPT WITH THE WRITTEN PERMISSION OF THE ENGINEER PRIOR TO THE SUBMISSION OF SHOP DRAWINGS. IF ALLOWED, THESE SPLICES SHALL BE DESIGNED BY THE CONTRACTOR AND APPROVED BY THE ENGINEER. THE COST OF THESE SPLICES, INCLUDING THE COST OF THE DESIGN, SHALL BE AT NO EXTRA EXPENSE TO THE STATE. WELDED FIELD SPLICES WILL NOT BE ALLOWED.
4. ALL WEB TO FLANGE, WEB TO BEARING STIFFENER AND BEARING STIFFENER TO FLANGE FILLET WELDS SHALL BE INSPECTED BY THE MAGNETIC PARTICLE METHOD.
5. MULTIPLE PASS WELDS INSPECTED BY THE MAGNETIC PARTICLE METHOD SHALL HAVE EACH PASS OR LAYER INSPECTED AND ACCEPTED BEFORE PROCEEDING TO THE NEXT PASS OR LAYER, AS DETERMINED BY THE ENGINEER.
6. SHOP FLANGE SPLICES SHALL BE LOCATED A MINIMUM OF 6 INCHES FROM WEB SPLICES.
7. FLANGE OR WEB SPLICES SHALL BE LOCATED A MINIMUM OF 6 INCHES FROM STIFFENERS AND CONNECTION PLATES.
8. BEARING STIFFENERS AND THE ENDS OF GIRDERS SHALL BE VERTICAL AFTER THE APPLICATION OF FULL DEAD LOADS.
9. THE STRUCTURAL STEEL FABRICATORS SHALL BE CERTIFIED UNDER THE AISC CERTIFICATION PROGRAM CATEGORY BRIDGE FABRICATOR INTERMEDIATE (IBR).
10. THE CONTRACTOR SHALL TAKE THE PROPER PRECAUTIONS TO ENSURE THE STABILITY OF ALL STRUCTURAL ELEMENTS UNTIL THE TOTAL STRUCTURE IS IN BEING.

HIGH STRENGTH BOLT NOTES

1. ALL BOLTED CONNECTIONS SHALL BE "SLIP CRITICAL" CONNECTIONS WITH CLASS 'B' SURFACE CONDITIONS UNLESS OTHERWISE NOTED.
2. ALL HIGH STRENGTH BOLTS SHALL BE ⅞" ∅ ASTM F3125 GRADE A325 TYPE 3 BOLTS IN STANDARD HOLES UNLESS OTHERWISE NOTED.

ADDENDUM NO. 1

REV.	DATE	REVISION DESCRIPTION	SHEET NO.
1	1/27/2020	REVISED DAIPHRAGMS	04.02.28A1

THE INFORMATION, INCLUDING ESTIMATED QUANTITIES OF WORK, SHOWN ON THESE SHEETS IS BASED ON LIMITED INVESTIGATIONS BY THE STATE AND IS IN NO WAY WARRANTED TO INDICATE THE CONDITIONS OF ACTUAL QUANTITIES OF WORK WHICH WILL BE REQUIRED.

Plotted Date: 1/29/2020

DESIGNER/DRAFTER: CS
CHECKED BY: BY
SCALE IN FEET 0 40 80
SCALE 1"=40'

STATE OF CONNECTICUT
DEPARTMENT OF TRANSPORTATION

Filename: ...\SB_MSTL_0096_0201_FRAMING PLAN_WB.dgn

SIGNATURE/BLOCK: STATE OF CONNECTICUT THOMAS A. HARLEY 0014890 LICENSED PROFESSIONAL ENGINEER

LOUIS BERGER US
A WSP COMPANY
55 CAPITAL BOULEVARD
ROCKY HILL, CT 06067

PROJECT TITLE:
REHABILITATION OF BRIDGE NO. 04180 - I-84 WB OVER HOUSATONIC RIVER

TOWN: **NEWTOWN/SOUTHBURY**

DRAWING TITLE: **FRAMING PLAN**

PROJECT NO. **96-201**
DRAWING NO. **S-28**
SHEET NO. **04.01.28.A1**

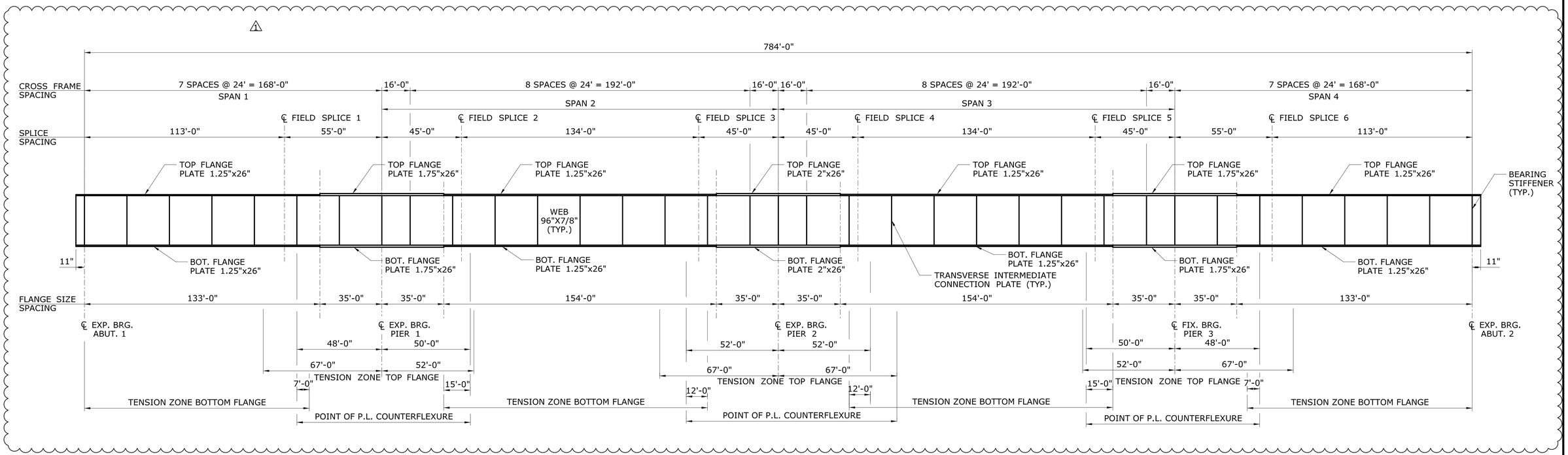

GIRDER ELEVATION (G1 TO G6)

N.T.S.

GIRDER TABLE								
GIRDER DESIGNATION	GIRDER SIZE				INTERMEDIATE CONNECTION PLATES (IN.)	BEARING STIFFENER (IN.)	MAX. SHEAR STUD SPACING (IN.)	SHEAR STUD DIA.
	LENGTH	TOP FLANGE	WEB	BOT. FLANGE				
G1 & G6	785'-10"	VARIES	7/8" x 96"	VARIES	14" x 1"	14" x 1"	10"	7/8"
G2 - G5	785'-10"	VARIES	7/8" x 96"	VARIES	14" x 1"	14" x 1"	12"	7/8"

1

1 NOTES

1. NO ATTACHMENT SHALL BE FILLET WELDED, PLUG WELDED, NOR TACK WELDED TO THE TENSION ZONE OF ~~OR REVERSAL~~ FLANGES.
2. FOR STRUCTURAL STEEL NOTES, SEE DWG. NO. S-28.
3. FOR GIRDER DETAILS, SEE DWG. NO. S-30.
4. FOR BOLTED FIELD SPLICE DETAILS, SEE DWG. NO. S-32.

ADDENDUM NO. 1

REV.	DATE	REVISION DESCRIPTION	SHEET NO.
1	1/27/2020	ADD STIFFENER WIDTHS AND TENSION ZONES	04.01.29.A1

THE INFORMATION, INCLUDING ESTIMATED QUANTITIES OF WORK, SHOWN ON THESE SHEETS IS BASED ON LIMITED INVESTIGATIONS BY THE STATE AND IS IN NO WAY WARRANTED TO INDICATE THE CONDITIONS OF ACTUAL QUANTITIES OF WORK WHICH WILL BE REQUIRED.

Plotted Date: 1/27/2020

DESIGNER/DRAFTER: CS

CHECKED BY: BY

STATE OF CONNECTICUT
DEPARTMENT OF TRANSPORTATION

Filename: ...\SB_MSTL_0096_0201_GIRDER ELEV & SECT_WB.dgn

SIGNATURE/BLOCK: STATE OF CONNECTICUT THOMAS A HARLEY 0014890 LICENSED PROFESSIONAL ENGINEER

LOUIS BERGER US
A WSP COMPANY
55 CAPITAL BOULEVARD
ROCKY HILL, CT 06067

PROJECT TITLE:
REHABILITATION OF BRIDGE NO 04180 - I-84 WB OVER HOUSATONIC RIVER

TOWN: **NEWTOWN/SOUTHBURY**

DRAWING TITLE: **GIRDER ELEVATION**

PROJECT NO. **96-201**

DRAWING NO. **S-29**

SHEET NO. **04.01.29.A1**

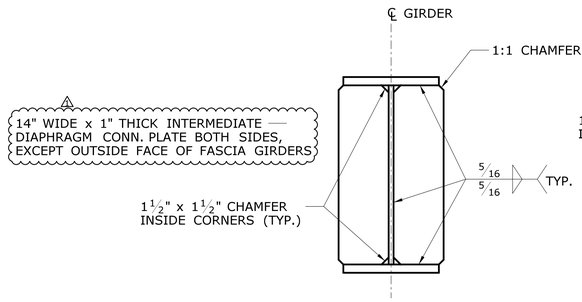

TRANSVERSE INTERMEDIATE CONNECTION PLATE

SCALE: N.T.S.

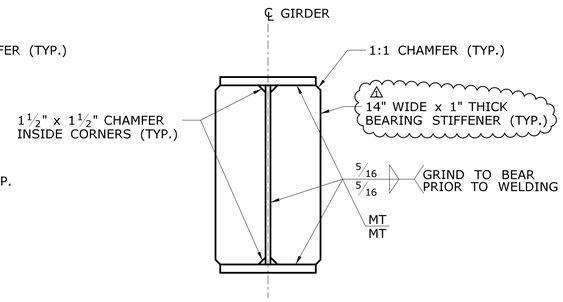

BEARING STIFFENER

SCALE: N.T.S.

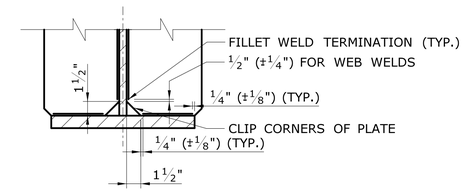

WELD TERMINATION DETAIL

SCALE: N.T.S.

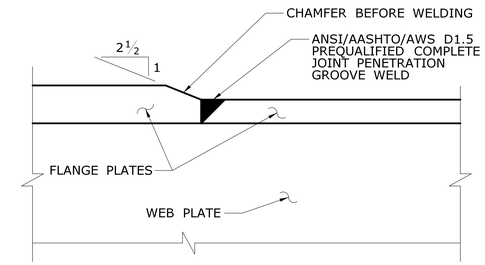

(TOP FLANGE SHOWN, BOTTOM FLANGE SIMILAR)

FLANGE THICKNESS TRANSITION DETAIL

SCALE: N.T.S.

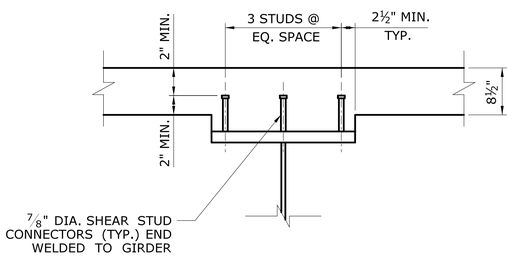

SHEAR CONNECTOR DETAIL

SCALE: N.T.S.

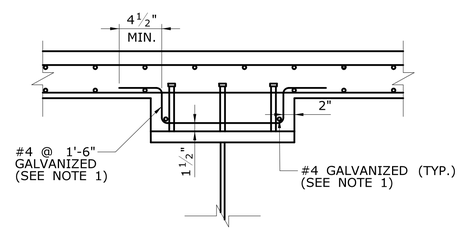

HAUNCH REINFORCEMENT DETAIL

SCALE: N.T.S.

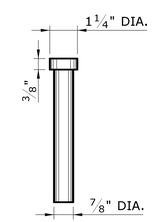

STUD DETAIL

SCALE: N.T.S.

NOTES

1. HAUNCH REINFORCEMENT SHOWN IS FOR HAUNCH DEPTH OF 4" TO 6". REINFORCEMENT IS NOT REQUIRED FOR HAUNCH DEPTH LESS THAN 4".
2. FOR STRUCTURAL STEEL NOTES, SEE DWG. NO. S-28.
3. CONTRACTOR SHALL USE "TRANSVERSE INTERMEDIATE DIAPHRAGM CONNECTION PLATE" DETAIL FOR DOWNSPOUT SUPPORT (SEE DWG. NO. S-41).

ADDENDUM NO. 1

REV.	DATE	REVISION DESCRIPTION	SHEET NO.
1	1/10/2020	ADD STIFFENER WIDTHS	04.01.30.A1

THE INFORMATION, INCLUDING ESTIMATED QUANTITIES OF WORK, SHOWN ON THESE SHEETS IS BASED ON LIMITED INVESTIGATIONS BY THE STATE AND IS IN NO WAY WARRANTED TO INDICATE THE CONDITIONS OF ACTUAL QUANTITIES OF WORK WHICH WILL BE REQUIRED.

Plotted Date: 2/12/2020

DESIGNER/DRAFTER: CS

CHECKED BY: BY

STATE OF CONNECTICUT
DEPARTMENT OF TRANSPORTATION

Filename: ...\SB_MSTL_0096_0201_GIRDER_DETAILS_WB.dgn

SIGNATURE/BLOCK: STATE OF CONNECTICUT THOMAS A. HARLEY 001480 LICENSED PROFESSIONAL ENGINEER

LOUIS BERGER US
A WSP COMPANY
55 CAPITAL BOULEVARD
ROCKY HILL, CT 06067

PROJECT TITLE:
REHABILITATION OF BRIDGE NO. 04180 - I-84 WB OVER HOUSATONIC RIVER

TOWN: **NEWTOWN/SOUTHBURY**

DRAWING TITLE: **GIRDER DETAILS**

PROJECT NO. **96-201**

DRAWING NO. **S-30**

SHEET NO. **04.01.30.A1**

CAMBER ORDINATES (IN)

	GIRDER 1						GIRDER 2						GIRDER 3					
	STEEL DL	OTHER DL	SDL	TOTAL DL	VCO	TOTAL CAMBER	STEEL DL	OTHER DL	SDL	TOTAL DL	VCO	TOTAL CAMBER	STEEL DL	OTHER DL	SDL	TOTAL DL	VCO	TOTAL CAMBER
AB1	0.00	0.00	0.00	0.00	0.00	0.00	0.00	0.00	0.00	0.00	0.00	0.00	0.00	0.00	0.00	0.00	0.00	0.00
1 L / 17	0.12	0.26	0.13	0.51	0.26	0.77	0.12	0.30	0.13	0.55	0.22	0.77	0.12	0.30	0.13	0.55	0.12	0.67
2 L / 17	0.23	0.50	0.26	0.98	0.51	1.49	0.23	0.58	0.26	1.06	0.50	1.56	0.23	0.58	0.26	1.06	0.24	1.31
3 L / 17	0.32	0.71	0.37	1.40	0.77	2.17	0.32	0.82	0.37	1.51	0.74	2.25	0.32	0.82	0.37	1.51	0.37	1.88
4 L / 17	0.40	0.88	0.46	1.73	1.03	2.77	0.40	1.02	0.46	1.88	0.98	2.86	0.40	1.02	0.46	1.88	0.48	2.35
5 L / 17	0.46	1.00	0.52	1.98	1.30	3.27	0.46	1.16	0.52	2.14	1.25	3.39	0.46	1.16	0.52	2.14	0.61	2.75
6 L / 17	0.49	1.07	0.56	2.12	1.56	3.68	0.49	1.24	0.56	2.29	1.46	3.75	0.49	1.24	0.56	2.29	0.72	3.01
7 L / 17	0.50	1.09	0.57	2.16	1.82	3.98	0.50	1.27	0.57	2.34	1.73	4.07	0.50	1.27	0.57	2.34	0.84	3.18
8 L / 17	0.48	1.06	0.55	2.09	2.08	4.18	0.48	1.23	0.55	2.27	1.99	4.26	0.48	1.23	0.55	2.27	0.98	3.24
9 L / 17	0.45	0.98	0.51	1.94	2.34	4.28	0.45	1.14	0.51	2.10	2.23	4.33	0.45	1.14	0.51	2.10	1.08	3.18
10 L / 17	0.39	0.86	0.45	1.70	2.39	4.09	0.39	1.00	0.45	1.84	2.28	4.12	0.39	1.00	0.45	1.84	1.21	3.05
11 L / 17	0.32	0.71	0.37	1.40	2.34	3.74	0.32	0.82	0.37	1.52	2.25	3.77	0.32	0.82	0.37	1.52	1.32	2.83
12 L / 17	0.25	0.54	0.28	1.07	2.23	3.29	0.25	0.63	0.28	1.15	2.14	3.30	0.25	0.63	0.28	1.15	1.35	2.51
13 L / 17	0.17	0.36	0.19	0.72	1.88	2.60	0.17	0.42	0.19	0.78	1.82	2.60	0.17	0.42	0.19	0.78	1.19	1.97
14 L / 17	0.09	0.21	0.11	0.41	1.04	1.45	0.09	0.24	0.11	0.44	0.99	1.43	0.09	0.24	0.11	0.44	0.51	0.95
15 L / 17	0.04	0.08	0.04	0.16	0.69	0.85	0.04	0.09	0.04	0.17	0.67	0.84	0.04	0.09	0.04	0.17	0.34	0.52
16 L / 17	0.01	0.01	0.01	0.03	0.34	0.36	0.01	0.02	0.01	0.03	0.33	0.36	0.01	0.02	0.01	0.03	0.17	0.19
PIER 1	0.00	0.00	0.00	0.00	0.00	0.00	0.00	0.00	0.00	0.00	0.00	0.00	0.00	0.00	0.00	0.00	0.00	0.00
1 L / 22	0.04	0.08	0.04	0.15	0.01	0.17	0.04	0.10	0.05	0.19	0.01	0.20	0.04	0.10	0.05	0.19	0.00	0.19
2 L / 22	0.11	0.23	0.12	0.46	0.02	0.48	0.11	0.27	0.13	0.51	0.03	0.54	0.11	0.27	0.13	0.51	0.02	0.53
3 L / 22	0.20	0.44	0.24	0.88	0.03	0.91	0.20	0.51	0.24	0.96	0.04	1.00	0.20	0.51	0.24	0.96	0.03	0.99
4 L / 22	0.31	0.68	0.36	1.36	0.54	1.90	0.31	0.79	0.36	1.47	0.55	2.02	0.31	0.79	0.36	1.47	0.54	2.01
5 L / 22	0.43	0.93	0.50	1.86	0.56	2.42	0.43	1.08	0.50	2.01	0.56	2.56	0.43	1.08	0.50	2.01	0.56	2.56
6 L / 22	0.54	1.17	0.63	2.34	0.57	2.91	0.54	1.36	0.62	2.52	0.57	3.09	0.54	1.36	0.62	2.52	0.56	3.08
7 L / 22	0.64	1.39	0.74	2.76	0.57	3.34	0.64	1.61	0.74	2.99	0.58	3.57	0.64	1.61	0.74	2.99	0.57	3.56
8 L / 22	0.72	1.56	0.83	3.11	0.59	3.70	0.72	1.82	0.83	3.37	0.60	3.96	0.72	1.82	0.83	3.37	0.59	3.96
9 L / 22	0.78	1.69	0.90	3.37	0.60	3.97	0.78	1.97	0.90	3.65	0.61	4.26	0.78	1.97	0.90	3.65	0.60	4.25
10 L / 22	0.81	1.76	0.94	3.52	0.62	4.13	0.81	2.05	0.94	3.81	0.61	4.42	0.81	2.05	0.94	3.81	0.62	4.42
11 L / 22	0.82	1.78	0.95	3.55	0.63	4.18	0.82	2.07	0.95	3.84	0.63	4.47	0.82	2.07	0.95	3.84	0.62	4.46
12 L / 22	0.80	1.74	0.93	3.46	0.63	4.09	0.80	2.02	0.93	3.75	0.64	4.39	0.80	2.02	0.93	3.75	0.63	4.38
13 L / 22	0.75	1.64	0.87	3.26	0.65	3.91	0.75	1.90	0.87	3.53	0.65	4.18	0.75	1.90	0.87	3.53	0.65	4.18
14 L / 22	0.68	1.48	0.79	2.96	0.66	3.62	0.68	1.73	0.79	3.20	0.67	3.87	0.68	1.73	0.79	3.20	0.66	3.86
15 L / 22	0.59	1.29	0.69	2.57	0.68	3.24	0.59	1.50	0.69	2.78	0.67	3.45	0.59	1.50	0.69	2.78	0.68	3.45
16 L / 22	0.49	1.06	0.57	2.12	0.69	2.80	0.49	1.23	0.57	2.29	0.68	2.97	0.49	1.23	0.57	2.29	0.68	2.97
17 L / 22	0.38	0.81	0.44	1.63	0.69	2.32	0.38	0.95	0.44	1.76	0.69	2.45	0.38	0.95	0.44	1.76	0.69	2.45
18 L / 22	0.26	0.57	0.31	1.14	0.71	1.84	0.26	0.66	0.31	1.23	0.71	1.94	0.26	0.66	0.31	1.23	0.71	1.94
19 L / 22	0.16	0.34	0.19	0.69	-0.03	0.66	0.16	0.40	0.19	0.74	-0.03	0.72	0.16	0.40	0.19	0.74	-0.03	0.71
20 L / 22	0.08	0.16	0.09	0.33	-0.02	0.31	0.08	0.19	0.09	0.35	-0.03	0.33	0.08	0.19	0.09	0.35	-0.02	0.34
21 L / 22	0.02	0.05	0.03	0.10	0.00	0.10	0.02	0.06	0.03	0.12	-0.01	0.10	0.02	0.06	0.03	0.12	-0.01	0.10
PIER 2	0.00	0.00	0.00	0.00	0.00	0.00	0.00	0.00	0.00	0.00	0.00	0.00	0.00	0.00	0.00	0.00	0.00	0.00
1 L / 22	0.02	0.04	0.02	0.07	-0.01	0.06	0.03	0.08	0.04	0.15	-0.01	0.15	0.03	0.08	0.04	0.15	-0.01	0.15
2 L / 22	0.07	0.16	0.08	0.31	-0.02	0.29	0.08	0.20	0.09	0.37	-0.02	0.35	0.08	0.20	0.09	0.37	-0.02	0.35
3 L / 22	0.16	0.34	0.18	0.69	-0.03	0.66	0.16	0.40	0.19	0.75	-0.04	0.71	0.16	0.40	0.19	0.75	-0.03	0.72
4 L / 22	0.26	0.57	0.31	1.14	0.71	1.85	0.26	0.66	0.31	1.23	0.70	1.93	0.26	0.66	0.31	1.23	0.70	1.93
5 L / 22	0.38	0.82	0.44	1.63	0.70	2.34	0.37	0.94	0.44	1.75	0.69	2.45	0.37	0.94	0.44	1.75	0.69	2.45
6 L / 22	0.49	1.06	0.57	2.12	0.68	2.80	0.49	1.23	0.57	2.28	0.68	2.96	0.49	1.23	0.57	2.28	0.68	2.96
7 L / 22	0.59	1.29	0.69	2.57	0.67	3.25	0.59	1.49	0.69	2.77	0.67	3.45	0.59	1.49	0.69	2.77	0.67	3.45
8 L / 22	0.68	1.49	0.79	2.96	0.66	3.63	0.68	1.72	0.79	3.20	0.66	3.86	0.68	1.72	0.79	3.20	0.66	3.86
9 L / 22	0.75	1.64	0.87	3.26	0.66	3.92	0.75	1.90	0.87	3.53	0.64	4.17	0.75	1.90	0.87	3.53	0.66	4.18
10 L / 22	0.80	1.74	0.93	3.46	0.65	4.11	0.80	2.02	0.93	3.75	0.63	4.38	0.80	2.02	0.93	3.75	0.63	4.38
11 L / 22	0.82	1.78	0.95	3.55	0.63	4.17	0.82	2.07	0.95	3.84	0.63	4.47	0.82	2.07	0.95	3.84	0.63	4.47
12 L / 22	0.81	1.76	0.94	3.51	0.62	4.13	0.81	2.06	0.94	3.81	0.62	4.43	0.81	2.06	0.94	3.81	0.62	4.43
13 L / 22	0.78	1.69	0.90	3.37	0.61	3.97	0.78	1.97	0.90	3.65	0.61	4.26	0.78	1.97	0.90	3.65	0.61	4.26
14 L / 22	0.72	1.56	0.83	3.11	0.60	3.71	0.72	1.82	0.83	3.37	0.59	3.96	0.72	1.82	0.83	3.37	0.60	3.97
15 L / 22	0.64	1.38	0.74	2.76	0.59	3.35	0.64	1.61	0.74	2.99	0.58	3.57	0.64	1.61	0.74	2.99	0.58	3.57
16 L / 22	0.54	1.17	0.62	2.33	0.57	2.90	0.54	1.36	0.62	2.52	0.57	3.09	0.54	1.36	0.62	2.52	0.57	3.09
17 L / 22	0.43	0.93	0.50	1.86	0.56	2.42	0.43	1.08	0.50	2.00	0.56	2.56	0.43	1.08	0.50	2.00	0.56	2.56
18 L / 22	0.31	0.68	0.37	1.36	0.55	1.91	0.31	0.79	0.36	1.47	0.55	2.02	0.31	0.79	0.36	1.47	0.55	2.02
19 L / 22	0.20	0.44	0.24	0.89	0.04	0.92	0.20	0.51	0.24	0.95	0.03	0.98	0.20	0.51	0.24	0.95	0.04	0.99
20 L / 22	0.11	0.23	0.13	0.47	0.03	0.50	0.11	0.27	0.13	0.50	0.02	0.52	0.11	0.27	0.13	0.50	0.02	0.52
21 L / 22	0.04	0.08	0.04	0.16	0.01	0.17	0.04	0.10	0.05	0.18	0.01	0.19	0.04	0.10	0.05	0.18	0.01	0.19
PIER 3	0.00	0.00	0.00	0.00	0.00	0.00	0.00	0.00	0.00	0.00	0.00	0.00	0.00	0.00	0.00	0.00	0.00	0.00
1 L / 17	0.00	0.00	0.00	0.01	-0.02	-0.02	0.01	0.01	0.01	0.03	-0.03	-0.01	0.01	0.01	0.01	0.03	-0.03	-0.01
2 L / 17	0.04	0.08	0.04	0.15	-0.06	0.10	0.04	0.09	0.04	0.17	-0.06	0.12	0.04	0.09	0.04	0.17	-0.06	0.12
3 L / 17	0.09	0.21	0.11	0.41	-0.09	0.32	0.09	0.24	0.11	0.44	-0.09	0.35	0.09	0.24	0.11	0.44	-0.09	0.35
4 L / 17	0.17	0.37	0.19	0.73	0.39	1.11	0.17	0.42	0.19	0.78	0.37	1.16	0.17	0.42	0.19	0.78	0.39	1.17
5 L / 17	0.25	0.54	0.28	1.07	0.35	1.42	0.25	0.63	0.28	1.15	0.35	1.51	0.25	0.63	0.28	1.15	0.35	1.51
6 L / 17	0.32	0.71	0.37	1.40	0.33	1.73	0.32	0.82	0.37	1.52	0.32	1.83	0.32	0.82	0.37	1.52	0.33	1.85
7 L / 17	0.39	0.86	0.45	1.70	0.30	1.99	0.39	1.00	0.45	1.84	0.30	2.13	0.39	1.00	0.45	1.84	0.30	2.13
8 L / 17	0.45	0.98	0.51	1.93	0.27	2.21	0.45	1.14	0.51	2.10	0.26	2.36	0.45	1.14	0.51	2.10	0.26	2.36
9 L / 17	0.48	1.05	0.55	2.09	0.24	2.33	0.48	1.23	0.55	2.27	0.24	2.50	0.48	1.23	0.55	2.27	0.24	2.50
10 L / 17	0.50	1.09	0.57	2.15	0.20	2.36	0.50	1.27	0.57	2.34	0.20	2.54	0.50	1.27	0.57	2.34	0.20	2.54
11 L / 17	0.49	1.07	0.56	2.12	0.18	2.30	0.49	1.25	0.56	2.29	0.17	2.47	0.49	1.25	0.56	2.29	0.18	2.48
12 L / 17	0.46	1.00	0.52	1.98	0.15	2.13	0.46	1.16	0.52	2.14	0.15	2.29	0.46	1.16	0.52	2.14	0.15	2.29
13 L / 17	0.40	0.88	0.46	1.74	0.13	1.86	0.40	1.02	0.46	1.88	0.11	1.99	0.40	1.02	0.46	1.88	0.13	2.00
14 L / 17	0.32	0.71	0.37	1.40	0.09	1.49	0.32	0.82	0.37	1.51	0.09	1.60	0.32	0.82	0.37	1.51	0.09	1.60
15 L / 17	0.23	0.50	0.26	0.98	0.07	1.05	0.23	0.58	0.26	1.06	0.06	1.12	0.23	0.58	0.26	1.06	0.06	1.12
16 L / 17	0.11	0.25	0.13	0.50	0.03	0.53	0.12	0.29	0.13	0.54	0.03	0.58	0.12	0.29	0.13	0.54	0.03	0.58
AB2	0.00	0.00	0.00	0.00	0.00	0.00	0.00	0.00	0.00	0.00	0.00	0.00	0.00	0.00	0.00	0.00	0.00	0.00

	GIRDER 4						GIRDER 5						GIRDER 6					
	STEEL DL	OTHER DL	SDL	TOTAL DL	VCO	TOTAL CAMBER	STEEL DL	OTHER DL	SDL	TOTAL DL	VCO	TOTAL CAMBER	STEEL DL	OTHER DL	SDL	TOTAL DL	VCO	TOTAL CAMBER
AB1	0.00	0.00	0.00	0.00	0.00	0.00	0.00	0.00	0.00	0.00	0.00	0.00	0.00	0.00	0.00	0.00	0.00	0.00
1 L / 17	0.12	0.30	0.13	0.55	0.03	0.58	0.12	0.30	0.13	0.55	0.03	0.58	0.12	0.26	0.13	0.51	-0.20	0.30
2 L / 17	0.23	0.58	0.26	1.06	0.07	1.13	0.23	0.58	0.26	1.06	0.09	1.15	0.23	0.50	0.26	0.98	-0.31	0.67
3 L / 17	0.32	0.82	0.37	1.51	0.10	1.61	0.32	0.82	0.37	1.51	0.12	1.63	0.32	0.71	0.37	1.40	-0.47	0.93
4 L / 17	0.40	1.02	0.46	1.88	0.13	2.01	0.40	1.02	0.46	1.88	0.11	1.99	0.40	0.88	0.46	1.73	-0.64	1.10
5 L / 17	0.46	1.16	0.52	2.14	0.16	2.30	0.46	1.16	0.52	2.14	0.17	2.31	0.46	1.00	0.52	1.98	-0.71	1.27
6 L / 17	0.49	1.24	0.56	2.29	0.19	2.48	0.49	1.24	0.56	2.29	0.17	2.46	0.49	1.07	0.56	2.12	-0.61	1.51
7 L / 17	0.50	1.27	0.57	2.34	0.22	2.55	0.50	1.27	0.57	2.34	0.20	2.53	0.50	1.09	0.57	2.16	-0.52	1.64
8 L / 17	0.48	1.23	0.55	2.27	0.26	2.53	0.48	1.23	0.55	2.27	0.25	2.52	0.48	1.06	0.55	2.09	-0.41	1.68
9 L / 17	0.45	1.14	0.51	2.10	0.29	2.39	0.45	1.14	0.51	2.10	0.25	2.34	0.45	0.98	0.51	1.94	-0.31	1.62
10 L / 17	0.39	1.00	0.45	1.84	0.33	2.17	0.39	1.00	0.45	1.84	0.30	2.14	0.39	0.86	0.45	1.70	-0.22	1.48
11 L / 17	0.32	0.82	0.37	1.52	0.36	1.88	0.32	0.82	0.37	1.52	0.33	1.85	0.32	0.71	0.37	1.40	-0.11	1.29
12 L / 17	0.25	0.63	0.28	1.15	0.39	1.54	0.25	0.63	0.28	1.15	0.35	1.51	0.25	0.54	0.28	1.07	0.00	1.06
13 L / 17	0.17	0.42	0.19	0.78	0.41	1.19	0.17	0.42	0.19	0.78	0.39	1.17	0.17	0.36	0.19	0.72	0.09	0.82
14 L / 17	0.09	0.24	0.11	0.44	-0.08	0.36	0.09	0.24	0.11	0.44	-0.06	0.38	0.09	0.21	0.11	0.41	-0.31	0.10
15 L / 17	0.04	0.09	0.04	0.17	-0.05	0.13	0.04	0.09	0.04	0.17	-0.03	0.15	0.04	0.08	0.04	0.16	-0.20	-0.04
16 L / 17	0.01	0.02	0.01	0.03	-0.03	0.00	0.01	0.02	0.01	0.03	0.00	0.03	0.01	0.01	0.01	0.03	-0.11	-0.08
PIER 1	0.00	0.00	0.00	0.00	0.00	0.00	0.00	0.00	0.00	0.00	0.00	0.00	0.00	0.00	0.00	0.00	0.00	0.00
1 L / 22	0.04	0.10	0.05	0.19	0.01	0.20	0.04	0.10	0.05	0.19	-0.13	0.06	0.04	0.08	0.04	0.15	-0.17	-0.02
2 L / 22	0.11	0.27	0.13	0.51	0.02	0.53	0.11	0.27	0.13	0.51	-0.28	0.23	0.11	0.23	0.12	0.46	-0.35	0.11
3 L / 22	0.20	0.51	0.24	0.96	0.03	0.99	0.20	0.51	0.24	0.96	-0.46	0.49	0.20	0.44	0.24	0.88	-0.52	0.36
4 L / 22	0.31	0.79	0.36	1.47	0.54	2.01	0.31	0.79	0.36	1.47	-0.09	1.38	0.31	0.68	0.36	1.36	-0.19	1.17
5 L / 22	0.43	1.08	0.50	2.01	0.56	2.56	0.43	1.08	0.50	2.01	-0.25	1.75	0.43	0.93	0.50	1.86	-0.36	1.49
6 L / 22	0.54	1.36	0.62	2.52	0.57	3.09	0.54	1.36	0.62	2.52	-0.44	2.09	0.54	1.17	0.63	2.34	-0.54	1.80
7 L / 22	0.64	1.61	0.74	2.99	0.57	3.56	0.64	1.61	0.74	2.99	-0.59	2.40	0.64	1.39	0.74	2.76	-0.72	2.04
8 L / 22	0.72	1.82	0.83	3.37	0.59	3.96	0.72	1.82	0.83	3.37	-0.71	2.65	0.72	1.56	0.83	3.11	-0.90	2.22
9 L / 22	0.78	1.97	0.90	3.65	0.60	4.25	0.78	1.97	0.90	3.65	-0.85	2.79	0.78	1.69	0.90	3.37	-1.02	2.35
10 L / 22	0.81	2.05	0.94	3.81	0.62	4.42	0.81	2.05	0.94	3.81	-0.74	3.07	0.81	1.77	0.94	3.52	-0.88	2.63
11 L / 22	0.82	2.07	0.95	3.84	0.63	4.47	0.82	2.07	0.95	3.84	-0.61	3.23	0.82	1.78	0.95	3.55	-0.74	2.80
12 L / 22	0.80	2.02	0.93	3.75	0.63	4.38	0.80	2.02	0.93	3.75	-0.49	3.26	0.80	1.74	0.93	3.46	-0.62	2.84
13 L / 22	0.75	1.90	0.87	3.53	0.65	4.18	0.75	1.90	0.87	3.53	-0.36	3.17	0.75	1.64	0.87	3.26	-0.48	2.78
14 L / 22	0.68	1.73	0.79	3.20	0.66	3.86	0.68	1.73	0.79	3.20	-0.23	2.97	0.68	1.48	0.79	2.96	-0.34	2.62
15 L / 22	0.59	1.50	0.69	2.78	0.68	3.45	0.59	1.50	0.69	2.78	-0.11	2.67	0.59	1.29	0.69	2.57	-0.20	2.37
16 L / 22	0.49	1.23	0.57	2.29	0.69	2.98	0.49	1.23	0.57	2.29	0.01	2.29	0.49	1.06	0.57	2.12	-0.06	2.06
17 L / 22	0.38	0.95	0.44	1.76	0.69	2.45	0.38	0.95	0.44	1.76	0.13	1.89	0.38	0.81	0.44	1.63	0.07	1.69
18 L / 22	0.26	0.66	0.31	1.23	0.71	1.94	0.26	0.66	0.31	1.23	0.26	1.49	0.26	0.57	0.31	1.14	0.21	1.35
19 L / 22	0.16	0.40	0.19	0.74	-0.03	0.71	0.16	0.40	0.19	0.74	-0.37	0.38	0.16	0.34	0.19	0.69	-0.40	0.29
20 L / 22	0.08	0.19	0.09	0.35	-0.02	0.34	0.08	0.19	0.09	0.35	-0.24	0.11	0.08	0.16	0.09	0.33	-0.27	0.06
21 L / 22	0.02	0.06	0.03	0.12	0.00	0.11	0.02	0.06	0.03	0.12	-0.13	-0.01	0.02	0.05	0.03	0.10	-0.13	-0.02
PIER 2	0.00	0.00	0.00	0.00	0.00	0.00	0.00	0.00	0.00	0.00	0.00	0.00	0.00	0.00	0.00	0.00	0.00	0.00
1 L / 22	0.03	0.08	0.04	0.15	-0.01	0.15	0.03	0.08	0.04	0.15	-0.01	0.15	0.02	0.04	0.02	0.07	-0.01	0.06
2 L / 22	0.08	0.20	0.09	0.37	-0.02	0.35	0.08	0.20	0.09	0.37	-0.02	0.35	0.07	0.16	0.08	0.31	-0.02	0.29
3 L / 22	0.16	0.40	0.19	0.75	-0.03	0.72	0.16	0.40	0.19	0.75	-0.03	0.72	0.16	0.34	0.18	0.69	-0.03	0.66
4 L / 22	0.26	0.66	0.31	1.23	0.70	1.93	0.26	0.66	0.31	1.23	0.71	1.94	0.26	0.57	0.31	1.14	0.71	1.85
5 L / 22	0.37	0.94	0.44	1.75	0.69	2.45	0.37	0.94	0.44	1.75	0.69	2.45	0.38	0.82	0.44	1.63	0.70	2.34
6 L / 22	0.49	1.23	0.57	2.28	0.68	2.96	0.49	1.23	0.57	2.28	0.68	2.96	0.49	1.06	0.57	2.12	0.68	2.80
7 L / 22	0.59	1.49	0.69	2.77	0.67	3.45	0.59	1.49	0.69	2.77	0.67	3.45	0.59	1.29	0.69	2.57	0.67	3.25
8 L / 22	0.68	1.72	0.79	3.20	0.66	3.86	0.68	1.72	0.79	3.20	0.66	3.86	0.68	1.49	0.79	2.96	0.66	3.63
9 L / 22	0.75	1.90	0.87	3.53	0.66	4.18	0.75	1.90	0.87	3.53	0.64	4.17	0.75	1.64	0.87	3.26	0.66	3.92
10 L / 22	0.80	2.02	0.93	3.75	0.63	4.38	0.80	2.02	0.93	3.75	0.63	4.38	0.80	1.74	0.93	3.46	0.65	4.11
11 L / 22	0.82	2.07	0.95	3.84	0.63	4.47	0.82	2.07	0.95	3.84	0.63	4.47	0.82	1.78	0.95	3.55	0.63	4.17
12 L / 22	0.81	2.06	0.94	3.81	0.62	4.43	0.81	2.06	0.94	3.81	0.62	4.43	0.81	1.76	0.94	3.51	0.62

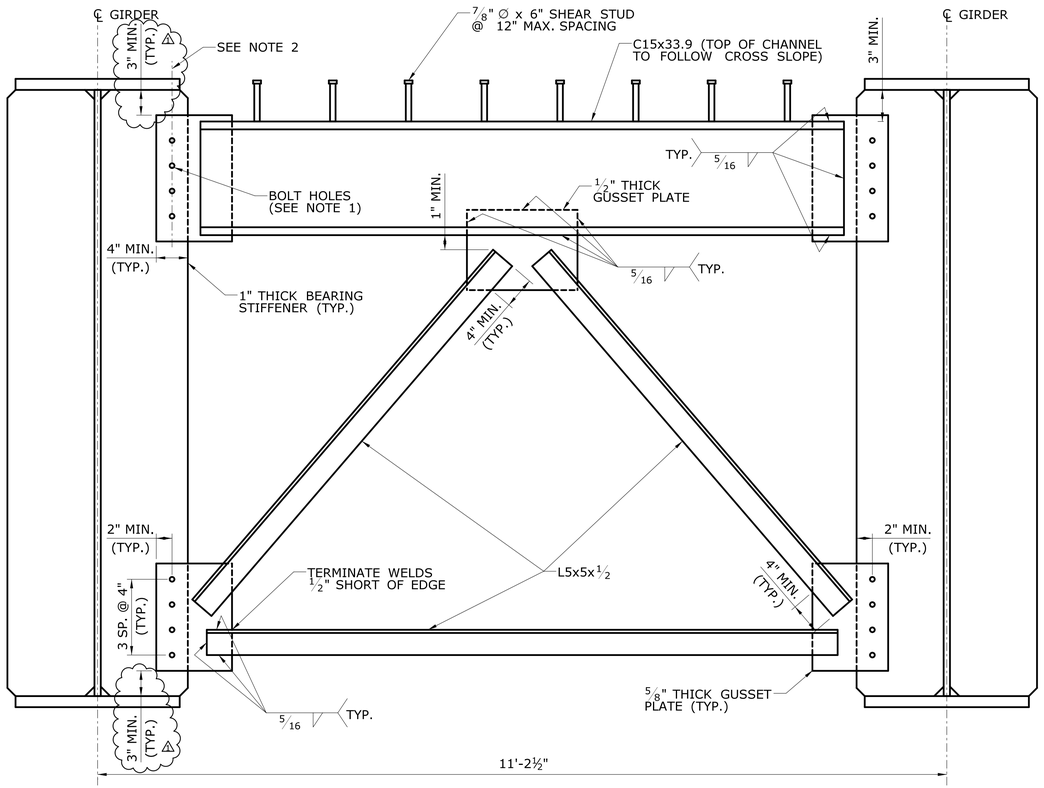

END BEARING CROSS FRAME (D1)

SCALE: 1" = 1'-0"

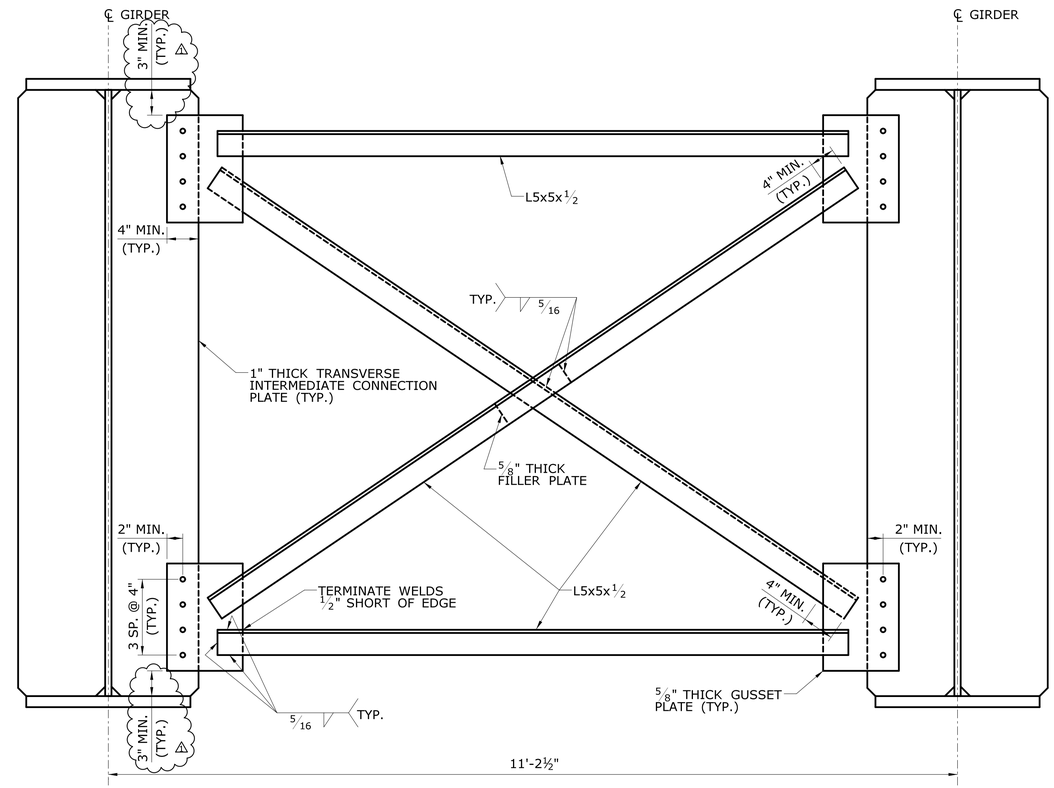

INTERMEDIATE CROSS FRAME (D2)

SCALE: 1" = 1'-0"

NOTES:

1. BOLT HOLES IN CHANNELS, ANGLES AND GUSSET PLATES SHALL BE 15/16" ∅ (STANDARD) FOR 7/8" ∅ BOLTS. BOLT HOLES IN BEARING STIFFENERS OR TRANSVERSE INTERMEDIATE CONNECTION PLATES SHALL BE 1 1/16" ∅ (OVERSIZED).
2. CENTERLINE OF BOLT HOLES SHALL BE VERTICAL.
3. FOR CROSS FRAME LOCATIONS, SEE DWG. NO. S-28.

ADDENDUM NO. 1

REV.	DATE	REVISION DESCRIPTION	SHEET NO.
1	12/06/2019	ADD MISC. DIMENSIONS	04.01.33.A1

THE INFORMATION, INCLUDING ESTIMATED QUANTITIES OF WORK, SHOWN ON THESE SHEETS IS BASED ON LIMITED INVESTIGATIONS BY THE STATE AND IS IN NO WAY WARRANTED TO INDICATE THE CONDITIONS OF ACTUAL QUANTITIES OF WORK WHICH WILL BE REQUIRED.

Plotted Date: 2/7/2020

DESIGNER/DRAFTER: CS

CHECKED BY: BY

STATE OF CONNECTICUT
DEPARTMENT OF TRANSPORTATION

Filename: ...\SB_MSTL_0096_0201_CROSS FRAME DET_WB.dgn

SIGNATURE/ BLOCK:

STATE OF CONNECTICUT · THOMAS A. HARLEY · 0014890 · LICENSED PROFESSIONAL ENGINEER

LOUIS BERGER US
A WSP COMPANY
55 CAPITAL BOULEVARD
ROCKY HILL, CT 06067

PROJECT TITLE:

REHABILITATION OF BRIDGE NO. 04180 - I-84 WB OVER HOUSATONIC RIVER

TOWN: **NEWTOWN/SOUTHBURY**

DRAWING TITLE: **TYPICAL CROSS FRAME DETAILS**

PROJECT NO. **96-201**

DRAWING NO. **S-33**

SHEET NO. **04.01.33.A1**

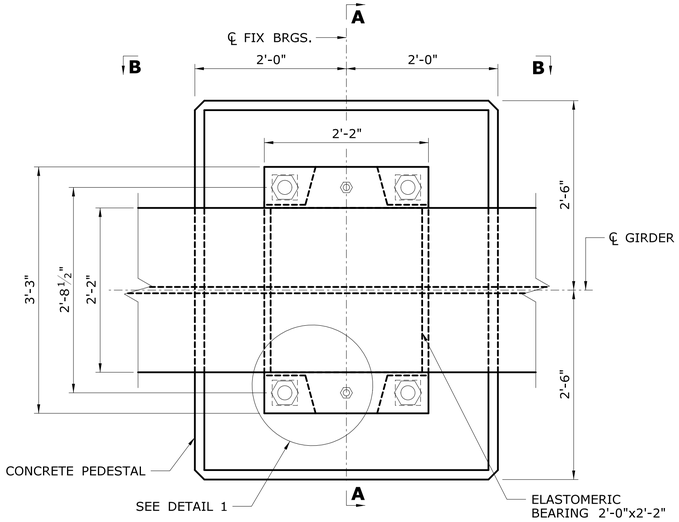

PLAN AT FIXED PIERS

PIER 3

SCALE: 1" = 1'-0"

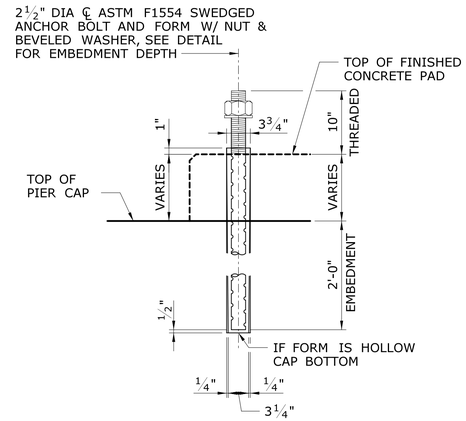

ANCHOR BOLT DETAIL

NTS

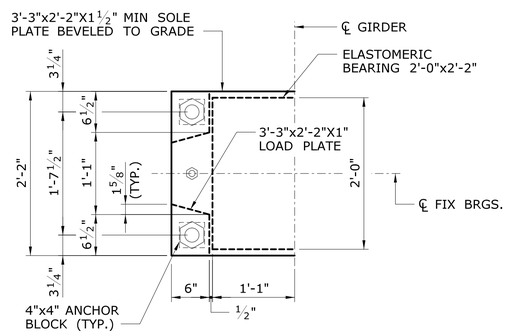

DETAIL 1

NTS

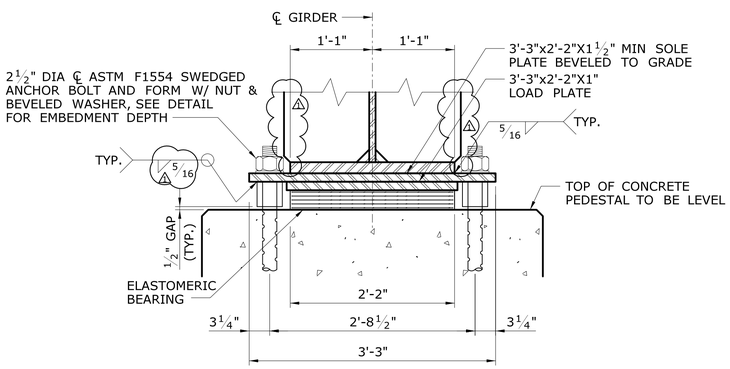

SECTION A-A

NTS

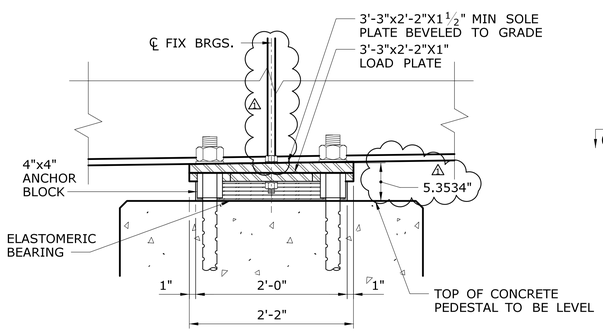

SECTION B-B

NTS

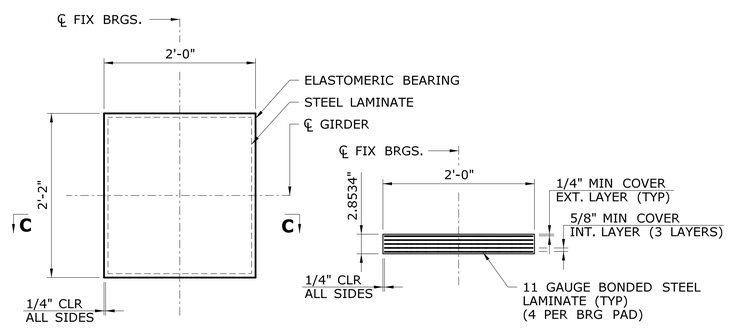

PLAN **SECTION C-C**

~~ELEVATION AT FIXED PIERS~~ ELASTOMERIC BEARING PAD - FIXED BEARING

PIER 3

NTS

PIER 3 BEARING SCHEDULE									
LAMINATED ELASTOMERIC BEARING PADS									
LOCATION	MOVEMENT CLASS	NUMBER OF BEARINGS	NUMBER OF INTERIOR ELASTOMER LAYERS	SIZE		TOTAL THICKNESS	INTERIOR LAYER THICKNESS	EXTERIOR LAYER THICKNESS	NO. OF SHIMS
				L	W				
PIER 3	FIX	6	3	24"	26"	2.8534"	5/8"	1/4"	4

~~NEOPRENE~~ ELASTOMERIC BEARING PAD NOTES:

1. MANUFACTURE ALL BEARINGS IN ACCORDANCE WITH SPECIAL PROVISION FOR "ELASTOMERIC BEARINGS".
2. PROVIDE MATERIAL IN ACCORDANCE WITH THE STATE OF CONNECTICUT DEPARTMENT OF TRANSPORTATION STANDARD SPECIFICATIONS FOR ROADS, BRIDGES, FACILITIES AND INCIDENTAL CONSTRUCTION (FORM 817) SECTION M.17.01.
3. THE BEARING AREAS OF THE MASONRY UPON WHICH THE ELASTOMERIC BEARING PADS ARE TO REST SHALL BE CAREFULLY FINISHED, BY GRINDING IF NECESSARY, TO A SMOOTH, EVEN LEVEL SURFACE OF THE REQUIRED ELEVATION, AND SHALL SHOW NO VARIATIONS FROM A TRUE PLANE GREATER THAN 1/16 INCH OVER THE ENTIRE AREA UPON WHICH THE ELASTOMERIC BEARING PADS ARE TO REST.
4. THE ELASTOMER SHALL BE VIRGIN NEOPRENE GRADE 60 DUROMETER WITH A SHEAR MODULUS BETWEEN 0.130 KSI AND 0.20 KSI.
5. THE STEEL LAMINAE USED IN THE ELASTOMERIC BEARING SHALL CONFORM TO AASHTO M270, GRADE 36 AND SHALL BE PAID FOR UNDER THE ITEM "ELASTOMERIC BEARINGS".
6. SWEDGE ANCHOR BOLTS SHALL CONFORM TO THE REQUIREMENTS OF ASTM, F1554. THE NUTS SHALL CONFORM TO ASTM A563 OR ASTM A194 GRADE 2H AND WASHER TO ASTM F436. THE BOLTS, NUTS, AND WASHERS SHALL BE HOT-DIPPED GALVANIZED IN ACCORDANCE WITH A153.
7. THE ANCHOR BOLTS, NUTS, AND WASHERS SHALL BE PAID FOR UNDER THE ITEM ~~"ELASTOMERIC BEARINGS"~~ "STRUCTURAL STEEL (SITE NO. 1)".
8. ALL OTHER STEEL IN BEARINGS INCLUDING SOLE PLATES, ~~LOAD PLATES, SHEAR PLATES, BEARING PLATES~~ AND CONNECTIONS BETWEEN GIRDER AND BEARING ASSEMBLY SHALL CONFORM TO AASHTO M270 GRADE 50 WT2 AND SHALL BE PAID UNDER THE ITEM "STRUCTURAL STEEL (SITE NO. 1)".
9. WELDING DETAILS, PROCEDURES, AND TESTING METHODS SHALL CONFORM TO ANSI/AASHTO/AWS D1.5-15 BRIDGE WELDING CODE.
10. THE LOAD PLATE SHALL BE HOT BONDED TO THE ELASTOMERIC BEARING PAD DURING VULCANIZATION.
11. COSTS FOR VULCANIZED LOAD PLATE TO BE INCLUDED UNDER ITEM "ELASTOMERIC BEARINGS".
12. THE SOLE PLATE SHALL BE BEVELED TO MATCH THE SLOPE OF THE GIRDER SO THAT THE BOTTOM SURFACE OF THE PLATE IS LEVEL AFTER THE APPLICATION OF FULL DEAD LOAD.
13. ELASTOMERIC BEARINGS SHALL BE INSTALLED WHEN THE AMBIENT TEMPERATURE HAS BEEN BETWEEN 40 AND 80 DEGREES FAHRENHEIT FOR A PERIOD OF AT LEAST TWO HOURS. CENTERLINE OF BEARING PAD AND SOLE PLATE TO BE INSTALLED AT THE CENTERLINE OF BEARING.
14. IN NO CASE SHALL THE ELASTOMER OF VULCANIZED BOND BE SUBJECTED TO TEMPERATURES HIGHER THAN 400 DEGREES FAHRENHEIT.
15. MAX DL + SDL = 549 KIPS
    MAX LL = 309 KIPS
    LOADS INDICATED ARE UNFACTORED
16. BEARING DESIGN METHOD: AASHTO LRFD SECTION 14, METHOD A.
17. ANCHOR BLOCK SHALL BE FABRICATED FROM ASTM M270 GRADE 50W STEEL.

ANCHOR BOLT FORM NOTES:

1. FORMS SHALL BE UNOILED, HELD IN PLACE ACCURATELY BY TEMPLATE, AND REMOVED AFTER CONCRETE HAS HARDENED.
2. ANCHOR BOLTS SHALL BE SET ACCURATELY AND GROUTED WITH NON-SHRINK GROUT.
3. THE COST OF FURNISHING AND INSTALLING ANCHOR BOLT FORMS TO BE INCLUDED IN THE ITEM "COLUMN AND CAP CONCRETE".
4. ANCHOR BOLTS TO CLEAR REINFORCEMENT AND IF NECESSARY RESPACE OR ADD EXTRA ROWS OF REINFORCING.
5. NUTS TO BE DRAWN UP FINGER TIGHT, THEN BACKED OFF 1/8 TURN AND THREADS OF ANCHOR BOLTS BURRED OFF AT FACE OF NUT WITH A POINTED TOOL.

REFERENCES

1. FOR GENERAL PLAN, SEE DWG. NO. S-02.
2. FOR GENERAL NOTES, SEE DWG. NO. S-03.
3. FOR PIER DETAILS, SEE DWG. NO. S-24 THROUGH NO. S-27.
4. FOR ABUTMENT DETAILS, SEE DWG. NO. S-17 THROUGH NO. S-20.

ADDENDUM NO. 1

REV.	DATE	REVISION DESCRIPTION	SHEET NO.
1	1/16/2020	DETAILING REVISIONS	04.01.34.A1

THE INFORMATION, INCLUDING ESTIMATED QUANTITIES OF WORK, SHOWN ON THESE SHEETS IS BASED ON LIMITED INVESTIGATIONS BY THE STATE AND IS IN NO WAY WARRANTED TO INDICATE THE CONDITIONS OF ACTUAL QUANTITIES OF WORK WHICH WILL BE REQUIRED.

Plotted Date: 2/13/2020

DESIGNER/DRAFTER: **GMP/MWQ**

CHECKED BY: **CMH**

SCALE AS NOTED

STATE OF CONNECTICUT DEPARTMENT OF TRANSPORTATION

Filename: ...\SB_MSTL_0096_0201_BRG DETAIL 1-WB.dgn

SIGNATURE/BLOCK: STATE OF CONNECTICUT THOMAS A PARKER 0014850 LICENSED PROFESSIONAL ENGINEER

LOUIS BERGER US
A WSP COMPANY
55 CAPITAL BOULEVARD
ROCKY HILL, CT 06067

PROJECT TITLE:

REHABILITATION OF BRIDGE NO. 04180- I-84 WB OVER HOUSATONIC RIVER

TOWN: **NEWTOWN/SOUTHBURY**

DRAWING TITLE: **BEARING DETAILS - 1**

PROJECT NO. **96-201**

DRAWING NO. **S-34**

SHEET NO. **04.01.34.A1**

HIGH LOAD MULTI-ROTATIONAL (DISC) BEARING ASSEMBLY SCHEDULE (INCHES)

BEARING	POLYTRON DISC			ANCHOR BOLTS		SHEAR PIN		TOP PTFE		SIDE PTFE			TOP STAINLESS STEEL			HEIGHT	SIDE STAINLESS STEEL			BEARING BLOCK			MASONRY PLATE					GUIDE BARS			SOLE PLATE		
	A	B	C	E	QTY	F	G	H	I	J	K	L	M	N	O	GG	P	Q	R	S	T	U	V	W	X	Y	Z	AA	BB	CC	DD	EE	FF
ABUT 1 & 2	11 3/4	3 3/8	1 7/8	1 1/2	4	3 1/4	4.52	11 7/8	0.188	11 7/8	1 1/2	0.188	20 7/8	12 1/8	0.105	6.70	20 7/8	1 3/4	0.105	13 1/4	17	1 7/8	1 1/8	14 5/8	37 1/4	16	4 11/16	21 7/8	2 1/8	2	1 1/2	23 3/4	28
PIER 1 △1	19 7/8	5 3/8	3 1/8	2	6	5 1/4	7.64	20 1/2	0.188	24 3/4	2 1/8	0.188	28	20 3/4	0.105	9.57	32 1/4	2 3/8	0.105	22 3/8	27 1/2	2 1/2	1 7/8	25 1/4	43 3/8	18 5/8	9 9/16	33 1/4	2 3/4	3	1 3/4	33 3/8	31 1/2
PIER 2	20 1/8	5 3/8	3 1/4	2	6	5 1/4	7.89	21	0.188	24 3/4	2 1/4	0.188	26 1/2	21 1/4	0.105	10.07	30 1/4	2 1/2	0.105	22 5/8	25 1/2	2 3/4	2	26	45 7/8	19 7/16	9 1/2	31 1/4	2 7/8	3 1/4	1 3/4	32 1/8	31 1/2

HIGH LOAD MULTI-ROTATIONAL (DISC) BEARING - DESIGN LOADS (KIPS)

BEARING	AASHTO LOAD COMBINATION	VERTICAL DL MIN	DL MAX	FWS MIN	FWS MAX	LL+I MIN	LL+I MAX	WS MIN	WS MAX	WL MIN	WL MAX	BR MIN	BR MAX	FR MIN	FR MAX	EQ MIN	EQ MAX	TOTAL MIN	TOTAL MAX	HORIZONTAL TRANSVERSE	HORIZONTAL LONGITUDINAL	DESIGN MOVEMENT (IN) * TRANSVERSE	DESIGN MOVEMENT (IN) * LONGITUDINAL	DESIGN ROTATION (RAD)**
ABUT 1 & 2 △1	SERV-I	120.5	131.4	18.0	18.0	-20.6	143.9	-5.7	3.4	-1.4	0.9	0	0	0	0	-	-	111	298	7	6	N/A	6.68	0.0217
	EXT-I	108.5	164.3	11.7	26.9	0	14.6	-	-	-	-	-	-	0	0	0	0	120	206	45	N/A			
	STR-I	108.5	164.3	11.7	26.9	-36.0	251.8	-	-	-	-	0	0	0	0	-	-	84	443	0	6			
	STR-III	108.5	164.3	11.7	26.9	-	-	-26.6	15.9	-	-	0	0	0	0	-	-	94	207	26	6			
PIER 1	SERV-I	443.5	483.1	65.0	65.0	-24.2	307.7	-13.4	8.0	-3.3	2.0	0	0	0	0	-	-	468	866	16	22	N/A	5.13	0.0218
	EXT-I	399.2	603.9	42.2	97.4	0	34.0	-	-	-	-	-	-	0	0	0	0	441	735	154	N/A			
	STR-I	399.2	603.9	42.2	97.4	-42.4	538.4	-	-	-	-	0	0	0	0	-	-	399	1240	0	22			
	STR-III	399.2	603.9	42.2	97.4	-	-	-62.4	37.4	-	-	0	0	0	0	-	-	379	739	61	22			
PIER 2	SERV-I	470.7	512.5	68.5	68.5	-24.2	307.7	-15.3	9.2	-3.8	2.3	0	0	0	0	-	-	496	900	19	23	N/A	3.06	0.0221
	EXT-I	423.7	640.6	44.5	102.8	0	38.8	-	-	-	-	-	-	0	0	0	0	468	782	165	N/A			
	STR-I	423.7	640.6	44.5	102.8	-42.4	538.4	-	-	-	-	0	0	0	0	-	-	426	1282	0	23			
	STR-III	423.7	640.6	44.5	102.8	-	-	-71.5	42.9	-	-	0	0	0	0	-	-	397	786	70	23			

LEGEND

DL	DEAD LOAD
FWS	FUTURE WEARING SURFACE
LL+I	LIVE LOAD WITH IMPACT
WS	WIND LOAD ON STRUCTURE
WL	WIND LOAD ON LIVE LOAD
BR	BRAKING FORCE
FR	FRICTIONAL FORCES
EQ	EARTHQUAKE EFFECTS △1

* TWO WAY MOVEMENT, CONTRACTION OR EXPANSION PLUS TOLERANCES

** DESIGN ROTATION INCLUDES LL+I ROTATION AND CONSTRUCTION TOLERANCE OF 0.02 RADIANS. PERMANENT DEAD LOAD ROTATION AND ROADWAY VERTICAL CURVE ARE ACCOMMODATED BY BEVELED SOLE PLATE AND CAMBER.

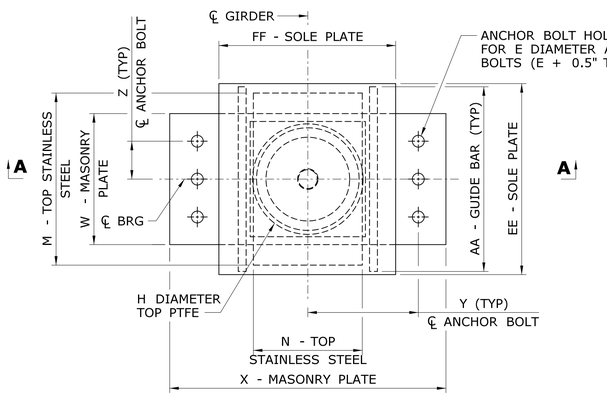

HLMR (DISC) BEARING PLAN
NTS

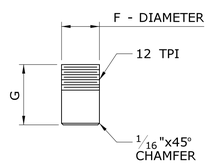

SHEAR PIN
NTS

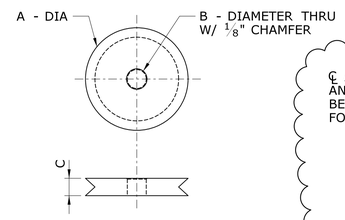

POLYTRON DISC
NTS

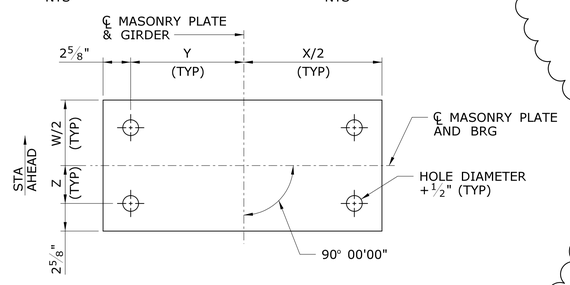

ANCHOR BOLT LOCATION PLAN
NTS

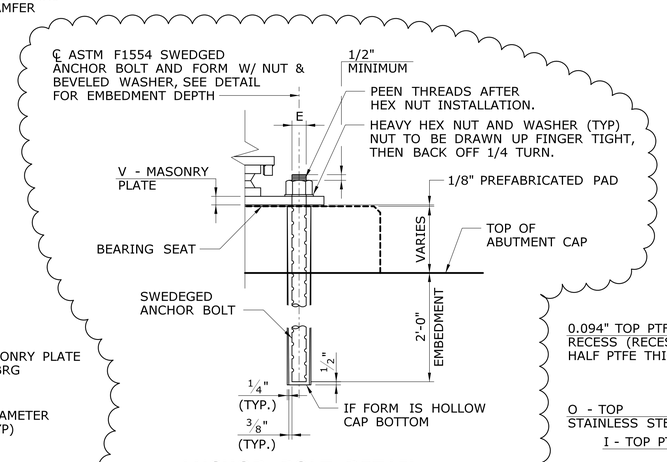

ANCHOR BOLT DETAIL
NTS

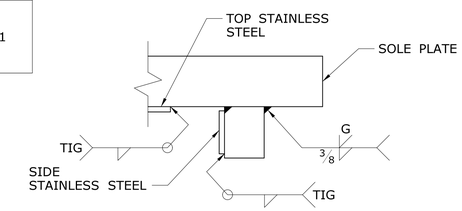

GUIDE BAR AND STAINLESS STEEL WELD DETAIL
NTS

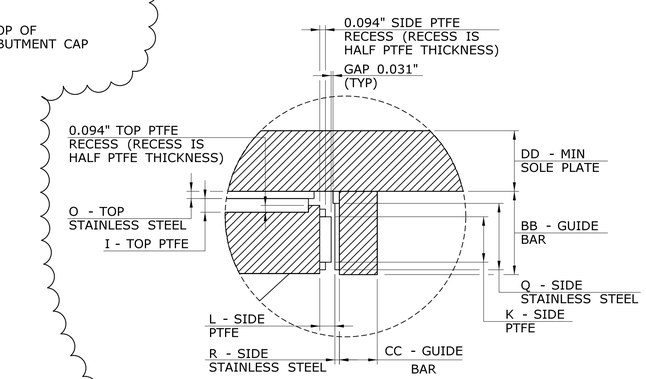

DETAIL 1
NTS

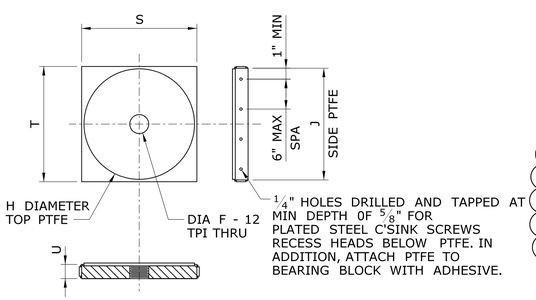

BEARING BLOCK
NTS

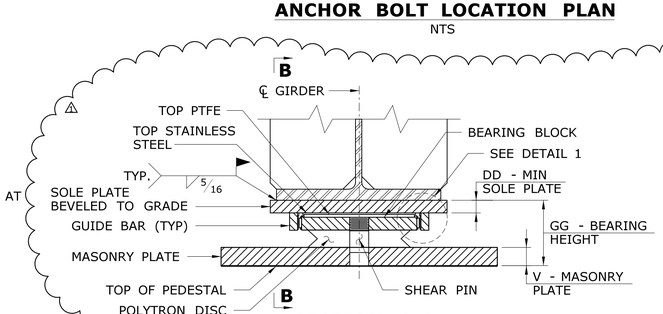

SECTION A-A
NTS

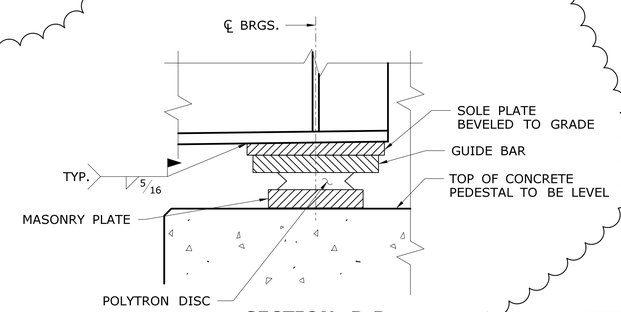

SECTION B-B
NTS

REFERENCES

1. FOR GENERAL PLAN, SEE DWG. NO. S-02.
2. FOR GENERAL NOTES, SEE DWG. NO. S-03.
3. FOR PIER DETAILS, SEE DWG. NO. S-24 THROUGH NO. S-27.
4. FOR ABUTMENT DETAILS, SEE DWG. NO. S-17 THROUGH NO. S-20.
5. FOR ANCHOR BOLT FORM NOTES, SEE DWG NO. 34.
6. HIGH LOAD MULTI-ROTATIONAL (DISC) BEARINGS SHALL BE PAID UNDER THE ITEM "POT, SPHERICAL, OR DISC BEARINGS (300 KIPS)", "POT, SPHERICAL, OR △1 DISC BEARINGS (900 KIPS)", OR "POT, SPHERICAL, OR DISC BEARINGS (950 KIPS)".

ADDENDUM NO. 1

REV.	DATE	REVISION DESCRIPTION	SHEET NO.
△1	1/16/2020	DETAILING REVISIONS	04.01.35.A1

THE INFORMATION, INCLUDING ESTIMATED QUANTITIES OF WORK, SHOWN ON THESE SHEETS IS BASED ON LIMITED INVESTIGATIONS BY THE STATE AND IS IN NO WAY WARRANTED TO INDICATE THE CONDITIONS OF ACTUAL QUANTITIES OF WORK WHICH WILL BE REQUIRED.

Plotted Date: 2/14/2020

DESIGNER/DRAFTER: GMP/MWQ
CHECKED BY: CMH
SCALE AS NOTED

STATE OF CONNECTICUT
DEPARTMENT OF TRANSPORTATION

Filename: ...\SB_MSTL_0096_0201_BRG DETAIL 2-WB.dgn

SIGNATURE/BLOCK: STATE OF CONNECTICUT THOMAS A HARLEY 0014890 LICENSED PROFESSIONAL ENGINEER

LOUIS BERGER US
A WSP COMPANY
55 CAPITAL BOULEVARD
ROCKY HILL, CT 06067

PROJECT TITLE:
REHABILITATION OF BRIDGE NO. 04180- I-84 WB OVER HOUSATONIC RIVER

TOWN: **NEWTOWN/SOUTHBURY**

DRAWING TITLE: **BEARING DETAILS - 2**

PROJECT NO. **96-201**
DRAWING NO. **S-35**
SHEET NO. **04.01.35.A1**

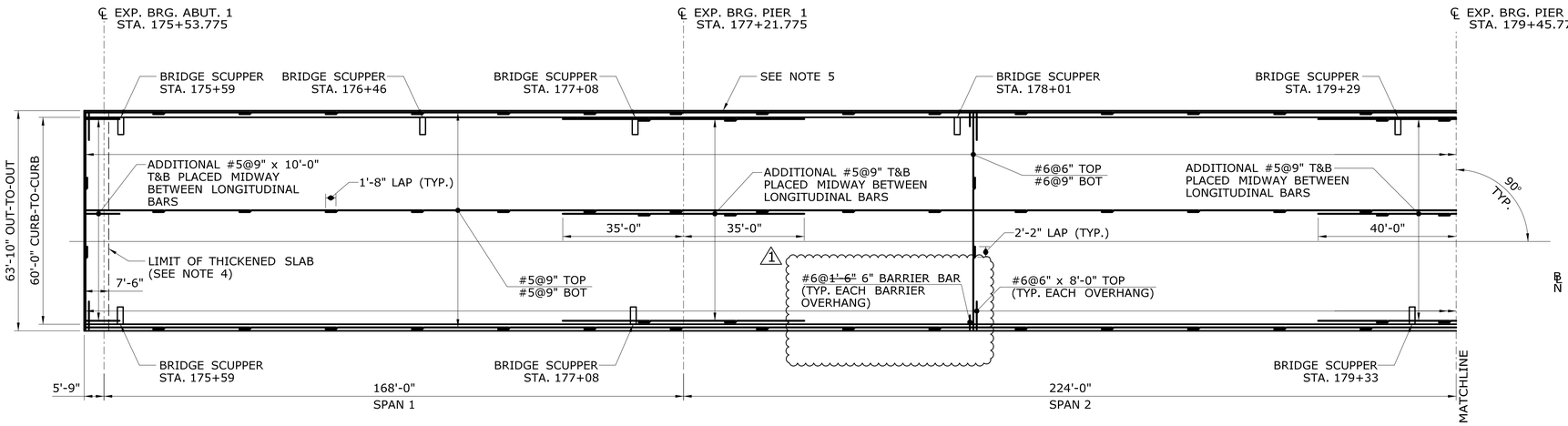

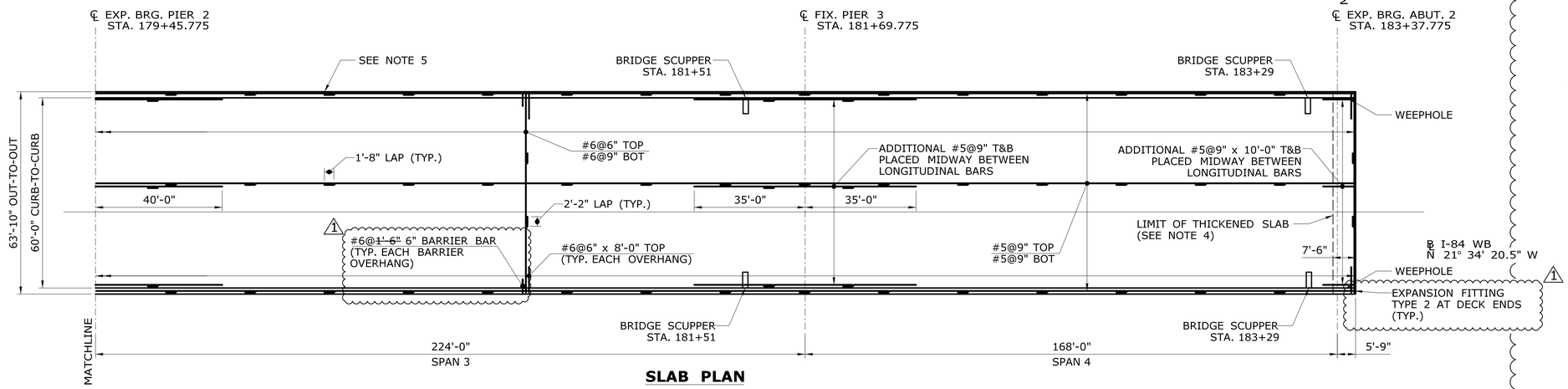

SLAB PLAN

SCALE: 1/8" = 1'-0"

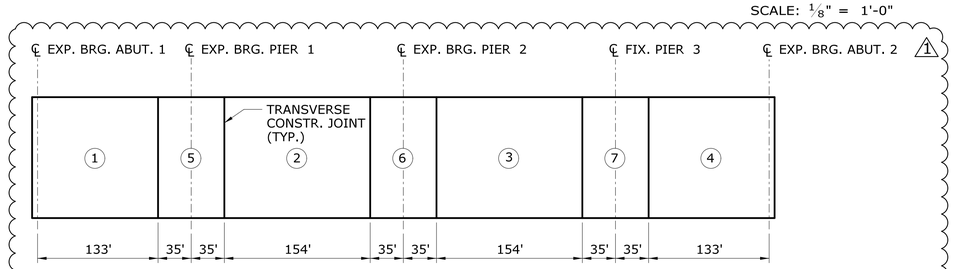

DECK POUR SEQUENCE PLAN

NOT TO SCALE

DECK POUR SEQUENCE NOTES

1. A DECK POURING SEQUENCE DIFFERENT FROM THE SHOWN MAY NOT BE USED WITHOUTH PRIOR APPROVAL OF THE ENGINEER.
2. EACH POUR SECTION MUST OBTAIN A MINIMUM STRENGTH OF f'c=2.5 KSI PRIOR TO PLACING CONCRETE IN NEXT SEQUENCE.

LEGEND

(1) DENOTES DECK POUR SEQUENCE NUMBER

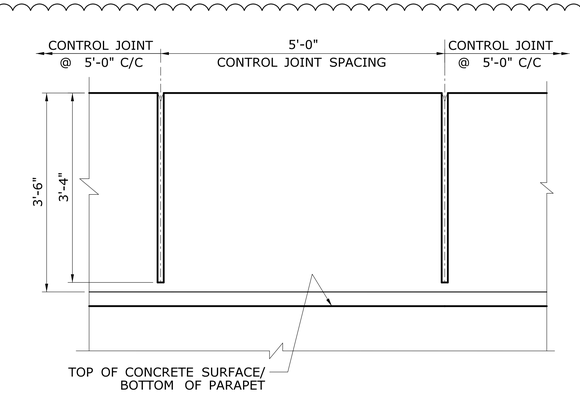

PARAPET-PARTIAL ELEVATION

SCALE: 3/4" = 1'-0"

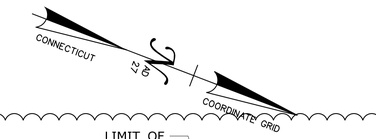

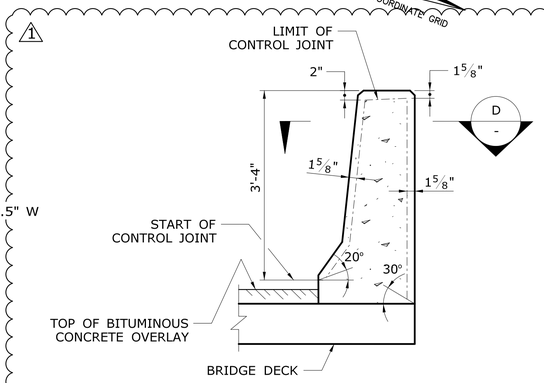

TYPICAL F-SHAPE

PLAN SECTION - CONTROL JOINT DETAIL

SCALE: 3/4" = 1'-0"

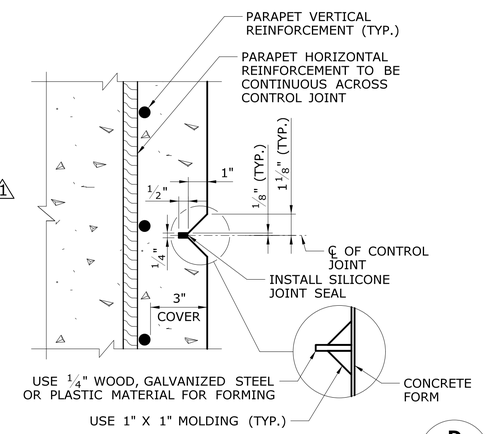

PLAN SECTION - CONTROL JOINT DETAIL

SCALE: N.T.S.

D
-

NOTES

1. ALL LAP SPLICES SHALL BE ALTERNATED A FULL LAP LENGTH.
2. FOR SLAB TYPICAL SECTION AND DETAILS, SEE DWG. NO. S-37.
3. FOR SCUPPER DETAILS, SEE DWG. NO. S-41 & S-42.
4. FOR REINFORCEMENT IN THICKENED SLAB, SEE DWG. NO. S-39.
5. SEE DWG. NOS. S-02, S-04, S-44, & S-45 FOR ELECTRICAL CONDUIT, JUNCTION BOXES AND LIGHT STANDARD ANCHORAGES TO BE CAST INTO THE WEST PARAPET.

ADDENDUM NO. 1

REV.	DATE	REVISION DESCRIPTION	SHEET NO.
1	1/27/2020	REBAR REVISED AND DETAILS ADDED	04.01.36.A1

THE INFORMATION, INCLUDING ESTIMATED QUANTITIES OF WORK, SHOWN ON THESE SHEETS IS BASED ON LIMITED INVESTIGATIONS BY THE STATE AND IS IN NO WAY WARRANTED TO INDICATE THE CONDITIONS OF ACTUAL QUANTITIES OF WORK WHICH WILL BE REQUIRED.

Plotted Date: 2/13/2020

DESIGNER/DRAFTER: CS
CHECKED BY: BY
SCALE AS NOTED

STATE OF CONNECTICUT
DEPARTMENT OF TRANSPORTATION

Filename: ...\SB_MSTL_0096_0201_SLAB PLAN_WB.dgn

SIGNATURE/BLOCK: STATE OF CONNECTICUT — THOMAS A. HARRIGAN — LICENSED PROFESSIONAL ENGINEER

LOUIS BERGER US
A WSP COMPANY
55 CAPITAL BOULEVARD
ROCKY HILL, CT 06067

PROJECT TITLE:
REHABILITATION OF BRIDGE NO. 04180 - I-84 WB OVER HOUSATONIC RIVER

TOWN: **NEWTOWN/SOUTHBURY**

DRAWING TITLE: **SLAB PLAN**

PROJECT NO. **96-201**
DRAWING NO. **S-36**
SHEET NO. **04.01.36.A1**

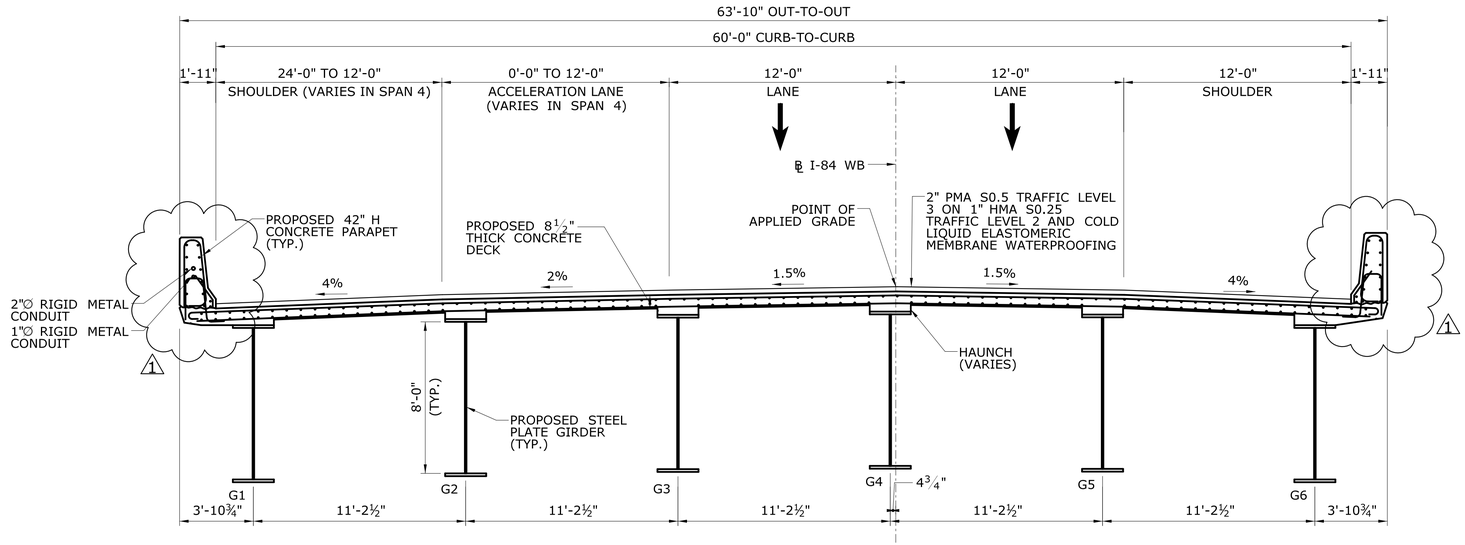

DECK REINFORCEMENT DETAILS

SCALE: ¼" = 1'-0"

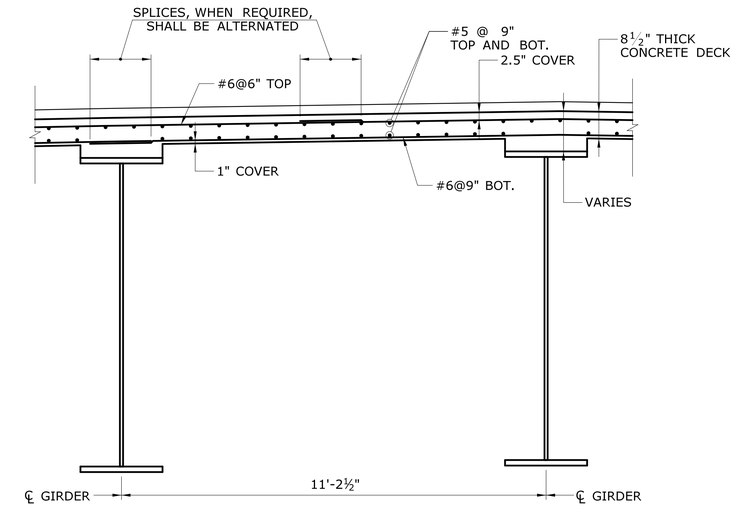

TYPICAL BAY REINFORCEMENT DETAIL

SCALE: ½" = 1'-0"

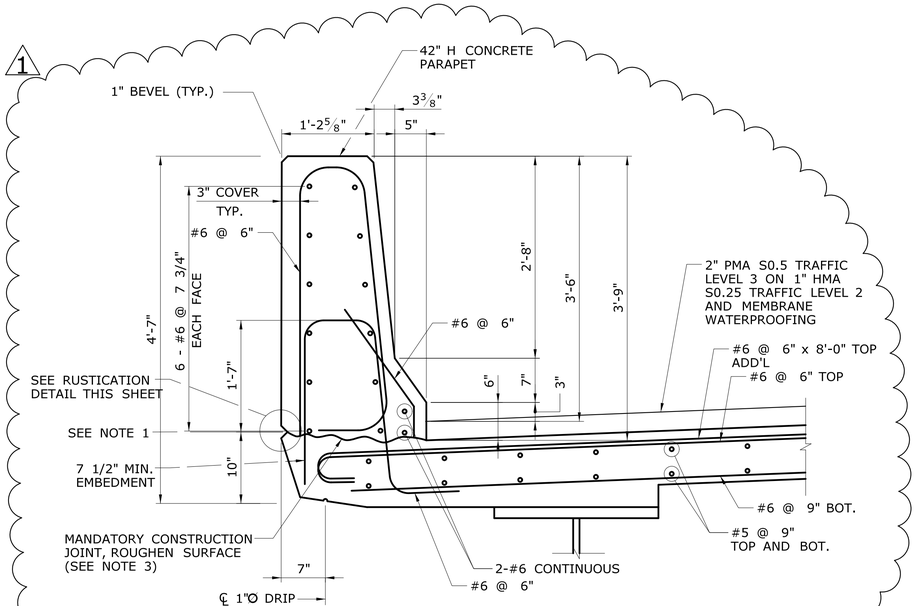

TYPICAL FASCIA PARAPET SECTION

SCALE: 1" = 1'-0"

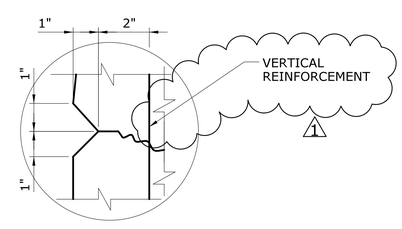

RUSTICATION DETAIL

NOT TO SCALE

NOTES

1. CONCRETE ABOVE THIS LINE TO BE POURED AFTER THE CONCRETE IN THE DECK SLAB HAS REACHED A STRENGTH OF f'c = 3500 PSI.
2. THE PARAPET SHALL BE CAST CONTINUOUS WITHOUT VERTICAL JOINTS THROUGH THE PARAPET SECTION. CONTROL JOINTS SHALL BE CONSTRUCTED IN PARAPETS WITH 5'-0" MAX. SPACING. LONGITUDINAL REINFORCEMENT SHALL BE CONTINUOUS WITH MINIMUM LAP SPLICES OF 3'-0". (1)
3. HORIZONTAL CONSTUCTION JOINTS ARE REQUIRED AND SHALL BE PLACED AS SHOWN.
4. ALL PARAPET REINFORCEMENT SHALL HAVE 3" COVER, EXCEPT AS NOTED. (1)
5. ~~ALL LAP SPLICES SHALL BE ALTERNATED A FULL LAP LENGTH. MINIMUM LAP SPLICES FOR LONGITUDINAL REINFORCING STEEL SHALL BE 1'-11" FOR #5 BARS.~~
6. WATERPROOFING MEMBRANE TO EXTEND 2" UP VERTICAL FACE OF THE PARAPETS.
7. PENETRATING SEALER PROTECTIVE COMPOUND (ITEM #0819002) SHALL BE APPLIED TO THE INSIDE FACE AND TOPS OF PARAPETS, PREFERABLY BEFORE THE WEARING SURFACE IS APPLIED.

ADDENDUM NO. 1

REV.	DATE	REVISION DESCRIPTION	SHEET NO.
1	1/27/2020	REVISE PARAPET REINFORCEMENT, NOTES, AND CALLOUTS	04.01.37.A1

THE INFORMATION, INCLUDING ESTIMATED QUANTITIES OF WORK, SHOWN ON THESE SHEETS IS BASED ON LIMITED INVESTIGATIONS BY THE STATE AND IS IN NO WAY WARRANTED TO INDICATE THE CONDITIONS OF ACTUAL QUANTITIES OF WORK WHICH WILL BE REQUIRED.

Plotted Date: 2/13/2020

DESIGNER/DRAFTER: CS
CHECKED BY: BY
SCALE AS NOTED

STATE OF CONNECTICUT
DEPARTMENT OF TRANSPORTATION

Filename: ...\SB_MSTL_0096_0201_SLAB DET_WB.dgn

SIGNATURE/BLOCK: STATE OF CONNECTICUT THOMAS A. CARLEY 001480 LICENSED PROFESSIONAL ENGINEER

LOUIS BERGER US
A WSP COMPANY
55 CAPITAL BOULEVARD
ROCKY HILL, CT 06067

PROJECT TITLE:
REHABILITATION OF BRIDGE NO. 04180 - I-84 WB OVER HOUSATONIC RIVER

TOWN: **NEWTOWN/SOUTHBURY**

DRAWING TITLE: **SLAB SECTION AND DETAILS**

PROJECT NO. **96-201**
DRAWING NO. **S-37**
SHEET NO. **04.01.37.A1**

TOP OF SLAB ELEVATIONS ALONG CL GIRDER						
	G1	G2	G3	G4	G5	G6
C.L. BRG @ AB1	140.82	141.27	141.71	142.15	142.60	142.34
1 L / 17	140.81	141.26	141.68	142.10	142.52	142.24
2 L / 17	140.81	141.25	141.65	142.05	142.45	142.14
3 L / 17	140.81	141.25	141.62	142.00	142.37	142.04
4 L / 17	140.80	141.24	141.59	141.94	142.29	141.94
5 L / 17	140.80	141.24	141.56	141.89	142.22	141.85
6 L / 17	140.80	141.23	141.53	141.84	142.14	141.77
7 L / 17	140.80	141.23	141.50	141.78	142.06	141.69
8 L / 17	140.79	141.22	141.48	141.73	141.99	141.61
9 L / 17	140.79	141.22	141.45	141.68	141.91	141.53
10 L / 17	140.77	141.19	141.42	141.63	141.84	141.46
11 L / 17	140.74	141.16	141.39	141.57	141.76	141.38
12 L / 17	140.71	141.13	141.35	141.52	141.68	141.30
13 L / 17	140.65	141.08	141.30	141.47	141.61	141.22
14 L / 17	140.60	141.02	141.24	141.41	141.53	141.14
15 L / 17	140.54	140.97	141.19	141.36	141.46	141.06
16 L / 17	140.49	140.92	141.14	141.31	141.38	140.98
C.L. BRG. @ PIER 1	140.44	140.86	141.08	141.25	141.30	140.91
1 L / 22	140.38	140.81	141.03	141.20	141.23	140.83
2 L / 22	140.33	140.75	140.97	141.14	141.15	140.74
3 L / 22	140.27	140.70	140.92	141.09	141.07	140.66
4 L / 22	140.22	140.64	140.86	141.03	140.99	140.58
5 L / 22	140.16	140.59	140.81	140.98	140.91	140.50
6 L / 22	140.11	140.53	140.75	140.92	140.83	140.42
7 L / 22	140.05	140.48	140.70	140.87	140.75	140.34
8 L / 22	140.00	140.42	140.64	140.81	140.68	140.26
9 L / 22	139.94	140.37	140.59	140.76	140.60	140.18
10 L / 22	139.89	140.31	140.53	140.70	140.54	140.13
11 L / 22	139.83	140.25	140.48	140.65	140.49	140.07
12 L / 22	139.77	140.20	140.42	140.59	140.43	140.01
13 L / 22	139.72	140.14	140.37	140.53	140.38	139.96
14 L / 22	139.66	140.09	140.31	140.48	140.32	139.90
15 L / 22	139.61	140.03	140.26	140.42	140.27	139.85
16 L / 22	139.55	139.98	140.20	140.37	140.21	139.79
17 L / 22	139.50	139.92	140.15	140.31	140.16	139.74
18 L / 22	139.44	139.87	140.09	140.26	140.10	139.68
19 L / 22	139.39	139.81	140.04	140.20	140.05	139.63
20 L / 22	139.33	139.76	139.98	140.15	139.99	139.57
21 L / 22	139.28	139.70	139.92	140.09	139.94	139.52
C.L. BRG. @ PIER 2	139.22	139.65	139.87	140.04	139.88	139.46
1 L / 22	139.17	139.59	139.81	139.98	139.83	139.41
2 L / 22	139.11	139.54	139.76	139.93	139.77	139.35
3 L / 22	139.06	139.48	139.70	139.87	139.72	139.30
4 L / 22	139.00	139.43	139.65	139.82	139.66	139.24
5 L / 22	138.95	139.37	139.59	139.76	139.61	139.19
6 L / 22	138.89	139.32	139.54	139.71	139.55	139.13
7 L / 22	138.84	139.26	139.48	139.65	139.50	139.08
8 L / 22	138.78	139.21	139.43	139.60	139.44	139.02
9 L / 22	138.73	139.15	139.37	139.54	139.38	138.97
10 L / 22	138.67	139.10	139.32	139.49	139.33	138.91
11 L / 22	138.62	139.04	139.26	139.43	139.27	138.86
12 L / 22	138.56	138.99	139.21	139.38	139.22	138.80
13 L / 22	138.51	138.93	139.15	139.32	139.16	138.75
14 L / 22	138.45	138.87	139.10	139.27	139.11	138.69
15 L / 22	138.40	138.82	139.04	139.21	139.05	138.64
16 L / 22	138.34	138.76	138.99	139.15	139.00	138.58
17 L / 22	138.28	138.71	138.93	139.10	138.94	138.52
18 L / 22	138.23	138.65	138.88	139.04	138.89	138.47
19 L / 22	138.17	138.60	138.82	138.99	138.83	138.41
20 L / 22	138.12	138.54	138.77	138.93	138.78	138.36
21 L / 22	138.06	138.49	138.71	138.88	138.72	138.30
C.L. BRG. @ PIER 3	138.01	138.43	138.66	138.82	138.67	138.25
1 L / 17	137.96	138.38	138.60	138.77	138.61	138.20
2 L / 17	137.90	138.33	138.55	138.72	138.56	138.14
3 L / 17	137.85	138.27	138.49	138.66	138.51	138.09
4 L / 17	137.79	138.22	138.44	138.61	138.45	138.03
5 L / 17	137.74	138.17	138.39	138.56	138.40	137.98
6 L / 17	137.69	138.11	138.33	138.50	138.35	137.93
7 L / 17	137.63	138.06	138.28	138.45	138.29	137.87
8 L / 17	137.58	138.00	138.23	138.39	138.24	137.82
9 L / 17	137.53	137.95	138.17	138.34	138.19	137.77
10 L / 17	137.47	137.90	138.12	138.29	138.13	137.71
11 L / 17	137.42	137.84	138.07	138.23	138.08	137.66
12 L / 17	137.37	137.79	138.01	138.18	138.02	137.61
13 L / 17	137.31	137.74	137.96	138.13	137.97	137.55
14 L / 17	137.26	137.68	137.91	138.07	137.92	137.50
15 L / 17	137.21	137.63	137.85	138.02	137.86	137.45
16 L / 17	137.15	137.58	137.80	137.97	137.81	137.39
C.L. BRG. @ AB2	137.10	137.52	137.74	137.91	137.76	137.34

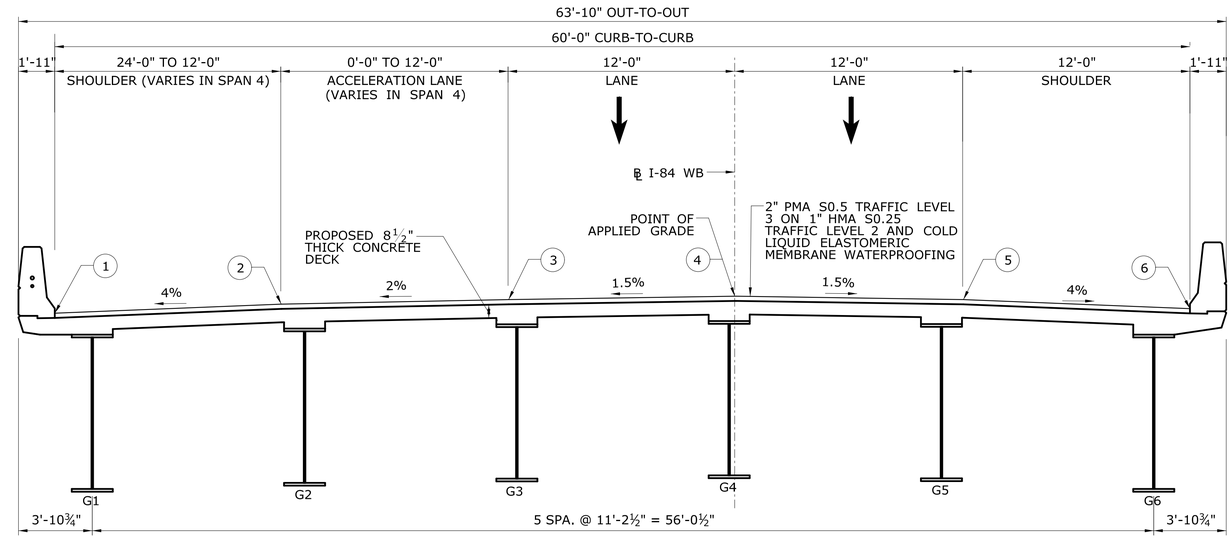

LOCATION OF FINISHED GRADE ELEVATIONS

SCALE: N.T.S.

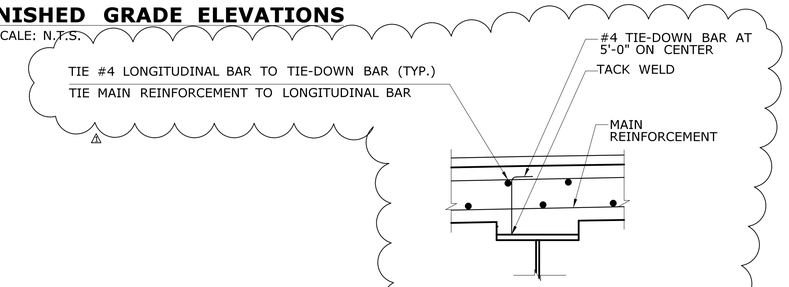

TIE-DOWN FOR SLAB REINFORCEMENT

SCALE: N.T.S.

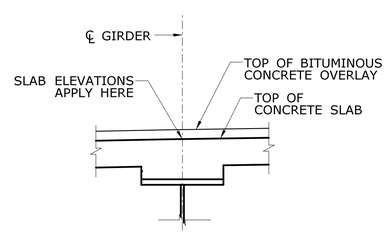

SLAB ELEVATION DETAIL

SCALE: N.T.S.

FINISHED GRADE ELEVATIONS *						
	WEST GUTTER LINE	WEST SHLDR. LINE	P.A.G. LINE	EAST C/S LINE	EAST SHLDR. LINE	EAST GUTTER LINE
	①	②	③	④	⑤	⑥
BRIDGE BEGIN ABUT. 1	140.99	141.47	141.94	142.42	142.89	142.53
CL BRG & CL PIER 1	140.61	141.09	141.33	141.51	141.56	141.08
CL BRG & CL PIER 2	139.39	139.87	140.11	140.29	140.11	139.63
CL BRG & CL PIER 3	138.18	138.66	138.90	139.08	138.90	138.42
BRIDGE END ABUT. 2	137.27	137.75	137.99	138.17	137.99	137.51

* APPLIES AT TOP OF WEARING SURFACE

L = SPAN LENGTHS, 168'-0" SPANS 1 & 4 AND 224'-0" SPANS 2 & 3
AB 1 = ABUTMENT 1
AB 2 = ABUTMENT 2

ADDENDUM NO. 1

REV.	DATE	REVISION DESCRIPTION	SHEET NO.
1	1/14/20	TEXT AND DIMENSIONS REVISED	04.01.38.A1

THE INFORMATION, INCLUDING ESTIMATED QUANTITIES OF WORK, SHOWN ON THESE SHEETS IS BASED ON LIMITED INVESTIGATIONS BY THE STATE AND IS IN NO WAY WARRANTED TO INDICATE THE CONDITIONS OF ACTUAL QUANTITIES OF WORK WHICH WILL BE REQUIRED.

Plotted Date: 1/17/2020

DESIGNER/DRAFTER: CS
CHECKED BY: BY
SCALE AS NOTED

STATE OF CONNECTICUT
DEPARTMENT OF TRANSPORTATION

Filename: ...\SB_MSTL_0096_0201_SLAB ELEV_WB.dgn

SIGNATURE/BLOCK: STATE OF CONNECTICUT THOMAS A. HARLEY 0014890 LICENSED PROFESSIONAL ENGINEER

LOUIS BERGER US
A WSP COMPANY
55 CAPITAL BOULEVARD
ROCKY HILL, CT 06067

PROJECT TITLE:
REHABILITATION OF BRIDGE NO. 04180 - I-84 WB OVER HOUSATONIC RIVER

TOWN: **NEWTOWN/SOUTHBURY**

DRAWING TITLE: **SLAB ELEVATIONS**

PROJECT NO. **96-201**
DRAWING NO. **S-38**
SHEET NO. **04.01.38.A1**

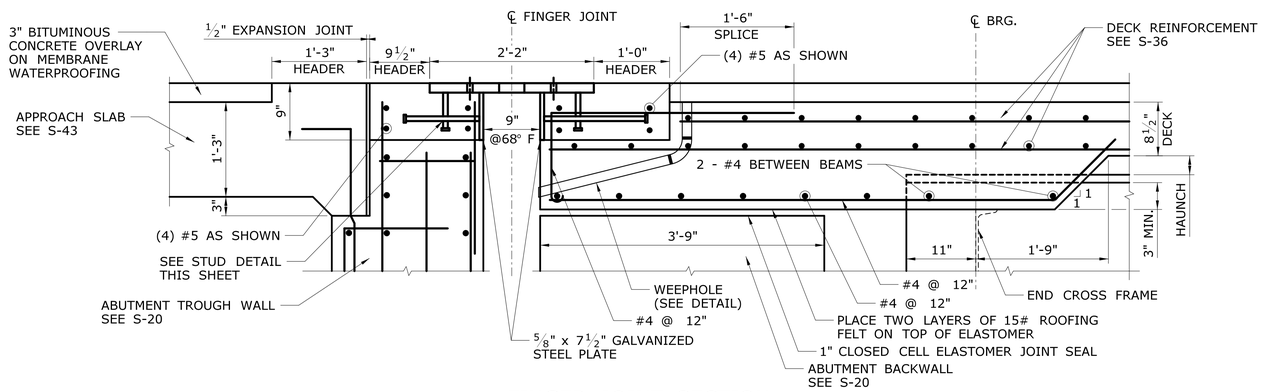

FINGER JOINT SECTION

SCALE: 1" = 1'-0"

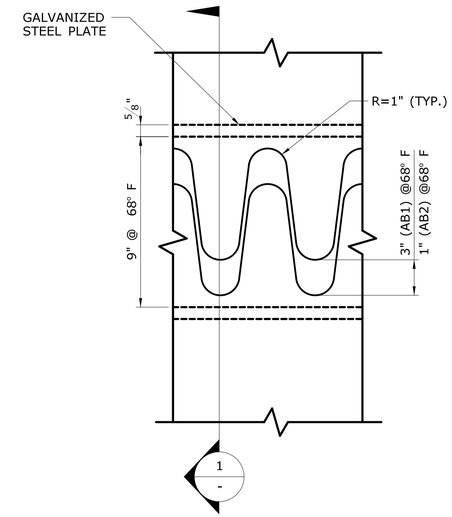

TOOTH PLATE DETAIL

SCALE: 3" = 1'-0"

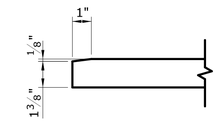

1 - SECTION

SCALE: 3" = 1'-0"

NOTE:
1. TOOTH PLATE SHALL BE MADE BY A SINGLE CUT OF A MACHINE GUIDED TORCH. SHARP CORNERES SHALL BE REMOVED BY GRINDING.

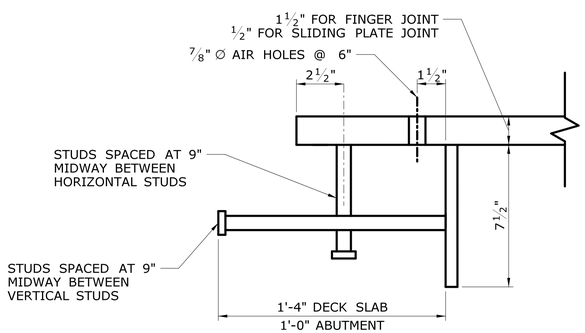

STUD DETAIL

SCALE: 3" = 1'-0"

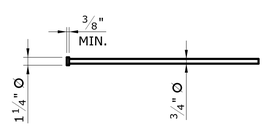

TYPICAL STUD

SCALE: 3" = 1'-0"

NOTE:
1. ALL VERTICAL STUDS SHALL BE ¾" ∅ x 6" LONG.
2. HORIZONTAL STUDS IN ABUTMENT TROUGH WALL SHALL BE ¾" ∅ x 1'-0" LONG.
3. HORIZONTAL STUDS IN DECK SLAB SHALL BE ¾" ∅ x 1'-4" LONG.

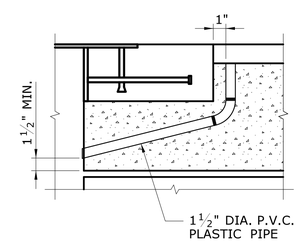

WEEPHOLE DETAIL

SCALE: 1" = 1'-0"

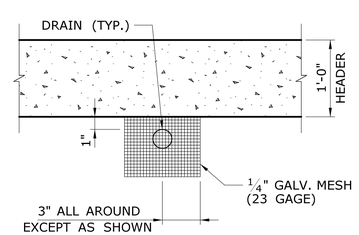

WEEPHOLE DRAIN DETAIL

NOT TO SCALE

NOTES

1. WORK THIS SHEET WITH S-40.
2. STEEL SHALL CONFORM TO AASHTO A709, GRADE 50 (GALVANIZED).
3. WELDING DETAILS, PROCEDURES AND TESTING METHODS SHALL CONFORM TO THE ANSI/AASHTO/AWS D1.5M/D1.5:2016 BRIDGE WELDING CODE WITH INTERIM REVISIONS, UNLESS OTHERWISE NOTED.
4. USE FLATHEAD STAINLESS STEEL ASTM F 593 TYPE 304 FOR COUNTERSUNK SCREWS WITH INSERTS. ALL CONCRETE INSERTS AND COUNTERSUNK MACHINE SCREWS ARE ¾" DIA. UNLESS OTHERWISE NOTED.
5. ALL BOLTS SHALL BE ASTM F3125 GRADE A325 TYPE 3 BOLTS IN STANDARD HOLES UNLESS OTHERWISE NOTED.
6. CONSTRUCT EXPANSION FINGER JOINT ASSEMBLY TO MATCH ROADWAY GRADE AND CROSS SLOPE.
7. PLACE CONCRETE UNDER THE FINGER JOINT ASSEMBLY AND VIBRATE UNTIL THE CONCRETE IS FORCED UP THROUGH THE ⅞" DIA. AIR HOLES. STRIKE OFF EXCESS CONCRETE. AFTER CONCRETE HAS CURED, INSPECT THE HOLES AND REMOVE UNSOUND CONCRETE. CLEAN THE HOLES WITH AN AIR JET AND FILL WITH APPROVED SEALER.
8. SET FINGER JOINT ASSEMBLY AFTER ADJACENT DECKS HAVE BEEN PLACED. DO NOT PLACE CONCRETE IN TOP OF ABUTMENT BACKWALLS UNTIL THE BEAMS, FINGER JOINTS AND DECK SLAB HAVE BEEN PLACED.
9. GRIND ALL EDGES EXPOSED TO TRAFFIC OR PEDESTRIANS TO 3/16" MIN. RADIUS.
10. CONCRETE HEADERS SHALL BE PCC04462 CONCRETE, AND WILL BE INCLUDED UNDER ITEM #0520902A - INSTALLATION OF FINGER JOINTS.
11. THE COST OF FURNISHING AND INSTALLING THE GALVANIZED MESH SHALL BE INCLUDED IN THE PAY ITEM "HMA S0.25".
12. THE COST OF INSTALLING THE WEEPHOLE IN THE CONCRETE DECK SHALL BE INCLUDED IN THE COST FOR "BRIDGE DECK CONCRETE (SIP FORMS)".
13. 1½" PVC PIPE DRAINS TO BE PLACED THROUGH THE SLAB WHERE SHOWN ON THE DECK PLAN. COST OF PIPE DRAIN SHALL BE INCLUDED UNDER THE ITEM "1½" POLYVINYL-CHLORIDE PLASTIC PIPE".

ADDENDUM NO. 1

REV.	DATE	REVISION DESCRIPTION	SHEET NO.
1	01/17/2020	TYPO REVISED	04.01.39.A1

THE INFORMATION, INCLUDING ESTIMATED QUANTITIES OF WORK, SHOWN ON THESE SHEETS IS BASED ON LIMITED INVESTIGATIONS BY THE STATE AND IS IN NO WAY WARRANTED TO INDICATE THE CONDITIONS OF ACTUAL QUANTITIES OF WORK WHICH WILL BE REQUIRED.

Plotted Date: 1/17/2020

DESIGNER/DRAFTER: CS
CHECKED BY: JPM
SCALE AS NOTED

STATE OF CONNECTICUT
DEPARTMENT OF TRANSPORTATION

Filename: ...\SB_MSTL_0096_0201_FINGER JOINT DET_WB.dgn

SIGNATURE/BLOCK: STATE OF CONNECTICUT · THOMAS A. HARLEY · 0014890 · LICENSED PROFESSIONAL ENGINEER

LOUIS BERGER US
A WSP COMPANY
55 CAPITAL BOULEVARD
ROCKY HILL, CT 06067

PROJECT TITLE:
REHABILITATION OF BRIDGE NO. 04180 - I-84 WB OVER HOUSATONIC RIVER

TOWN: **NEWTOWN/SOUTHBURY**

DRAWING TITLE: **FINGER JOINT DETAILS**

PROJECT NO. **96-201**
DRAWING NO. **S-39**
SHEET NO. **04.01.39.A1**

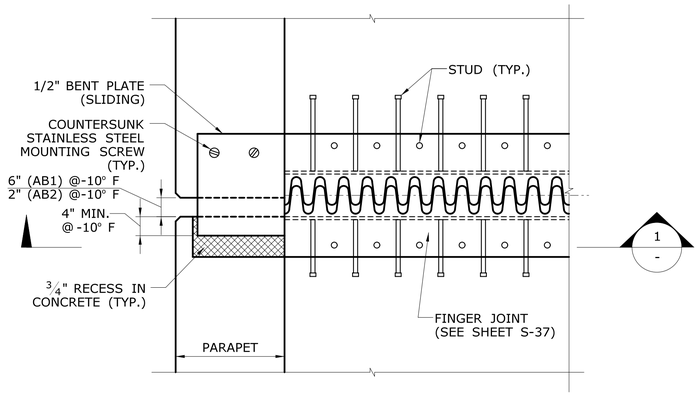

SLIDING PLATE EXPANSION JOINT FASCIA PARAPET PLAN

SCALE: 3/4" = 1'-0"

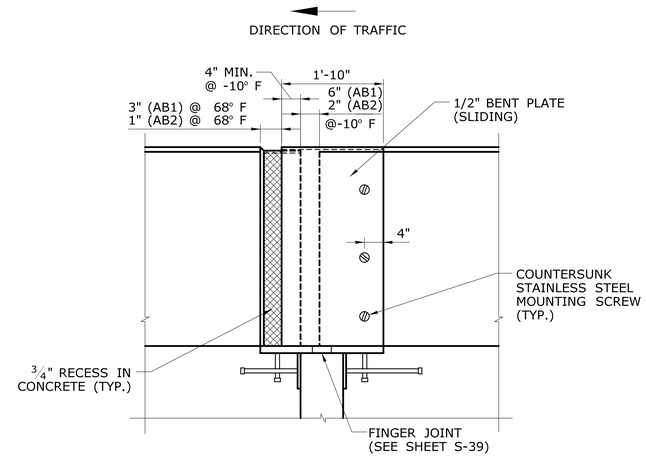

2 / - SECTION

SCALE: 3/4" = 1'-0"

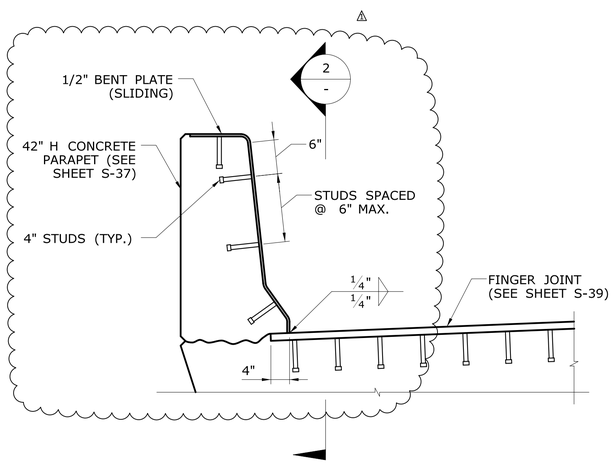

1 / - SECTION

SCALE: 3/4" = 1'-0"

NOTES:

1. WORK THIS SHEET WITH S-39.
2. SLIDING PLATES SHALL BE PAID FOR UNDER THE ITEM "INSTALLATION OF FINGER JOINTS".

ADDENDUM NO. 1

REV.	DATE	REVISION DESCRIPTION	SHEET NO.
1	1/14/20	PARAPET REVISIONS	04.01.40.A1

THE INFORMATION, INCLUDING ESTIMATED QUANTITIES OF WORK, SHOWN ON THESE SHEETS IS BASED ON LIMITED INVESTIGATIONS BY THE STATE AND IS IN NO WAY WARRANTED TO INDICATE THE CONDITIONS OF ACTUAL QUANTITIES OF WORK WHICH WILL BE REQUIRED.

Plotted Date: 1/29/2020

DESIGNER/DRAFTER: CS

CHECKED BY: JMK

SCALE AS NOTED

STATE OF CONNECTICUT
DEPARTMENT OF TRANSPORTATION

Filename: ...\SB_MSTL_0096_0201_PARAPET EXPANSION JOINT DET_WB.dgn

SIGNATURE/BLOCK: STATE OF CONNECTICUT THOMAS A. FARRELL 001480 LICENSED PROFESSIONAL ENGINEER

LOUIS BERGER US
A WSP COMPANY
55 CAPITAL BOULEVARD
ROCKY HILL, CT 06067

PROJECT TITLE:
REHABILITATION OF BRIDGE NO. 04180 - I-84 WB OVER HOUSATONIC RIVER

TOWN: **NEWTOWN/SOUTHBURY**

DRAWING TITLE: **PARAPET EXPANSION JOINT DETAILS**

PROJECT NO. **96-201**

DRAWING NO. **S-40**

SHEET NO. **04.01.40.A1**

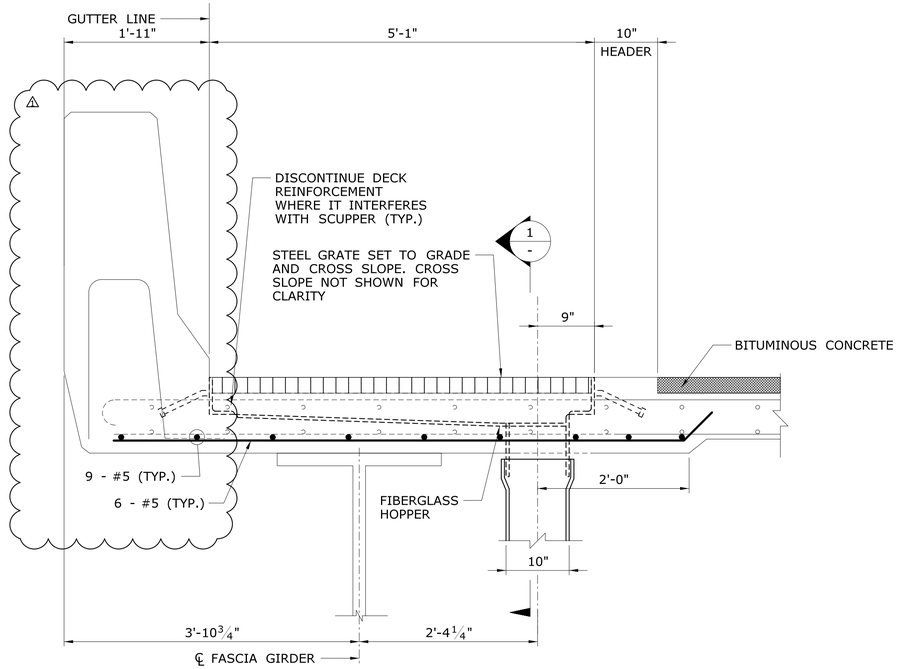

FASCIA SCUPPER SECTION

SCALE: 1" = 1'-0"

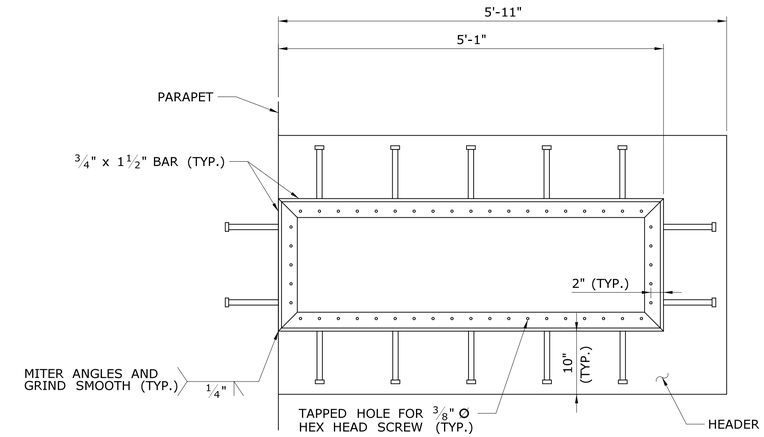

PLAN AT FRAME

SCALE: 1" = 1'-0"

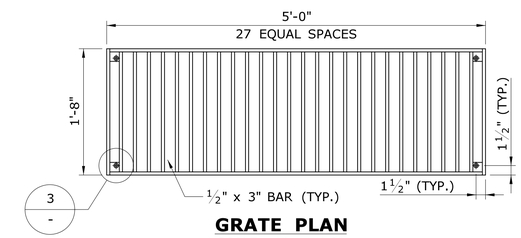

GRATE PLAN

SCALE: 1" = 1'-0"

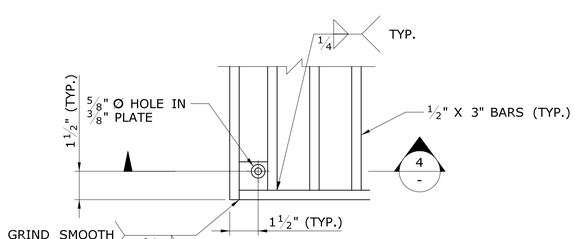

DETAIL

3 -

SCALE: 3" = 1'-0"

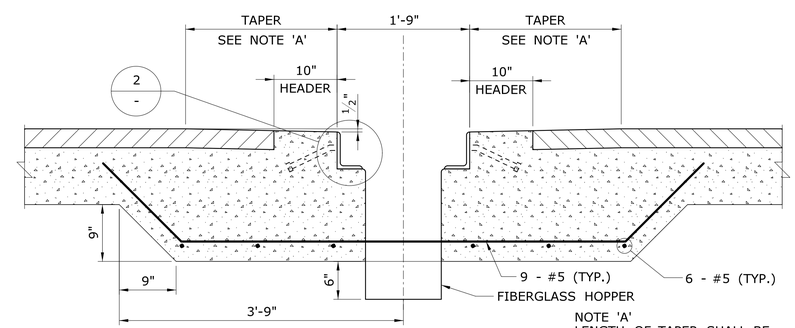

SECTION

1 -

SCALE: 1" = 1'-0"

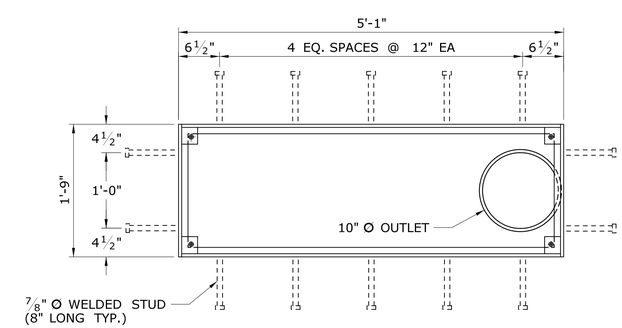

SCUPPER BASIN

SCALE: 1" = 1'-0"

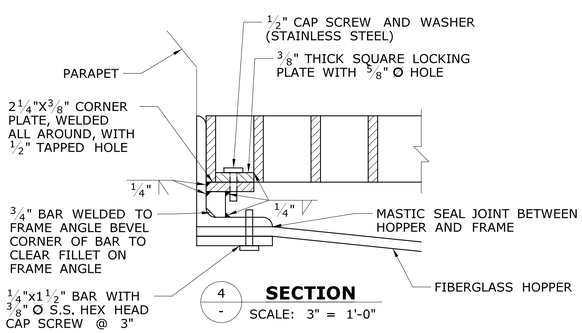

SECTION

4 -

SCALE: 3" = 1'-0"

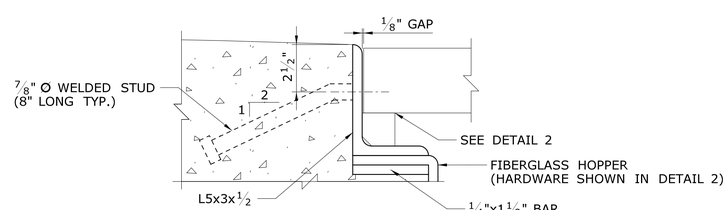

DETAIL

2 -

SCALE: 3" = 1'-0"

NOTES:

1. SCUPPERS, GRATING AND ALL ASSOCIATED HARDWARE TO BE PAID FOR UNDER ITEM "BRIDGE SCUPPER - TYPE A". ~~SEE SPECIAL PROVISIONS~~
2. ~~DRAINAGE PIPE, PIPE SUPPORTS AND ALL ASSOCIATED HARDWARE TO BE PAID FOR UNDER THE APPROPRIATE PIPE FOR BRIDGE DRAINAGE ITEM. SEE SPECIAL PROVISIONS~~
3. ~~ALL GRATING, FRAME, STUDS, HARDWARE AND ATTACHMENTS~~ SHALL BE GALVANIZED IN ACCORDANCE WITH ASTM A123 OR A153 AS APPROPRIATE.

ADDENDUM NO. 1

REV.	DATE	REVISION DESCRIPTION	SHEET NO.
1	01/16/2020	REVISED PARAPET SHAPE	04.01.41.A1

THE INFORMATION, INCLUDING ESTIMATED QUANTITIES OF WORK, SHOWN ON THESE SHEETS IS BASED ON LIMITED INVESTIGATIONS BY THE STATE AND IS IN NO WAY WARRANTED TO INDICATE THE CONDITIONS OF ACTUAL QUANTITIES OF WORK WHICH WILL BE REQUIRED.

Plotted Date: 2/8/2020

DESIGNER/DRAFTER: CS

CHECKED BY: JPM

SCALE AS NOTED

STATE OF CONNECTICUT
DEPARTMENT OF TRANSPORTATION

Filename: ..\SB_MSTL_0096_0201_SCUPPER_DET 1 - WB.dgn

SIGNATURE/BLOCK: STATE OF CONNECTICUT THOMAS A. HARLEY 001490 LICENSED PROFESSIONAL ENGINEER

LOUIS BERGER US
A WSP COMPANY
55 CAPITAL BOULEVARD
ROCKY HILL, CT 06067

PROJECT TITLE:
REHABILITATION OF BRIDGE NO. 04180 - I-84 WB OVER HOUSATONIC RIVER

TOWN: **NEWTOWN/SOUTHBURY**

DRAWING TITLE: **SCUPPER DETAILS - 1**

PROJECT NO. **96-201**

DRAWING NO. **S-41**

SHEET NO. **04.01.41.A1**

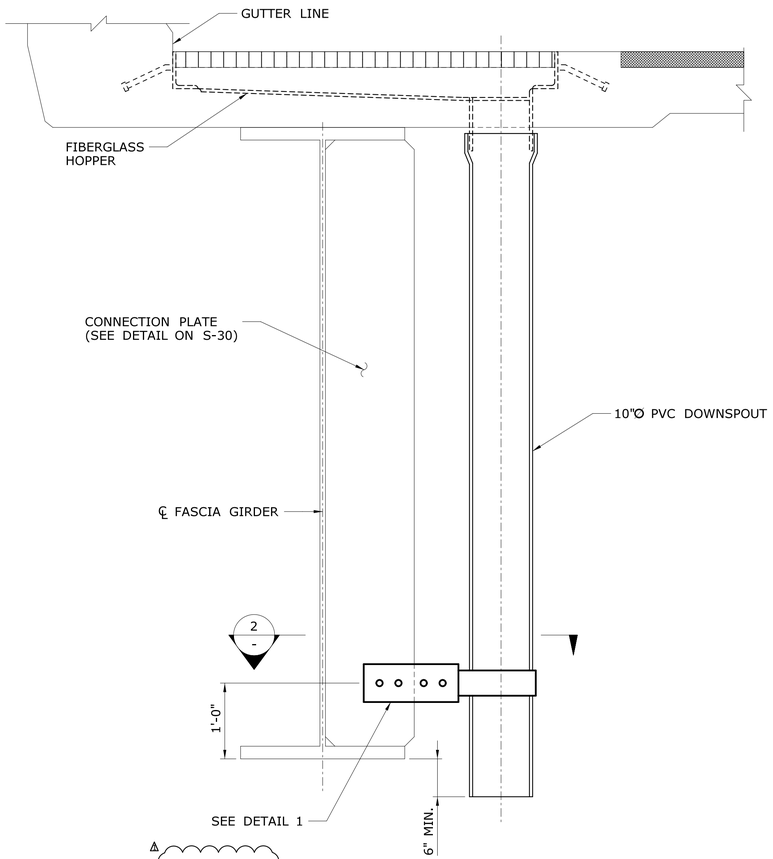

BRIDGE SCUPPER CONNECTION DETAIL
SCALE: 1" = 1'-0"

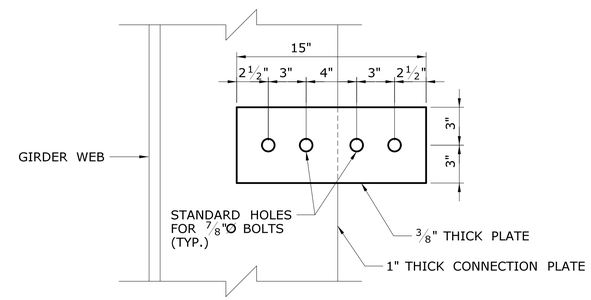

1 - **DETAIL**
SCALE: ½" = 1'-0"

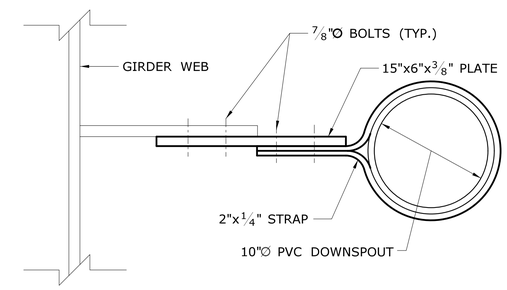

2 - **SECTION**
SCALE: ½" = 1'-0"

NOTES:

1. WORK THIS SHEET WITH S-41.

ADDENDUM NO. 1

REV.	DATE	REVISION DESCRIPTION	SHEET NO.
1	1/14/20	DETAIL TITLE REVISION	04.01.42.A1

THE INFORMATION, INCLUDING ESTIMATED QUANTITIES OF WORK, SHOWN ON THESE SHEETS IS BASED ON LIMITED INVESTIGATIONS BY THE STATE AND IS IN NO WAY WARRANTED TO INDICATE THE CONDITIONS OF ACTUAL QUANTITIES OF WORK WHICH WILL BE REQUIRED.

Plotted Date: 1/17/2020

DESIGNER/DRAFTER: CS
CHECKED BY: JPM
SCALE AS NOTED

STATE OF CONNECTICUT
DEPARTMENT OF TRANSPORTATION

Filename: ...\SB_MSTL_0096_0201_SCUPPER DET 2 - WB.dgn

SIGNATURE/BLOCK: STATE OF CONNECTICUT THOMAS A HASLEY 0014890 LICENSED PROFESSIONAL ENGINEER

LOUIS BERGER US
A WSP COMPANY
55 CAPITAL BOULEVARD
ROCKY HILL, CT 06067

PROJECT TITLE:
REHABILITATION OF BRIDGE NO. 04180 - I-84 WB OVER HOUSATONIC RIVER

TOWN: **NEWTOWN/SOUTHBURY**

DRAWING TITLE: **SCUPPER DETAILS - 2**

PROJECT NO. **96-201**
DRAWING NO. **S-42**
SHEET NO. **04.01.42.A1**

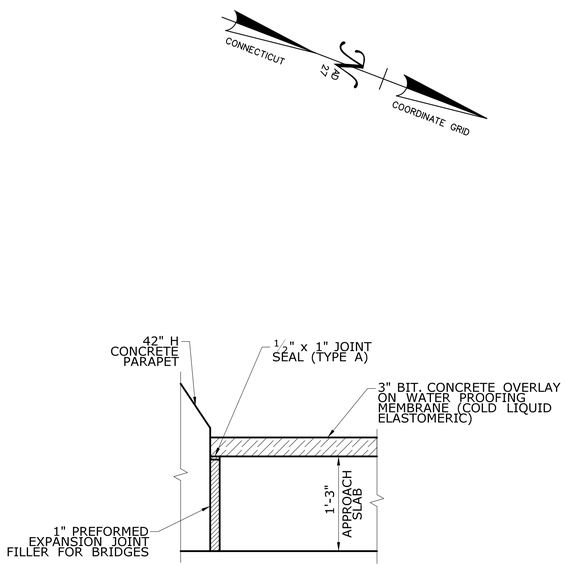

1 - **EXPANSION JOINT DETAIL**
SCALE: 1" = 1'-0"

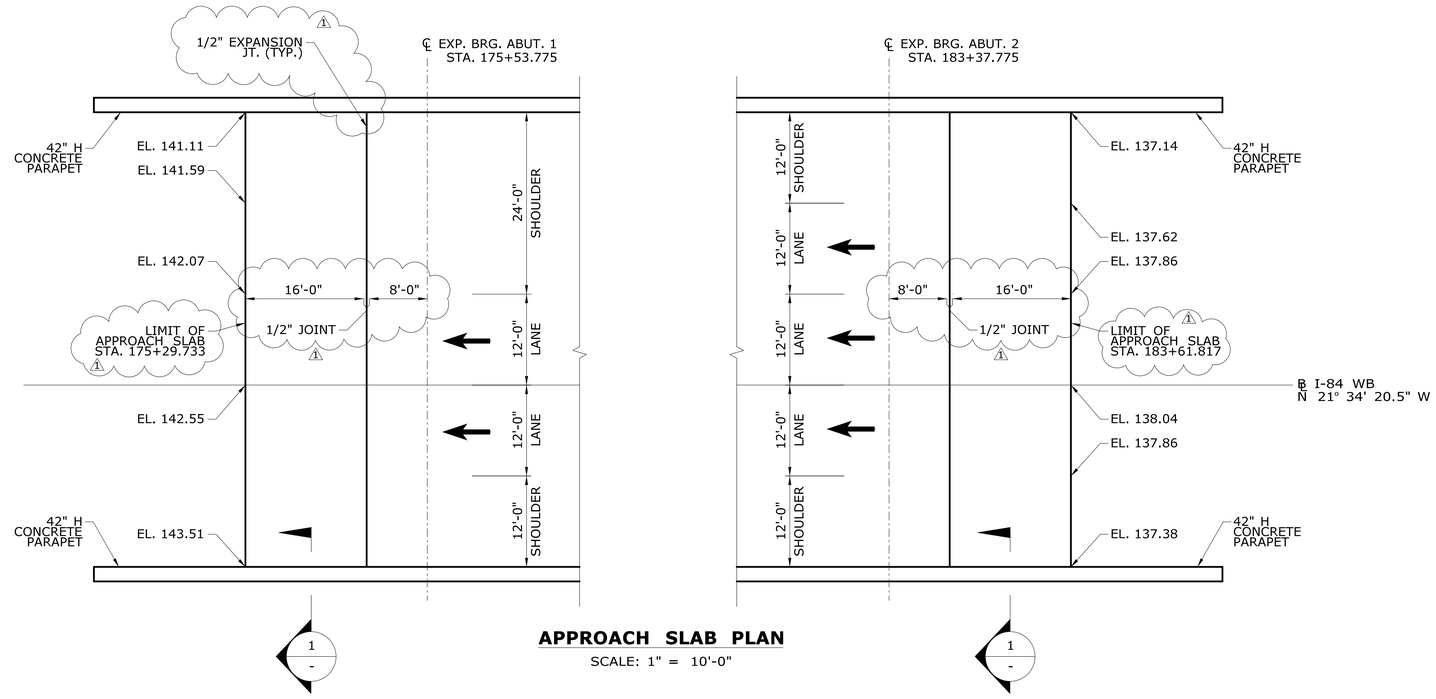

1 - **APPROACH SLAB PLAN**
SCALE: 1" = 10'-0"

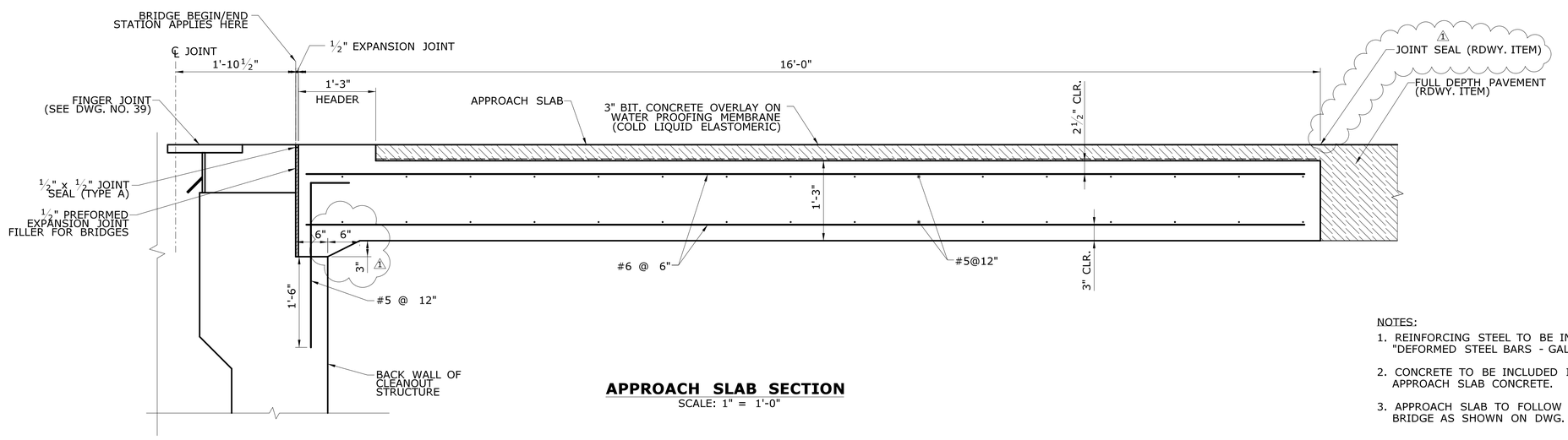

APPROACH SLAB SECTION
SCALE: 1" = 1'-0"

NOTES:

1. REINFORCING STEEL TO BE INCLUDED IN THE ITEM "DEFORMED STEEL BARS - GALVANIZED".
2. CONCRETE TO BE INCLUDED IN THE ITEM FOR APPROACH SLAB CONCRETE.
3. APPROACH SLAB TO FOLLOW CROSS SECTION OF BRIDGE AS SHOWN ON DWG. NO. S-04.

ADDENDUM NO. 1

REV.	DATE	REVISION DESCRIPTION	SHEET NO.
1	1/29/2020	REVISED STATIONS, DIMENSIONS	04.01.43.A1

THE INFORMATION, INCLUDING ESTIMATED QUANTITIES OF WORK, SHOWN ON THESE SHEETS IS BASED ON LIMITED INVESTIGATIONS BY THE STATE AND IS IN NO WAY WARRANTED TO INDICATE THE CONDITIONS OF ACTUAL QUANTITIES OF WORK WHICH WILL BE REQUIRED.

Plotted Date: 1/29/2020

DESIGNER/DRAFTER: CS
CHECKED BY: BY
SCALE AS NOTED

STATE OF CONNECTICUT
DEPARTMENT OF TRANSPORTATION

Filename: ...\SB_MSTL_0096_0201_APPROACH SLAB_WB.dgn

SIGNATURE/BLOCK: STATE OF CONNECTICUT THOMAS A. FARLEY 001480 LICENSED PROFESSIONAL ENGINEER

LOUIS BERGER US
A WSP COMPANY
55 CAPITAL BOULEVARD
ROCKY HILL, CT 06067

PROJECT TITLE:
REHABILITATION OF BRIDGE NO. 04180 - I-84 WB OVER HOUSATONIC RIVER

TOWN: **NEWTOWN/SOUTHBURY**

DRAWING TITLE: **APPROACH SLAB DETAILS**

PROJECT NO. **96-201**
DRAWING NO. **S-43**
SHEET NO. **04.01.43.A1**

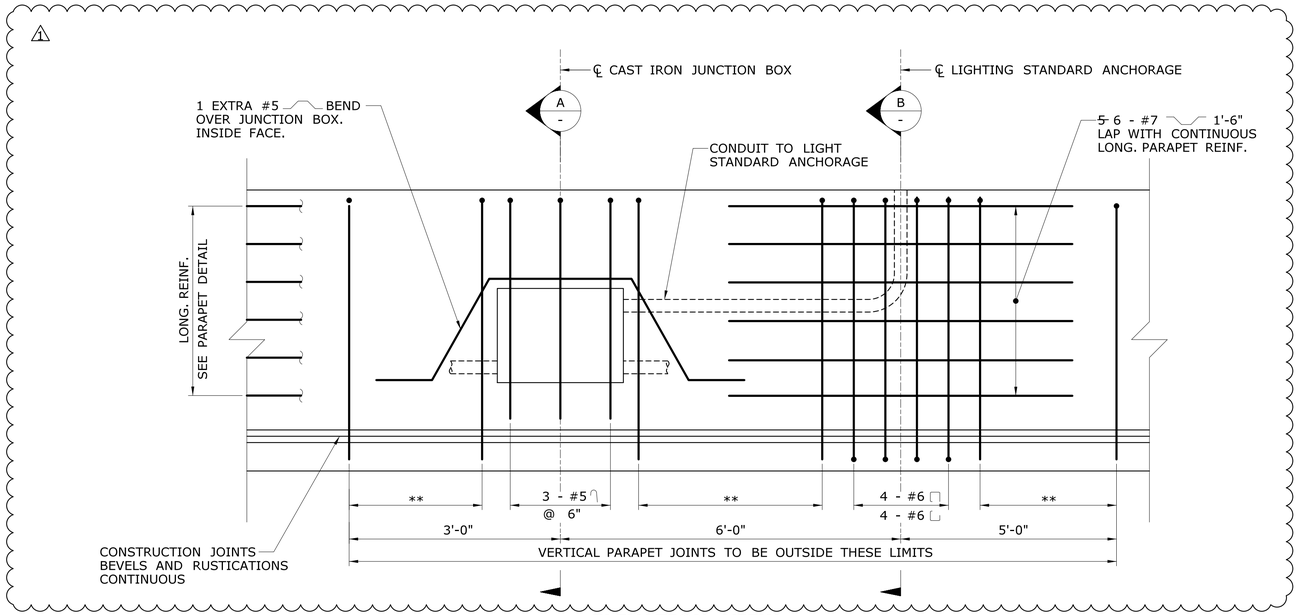

** VERTICAL PARAPET REINFORCEMENT TO BE ~~#5~~ #6 @ 6" WITHIN THESE LIMITS

ELEVATION VIEW

SCALE: 1" = 1'-0"

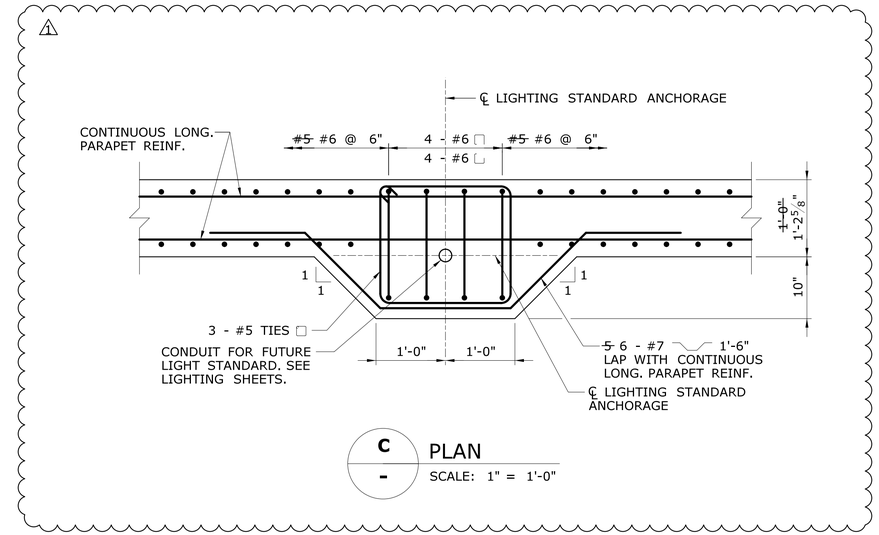

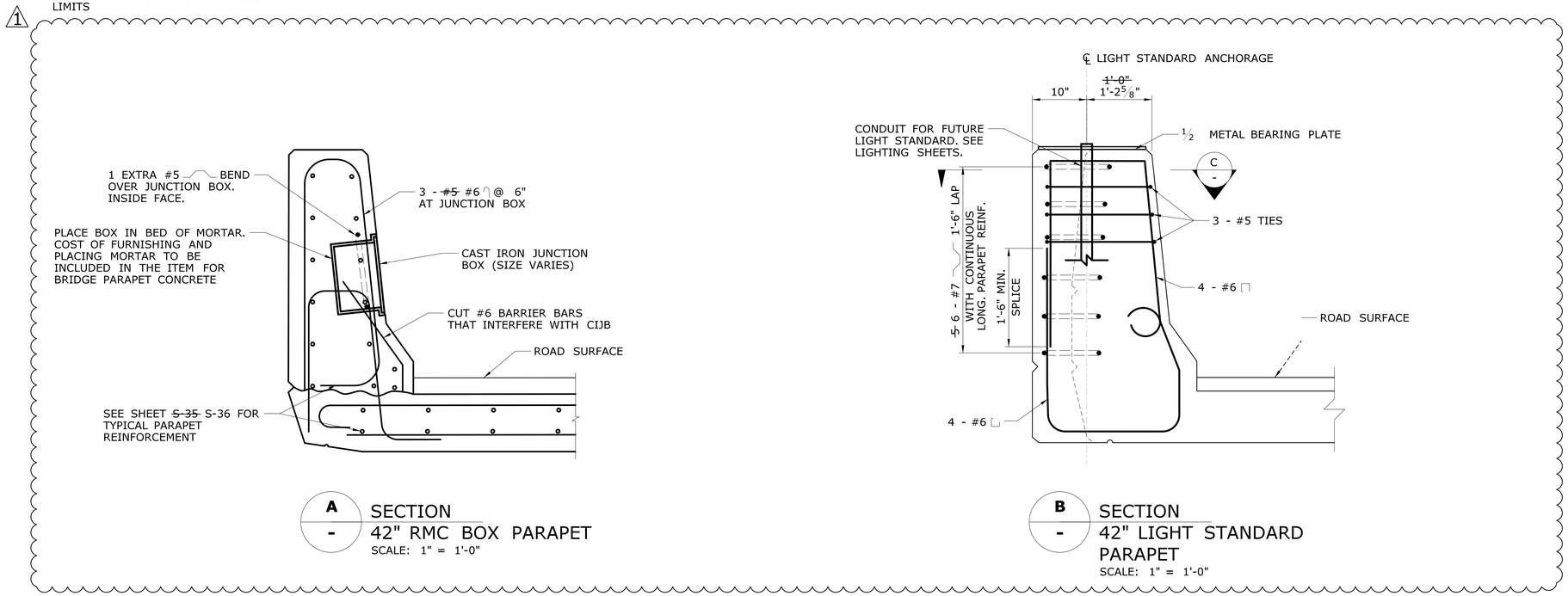

ADDENDUM NO. 1

REV.	DATE	REVISION DESCRIPTION	SHEET NO.
1	1/16/20	PARAPET AND REBAR REVISED	04.01.45.A1

THE INFORMATION, INCLUDING ESTIMATED QUANTITIES OF WORK, SHOWN ON THESE SHEETS IS BASED ON LIMITED INVESTIGATIONS BY THE STATE AND IS IN NO WAY WARRANTED TO INDICATE THE CONDITIONS OF ACTUAL QUANTITIES OF WORK WHICH WILL BE REQUIRED.

Plotted Date: 1/29/2020

DESIGNER/DRAFTER: AJM

CHECKED BY: CS

SCALE AS NOTED

STATE OF CONNECTICUT
DEPARTMENT OF TRANSPORTATION

Filename: ...\SB_MSTL_0096_0201_STRUCTURE RELATED ELECTRICAL DET - 2.dgn

SIGNATURE/BLOCK: STATE OF CONNECTICUT THOMAS A PARKER 0014850 LICENSED PROFESSIONAL ENGINEER

LOUIS BERGER US
A WSP COMPANY
55 CAPITAL BOULEVARD
ROCKY HILL, CT 06067

PROJECT TITLE:
REHABILITATION OF BRIDGE NO. 04180 - I-84 WB OVER HOUSATONIC RIVER

TOWN: **NEWTOWN/SOUTHBURY**

DRAWING TITLE: **STRUCTURE RELATED ELECTRICAL DETAILS - 2**

PROJECT NO. **96-201**

DRAWING NO. **S-45**

SHEET NO. **04.01.45.A1**

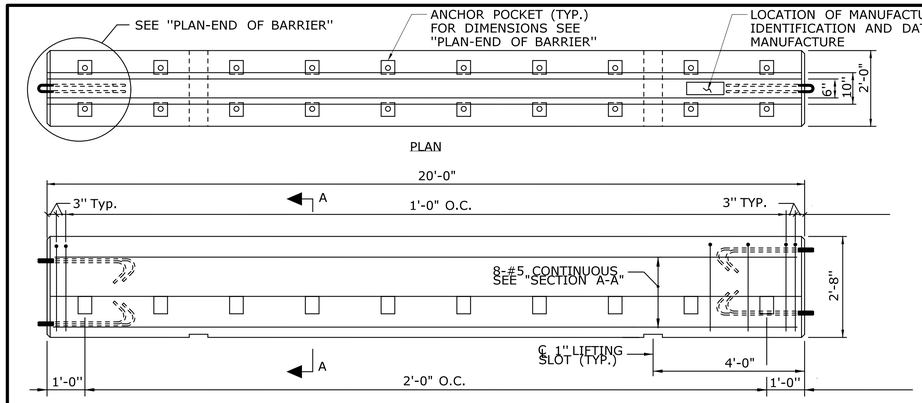

PRECAST BARRIER UNIT (STRUCTURE)

SCALE: "=1'-0"

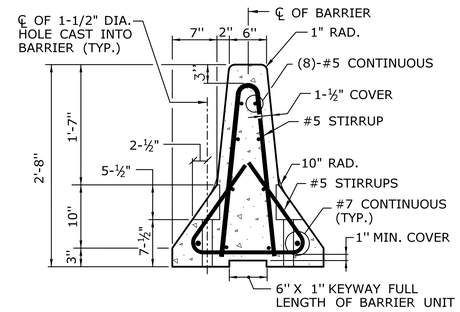

SECTION A-A

SCALE: 1"=1'-0"

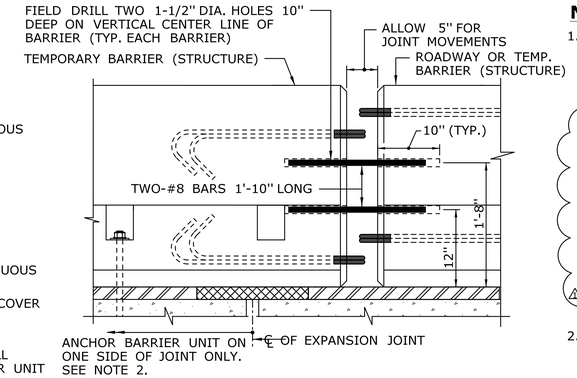

ELEVATION BARRIER CONNECTION DETAILS

AT EXPANSION JOINTS (CASE II SHOWN)

SCALE: 1"=1'-0"

NOTES:

1. THE TEMPORARY BARRIER SHOWN ON THIS SHEET SHALL BE ANCHORED ONTO BRIDGE DECKS (SEE "TEMPORARY ANCHORAGE SYSTEM") WHEN IT IS USED TO PROTECT A VERTICAL DROP-OFF. THE TEMPORARY ANCHORAGE SYSTEM SHALL CONFORM TO THE FOLLOWING:

   A) CHEMICAL ANCHORING: ~~THIS SHALL BE USED DURING STAGE 3 WHEN ANCHORING INTO THE EXISTING BRIDGE DECK.~~ THIS CONSISTS OF DRILLING HOLES IN NEW OR EXISTING CONCRETE, PLACING THREADED ANCHORS IN THE HOLES, AND SECURING THE ANCHORS WITH A PRE-APPROVED CHEMICAL ANCHOR MATERIAL WHICH CONFORMS TO M.03.01-15 OF THE STANDARD SPECIFICATIONS. HOLE DIAMETER SHALL BE DETERMINED BY THE MANUFACTURER OF THE CHEMICAL ANCHORING MATERIAL.

   B) THROUGH-BOLTING: ~~THIS SHALL BE USED DURING STAGE 4 WHEN ANCHORING INTO THE NEW PBU BRIDGE DECK.~~ THIS CONSISTS OF DRILLING THROUGH DECK SLABS AND SECURING REMOVABLE ANCHORS ON THE UNDERSIDE WITH PLATE WASHERS AND NUTS. MAXIMUM HOLE SIZE IN SLAB = 1-½". THROUGH-BOLTING IS NOT PERMITTED ON NEW CONSTRUCTION.

2. NUMBER OF ANCHORS: ON THE TRAFFIC SIDE OF A TYPICAL BARRIER, ANCHORS SHALL BE INSTALLED IN ALL POCKETS. AT BARRIER UNITS WHICH STRADDLE BRIDGE EXPANSION JOINTS THE ANCHOR AND CONNECTION DETAILS SHALL CONFORM TO TABLE "A".

3. THE WORK DONE ON THIS SHEET, WITH THE EXCEPTION OF THE DELINEATORS, SHALL BE PAID FOR UNDER THE ITEM "TEMPORARY PRECAST CONCRETE BARRIER CURB (STRUCTURE)".

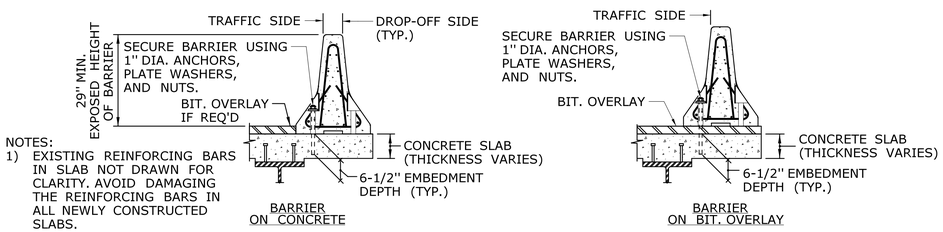

NOTES:
1) EXISTING REINFORCING BARS IN SLAB NOT DRAWN FOR CLARITY. AVOID DAMAGING THE REINFORCING BARS IN ALL NEWLY CONSTRUCTED SLABS.

CHEMICAL ANCHORING OPTION
(SEE NOTE 1A)

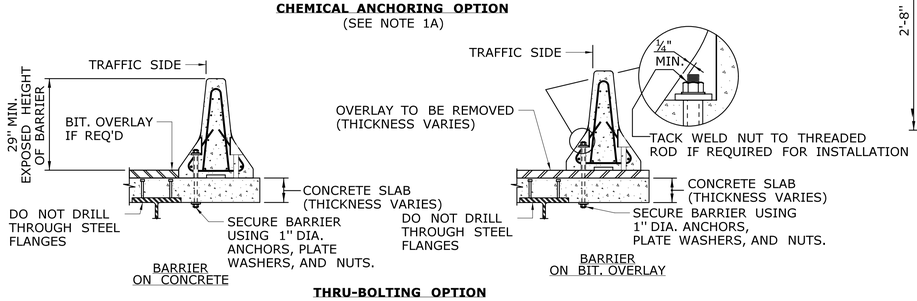

THRU-BOLTING OPTION
(SEE NOTE 1B)

TEMPORARY ANCHORAGE SYSTEM

SCALE: ½"=1'-0"

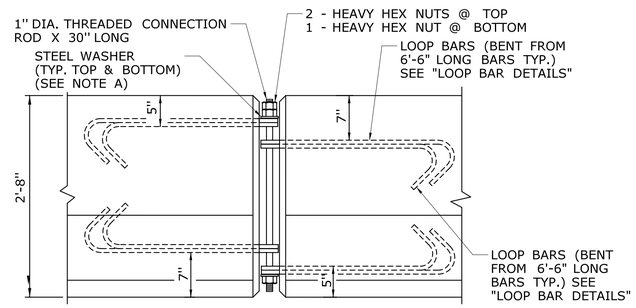

ELEVATION

BARRIER CONNECTION DETAILS

Scale: 1"=1'-0"

TABLE "A": BARRIER UNITS AT EXP. JOINTS

CASE	SPAN LENGTH CONTRIBUTING TO MOVEMENT AT THE EXPANSION JOINT.	METHOD OF END CONNECTION TO ABUTTING BARRIER UNIT. (WHERE MOVEMENT WILL OCCUR)	ANCHOR REQUIREMENTS FOR THE BARRIER UNIT WHICH STRADDLES THE BRIDGE JOINT
I.	UP TO 100'	USE 1" CONNECTION ROD BUT DO NOT OVER TIGHTEN THE NUTS AND ALLOW ROOM FOR EXPANSION AROUND THE ROD AND LOOPS.	ON ONE SIDE OF THE JOINT ONLY, INSTALL AS MANY ANCHORS AS POSSIBLE ON THE TRAFFIC SIDE OF THE BARRIER. ON THE OTHER SIDE OF THE JOINT DO NOT INSTALL ANCHORS.
II.	100' TO 400'	FIELD DRILL HOLES IN ENDS OF BOTH UNITS AND CONNECT WITH 2-#8 BARS. FOR DETAILS SEE "BARRIER CONNECTION DETAILS".	ON ONE SIDE OF THE JOINT ONLY, INSTALL A TOTAL OF 10 ANCHORS. FILL THE POCKETS ON THE TRAFFIC SIDE BEFORE FILLING THE POCKETS ON THE DROP-OFF SIDE. IF THIS CANNOT BE ACHIEVED SEE III BELOW.
III.	OVER 400' AND BARRIER LAYOUTS WHICH DO NOT SATISFY II.	TO BE DESIGNED BY THE CONTRACTOR AND REVIEWED BY ENGINEER. COST OF DESIGNING AND FURNISHING SPECIAL BARRIER UNITS OR ATTACHMENTS PAID FOR UNDER "TPCBC (STRUCTURE)".	TO BE DESIGNED BY CONTRACTOR AND REVIEWED BY ENGINEER. COST OF DESIGNING AND FURNISHING SPECIAL BARRIER UNITS OR ATTACHMENTS PAID FOR UNDER "TPCBC (STRUCTURE)".

NOTES FOR CONNECTION ROD DETAILS:

A. PLAIN CIRCULAR STEEL WASHERS SHALL BE MANUFACTURED WITH THE FOLLOWING DIMENSIONS:

   OUTSIDE DIAMETER = 2-¾" (+¼", -0")
   INSIDE DIAMETER = 1-¼" (±1/16")
   THICKNESS = 3/16"

B. THE NUTS ON THE CONNECTION ROD SHALL BE TURNED UNTIL THE BOTTOM WASHER IS DRAWN UP AGAINST THE LOOP BAR. THE LOOP BARS SHALL NOT BE BENT DUE TO THE TIGHTENING PROCESS.

C. FOR EASE OF REMOVAL THE THREADS ON THE CONNECTION RODS AND NUTS SHALL BE WAXED.

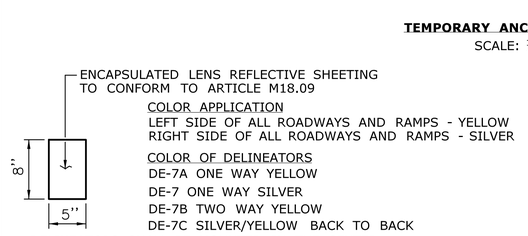

COLOR APPLICATION
LEFT SIDE OF ALL ROADWAYS AND RAMPS - YELLOW
RIGHT SIDE OF ALL ROADWAYS AND RAMPS - SILVER

COLOR OF DELINEATORS
DE-7A ONE WAY YELLOW
DE-7 ONE WAY SILVER
DE-7B TWO WAY YELLOW
DE-7C SILVER/YELLOW BACK TO BACK

DELINEATORS SHALL BE MOUNTED IN THE CENTER OF TEMPORARY BARRIERS AS REQUIRED.

SPACING OF DELINEATORS
ON LEADING TAPERED SECTIONS - EVERY UNIT (20').
ON THE FIRST 100' OF PARALLEL SECTIONS - EVERY UNIT (20').
ON THE REMAINING LENGTH - EVERY FIFTH (5TH) UNIT (100').
MINIMUM OF 2 IF LESS THAN 100'.
ALTERNATING ONE WAY TRAFFIC - EVERY UNIT (20').
ALL OTHER ROADWAYS SHALL BE DELINEATED IN ACCORDANCE WITH M.U.T.C.D.

DELINEATORS

N.T.S.

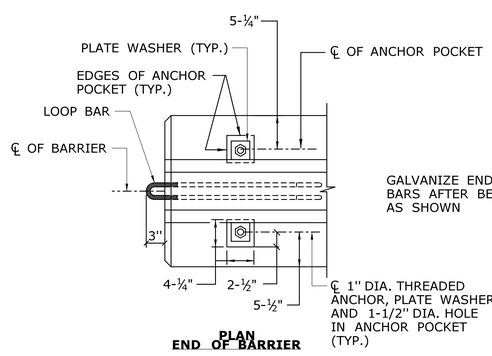

PLAN
END OF BARRIER

SCALE: 1"=1'-0"

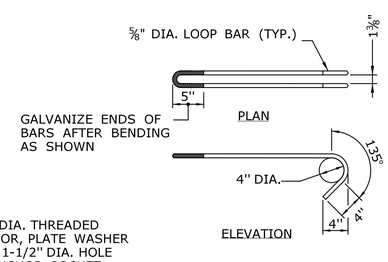

LOOP BAR DETAILS

SCALE: 1"=1'-0"

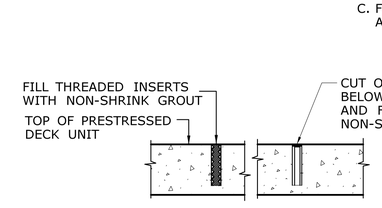

FILLING OF ANCHOR HOLES

SCALE: 1"=1'-0"

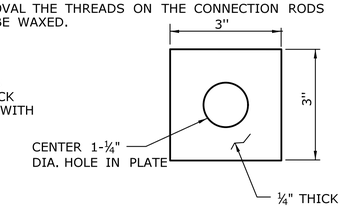

PLATE WASHER

N.T.S.

ADDENDUM NO. 1

REV.	DATE	REVISION DESCRIPTION	SHEET NO.
1	1/10/2020	DRAWING TITLE AND NOTE 1 REVISION	04.01.47.A1

THE INFORMATION, INCLUDING ESTIMATED QUANTITIES OF WORK, SHOWN ON THESE SHEETS IS BASED ON LIMITED INVESTIGATIONS BY THE STATE AND IS IN NO WAY WARRANTED TO INDICATE THE CONDITIONS OF ACTUAL QUANTITIES OF WORK WHICH WILL BE REQUIRED.

Plotted Date: 2/13/2020

DESIGNER/DRAFTER: CS
CHECKED BY: SS
SCALE AS NOTED

STATE OF CONNECTICUT
DEPARTMENT OF TRANSPORTATION

Filename: ...\SB_MSTL_0096_0201_TEMP PRECAST CONC BARRIER_WB.dgn

SIGNATURE/BLOCK: STATE OF CONNECTICUT THOMAS A. HARRIS 021450 LICENSED PROFESSIONAL ENGINEER

LOUIS BERGER US
A WSP COMPANY
55 CAPITAL BOULEVARD
ROCKY HILL, CT 06067

PROJECT TITLE:
REHABILITATION OF BRIDGE NO. 04180 - I-84 WB OVER HOUSATONIC RIVER

TOWN: **NEWTOWN/SOUTHBURY**

DRAWING TITLE: **TEMPORARY PRECAST CONCRETE BARRIER (STRUCTURE)**

PROJECT NO. **96-201**
DRAWING NO. **S-47**
SHEET NO. **04.01.47.A1**