04 - STRUCTURE
INDEX OF DRAWINGS

DRAWING NUMBER	DRAWING TITLE	DRAWING NUMBER	DRAWING TITLE
S-01	INDEX OF STRUCTURE DRAWINGS	S-21	DECK JOINT DETAILS - 5
S-02	PLAN AND ELEVATION	S-22	DECK JOINT DETAILS - 6
S-03	SECTION AND NOTES	S-23	DRAINAGE DETAILS
S-04	SPANS A & B		
S-05	SPANS C & D		
S-06	SPAN E		
S-07	SPANS F & G		
S-08	SPANS H & J		
S-09	STEEL REPAIR CRITERIA		
S-10	STEEL REPAIR DETAILS - 1		
S-11	STEEL REPAIR DETAILS - 2		
S-12	STEEL REPAIR DETAILS - 3		
S-13	STEEL REPAIR DETAILS - 4		
S-14	STEEL REPAIR CONSTRUCTION SEQUENCE		
S-15	DECK REPAIR DETAILS - 1		
S-16	DECK REPAIR DETAILS - 2		
S-17	DECK JOINT DETAILS - 1		
S-18	DECK JOINT DETAILS - 2		
S-19	DECK JOINT DETAILS - 3		
S-20	DECK JOINT DETAILS - 4		

DESIGNED BY:
ALFRED BENESCH & CO.

STATE OF CONNECTICUT
STEVEN J. DRECHSLER
No. 23441
LICENSED
PROFESSIONAL ENGINEER

Steven Drechsler
2019.11.26
16:07:53-05'00'

REV.	DATE	REVISION DESCRIPTION	SHEET NO.

THE INFORMATION, INCLUDING ESTIMATED QUANTITIES OF WORK, SHOWN ON THESE SHEETS IS BASED ON LIMITED INVESTIGATIONS BY THE STATE AND IS IN NO WAY WARRANTED TO INDICATE THE CONDITIONS OF ACTUAL QUANTITIES OF WORK WHICH WILL BE REQUIRED.

Plotted Date: 10/10/2019

DESIGNER/DRAFTER: M. HABEK
CHECKED BY: R. MEARS
-

STATE OF CONNECTICUT
DEPARTMENT OF TRANSPORTATION

Filename: ...\SB_MSH_Br03295_0139_0113_INDEX.dgn

SIGNATURE/BLOCK:
Alfred Benesch & Company
120 Hebron Avenue
2nd Floor
Glastonbury, CT

PROJECT TITLE:
REHABILITATION OF BRIDGE NO. 03295 - ROUTE 190 OVER CONNECTICUT RIVER & AMTRAK

TOWN: SUFFIELD/ENFIELD

DRAWING TITLE: INDEX OF STRUCTURE DRAWINGS

PROJECT NO. 139-113
DRAWING NO. S-01
SHEET NO. 4.01

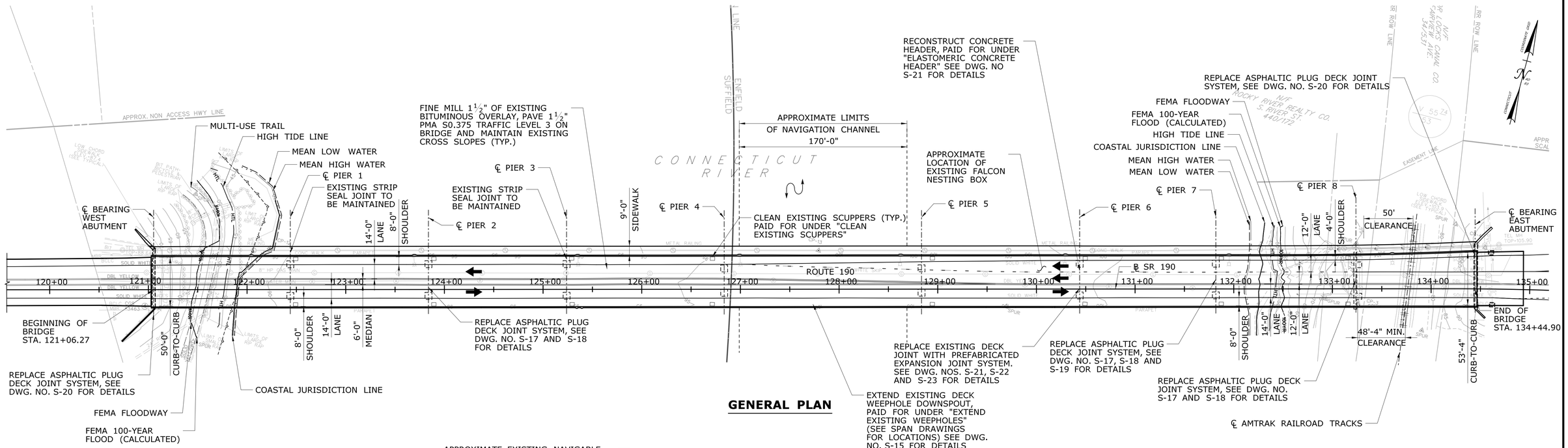

GENERAL PLAN

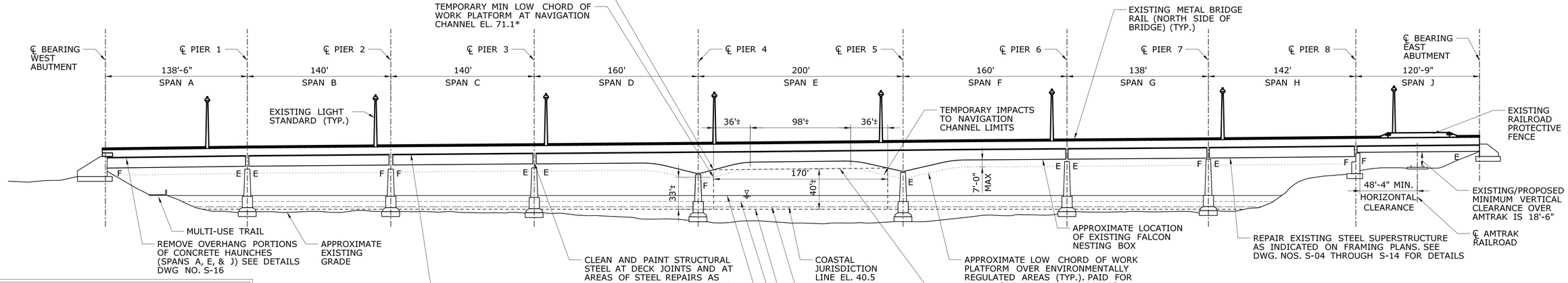

E - EXPANSION BEARING
F - FIXED BEARING

ELEVATION

*ELEVATION IS TAKEN FROM ORIGINAL DESIGN PLANS (NVGD 29) AND CONVERTED TO NAVD 88. ELEVATION IS APPROXIMATE AS THE LOW-CHORD WAS NOT SURVEYED FOR THIS PROJECT AND AS-BUILTS WERE NOT AVAILABLE.
**NOTE THAT NAVIGATION LIGHTS ARE NOT PRESENT AT THIS BRIDGE.

NOTICE TO BRIDGE INSPECTORS

THE DEPARTMENT'S BRIDGE SAFETY PROCEDURES REQUIRE THIS BRIDGE TO BE INSPECTED FOR, BUT NOT LIMITED TO, ALL APPROPRIATE COMPONENTS INDICATED IN THE GOVERNING MANUALS FOR BRIDGE INSPECTION. ATTENTION MUST BE GIVEN TO INSPECTING THE FOLLOWING SPECIAL COMPONENTS AND DETAILS. (THE LISTING FOR COMPONENTS FOR SPECIFIC ATTENTION SHALL NOT BE CONSTRUED TO REDUCE THE IMPORTANCE OF INSPECTION OF ANY OTHER COMPONENT OF THE STRUCTURE.) THE FREQUENCY OF INSPECTION OF THIS STRUCTURE SHALL BE IN ACCORDANCE WITH THE GOVERNING MANUALS FOR BRIDGE INSPECTION, UNLESS OTHERWISE DIRECTED BY THE MANAGER OF BRIDGE SAFETY AND EVALUATION.

COMPONENT OR DETAIL	STRUCTURE SHEET REFERENCE
N/A	N/A

INSPECTION OF FIELD WELDS

METHOD	UNIT	QUANTITY
ULTRASONIC	INCH	0
MAGNETIC PARTICLE	FEET	8

NOTES:

1. THE TOPSIDE OF THE WORK PLATFORMS AND PAINT CONTAINMENT SYSTEMS IN SPANS A-H SHALL BE INSTALLED AT 2' MINIMUM BELOW THE BOTTOM FLANGE OF THE MAIN GIRDERS.
2. THE LOW CHORD OF THE WORK PLATFORMS IN SPANS A-H SHALL BE LOCATED ABOVE THE 100 YEAR FEMA FLOOD ELEVATION (EL 51.6) AND SHALL BE LESS THAN 7' BELOW THE BOTTOM FLANGE OF THE MAIN GIRDERS.
3. THE WORK PLATFORM IN SPAN J SHALL NOT IMPACT THE HORIZONTAL AND VERTICAL AMTRAK RAILROAD CAR ENVELOPE. SHOULD A WORK PLATFORM BE REQUIRED WITHIN THE HORIZONTAL AND VERTICAL AMTRAK CAR ENVELOPE OR WITHIN AMTRAK RIGHT-OF-WAY, THE WORK PLATFORM SHALL NOT BE PLACED BELOW THE LOW CHORD OF THE BOTTOM FLANGE OF THE GIRDER.
4. ANY STAGING OR STORAGE LOCATIONS FOR EQUIPMENT, MATERIAL, AND DEBRIS FOR CONTRACTOR OPERATIONS, INCLUDING PAINT REMOVAL SHALL BE LOCATED ABOVE THE 100 YEAR FEMA FLOOD ELEVATION (EL. 51.6).
5. THE SAFETY BOAT LAUNCH AREA IS AT THE KINGS ISLAND BOAT LAUNCH, 49 PARSONS ROAD, ENFIELD, CT. THIS IS LOCATED APPROXIMATELY 1.9 MILES SOUTH OF THE PROJECT LOCATION. THE CONTRACTOR SHALL VERIFY THAT THIS LOCATION IS SUITABLE FOR SAFETY BOAT LAUNCH PRIOR TO THE START OF CONSTRUCTION.

REV.	DATE	REVISION DESCRIPTION	SHEET NO.

THE INFORMATION, INCLUDING ESTIMATED QUANTITIES OF WORK, SHOWN ON THESE SHEETS IS BASED ON LIMITED INVESTIGATIONS BY THE STATE AND IS IN NO WAY WARRANTED TO INDICATE THE CONDITIONS OF ACTUAL QUANTITIES OF WORK WHICH WILL BE REQUIRED.

Plotted Date: 10/22/2019

DESIGNER/DRAFTER: M. HABEK
CHECKED BY: R. MEARS
SCALE: 1" = 50'

STATE OF CONNECTICUT
DEPARTMENT OF TRANSPORTATION

Filename: ...\SB_MSH_GPN_0139_0113.dgn

SIGNATURE/BLOCK:
STATE OF CONNECTICUT JAMES V. DRESCHER JR. LICENSED PROFESSIONAL ENGINEER No. 23641
Alfred Benesch & Company
120 Hebron Avenue
2nd Floor
Glastonbury, CT

PROJECT TITLE:
REHABILITATION OF BRIDGE NO. 03295 - ROUTE 190 OVER CONNECTICUT RIVER & AMTRAK

TOWN: SUFFIELD/ENFIELD

DRAWING TITLE: PLAN AND ELEVATION

PROJECT NO. 139-113
DRAWING NO. S-02
SHEET NO. 4.02

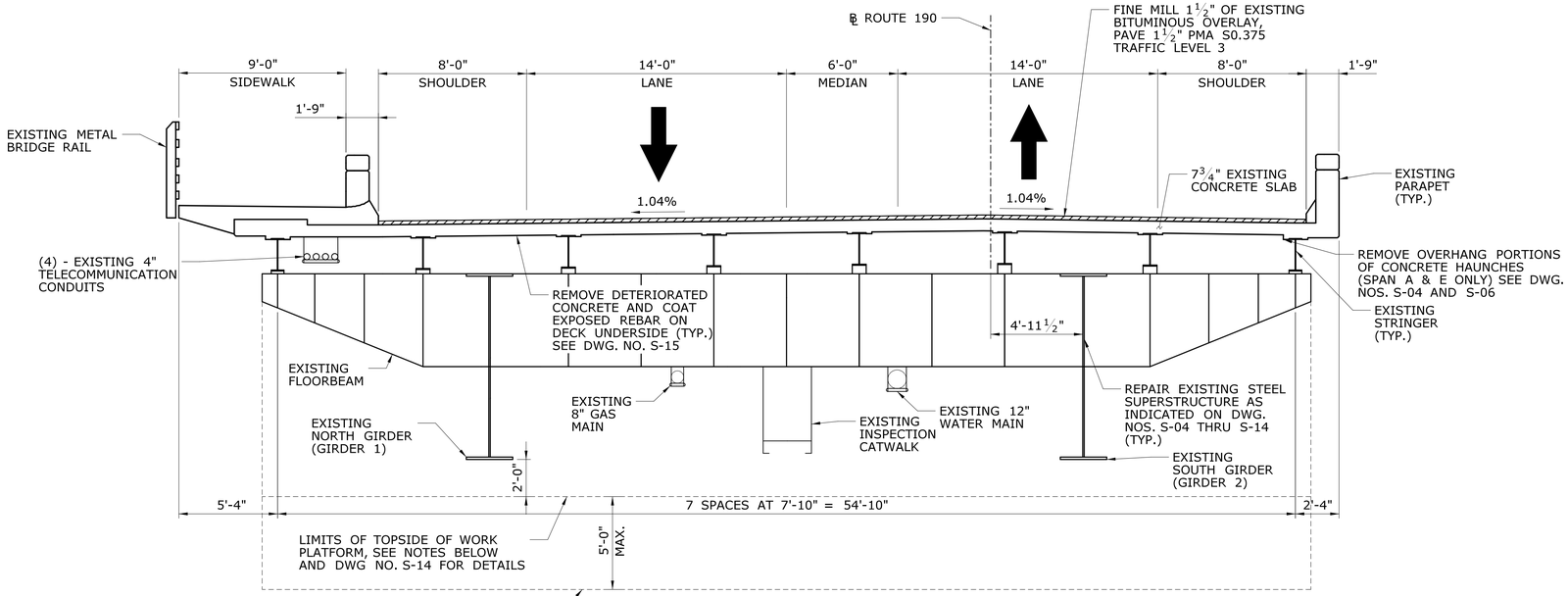

TYPICAL BRIDGE SECTION

SPAN B SHOWN, SPANS A & C-H SIMILAR

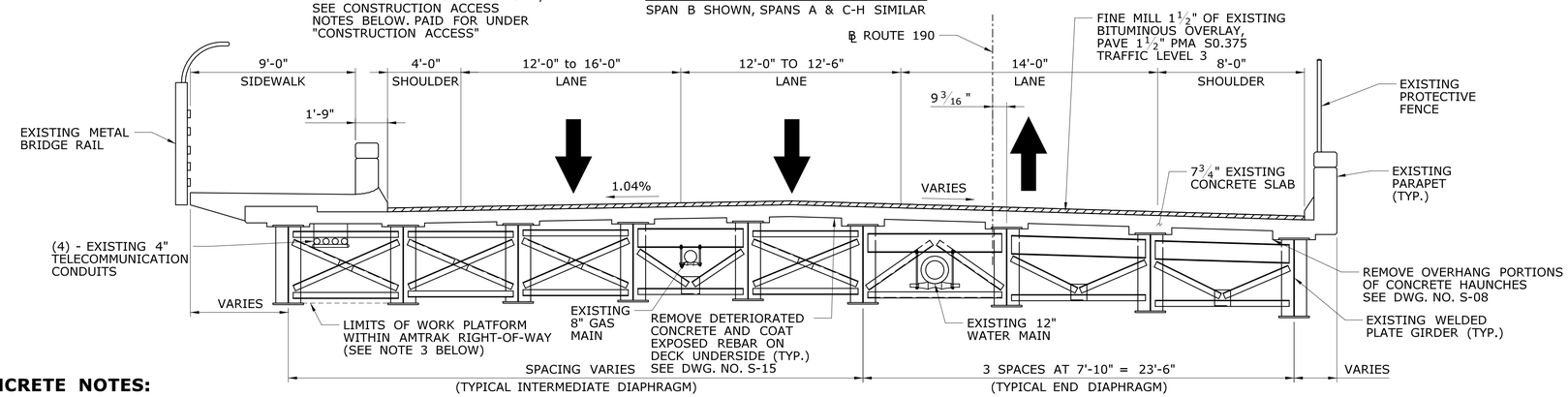

TYPICAL BRIDGE SECTION

SPAN J

CONCRETE NOTES:

THE FOLLOWING PAY ITEMS AND CONCRETE CLASSES ARE REQUIRED FOR CAST-IN-PLACE BRIDGE COMPONENTS:

ITEM	BRIDGE COMPONENTS	PCC CLASS
PARAPET CONCRETE	BRIDGE PARAPET	PCC04462

PARAPET CONCRETE: PARAPET CONCRETE SHALL BE USED FOR PARAPET RECONSTRUCTION AT PIER 6, IF NECESSARY.

DECK REPAIRS: SURFACE REPAIRS TO THE DECK UNDERSIDE SHALL BE PERFORMED IN ACCORDANCE WITH THE SPECIAL PROVISION "CLEAN AND COAT EXPOSED REINFORCING STEEL". FULL DEPTH PATCHING AT DECK ENDS/JOINTS (AS REQUIRED) AS DIRECTED BY THE ENGINEER SHALL BE PERFORMED IN ACCORDANCE WITH THE SPECIAL PROVISION "FULL DEPTH PATCH (HIGH EARLY STRENGTH CONCRETE)". PARTIAL DEPTH PATCHING AT DECK ENDS/JOINTS (AS REQUIRED) AS DIRECTED BY THE ENGINEER SHALL BE PERFORMED IN ACCORDANCE WITH THE SPECIAL PROVISION "PARTIAL DEPTH PATCH".

JOINT SEAL: SEE SPECIAL PROVISIONS.

EXPOSED EDGES: EXPOSED EDGES OF CONCRETE SHALL BE BEVELED 1" X 1" UNLESS DIMENSIONED OTHERWISE.

CONCRETE COVER: ALL REINFORCEMENT SHALL HAVE TWO INCHES COVER UNLESS DIMENSIONED OTHERWISE.

REINFORCEMENT: ALL REINFORCEMENT SHALL BE ASTM A615 GRADE 60.

CONSTRUCTION JOINTS: CONSTRUCTION JOINTS, OTHER THAN THOSE SHOWN ON THE PLANS, WILL NOT BE PERMITTED WITHOUT THE PRIOR APPROVAL OF THE ENGINEER.

CONSTRUCTION ACCESS NOTES:

1. SEE DWG NO. S-02 FOR ADDITIONAL DETAILS
2. ACCESS SHALL BE FROM THE ROADWAY LEVEL, USE OF BARGES IS PROHIBITED
3. FURNISHING AND INSTALLATION OF MATERIALS FOR THE WORK PLATFORMS SHALL BE PAID FOR UNDER THE ITEM "CONSTRUCTION ACCESS."

GENERAL NOTES:

SPECIFICATIONS: CONNECTICUT DEPARTMENT OF TRANSPORTATION FORM 817 (2016), SUPPLEMENTAL SPECIFICATIONS DATED JANUARY 2019 AND SPECIAL PROVISIONS.

DESIGN SPECIFICATIONS: ALL NEW ELEMENTS TO BE DESIGNED ACCORDING TO AASHTO LRFD BRIDGE DESIGN SPECIFICATIONS, 2017 8TH EDITION AND AS SUPPLEMENTED BY THE CONNECTICUT DEPARTMENT OF TRANSPORTATION BRIDGE DESIGN MANUAL (2003).

MATERIAL STRENGTHS:
CONCRETE:
CLASS PCC 04462 f'c = 4,000 PSI

THE CONCRETE STRENGTH, f'c, USED IN DESIGN OF THE CONCRETE COMPONENTS IS NOTED ABOVE. THE COMPRESSIVE STRENGTH OF THE CONCRETE IN THE CONSTRUCTED COMPONENTS SHALL CONFORM TO THE REQUIREMENTS OF 6.01 - CONCRETE FOR STRUCTURES, AND M.03 - PORTLAND CEMENT CONCRETE.

REINFORCEMENT:
(ASTM A615 GRADE 60) Fy = 60,000 (NEW ELEMENTS ONLY)

STRUCTURAL STEEL:
SEE DWG. NO. S-10 FOR DESIGNATIONS AND REQUIREMENTS.

LIVE LOAD:
LEGAL LOADS (TYPE 3, TYPE 3S2, TYPE 3-3, SU4, SU5, SU6, SU7, CT-L73.0, CT-L3S2, CT-HS20, CT-H20)
EXISTING MEMBERS - H-20 S-16-44 (AS PER 1964 PLANS).

FUTURE PAVING ALLOWANCE: NONE

PAINT: REMOVAL OF PAINT AND SURFACE PREPRATION OF STEEL AT THE BEAM ENDS, PRIOR TO STEEL REPAIRS, SHALL BE PERFORMED IN ACCORDANCE WITH THE REQUIREMENTS OF "ABRASIVE BLAST CLEANING AND FIELD PAINTING OF BEAM ENDS SITE NO. 1". BEAM ENDS ARE DEFINED AS THE END 1.5 X DEPTH OF THE EXISTING STRINGERS IN (SPANS A-H) AND GIRDERS IN (SPAN J) FROM A SUBSTRUCTURE UNIT. THE ENTIRETY OF THE FLOOR BEAMS OVER A SUBSTRUCTURE UNIT, AND A 3' LONG SECTION OF THE MAIN GIRDERS OVER THE HEIGHT OF THE FLOORBEAM (SPANS A-H) FROM A SUBSTRUCTURE UNIT, FOR DETAILS SEE DWG NO. S-10. STRUCTURAL STEEL SHALL BE PAINTED BELOW DECK JOINTS AT LOCATIONS INDICATED ON DWG NOS. S-04 TO S-10. REMOVAL OF PAINT AND SURFACE PREPARATION OF STEEL AWAY FROM THE BEAM ENDS, PRIOR TO STEEL REPAIRS (IF APPLICABLE), SHALL BE PERFORMED IN ACCORDANCE WITH "LOCALIZED PAINT REMOVAL AND FIELD PAINTING OF EXISTING STEEL" FOR LOCATIONS SEE DWG NOS. S-04 TO S-13. THE COLOR OF THE TOP COAT SHALL CONFORM TO THE FEDERAL STANDARD 595 COLOR NO. 26329 (BLUE) OR AS APPROVED BY ENGINEER.

BITUMINOUS CONCRETE OVERLAY: EXISTING BITUMINOUS CONCRETE ON THE BRIDGE DECK IS 2.5" THICK. FINE MILL 1.5" OF THE EXISTING BITUMINOUS OVERLAY. PAVE ONE LIFT OF 1.5" PMA S0.375 TRAFFIC LEVEL 3. EXISTING 1.0" THICK BITUMINOUS AND EXISTING WATERPROOFING MEMBRANE SHALL NOT BE DISTURBED.

DIMENSIONS: WHEN ELEVATIONS ARE GIVEN TO LESS THAN THREE DECIMAL PLACES,THE OMITTED DIGITS SHALL BE ASSUMED TO BE ZEROS.

EXISTING DIMENSIONS: DIMENSIONS OF THE EXISTING STRUCTURE SHOWN ON THESE PLANS ARE FOR GENERAL REFERENCE ONLY. THEY ARE BASED ON ROUGH FIELD MEASUREMENTS OR EXISTING DRAWINGS AND ARE NOT GUARANTEED. THE CONTRACTOR SHALL TAKE ALL FIELD MEASUREMENTS NECESSARY TO ASSURE PROPER FIT OF THE FINISHED WORK AND SHALL ASSUME FULL RESPONSIBILITY FOR THEIR ACCURACY. WHEN SHOP DRAWINGS BASED ON FIELD MEASUREMENTS ARE SUBMITTED FOR APPROVAL, THE FIELD MEASUREMENTS SHALL ALSO BE SUBMITTED FOR REFERENCE BY THE REVIEWER.

UTILITIES: ALL EXISTING UTILITIES SHALL BE MAINTAINED IN SERVICE DURING CONSTRUCTION.

EXISTING BRIDGE PLANS: PLANS FOR THE EXISTING BRIDGE (STATE PROJECT NOS. 139-64 AND 139-109) ARE AVAILABLE FOR CONTRACTOR REVIEW AT THE CTDOT RECORD CENTER LOCATED AT 160 PASCONE PLACE NEWINGTON, CT 06111.

ALL UNDERGROUND UTILITIES, CABLE, AND FACILITIES MUST BE LOCATED AND PROTECTED BEFORE ANY EXCAVATING, DRILLING, BORING/DIRECTIONAL DRILLING, GROUND PENETRATING ACTIVITIES, OR CONSTRUCTION TAKES PLACE. THIS INCLUDES RAILROAD AND COMMERCIAL UTILITIES, CABLES, DUCT LINES, AND FACILITIES. THESE ACTIVITIES WILL NOT BE PERFORMED IN CLOSE PROXIMITY TO THE AMTRAK DUCT LINES UNLESS MONITORED BY ON-SITE AMTRAK COMMUNICATIONS AND SIGNAL (C&S) DEPARTMENT PERSONNEL. HAND DIGGING MAY BE REQUIRED, AS DIRECTED BY AMTRAK THROUGH THE ON-SITE AMTRAK C&S PERSONNEL. AMTRAK MAINTAINS THE RIGHT TO ACCESS ALL EXISTING CABLES AND CONDUITS THROUGHOUT CONSTRUCTION. AMTRAK ALSO RESERVES THE RIGHT TO UPGRADE AND INSTALL NEW CABLES AND CONDUITS IN THE AFFECTED AREA. THE "ONE-CALL" PROCESS MUST BE FOLLOWED. BE AWARE THAT AMTRAK IS NOT A PART OF THE "ONE-CALL" PROCESS; CONTACT AMTRAK ENGINEERING TO HAVE ALL AMTRAK UNDERGROUND UTILITIES AND ASSETS LOCATED. PRECAUTIONS MUST BE TAKEN TO PREVENT ANY INTERRUPTION TO AMTRAK'S OPERATION.

ALL CONTRACTORS MUST EXECUTE THE THEN CURRENT VERSION OF AMTRAK'S "TEMPORARY PERMIT TO ENTER UPON PROPERTY" WHICH REQUIRES ALL PERSONS THAT ARE ON OR ADJACENT TO AMTRAK PROPERTY SUCCESSFULLY COMPLETE THE CONTRACT ORIENTATION TRAINING. ALL CONTRACTORS MUST CARRY THEIR "AMTRAK CONTRACTOR ROADWAY WORKER PROTECTION" CARD WITH THEM AT ALL TIMES WHILE ON OR ADJACENT TO AMTRAK PROPERTY.

ANY DEBRIS FALLING ONTO AMTRAK PROPERTY OR DAMAGE TO AMTRAK INFRASTRUCTURE RESULTING FROM THE WORK SHALL BE IMMEDIATELY REPORTED TO AMTRAK. DAMAGE TO AMTRAK INFRASTRUCTURE WILL BE REPAIRED BY RAILROAD FORCES AT PROJECT EXPENSE.

THE WORK ON AND ADJACENT TO AMTRAK PROPERTY SHALL CONFORM TO THE AMTRAK ENGINEERING PRACTICES EP3014.

TIME OF YEAR RESTRICTION: IN ORDER TO PROTECT THE PEREGRINE FALCON, THE PROPOSED CONSTRUCTION ACTIVITIES WITHIN 500 FEET FROM A KNOWN NEST SHALL BE COMPLETED DURING NON NESTING SEASON MONTHS (AUGUST-MARCH). SEE SPECIAL PROVISION "SECTION 1.10 - ENVIRONMENTAL COMPLIANCE" FOR ADDITIONAL DETAILS AND COORDINATION REQUIREMENTS. THE CONTRACTOR MAY ELECT TO INSTALL A BIRD NET PRIOR TO NESTING SEASON TO PROTECT THE BRIDGE FROM NESTING FALCONS. PAID FOR UNDER "FURNISH AND INSTALL BIRD CONTROL SYSTEM". SEE DWG NO. S-14 FOR STEEL REPAIR CONSTRUCTION SEQUENCE.

CONCRETE DISTRIBUTION		
PARAPET (SUPERSTRUCTURE)	L.F.	5

REV.	DATE	REVISION DESCRIPTION	SHEET NO.

THE INFORMATION, INCLUDING ESTIMATED QUANTITIES OF WORK, SHOWN ON THESE SHEETS IS BASED ON LIMITED INVESTIGATIONS BY THE STATE AND IS IN NO WAY WARRANTED TO INDICATE THE CONDITIONS OF ACTUAL QUANTITIES OF WORK WHICH WILL BE REQUIRED.

Plotted Date: 10/22/2019

DESIGNER/DRAFTER: M. HABEK
CHECKED BY: R. MEARS
SCALE: ¼" = 1'-0"

STATE OF CONNECTICUT
DEPARTMENT OF TRANSPORTATION

Filename: ...\SB_MSH_Br03295_139_113_SECT.dgn

SIGNATURE/BLOCK:
Alfred Benesch & Company
120 Hebron Avenue
2nd Floor
Glastonbury, CT

PROJECT TITLE:
REHABILITATION OF BRIDGE NO. 03295 - ROUTE 190 OVER CONNECTICUT RIVER & AMTRAK

TOWN: SUFFIELD/ENFIELD

DRAWING TITLE: SECTION AND NOTES

PROJECT NO. 139-113
DRAWING NO. S-03
SHEET NO. 4.03

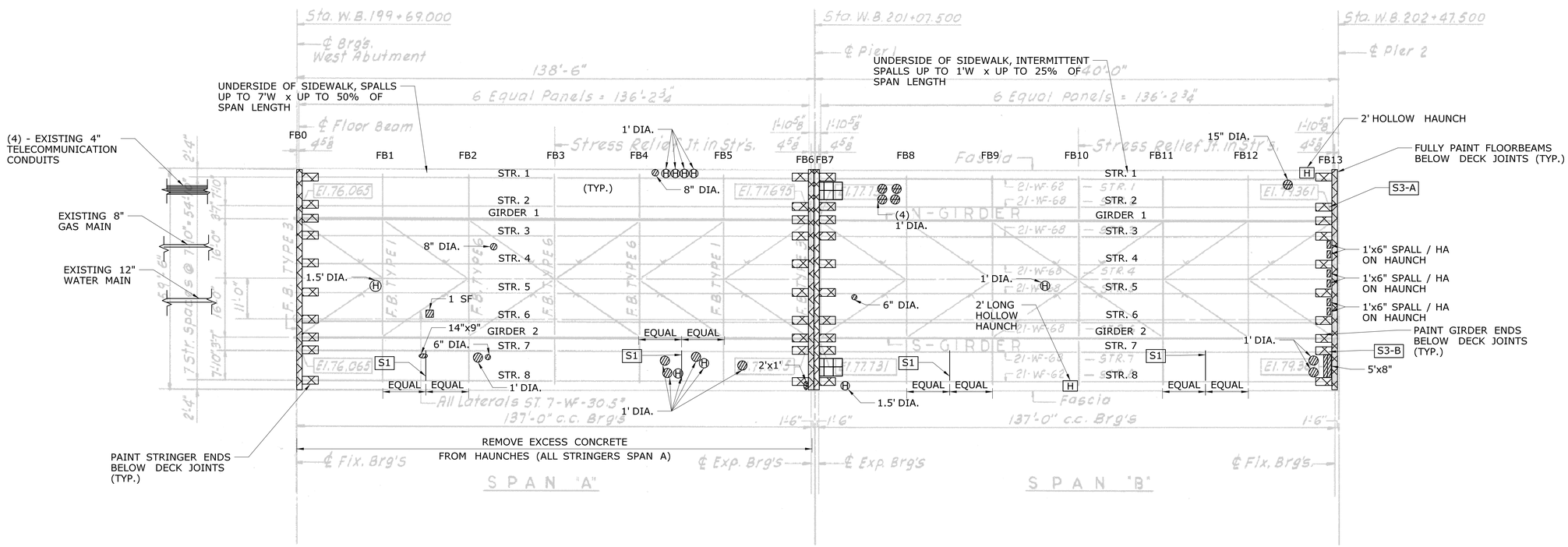

REPAIR LEGEND

ABRASIVE BLAST CLEANING AND FIELD PAINTING OF BEAM ENDS - SEE DWG. S-10 FOR PAINTING DETAILS

CLEAN EXISTING SCUPPER (TOP OF DECK)

UNDERSIDE OF DECK REPAIR SYMBOLS

H - DELAMINATION/HOLLOW CONCRETE

- CONCRETE SPALL

- CONCRETE SPALL WITH EXPOSED REINFORCEMENT

NOTES:
1. FOR STEEL REPAIR CRITERIA SEE DWG NO. S-09
2. FOR STEEL REPAIR SEQUENCE SEE DWG NO. S-14
3. FOR TYPICAL STEEL REPAIR DETAILS, SEE DRAWING NOS. S-10 THROUGH S-13.
4. FOR TYPICAL CONCRETE DECK REPAIR DETAILS, SEE DRAWING NO. S-15 AND S-16.

PLAN - SPANS A & B

CONDITION & STRENGTHENING REPAIR TYPE LEGEND

S1 STRINGER DIAPHRAGM DETAIL - SEE DWG. NO. S-11

S3(A-B) STRINGER WEB REPAIR DETAIL - SEE DWG. NO. S-11

STEEL REPAIR TABLE - TYPE S3 REPAIRS

DESIGNATION	COMPONENT	PLATE SIZE [IN] L x H x T	COMMENTS
S3-A	WEB	6.0 x 9.0 x 0.5	BOTH SIDES
S3-B	WEB	6.0 x 18.0 x 0.5	BOTH SIDES

REV.	DATE	REVISION DESCRIPTION	SHEET NO.

THE INFORMATION, INCLUDING ESTIMATED QUANTITIES OF WORK, SHOWN ON THESE SHEETS IS BASED ON LIMITED INVESTIGATIONS BY THE STATE AND IS IN NO WAY WARRANTED TO INDICATE THE CONDITIONS OF ACTUAL QUANTITIES OF WORK WHICH WILL BE REQUIRED.

Plotted Date: 10/22/2019

DESIGNER/DRAFTER: C. SORENSEN
CHECKED BY: R. MEARS
SCALE IN FEET 0 16 32
SCALE 1/16"=1'

STATE OF CONNECTICUT
DEPARTMENT OF TRANSPORTATION

Filename: ...\SB_MSH_Br03295_139_113_FRM-1.dgn

SIGNATURE/BLOCK:
STATE OF CONNECTICUT STEVEN J. DRESCHER LIC. NO. 23641 LICENSED PROFESSIONAL ENGINEER
Alfred Benesch & Company
120 Hebron Avenue
2nd Floor
Glastonbury, CT

PROJECT TITLE:
REHABILITATION OF BRIDGE NO. 03295 - ROUTE 190 OVER CONNECTICUT RIVER & AMTRAK

TOWN: SUFFIELD/ENFIELD

DRAWING TITLE: SPANS A & B

PROJECT NO. 139-113
DRAWING NO. S-04
SHEET NO. 4.04

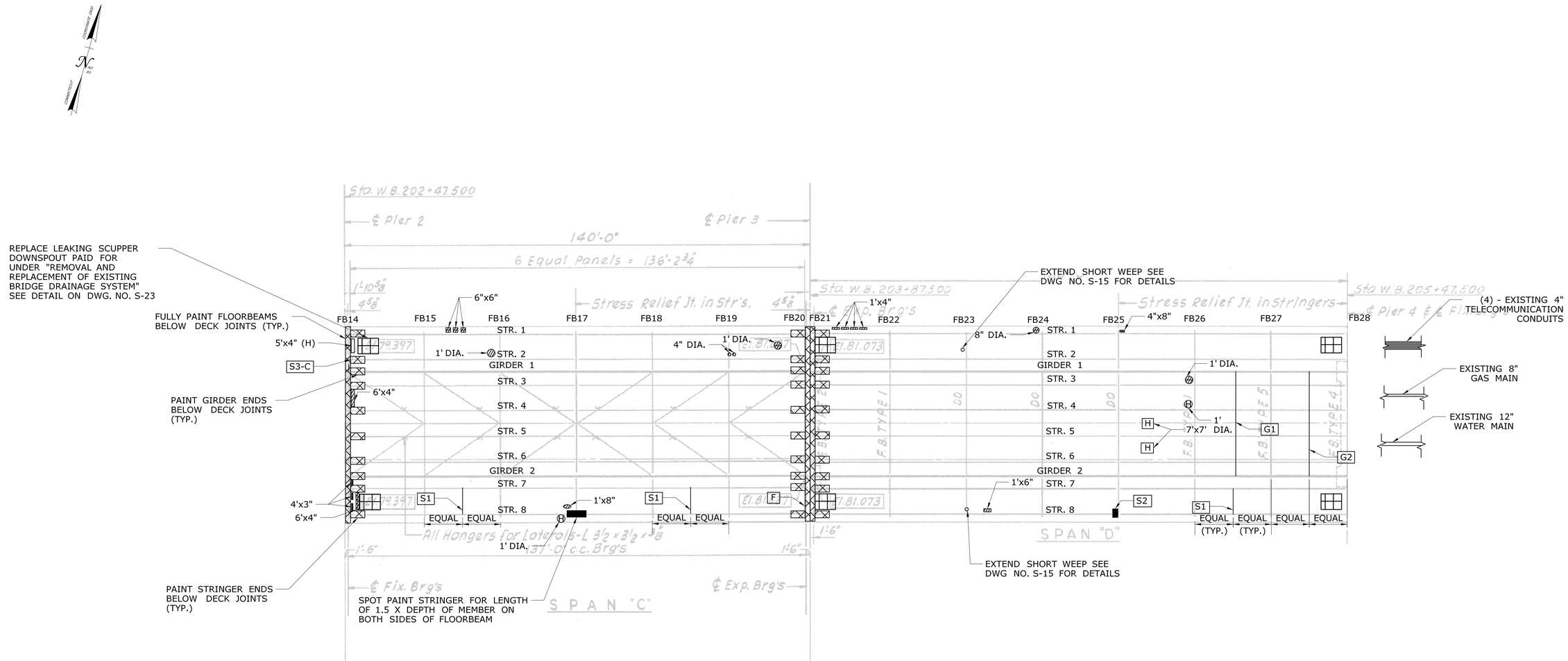

PLAN - SPANS C & D

REPAIR LEGEND

- ABRASIVE BLAST CLEANING AND FIELD PAINTING OF BEAM ENDS - SEE DWG. S-10 FOR PAINTING DETAILS
- LOCALIZED PAINT REMOVAL AND FIELD PAINTING OF EXISTING STEEL
- CLEAN EXISTING SCUPPER (TOP OF DECK)

UNDERSIDE OF DECK REPAIR SYMBOLS

- H - DELAMINATION/HOLLOW CONCRETE
- CONCRETE SPALL
- CONCRETE SPALL WITH EXPOSED REINFORCEMENT

NOTES:
1. FOR STEEL REPAIR CRITERIA SEE DWG NO. S-09
2. FOR STEEL REPAIR SEQUENCE SEE DWG NO. S-14
3. FOR TYPICAL STEEL REPAIR DETAILS, SEE DRAWING NOS. S-10 THROUGH S-13.
4. FOR TYPICAL CONCRETE DECK REPAIR DETAILS, SEE DRAWING NO. S-15 AND S-16.

STEEL REPAIR TABLE - TYPE S2 & S3 REPAIRS

DESIGNATION	COMPONENT	PLATE SIZE [IN] L x H x T	COMMENTS
S3-C	WEB	6.0 x 9.0 x 0.5	BOTH SIDES
S2	WEB	18.0 x 18.0 x 0.5	ONE SIDE

CONDITION & STRENGTHENING REPAIR TYPE LEGEND

S1	STRINGER DIAPHRAGM DETAIL - SEE DWG. NO. S-11
S2	STRINGER WEB REPAIR DETAIL - SEE DWG. NO. S-11
S3(C)	STRINGER WEB REPAIR DETAIL - SEE DWG. NO. S-11
G1	GIRDER (10' DEEP) BRACING DETAIL - SEE DWG. NO. S-12
G2	GIRDER (>10' DEEP) BRACING DETAIL - SEE DWG. NO. S-12
F	FLOOR BEAM WEB REPAIR DETAIL - SEE DWG. NO. 13

REV.	DATE	REVISION DESCRIPTION	SHEET NO.

THE INFORMATION, INCLUDING ESTIMATED QUANTITIES OF WORK, SHOWN ON THESE SHEETS IS BASED ON LIMITED INVESTIGATIONS BY THE STATE AND IS IN NO WAY WARRANTED TO INDICATE THE CONDITIONS OF ACTUAL QUANTITIES OF WORK WHICH WILL BE REQUIRED.

Plotted Date: 10/22/2019

DESIGNER/DRAFTER: C. SORENSEN
CHECKED BY: R. MEARS
SCALE IN FEET 0 16 32
SCALE 1/16"=1'

STATE OF CONNECTICUT
DEPARTMENT OF TRANSPORTATION

Filename: ..\SB_MSH_Br03295_139_113_FRM-2.dgn

SIGNATURE/BLOCK:
STATE OF CONNECTICUT STEVEN J. DRESCHER JR. LICENSED PROFESSIONAL ENGINEER No. 23641
Alfred Benesch & Company
120 Hebron Avenue
2nd Floor
Glastonbury, CT

PROJECT TITLE:
REHABILITATION OF BRIDGE NO. 03295 - ROUTE 190 OVER CONNECTICUT RIVER & AMTRAK

TOWN: SUFFIELD/ENFIELD

DRAWING TITLE: SPANS C & D

PROJECT NO. 139-113
DRAWING NO. S-05
SHEET NO. 4.05

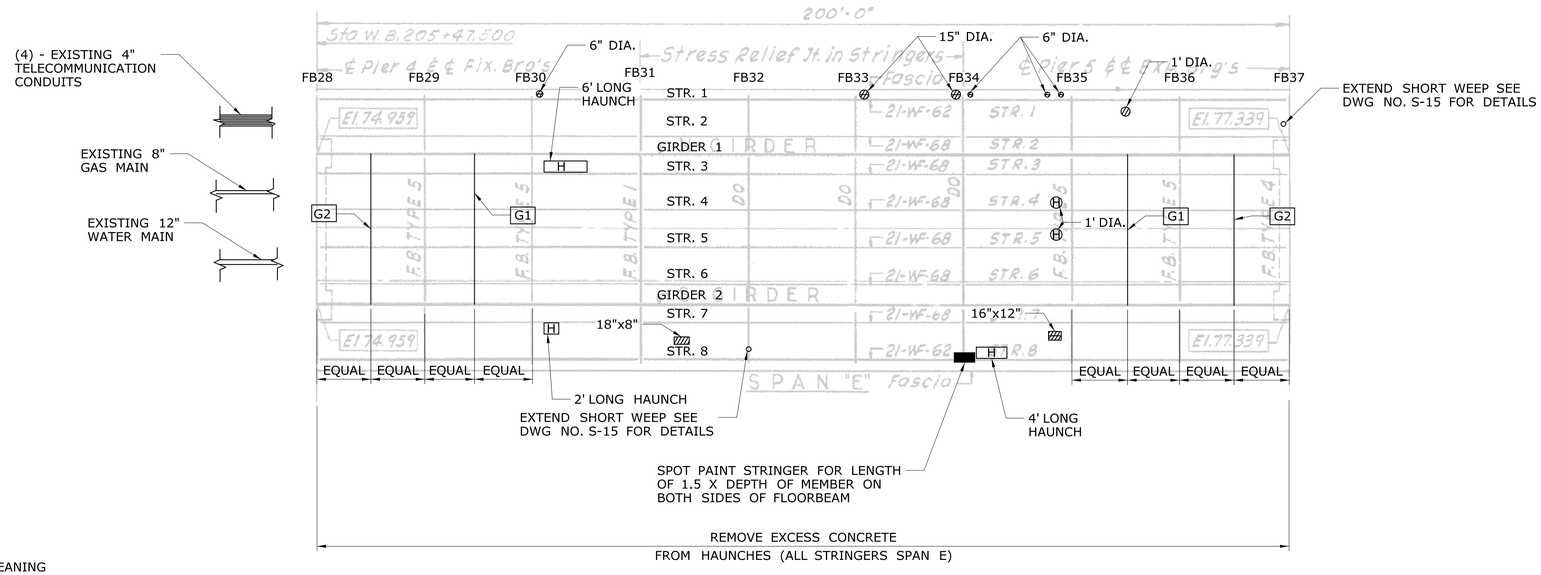

PLAN - SPAN E

REPAIR LEGEND

- ABRASIVE BLAST CLEANING AND FIELD PAINTING OF BEAM ENDS - SEE DWG. S-10 FOR PAINTING DETAILS
- LOCALIZED PAINT REMOVAL AND FIELD PAINTING OF EXISTING STEEL
- CLEAN EXISTING SCUPPER (TOP OF DECK)

UNDERSIDE OF DECK REPAIR SYMBOLS

- H - DELAMINATION/HOLLOW CONCRETE
- CONCRETE SPALL
- CONCRETE SPALL WITH EXPOSED REINFORCEMENT

STRENGTHENING REPAIR TYPE LEGEND

- G1 GIRDER (10' DEEP) BRACING DETAIL - SEE DWG. NO. S-12
- G2 GIRDER (>10' DEEP) BRACING DETAIL - SEE DWG. NO. S-12

NOTES:
1. FOR STEEL REPAIR CRITERIA SEE DWG NO. S-09
2. FOR STEEL REPAIR SEQUENCE SEE DWG NO. S-14
3. FOR TYPICAL STEEL REPAIR DETAILS, SEE DRAWING NOS. S-10 THROUGH S-13.
4. FOR TYPICAL CONCRETE DECK REPAIR DETAILS, SEE DRAWING NO. S-15 AND S-16.

REV.	DATE	REVISION DESCRIPTION	SHEET NO.

THE INFORMATION, INCLUDING ESTIMATED QUANTITIES OF WORK, SHOWN ON THESE SHEETS IS BASED ON LIMITED INVESTIGATIONS BY THE STATE AND IS IN NO WAY WARRANTED TO INDICATE THE CONDITIONS OF ACTUAL QUANTITIES OF WORK WHICH WILL BE REQUIRED.

Plotted Date: 10/22/2019

DESIGNER/DRAFTER: C. SORENSEN
CHECKED BY: R. MEARS
SCALE IN FEET 0 16 32
SCALE 1/16"=1'

STATE OF CONNECTICUT
DEPARTMENT OF TRANSPORTATION

Filename: ...\SB_MSH_Br03295_139_113_FRM-3.dgn

SIGNATURE/BLOCK:
STATE OF CONNECTICUT LICENSED PROFESSIONAL ENGINEER No. 23541
Alfred Benesch & Company
120 Hebron Avenue
2nd Floor
Glastonbury, CT

PROJECT TITLE:
REHABILITATION OF BRIDGE NO. 03295 - ROUTE 190 OVER CONNECTICUT RIVER & AMTRAK

TOWN: **SUFFIELD/ENFIELD**

DRAWING TITLE: **SPAN E**

PROJECT NO. **139-113**
DRAWING NO. **S-06**
SHEET NO. **4.06**

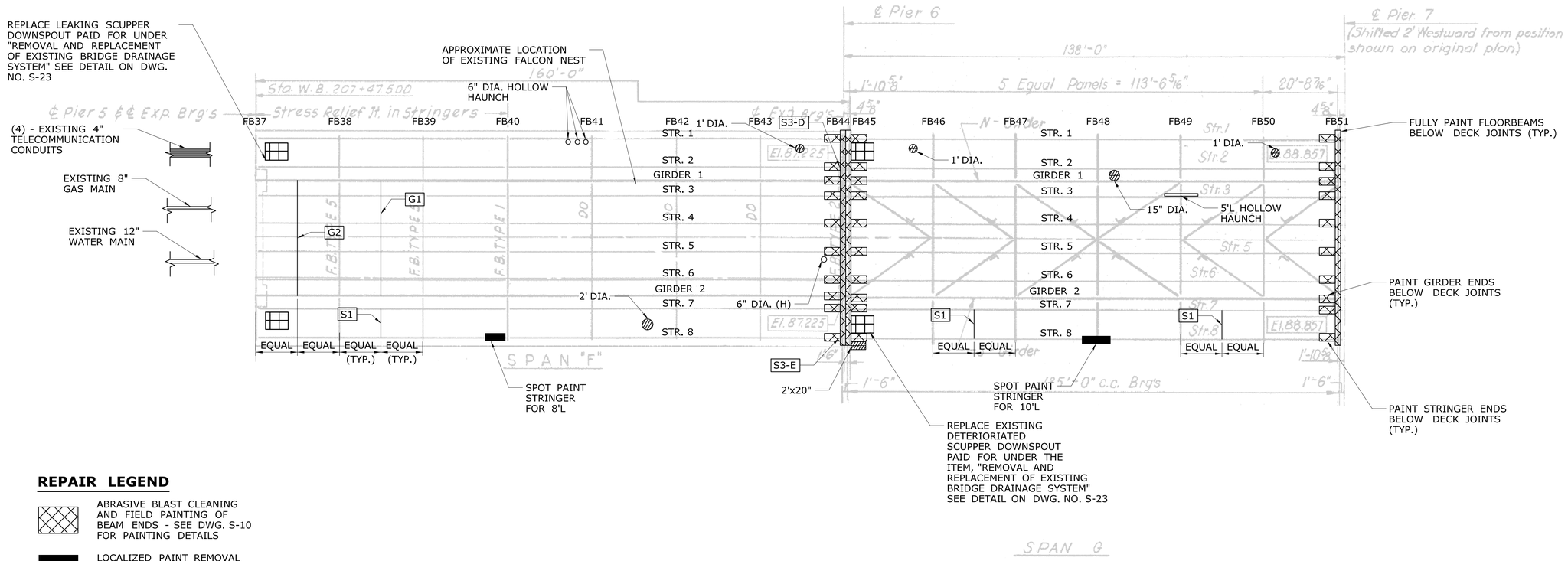

PLAN - SPANS F & G

REPAIR LEGEND

- ABRASIVE BLAST CLEANING AND FIELD PAINTING OF BEAM ENDS - SEE DWG. S-10 FOR PAINTING DETAILS
- LOCALIZED PAINT REMOVAL AND FIELD PAINTING OF EXISTING STEEL
- CLEAN EXISTING SCUPPER (TOP OF DECK)

UNDERSIDE OF DECK REPAIR SYMBOLS

- H - DELAMINATION/HOLLOW CONCRETE
- CONCRETE SPALL
- CONCRETE SPALL WITH EXPOSED REINFORCEMENT

NOTES:
1. FOR STEEL REPAIR CRITERIA SEE DWG NO. S-09
2. FOR STEEL REPAIR SEQUENCE SEE DWG NO. S-14
3. FOR TYPICAL STEEL REPAIR DETAILS, SEE DRAWING NOS. S-10 THROUGH S-13.
4. FOR TYPICAL CONCRETE DECK REPAIR DETAILS, SEE DRAWING NO. S-15 AND S-16.

STEEL REPAIR TABLE - TYPE S3 REPAIRS

DESIGNATION	COMPONENT	PLATE SIZE [IN] L x H x T	COMMENTS
S3-D	WEB	12.0 x 9.0 x 0.5	ONE SIDE
S3-E	WEB	12.0 x 9.0 x 0.5	ONE SIDE

CONDITION & STRENGTHENING REPAIR TYPE LEGEND

S1	STRINGER DIAPHRAGM DETAIL - SEE DWG. NO. S-11
S3(D-E)	STRINGER WEB REPAIR DETAIL - SEE DWG. NO. S-11
G1	GIRDER (10' DEEP) BRACING DETAIL - SEE DWG. NO. S-12
G2	GIRDER (>10' DEEP) BRACING DETAIL - SEE DWG. NO. S-12

REV.	DATE	REVISION DESCRIPTION	SHEET NO.

THE INFORMATION, INCLUDING ESTIMATED QUANTITIES OF WORK, SHOWN ON THESE SHEETS IS BASED ON LIMITED INVESTIGATIONS BY THE STATE AND IS IN NO WAY WARRANTED TO INDICATE THE CONDITIONS OF ACTUAL QUANTITIES OF WORK WHICH WILL BE REQUIRED.

Plotted Date: 10/22/2019

DESIGNER/DRAFTER: C. SORENSEN
CHECKED BY: R. MEARS
SCALE IN FEET 0 16 32
SCALE 1/16"=1'

STATE OF CONNECTICUT
DEPARTMENT OF TRANSPORTATION

Filename: ...\SB_MSH_Br03295_139_113_FRM-4.dgn

SIGNATURE/BLOCK:
STATE OF CONNECTICUT ALFRED J. BENESCH JR. No. 23641 LICENSED PROFESSIONAL ENGINEER
Alfred Benesch & Company
120 Hebron Avenue
2nd Floor
Glastonbury, CT

PROJECT TITLE:
REHABILITATION OF BRIDGE NO. 03295 - ROUTE 190 OVER CONNECTICUT RIVER & AMTRAK

TOWN: SUFFIELD/ENFIELD

DRAWING TITLE: SPANS F & G

PROJECT NO. 139-113
DRAWING NO. S-07
SHEET NO. 4.07

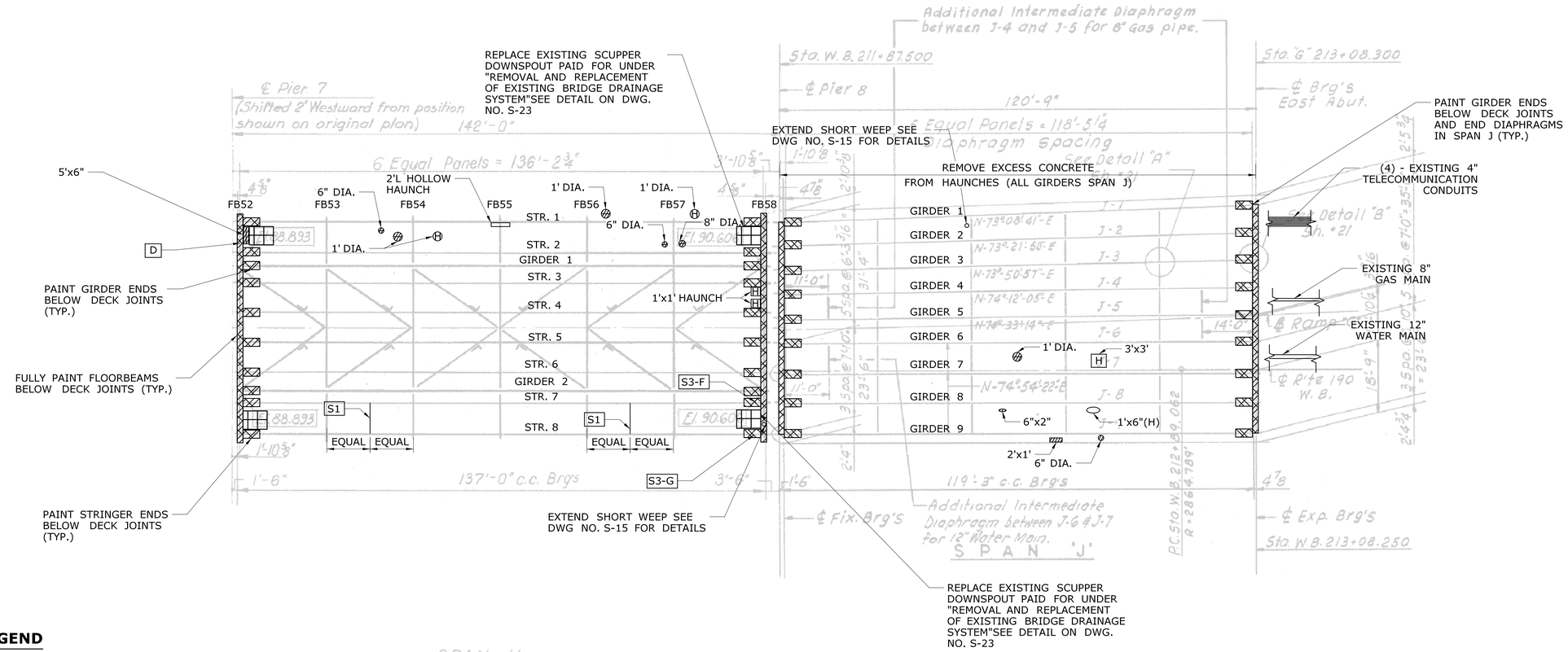

PLAN - SPANS H & J

REPAIR LEGEND

ABRASIVE BLAST CLEANING AND FIELD PAINTING OF BEAM ENDS - SEE DWG. S-10 FOR PAINTING DETAILS

CLEAN EXISTING SCUPPER (TOP OF DECK)

UNDERSIDE OF DECK REPAIR SYMBOLS

H - DELAMINATION/HOLLOW CONCRETE

- CONCRETE SPALL

- CONCRETE SPALL WITH EXPOSED REINFORCEMENT

NOTES:
1. FOR STEEL REPAIR CRITERIA SEE DWG NO. S-09
2. FOR STEEL REPAIR SEQUENCE SEE DWG NO. S-14
3. FOR TYPICAL STEEL REPAIR DETAILS, SEE DRAWING NOS. S-10 THROUGH S-13.
4. FOR TYPICAL CONCRETE DECK REPAIR DETAILS, SEE DRAWING NO. S-15 AND S-16.

STEEL REPAIR TABLE - TYPE S3 REPAIRS

DESIGNATION	COMPONENT	PLATE SIZE [IN] L x H x T	COMMENTS
S3-F	WEB	8.0 x 18.0 x 0.5	BOTH SIDES
S3-G	WEB	6.0 x 9.0 x 0.5	BOTH SIDES

CONDITION & STRENGTHENING REPAIR TYPE LEGEND

S1	STRINGER DIAPHRAGM DETAIL - SEE DWG. NO. S-11
S3(F-G)	STRINGER WEB REPAIR DETAIL - SEE DWG. NO. S-11
D	STRINGER DIAPHRAGM REPAIR DETAIL - SEE DWG. NO. S-13

REV.	DATE	REVISION DESCRIPTION	SHEET NO.

THE INFORMATION, INCLUDING ESTIMATED QUANTITIES OF WORK, SHOWN ON THESE SHEETS IS BASED ON LIMITED INVESTIGATIONS BY THE STATE AND IS IN NO WAY WARRANTED TO INDICATE THE CONDITIONS OF ACTUAL QUANTITIES OF WORK WHICH WILL BE REQUIRED.

Plotted Date: 10/22/2019

DESIGNER/DRAFTER: C. SORENSEN
CHECKED BY: R. MEARS
SCALE IN FEET 0 16 32
SCALE 1/16"=1'

STATE OF CONNECTICUT
DEPARTMENT OF TRANSPORTATION

Filename: ...\SB_MSH_Br03295_139_113_FRM-5.dgn

SIGNATURE/BLOCK:
Alfred Benesch & Company
120 Hebron Avenue
2nd Floor
Glastonbury, CT

PROJECT TITLE:
REHABILITATION OF BRIDGE NO. 03295 - ROUTE 190 OVER CONNECTICUT RIVER & AMTRAK

TOWN: SUFFIELD/ENFIELD

DRAWING TITLE: SPANS H & J

PROJECT NO. 139-113
DRAWING NO. S-08
SHEET NO. 4.08

STRENGTHENING REPAIRS BASED ON LOAD RATING:

THE FOLLOWING CRITERIA WAS USED TO DETERMINE THE LOCATIONS FOR PROPOSED STEEL REPAIRS.

A.STRINGERS - SPANS A THROUGH H
STRENGTHENING REPAIR TYPE S1 - STRINGER DIAPHRAGM DETAIL
-DIAPHRAGMS ARE ADDED TO STRINGERS THAT RATE BELOW 1.0 FOR LEGAL VEHICLES EXCLUDING TYPES EV2 AND EV3. BOTTOM FLANGES (COMPRESSION FLANGE) NEAR FLOOR BEAMS RATE BELOW 1.0 DUE TO UNBRACED LENGTH (DISTANCE BETWEEN FLOOR BEAMS) BEING TOO LONG. ADDED DIAPHRAGMS REDUCE THE UNBRACED LENGTH AND RESULT IN AN IMPROVED RATING FACTOR.

B.GIRDERS - SPANS A THROUGH H
STRENGTHENING REPAIR TYPES G1 & G2 - BRACING DETAIL FOR GIRDERS
-BRACES ARE ADDED TO GIRDERS THAT RATE BELOW 1.0 FOR LEGAL VEHICLES EXCLUDING TYPES EV2 AND EV3. COMPRESSION FLANGES RATE BELOW 1.0 DUE TO THE UNBRACED LENGTH (DISTANCE BETWEEN FLOOR BEAMS) BEING TOO LONG. ADDED BRACING REDUCES THE UNBRACED LENGTH AND RESULTS IN AN IMPROVED RATING FACTOR.

REPAIRS BASED ON CONDITION:

THE FOLLOWING CRITERIA WAS USED TO DETERMINE THE LOCATIONS FOR PROPOSED STEEL REPAIRS.

A.STRINGERS - SPANS A THROUGH H
REPAIR TYPES S2 & S3 - STRINGER WEB REPAIR DETAILS
-WEB REPAIR PLATES ARE ADDED AT LOCATIONS WHERE EITHER
1) THE WEB HAS PERFORATIONS (CRITICAL AND NON-CRITICAL AREAS).
2) THE TOTAL WEB LOSS AT THE LOCATION OF DETERIORATION IS 25% OR GREATER (SHEAR ZONE ONLY, WITHIN 5' OF FLOORBEAM).

STRINGER DIAPHRAGMS - SPANS A THROUGH H
REPAIR TYPE D - STRINGER DIAPHRAGM REPAIR DETAIL
-REPAIR PLATES ARE ADDED TO STRINGER END DIAPHRAGMS AT LOCATIONS WITH PERFORATIONS OR KNIFE EDGE.

FLOOR BEAMS - SPANS A THROUGH H
REPAIR TYPE F
-WEB REPAIR PLATES ARE ADDED AT LOCATIONS WHERE THE WEB HAS PERFORATIONS (CRITICAL AND NON-CRITICAL AREAS).

NOTE THAT SEVERAL FLOOR BEAMS LOCATED BELOW DECK JOINTS HAVE TOP FLANGE DETERIORATION WITH UP TO 58% SECTION LOSS IN CRITICAL AREAS (CANTILEVER PORTION OF FLOOR BEAM) AND BOTTOM FLANGE DETERIORATION UP TO 10.4% SECTION LOSS IN CRITICAL AREAS (MIDSPAN OF FLOOR BEAM). THESE AREAS ARE NOT BEING REPAIRED DUE TO THE LOAD RATING FACTORS BEING ABOVE 1.0 FOR LEGAL VEHICLES (EXCLUDING EV2 AND EV3). ONCE BLAST CLEANING HAS OCCURED AND PRIOR TO PAINTING, CONTRACTOR TO PROVIDE UPDATED SECTION LOSSES FOR FURTHER EVALUATION BY THE ENGINEER.

REV.	DATE	REVISION DESCRIPTION	SHEET NO.

THE INFORMATION, INCLUDING ESTIMATED QUANTITIES OF WORK, SHOWN ON THESE SHEETS IS BASED ON LIMITED INVESTIGATIONS BY THE STATE AND IS IN NO WAY WARRANTED TO INDICATE THE CONDITIONS OF ACTUAL QUANTITIES OF WORK WHICH WILL BE REQUIRED.

Plotted Date: 10/22/2019

DESIGNER/DRAFTER: C.SORENSEN
CHECKED BY: R.MEARS
SCALE AS NOTED

STATE OF CONNECTICUT
DEPARTMENT OF TRANSPORTATION

Filename: ...\SB_MSH_Br03295_139_113_STEEL REPAIR CRITERIA.dgn

SIGNATURE/BLOCK:
STATE OF CONNECTICUT STEPHEN J. DECELLE No. 23641 LICENSED PROFESSIONAL ENGINEER
Alfred Benesch & Company
120 Hebron Avenue
2nd Floor
Glastonbury, CT

PROJECT TITLE:
REHABILITATION OF BRIDGE NO. 03295 - ROUTE 190 OVER CONNECTICUT RIVER & AMTRAK

TOWN: SUFFIELD/ENFIELD

DRAWING TITLE: STEEL REPAIR CRITERIA

PROJECT NO. 139-113
DRAWING NO. S-09
SHEET NO. 4.09

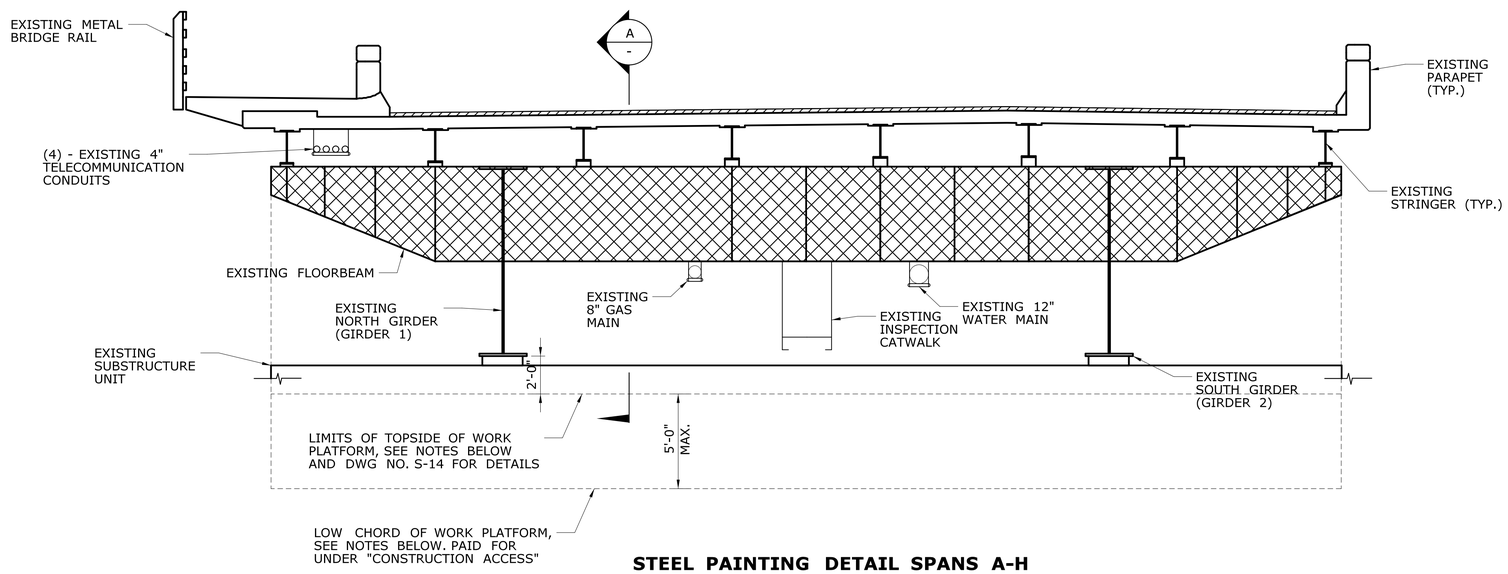

STEEL PAINTING DETAIL SPANS A-H

SCALE: 1/4" = 1'-0"

NOTE: FLOORBEAM, MAIN GIRDER, AND STRINGERS FULLY PAINTED BELOW DECK JOINTS ONLY. SEE DWG NO. S-04 THROUGH S-08 FOR LOCATIONS. SPAN B SHOWN, SPANS A & C-H SIMILAR

STEEL REPAIR NOTES:

1. SEE FRAMING PLANS DWG NO. S-04 TO S-08 FOR LOCATIONS OF REQUIRED REPAIRS.

2. LIMITS OF STEEL DETERIORATION SHALL BE FIELD VERIFIED AFTER PAINT REMOVAL AND PRIOR TO FABRICATING REPAIR PLATES.

3. STRUCTURAL STEEL SHALL CONFORM TO AASHTO M270, GRADE 50 T2. BOLTS SHALL CONFORM TO AASHTO ASTM F3125 GRADE A325.

4. WELDING DETAILS, PROCEDURES AND TESTING METHODS SHALL CONFORM TO THE ANSI/AASHTO/AWS D1.5M (2015) - BRIDGE WELDING CODE, WITH CURRENT INTERIMS, UNLESS OTHERWISE NOTED ON THE PLANS.

5. REMOVAL OF PAINT AND SURFACE PREPRATION OF STEEL AT THE BEAM ENDS, PRIOR TO STEEL REPAIRS, SHALL BE PERFORMED IN ACCORDANCE WITH THE REQUIREMENTS OF "ABRASIVE BLAST CLEANING AND FIELD PAINTING OF BEAM ENDS (SITE NO. 1)". BEAM ENDS ARE DEFINED AS THE END 1.5 X DEPTH OF THE EXISTING STRINGERS IN (SPANS A-H) AND GIRDERS IN (SPAN J) FROM A SUBSTRUCTURE UNIT, THE ENTIRETY OF THE FLOOR BEAMS OVER A SUBSTRUCTURE UNIT, AND 3' LONG SECTION OF THE MAIN GIRDERS OVER THE HEIGHT OF THE FLOORBEAM (SPANS A-H) FROM A SUBSTRUCTURE UNIT. STRUCTURAL STEEL SHALL BE PAINTED BELOW DECK JOINTS AS INDICATED ON DWG NOS. S-04 TO S-08 AND THIS SHEET.

6. REMOVAL OF PAINT AND SURFACE PREPARATION OF STEEL AWAY FROM THE BEAM ENDS (IF APPLICABLE), PRIOR TO STEEL REPAIRS, SHALL BE PERFORMED IN ACCORDANCE WITH "LOCALIZED PAINT REMOVAL AND FIELD PAINTING OF EXISTING STEEL", FOR LOCATIONS SEE DWG NOS. S-04 TO S-08. FOR LIMITS SEE STEEL REPAIR DETAILS ON DWG. NOS. S-11 TO S-12.

7. ALL STEEL REPAIR PLATES AND ANGLES SHALL BE PRIME COATED BEFORE DELIVERY TO THE SITE IN ACCORDANCE WITH "STRUCTURAL STEEL REPAIRS (SITE NO. 1)". THIS SHALL EXCLUDE NEW STEEL FOR REPAIR TYPE G1 AND G2 BRACE DETAIL WHICH SHALL BE FULLY PAINTED BEFORE DELIVERY TO THE SITE IN ACCORDANCE WITH "STRUCTURAL STEEL (SITE NO. 1)". FAYING SURFACES FOR TYPE G1 AND G2 BRACE DETAIL SHALL ONLY RECIEVE A PRIME COAT BEFORE DELIVERY PER "STRUCTURAL STEEL (SITE NO. 1)".

8. ALL FIELD WELDS SHALL BE TESTED BY MAGNETIC PARTICLE METHOD. WHERE MULTIPLE LAYERS OF WELDS ARE NEEDED, EACH LAYER MUST BE INSPECTED BEFORE ADDITIONAL LAYER IS WELDED.

9. ALL STRUCTURAL STEEL PLATES AND ANGLES, INCLUDING FIELD WELDS AND BOLTS SHALL BE PAID FOR UNDER THE ITEM "STRUCTURAL STEEL REPAIRS (SITE NO. 1)". THIS SHALL EXCLUDE STEEL PLATES, ANGLES, FIELD WELDING AND BOLTING FOR REPAIR TYPE G1 AND G2 WHICH SHALL BE PAID FOR UNDER "STRUCTURAL STEEL (SITE NO. 1)"

10. THE STRUCTURAL STEEL IN THE AREAS OF STRENGTHENING REPAIRS SHOWN SHOULD NOT REQUIRE ANY CONDITION REPAIRS. THE CONTRACTOR SHALL NOTIFY THE ENGINEER IF ANY STRENGTHENING REPAIR LOCATIONS ARE ENCOUNTERED THAT REQUIRE CONDITION REPAIRS.

11. FOR SURFACE TREATMENT REQUIRED AT THE FAYING SURFACES REFER TO THE SPECIAL PROVISIONS FOR "STRUCTURAL STEEL (SITE NO. 1)" AND "STRUCTURAL STEEL REPAIRS (SITE NO. 1)"

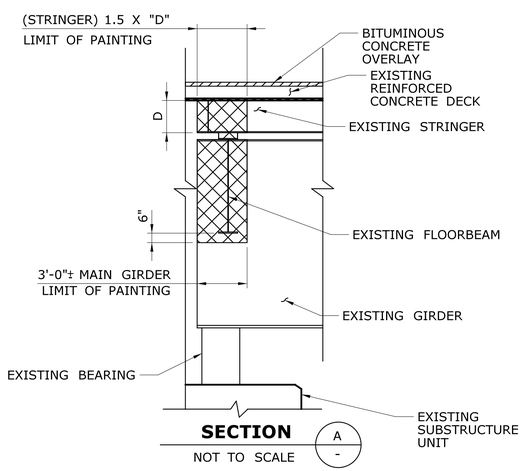

SECTION

NOT TO SCALE

NOTE: THICKENED SLAB AT DECK ENDS AND END DIAPHRAGMS NOT SHOWN FOR CLARITY

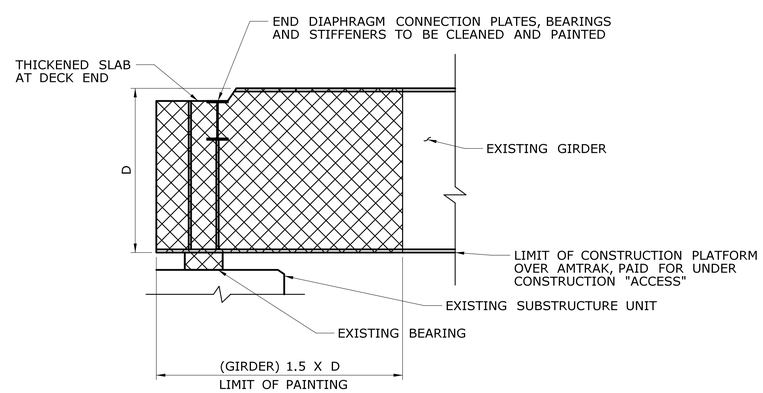

STEEL PAINTING DETAIL SPAN J

NOT TO SCALE

LIMITS OF PAINTING

PAINTING AND PLATFORM NOTES:

1. THE TOPSIDE OF THE WORK PLATFORMS AND PAINT CONTAINMENT SYSTEMS IN SPANS A-H SHALL BE INSTALLED AT 2' MINIMUM BELOW THE BOTTOM FLANGE OF THE MAIN GIRDERS TO ACCOMODATE MOVEMENT OF MATERIALS BELOW THE LOW CHORD.

2. THE LOW CHORD OF THE WORK PLATFORMS IN SPANS A-H SHALL BE LOCATED ABOVE THE 100 YEAR FEMA FLOOD ELEVATION (EL 51.6) AND SHALL BE LESS THAN 7' BELOW THE BOTTOM FLANGE OF THE MAIN GIRDERS.

3. THE WORK PLATFORM IN SPAN J SHALL NOT IMPACT THE HORIZONTAL AND VERTICAL AMTRAK RAILROAD CAR ENVELOPE. SHOULD A WORK PLATFORM BE REQUIRED WITHIN THE HORIZONTAL AND VERTICAL AMTRAK CAR ENVELOPE OR WITHIN AMTRAK RIGHT-OF -WAY, THE WORK PLATFORM SHALL NOT BE PLACED BELOW THE LOW CHORD OF THE BOTTOM FLANGE OF THE GIRDER.

4. ANY STAGING OR STORAGE LOCATIONS FOR EQUIPMENT, MATERIAL, AND DEBRIS FOR CONTRACTOR OPERATIONS, INCLUDING PAINT REMOVAL SHALL BE LOCATED ABOVE THE 100 YEAR FEMA FLOOD ELEVATION (EL. 51.6).

5. PAINT SHALL BE APPLIED TO ALL EXPOSED SURFACES OF STEEL (INCLUDING BEARINGS) WITHIN THE PAINTING LIMITS.

REPAIR LEGEND

LIMITS ABRASIVE BLAST CLEANING AND FIELD PAINTING OF BEAM ENDS

APPROXIMATE STEEL PAINTING AREA

ITEM DESCRIPTION	AREA (SF)
ABRASIVE BLAST CLEANING AND FIELD PAINTING OF BEAM ENDS (SITE NO. 1)	22,500
LOCALIZED PAINT REMOVAL AND FIELD PAINTING OF EXISTING STEEL	690

REV.	DATE	REVISION DESCRIPTION	SHEET NO.

THE INFORMATION, INCLUDING ESTIMATED QUANTITIES OF WORK, SHOWN ON THESE SHEETS IS BASED ON LIMITED INVESTIGATIONS BY THE STATE AND IS IN NO WAY WARRANTED TO INDICATE THE CONDITIONS OF ACTUAL QUANTITIES OF WORK WHICH WILL BE REQUIRED.

Plotted Date: 10/29/2019

DESIGNER/DRAFTER: R.MEARS
CHECKED BY: S.DRECHSLER
SCALE AS NOTED

STATE OF CONNECTICUT
DEPARTMENT OF TRANSPORTATION

Filename: ...\SB_MSH_Br03295_139_113_STEEL REPAIR DETAILS 1.dgn

SIGNATURE/BLOCK:
STATE OF CONNECTICUT STEPHEN J. DRECHSLER No. 23541 LICENSED PROFESSIONAL ENGINEER
Alfred Benesch & Company
120 Hebron Avenue
2nd Floor
Glastonbury, CT

PROJECT TITLE:
REHABILITATION OF BRIDGE NO. 03295 - ROUTE 190 OVER CONNECTICUT RIVER & AMTRAK

TOWN: **SUFFIELD/ENFIELD**

DRAWING TITLE: **STEEL REPAIR DETAILS - 1**

PROJECT NO. **139-113**
DRAWING NO. **S-10**
SHEET NO. **4.10**

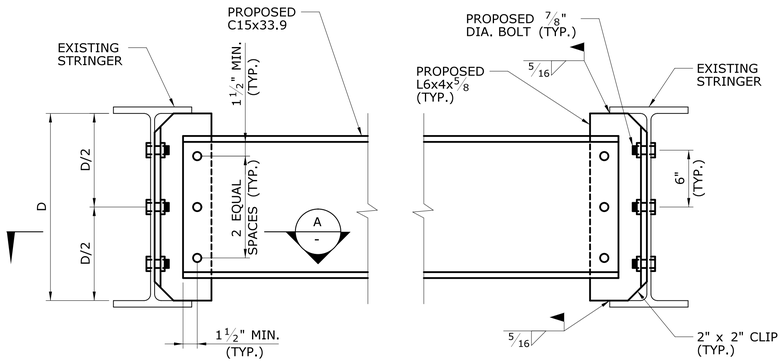

STRENGTHENING REPAIR TYPE S1 - STRINGER DIAPHRAGM DETAIL

SCALE: N.T.S.

NOTE:
1. SURFACE PREPARATION OF EXISTING STEEL AND PAINTING OF NEW STEEL PAID FOR UNDER "LOCALIZED PAINT REMOVAL AND FIELD PAINTING OF EXISTING STEEL'.
2. STEEL REPAIRS FOR TYPE S1 SHALL BE PRIME COATED ONLY PRIOR TO DELIVERY TO THE SITE AND SHALL BE PAID FOR UNDER "STRUCTURAL STEEL REPAIRS (SITE NO. 1)"
3. BOLT HOLES IN CHANNELS SHALL BE 15/16" DIA. (STANDARD) FOR ⅞" DIA. BOLTS. BOLT HOLES IN CONNECTION PLATES SHALL BE "1 1/16" DIA. (OVERSIZED).

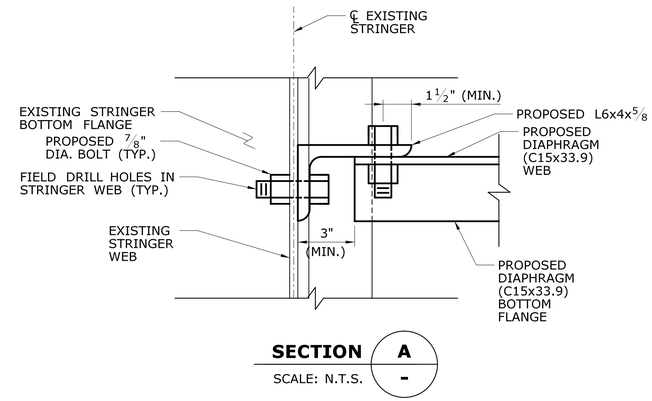

SECTION A -

SCALE: N.T.S.

NOTES:

1. SEE DWG NOS. S-04 THROUGH S-09 FOR REPAIR LOCATIONS AND ADDITIONAL REPAIR NOTES
2. CONTRACTOR SHALL FIELD VERIFY DIMENSIONS AFTER PAINT REMOVAL AND PRIOR TO FABRICATION.
3. THE FAYING SURFACE SHALL BE THOROUGHLY CLEANED AND FREE OF RUST, DIRT, AND OTHER FOREIGN CONTAMINANTS.
4. BOLT THREADS SHALL BE EXCLUDED FROM THE THREAD PLANE.

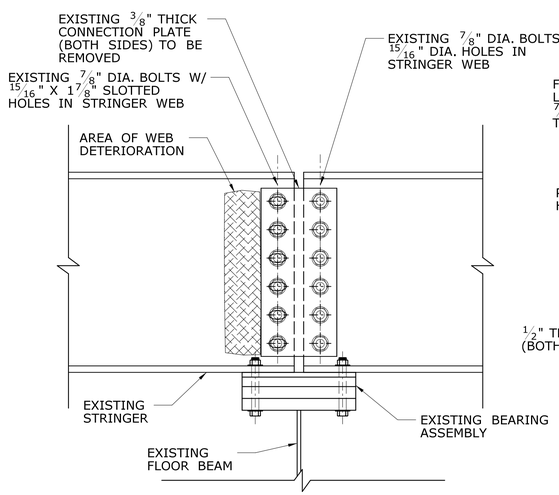

EXISTING CONDITION

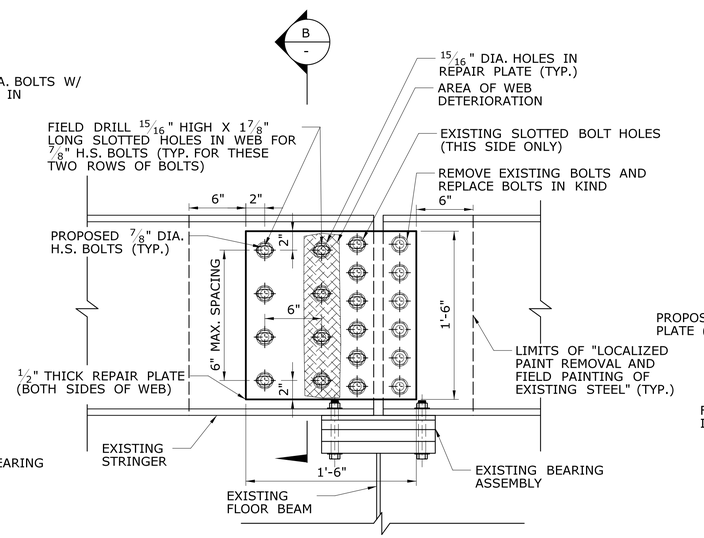

PROPOSED CONDITION

CONDITION REPAIR TYPE S2 - STRINGER WEB REPAIR DETAIL

SCALE: N.T.S.

NOTE:
1. SURFACE PREPARATION OF EXISTING STEEL AND PAINTING OF NEW STEEL PAID FOR UNDER "LOCALIZED PAINT REMOVAL AND FIELD PAINTING OF EXISTING STEEL'.
2. STEEL REPAIRS FOR TYPE S2 SHALL BE PRIME COATED ONLY PRIOR TO DELIVERY TO THE SITE AND SHALL BE PAID FOR UNDER "STRUCTURAL STEEL REPAIRS (SITE NO. 1)"
3. CONTRACTOR TO FIELD VERIFY LOCATIONS OF EXISTING SLOTTED HOLES IN STRINGER WEB. IF THE EXISTING CONDITIONS DO NOT MATCH WHAT IS SHOWN ON THIS DETAIL, THE CONTRACTOR SHALL CONTACT THE ENGINEER.
4. SOUTH ELEVATION OF STRINGER SHOWN.

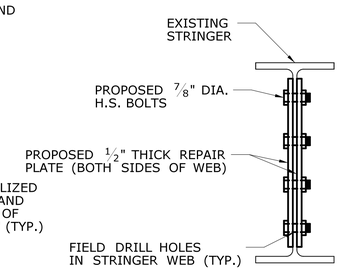

SECTION B -

SCALE: N.T.S.

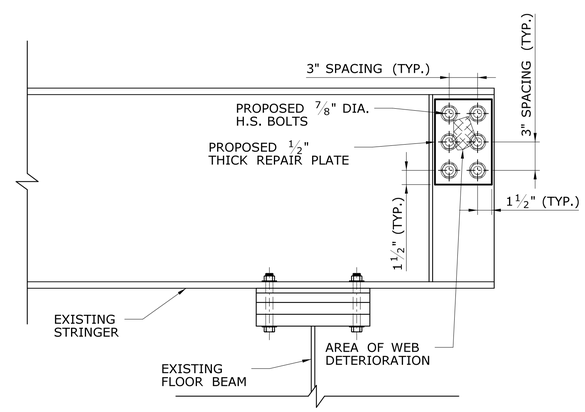

REPAIR S3-A SHOWN, OTHERS ARE SIMILAR

CONDITION REPAIR TYPE S3 - STRINGER WEB REPAIR DETAILS

SCALE: 1½" = 1'-0"

NOTE:
1. AT PERFORATIONS, INSTALL PLATES AT EACH SIDE OF WEB.
2. STEEL REPAIRS FOR TYPE S3 WITHIN THE LIMITS OF THE DEFINED "BEAM END" SHALL BE PAINTED AS PART OF "ABRASIVE BLAST CLEANING AND FIELD PAINTING OF BEAM ENDS".
3. STEEL REPAIRS FOR TYPE S3 SHALL BE PRIME COATED ONLY PRIOR TO DELIVERY TO THE SITE AND PAID FOR UNDER "STRUCTURAL STEEL REPAIRS (SITE NO. 1)"

REV.	DATE	REVISION DESCRIPTION	SHEET NO.

THE INFORMATION, INCLUDING ESTIMATED QUANTITIES OF WORK, SHOWN ON THESE SHEETS IS BASED ON LIMITED INVESTIGATIONS BY THE STATE AND IS IN NO WAY WARRANTED TO INDICATE THE CONDITIONS OF ACTUAL QUANTITIES OF WORK WHICH WILL BE REQUIRED.

Plotted Date: 10/29/2019

DESIGNER/DRAFTER: C.SORENSEN
CHECKED BY: R.MEARS
SCALE AS NOTED

STATE OF CONNECTICUT
DEPARTMENT OF TRANSPORTATION

Filename: ..\SB_MSH_Br03295_139_113_STEEL REPAIR DETAILS 2.dgn

SIGNATURE/BLOCK:
STATE OF CONNECTICUT · ALFRED BENESCH · No. 23541 · LICENSED PROFESSIONAL ENGINEER
Alfred Benesch & Company
120 Hebron Avenue
2nd Floor
Glastonbury, CT

PROJECT TITLE:
REHABILITATION OF BRIDGE NO. 03295 - ROUTE 190 OVER CONNECTICUT RIVER & AMTRAK

TOWN: **SUFFIELD/ENFIELD**

DRAWING TITLE: **STEEL REPAIR DETAILS - 2**

PROJECT NO. **139-113**
DRAWING NO. **S-11**
SHEET NO. **4.11**

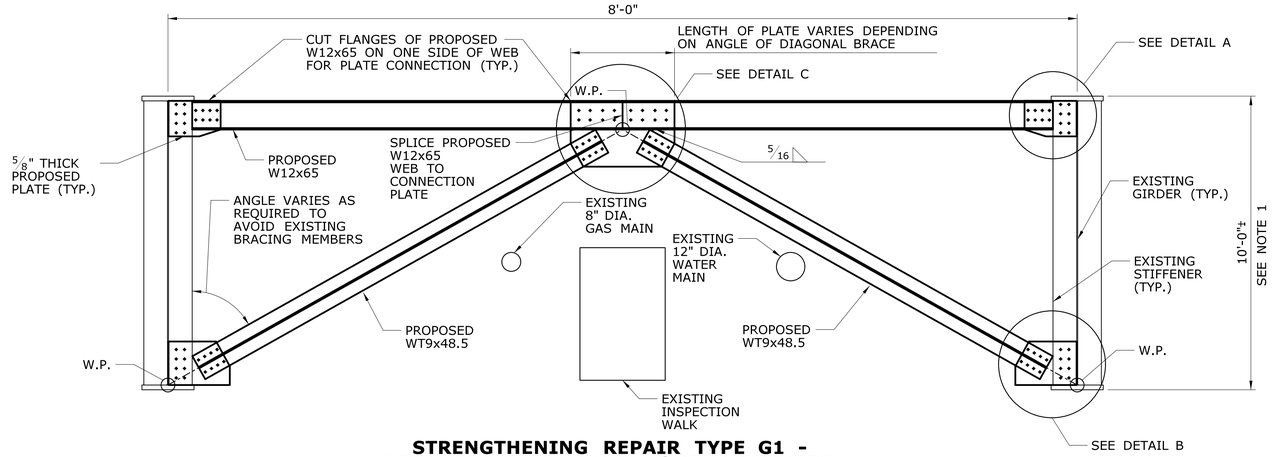

STRENGTHENING REPAIR TYPE G1 - BRACING DETAIL FOR 10' DEEP GIRDERS

SCALE: N.T.S.

NOTE:
1. CONTRACTOR TO PERFORM FIELD MEASUREMENTS PRIOR TO FABRICATION TO ENSURE PROPOSED BRACING MEMBERS AVOID EXISTING DIAGONAL BRACING MEMBERS, UTILITIES AND INSPECTION WALK. GUSSET PLATE SIZES MAY VARY.
2. SURFACE PREPARATION OF EXISTING STEEL AND PAINTING OF EXISTING STEEL SHALL BE PAID UNDER "LOCALIZED PAINT REMOVAL AND FIELD PAINTING OF EXISTING STEEL"
3. ALL NEW STEEL FOR REPAIR TYPE G1 TO BE FULLY PAINTED PRIOR TO DELIVERY TO THE SITE IN ACCORDANCE WITH "STRUCTURAL STEEL (SITE NO. 1)". FAYING SURFACES FOR TYPE G1 SHALL ONLY RECIEVE A PRIME COAT PRIOR TO DELIVERY TO THE SITE IN ACCORDANCE WITH "STRUCTURAL STEEL (SITE NO. 1)"
4. BOLT HOLES IN NEW MEMBERS AND GUSSET PLATES SHALL BE $^{15}/_{16}$" DIA. (STANDARD) FOR $^{7}/_{8}$" DIA. BOLTS. BOLT HOLES IN STIFFENERS SHALL BE "$1^{1}/_{16}$" DIA. (OVERSIZED).

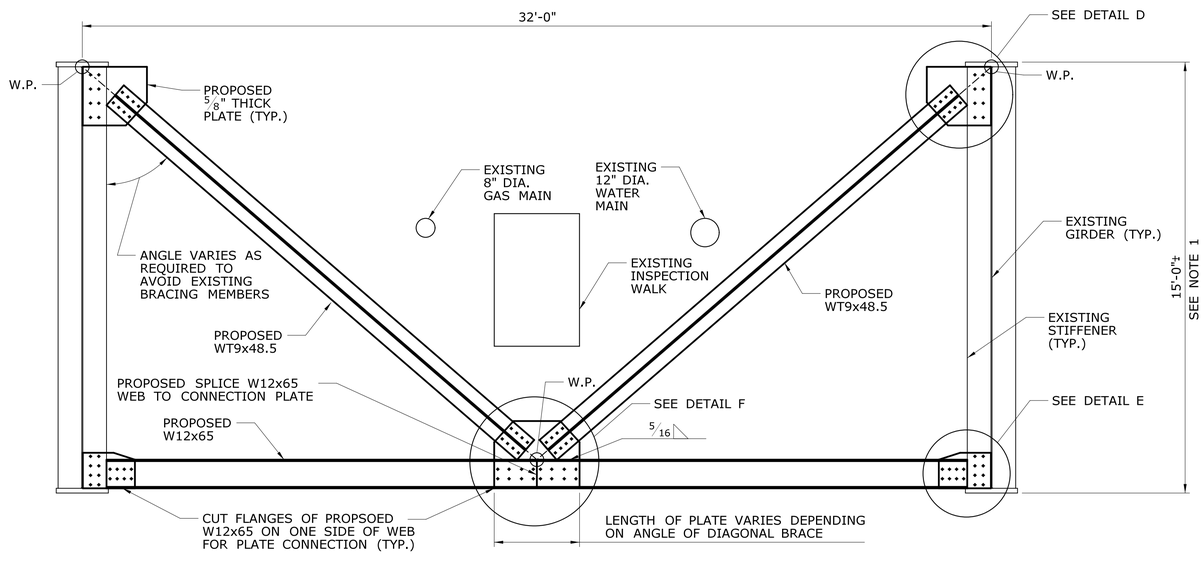

STRENGTHENING REPAIR TYPE G2 - BRACING DETAIL FOR GIRDERS > 10' DEEP

SCALE: N.T.S.

NOTE:
1. CONTRACTOR TO PERFORM FIELD MEASUREMENTS PRIOR TO FABRICATION TO ENSURE PROPOSED BRACING MEMBERS AVOID EXISTING DIAGONAL BRACING MEMBERS, UTILITIES AND INSPECTION WALK. GUSSET PLATE SIZES MAY VARY.
2. SURFACE PREPARATION OF EXISTING STEEL AND PAINTING OF EXISTING STEEL SHALL BE PAID UNDER "LOCALIZED PAINT REMOVAL AND FIELD PAINTING OF EXISTING STEEL"
3. ALL NEW STEEL FOR REPAIR TYPE G2 TO BE FULLY PAINTED PRIOR TO DELIVERY TO THE SITE IN ACCORDANCE WITH "STRUCTURAL STEEL (SITE NO. 1)". FAYING SURFACES FOR TYPE G2 SHALL ONLY RECIEVE A PRIME COAT PRIOR TO DELIVERY TO THE SITE IN ACCORDANCE WITH "STRUCTURAL STEEL (SITE NO. 1)"
4. BOLT HOLES IN NEW MEMBERS AND GUSSET PLATES SHALL BE $^{15}/_{16}$" DIA. (STANDARD) FOR $^{7}/_{8}$" DIA. BOLTS. BOLT HOLES IN STIFFENERS SHALL BE "$1^{1}/_{16}$" DIA. (OVERSIZED).

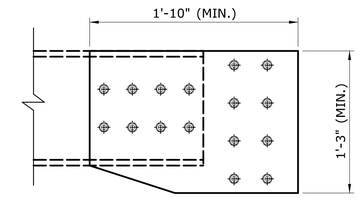

DETAIL A

SCALE: $1^{1}/_{2}$" = 1'-0"

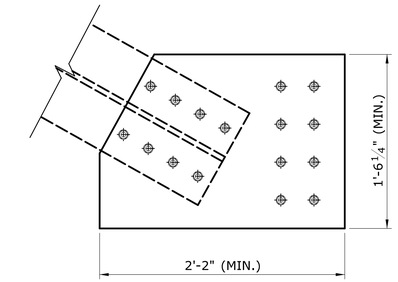

DETAIL B

SCALE: $1^{1}/_{2}$" = 1'-0"

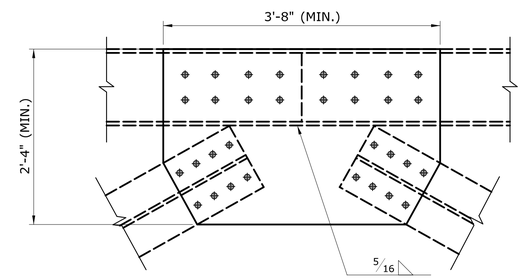

DETAIL C

SCALE: 1" = 1'-0"

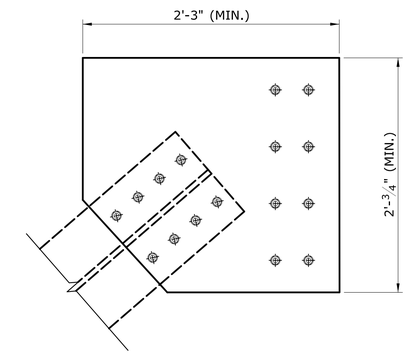

DETAIL D

SCALE: $1^{1}/_{2}$" = 1'-0"

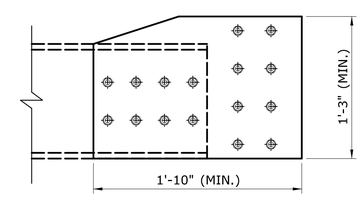

DETAIL E

SCALE: $1^{1}/_{2}$" = 1'-0"

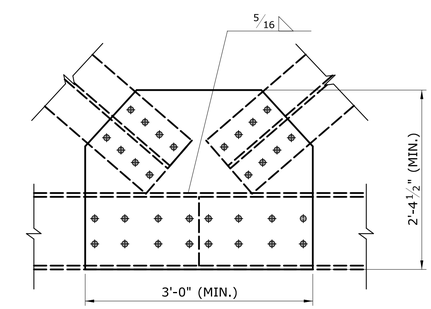

DETAIL F

SCALE: 1" = 1'-0"

NOTES:
1. MINIMUM ACCEPTABLE EDGE DISTANCE FOR BOLTS SHALL BE $1^{1}/_{4}$" (EDGE OF PLATE TO ℄ BOLT).
2. MAXIMUM ACCEPTABLE EDGE DISTANCE FOR BOLTS SHALL BE 3" (EDGE OF PLATE TO ℄ BOLT).
3. MAXIMUM SPACING OF BOLTS SHALL BE $5^{1}/_{2}$"
4. NUMBER OF BOLTS SHOWN IS THE MINIMUM FOR EACH CONNECTION.
5. MINIMUM MEMBER SIZES AND CRITERIA ARE PROVIDED. CONTRACTOR TO PERFORM FIELD MEASUREMENTS PRIOR TO FABRICATION TO ENSURE PROPOSED BRACING MEMBERS AVOID EXISTING DIAGONAL BRACING MEMBERS, UTILITIES AND INSPECTION WALK. GUSSET PLATE SIZES MAY VARY.

REV.	DATE	REVISION DESCRIPTION	SHEET NO.

THE INFORMATION, INCLUDING ESTIMATED QUANTITIES OF WORK, SHOWN ON THESE SHEETS IS BASED ON LIMITED INVESTIGATIONS BY THE STATE AND IS IN NO WAY WARRANTED TO INDICATE THE CONDITIONS OF ACTUAL QUANTITIES OF WORK WHICH WILL BE REQUIRED.

Plotted Date: 10/22/2019

DESIGNER/DRAFTER: M. HABEK
CHECKED BY: R.MEARS
SCALE AS NOTED

STATE OF CONNECTICUT
DEPARTMENT OF TRANSPORTATION

Filename: ...\SB_MSH_Br03295_139_113_STEEL REPAIR DETAILS 3.dgn

SIGNATURE/BLOCK:
STATE OF CONNECTICUT LICENSED PROFESSIONAL ENGINEER No. 23541
Alfred Benesch & Company
120 Hebron Avenue
2nd Floor
Glastonbury, CT

PROJECT TITLE:
REHABILITATION OF BRIDGE NO. 03295 - ROUTE 190 OVER CONNECTICUT RIVER & AMTRAK

TOWN: **SUFFIELD/ENFIELD**

DRAWING TITLE: **STEEL REPAIR DETAILS - 3**

PROJECT NO. **139-113**
DRAWING NO. **S-12**
SHEET NO. **4.12**

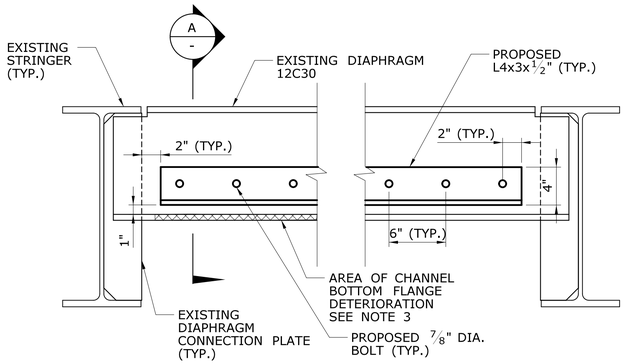

CONDITION REPAIR TYPE D - STRINGER DIAPHRAGM REPAIR DETAIL

SCALE: N.T.S.

NOTE:
1. STEEL REPAIRS FOR TYPE D WITHIN THE LIMITS OF THE DEFINED "BEAM END" SHALL BE PAINTED AS PART OF "ABRASIVE BLAST CLEANING AND FIELD PAINTING OF BEAM ENDS".
2. STEEL REPAIRS FOR TYPE D SHALL BE PRIME COATED ONLY PRIOR TO DELIVERY TO THE SITE AND PAID FOR UNDER "STRUCTURAL STEEL REPAIRS (SITE NO. 1)"
3. IF DETERIORATED AREA IS NOT ABLE TO BE PAINTED, PORTIONS OF THE DETERIORATED AREA ARE TO BE CUT AWAY. IF PERFORATIONS EXIST, CUT BACK TO THICKER MATERIAL AND GRIND PRIOR TO PAINTING.

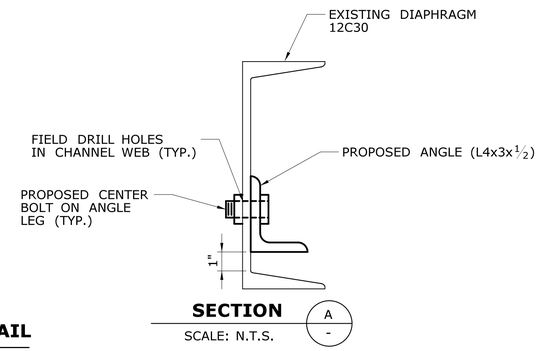

SECTION

SCALE: N.T.S.

NOTES:

1. SEE DWG NO. S-04 THROUGH S-09 FOR REPAIR LOCATIONS AND ADDITIONAL REPAIR NOTES
2. CONTRACTOR SHALL FIELD VERIFY DIMENSIONS AFTER PAINT REMOVAL AND PRIOR TO FABRICATION.
3. THE FAYING SURFACE SHALL BE THOROUGHLY CLEANED AND FREE OF RUST, DIRT, AND OTHER FOREIGN CONTAMINANTS.
4. BOLT THREADS SHALL BE EXCLUDED FROM THE THREAD PLANE.

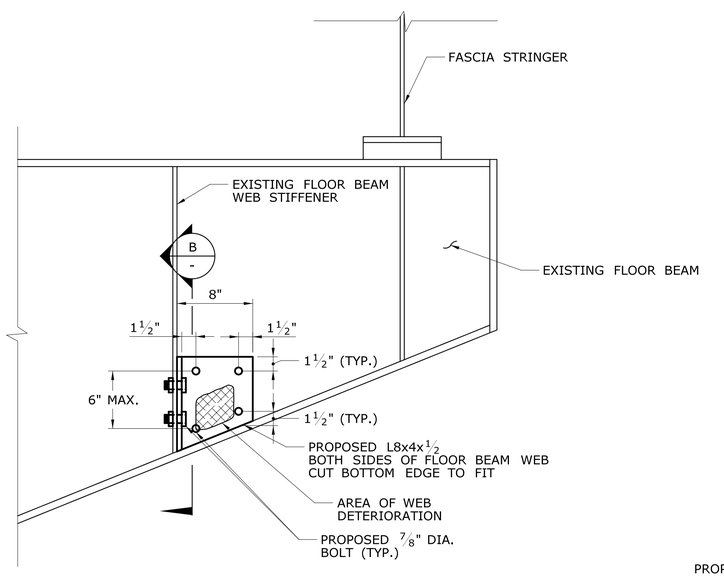

CONDITION REPAIR TYPE F - FLOOR BEAM WEB REPAIR DETAIL

SCALE: N.T.S.

NOTE:
1. AT PERFORATIONS, INSTALL PLATES AT EACH SIDE OF WEB.
2. STEEL REPAIRS FOR TYPE F WITHIN THE LIMITS OF THE DEFINED "BEAM END" SHALL BE PAINTED AS PART OF "ABRASIVE BLAST CLEANING AND FIELD PAINTING OF BEAM ENDS".
3. STEEL REPAIRS FOR TYPE F SHALL BE PRIME COATED ONLY PRIOR TO DELIVERY TO THE SITE AND PAID FOR UNDER "STRUCTURAL STEEL REPAIRS (SITE NO. 1)"
4. IN ORDER TO PREVENT WATER PENETRATION, AFTER INSTALLING THE PROPOSED ANGLE, THE AREA BETWEEN THE PROPOSED ANGLE SHALL BE FULLY COVERED WITH EPOXY CAULK AS SHOWN IN THE CAULKING DETAIL.

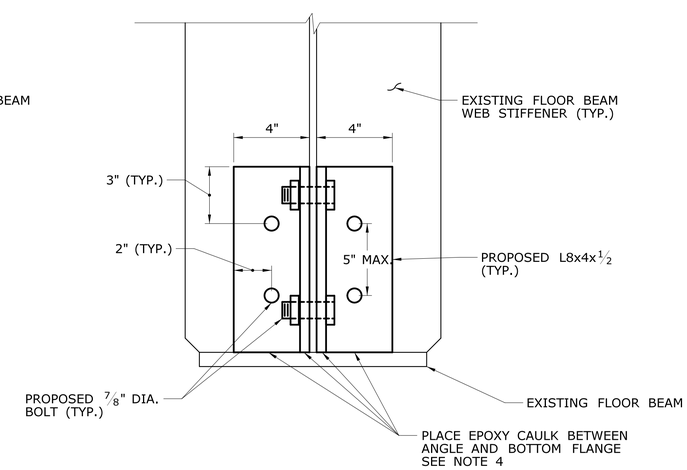

SECTION

SCALE: N.T.S.

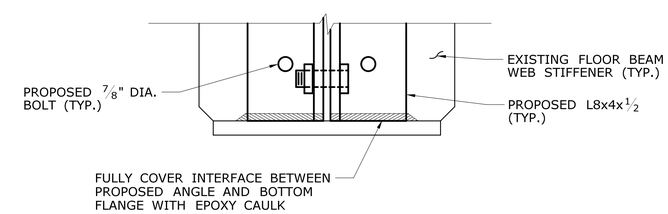

CAULKING DETAIL

SCALE: N.T.S.

NOTE: CAULKING TO BE PAID FOR UNDER THE ITEM "STRUCTURAL STEEL REPAIRS (SITE NO. 1)"

REV.	DATE	REVISION DESCRIPTION	SHEET NO.

THE INFORMATION, INCLUDING ESTIMATED QUANTITIES OF WORK, SHOWN ON THESE SHEETS IS BASED ON LIMITED INVESTIGATIONS BY THE STATE AND IS IN NO WAY WARRANTED TO INDICATE THE CONDITIONS OF ACTUAL QUANTITIES OF WORK WHICH WILL BE REQUIRED.

Plotted Date: 10/22/2019

DESIGNER/DRAFTER: C. SORENSEN
CHECKED BY: R.MEARS
SCALE AS NOTED

STATE OF CONNECTICUT
DEPARTMENT OF TRANSPORTATION

Filename: ...\SB_MSH_Br03295_139_113_STEEL REPAIR DETAILS 4.dgn

SIGNATURE/BLOCK:
Alfred Benesch & Company
120 Hebron Avenue
2nd Floor
Glastonbury, CT

PROJECT TITLE:
REHABILITATION OF BRIDGE NO. 03295 - ROUTE 190 OVER CONNECTICUT RIVER & AMTRAK

TOWN: **SUFFIELD/ENFIELD**

DRAWING TITLE: **STEEL REPAIR DETAILS - 4**

PROJECT NO. **139-113**
DRAWING NO. **S-13**
SHEET NO. **4.13**

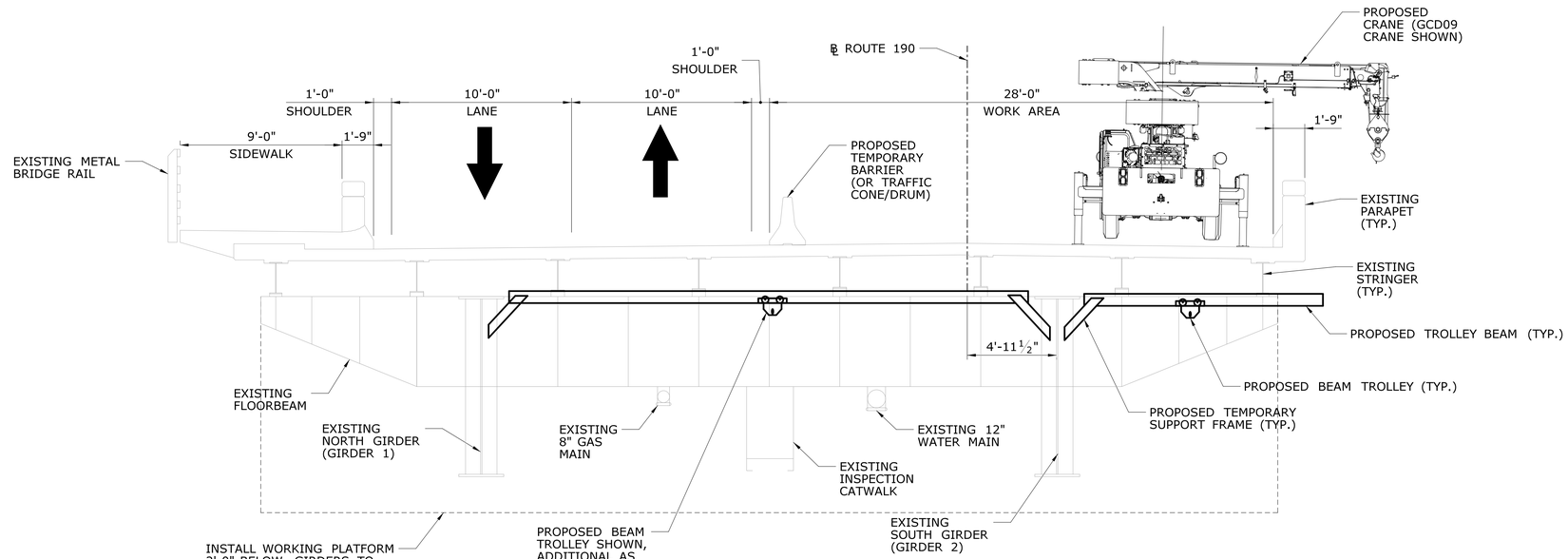

TYPICAL BRIDGE SECTION

SCALE: 1/4" = 1'-0"

CONSTRUCTION LOADING NOTES

1. CONSTRUCTION PLATFORM:
   ASSUMED LIVE LOAD = 50 PSF
   ASSUMED DEAD LOAD = 15 PSF
   ASSUMED ATTACHMENT POINTS: GIRDERS 1 & 2 AND STRINGERS 1, 2, 7 & 8

2. SIMPLE SPANS (SPANS A-C, G & H):
   -WORK PLATFORM CAN EXTEND THE ENTIRE LENGTH OF THE SPAN, IF NEEDED.
   -ONLY ONE SPAN SHALL BE LOADED AT A TIME.

3. CONTINUOUS SPANS (SPANS D-F):
   -WORK SHALL BE DONE IN STAGES AS DESCRIBED BELOW TO ACCOMMODATE EXISTING REDUCED CAPACITY OF THE BRIDGE (REPAIRS IN CERTAIN AREAS REQUIRED BEFORE PROCEEDING TO OTHER LOCATIONS):
   STAGE 1: WORK PLATFORM AT PIER 4 - 20 FEET AT BOTH SIDES OF PIER.
   STAGE 2: WORK PLATFORM AT PIER 5 - 20 FEET AT BOTH SIDES OF PIER.
   STAGE 3: WORK PLATFORM IN SPAN D UP TO 20 FEET BEFORE PIER 4 (±87% OF SPAN).
   STAGE 4: WORK PLATFORM IN SPAN E STARTING 20 FEET AFTER PIER 4 AND ENDING 20 FEET BEFORE PIER 5 (MIDDLE 80% OF SPAN).
   STAGE 5: WORK PLATFORM IN SPAN F STARTING 20 FEET AFTER PIER 5 AND CONTINUING FOR THE REMAINDER OF THE SPAN (±87% OF SPAN).

4. DURING CONSTRUCTION, THE FOLLOWING VEHICLES SHALL BE RESTRICTED FROM THE BRIDGE:
   LEGAL LOADS: TYPE EV2, TYPE EV3
   PERMIT LOADS: CT-P76.5, CT-P120(6), CT-P140(7)a, CT-P140(7)b, CT-P160(8)a, CT-P160(8)b, CT-P180(9), CT-P200(10), CT-P380, CT-TLC

SUGGESTED SEQUENCE OF CONSTRUCTION

1. MILLING AND PAVING OPERATIONS SHALL OCCUR AFTER STRENGTHENING REPAIRS ARE COMPLETE AND WORK PLATFORMS ARE REMOVED.

2. THE TROLLEY BEAM AND TROLLEY SCHEMATICALLY SHOWN IS TO PROVIDE A MEANS FOR ERECTING STEEL FOR STRENGTHENING REPAIRS G1 & G2. OTHER METHODS ARE ALLOWED BUT SHALL BE SUBMITTED TO THE ENGINEER FOR APPROVAL.

3. STEEL MEMBERS FOR G1 & G2 STRENGTHENING REPAIRS SHALL BE LOWERED OVER THE BRIDGE FASCIA VIA CRANE AND SUPPORT CABLES.

4. THE MEMBERS SHALL THEN BE ATTACHED TO THE FASCIA TROLLEY VIA SUPPORT CABLES/CHAIN AND THE ATTACHMENT TO THE CRANE REMOVED.

5. THE BEAM TROLLEY (FASCIA) SHALL BE SLID OVER TOWARDS GIRDER 2 AND STEEL MEMBER LOWERED.

6. THE STEEL MEMBER SHALL THEN BE CONNECTED TO THE TROLLEY BEAM BETWEEN GIRDERS 1 & 2; AND ATTACHMENT TO FASCIA TROLLEY BEAM REMOVED.

7. THE STEEL MEMBER IS HOISTED INTO PLACE VIA SUPPORT CABLES/CHAINS.

8. REPEAT AS NECESSARY.

CRANE AND ERECTION NOTES

1. THE CRANE IS LIMITED TO PLACEMENT AS SHOWN ALONG THE SOUTH EDGE OF THE ROAD. ACCESS TO THE NORTH, WITH A CRANE OVER THE SIDEWALK SHALL NOT BE PERMITTED.

2. THE SUGGESTED ERECTION PROCEDURE DEPICTED HERE REPRESENTS ONE POTENTIAL SCHEME. ALTERNATE CONSTRUCTION SCHEMES, INCLUDING ALTERNATE CRANES MAY BE USED WITH THE APPROVAL OF THE ENGINEER.

3. THE COST OF THE CRANE, FOR ERECTION OF THE SUPERSTRUCTURE, SHALL BE INCLUDED UNDER THE ITEM "STRUCTURAL STEEL REPAIRS (SITE NO. 1)".

4. DESIGN / WORKING DRAWINGS SHALL BE SUBMITTED FOR THE ERECTION SEQUENCE, INCLUDING BUT NOT LIMITED TO THE TROLLEY BEAM

				CRANE		
PIECE	PIECE WT. (KIPS)	SAFETY FACTOR	PICK WT. (KIPS)	PICK WT. (KIPS)	PICK RAD. (FT)	CAPACITY (KIPS)
W12x65 BRACE	1.5	1.25	2	2	18	4.51

NOTES:
1. CRANE CAPACITIES ARE BASED ON GROVE GCD09. OTHER CRANES MAY VARY.
2. PICK WEIGHT SHALL NOT BE EXCEEDED WITHOUT THE APPROVAL OF THE ENGINEER.
3. W12x65 SHOWN IN TABLE IS FOR (1) 16' +/- LONG MEMBER

REV.	DATE	REVISION DESCRIPTION	SHEET NO.

THE INFORMATION, INCLUDING ESTIMATED QUANTITIES OF WORK, SHOWN ON THESE SHEETS IS BASED ON LIMITED INVESTIGATIONS BY THE STATE AND IS IN NO WAY WARRANTED TO INDICATE THE CONDITIONS OF ACTUAL QUANTITIES OF WORK WHICH WILL BE REQUIRED.

Plotted Date: 10/29/2019

DESIGNER/DRAFTER: C. SORENSEN
CHECKED BY: R.MEARS
SCALE AS NOTED

STATE OF CONNECTICUT
DEPARTMENT OF TRANSPORTATION

Filename: ...\SB_MSH_Br03295_139_113_STEEL REPAIR SEQUENCE.dgn

SIGNATURE/BLOCK:
STATE OF CONNECTICUT STEPHEN J. DECRESCENTE No. 23441 LICENSED PROFESSIONAL ENGINEER
Alfred Benesch & Company
120 Hebron Avenue
2nd Floor
Glastonbury, CT

PROJECT TITLE:
REHABILITATION OF BRIDGE NO. 03295 - ROUTE 190 OVER CONNECTICUT RIVER & AMTRAK

TOWN: **SUFFIELD/ENFIELD**

DRAWING TITLE: **STEEL REPAIR CONSTRUCTION SEQUENCE**

PROJECT NO. **139-113**
DRAWING NO. **S-14**
SHEET NO. **4.14**

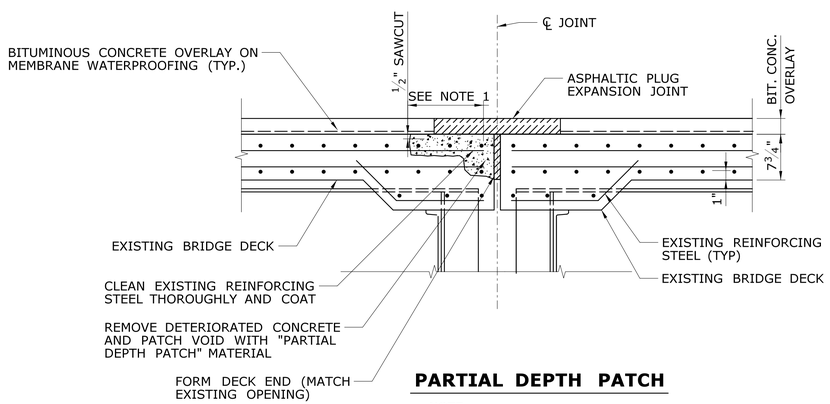

PARTIAL DEPTH PATCH

NOTE:
1. CONCRETE PATCH SHALL ENGAGE AT LEAST 3 TOP BARS AND 1 BAR IN THE SECOND MAT OF DECK REINFORCING. REMOVAL OF CONCRETE SHALL BE A MINIMUM OF 1" BEHIND THE REINFORCING BAR.
2. PIER 2 JOINT SHOWN.

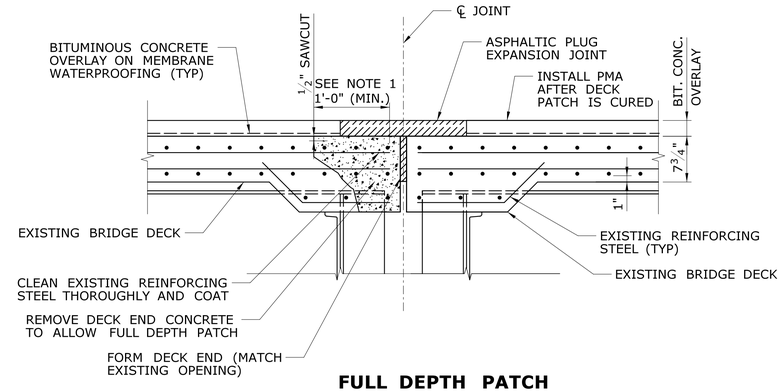

FULL DEPTH PATCH

NOTE:
1. DEVELOP BAR ANCHORAGE OVER A MINIMUM OF 1'-0". ENGAGE 3 OR MORE TRANSVERSE BARS. REMOVAL OF CONCRETE SHALL BE A MINIMUM OF 1" BEHIND THE REINFORCING BAR.
2. PIER 2 JOINT SHOWN.

DECK END DETERIORATION DETAILS

SCALE: 1" = 1'-0"

DECK END DETERIORATION NOTES:

("PARTIAL DEPTH PATCH" AND "FULL DEPTH PATCH" APPLIES ONLY TO RECONSTRUCTION OF THE DECK ENDS AT LOCATIONS OF JOINT REPLACEMENT.)

1. IF AFTER CONCRETE REMOVAL THE REINFORCING STEEL HAS AT LEAST ONE HALF OF ITS SURFACE AREA EXPOSED, THE CONCRETE SHALL BE FURTHER REMOVED TO A DEPTH OF 1" BELOW THE STEEL. IN AREAS WHERE REINFORCING STEEL IS ONLY PARTIALLY EXPOSED AFTER REMOVAL OF DETERIORATED CONCRETE, THE REINFORCEMENT SHALL BE COATED WITH EPOXY BONDING COMPOUND (SEE SPECIAL PROVISIONS) BEFORE PLACING "PARTIAL DEPTH PATCH" MATERIAL.

2. IF REMOVAL OF DETERIORATED CONCRETE FOR "PARTIAL DEPTH PATCH" EXCEEDS TWO-THIRDS OF THE TOTAL THICKNESS OF THE SLAB, REMOVE THE REMAINDER OF THE CONCRETE TO THE BOTTOM OF THE SLAB AND PERFORM "FULL DEPTH PATCH." FINAL PAYMENT SHALL BE MADE AS "FULL DEPTH PATCH (HIGH EARLY STRENGTH CONCRETE)" ONLY, (SEE SPECIAL PROVISIONS).

3. DECK PATCHING WORK ON THE TOP SURFACE SHALL BE PERFORMED IN ACCORDANCE WITH THE SPECIAL PROVISIONS "MAINTENANCE AND PROTECTION OF TRAFFIC" AND "PROSECUTION AND PROGRESS".

4. FINAL PAVING SHALL NOT BE PERFORMED UNTIL DECK REPAIRS HAVE BEEN COMPLETED (TOP AND BOTTOM SURFACE) AND STEEL STRENGTHENING COMPLETED AS INDICATED ON DWG NO. S-14.

GENERAL CONCRETE REPAIR NOTES:

1. INSTALL PROTECTIVE SHIELDING UNDER SPANS OVER THE MULTI-USE TRAIL, NAVIGABLE WATERWAY AND RAILROAD TRACKS TO PROTECT TRAFFIC FROM POSSIBLE FALLING DEBRIS. THE COST OF WHICH SHALL BE INCLUDED IN THE CONCRETE REPAIR ITEMS. DEBRIS SHIELDS OR CONSTRUCTION PLATFORMS CONSTRUCTED OVER THE RAILROAD SHALL MEET THE REQUIREMENTS OF AMTRAK (SEE NTC).

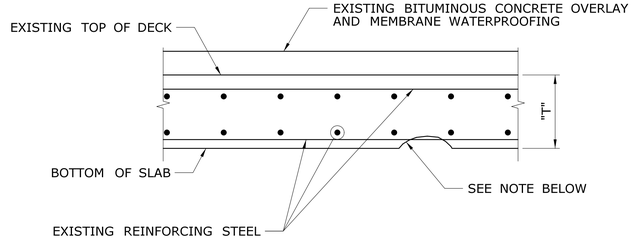

TYPICAL DECK UNDERSIDE DETERIORATION

SCALE: 1 1/2" = 1'-0"

NOTE:
1. SPALLED, DELAMINATED OR OTHERWISE DETERIORATED CONCRETE FROM THE UNDERSIDE OF DECK SHALL BE REMOVED. EXPOSED REINFORCING STEEL SHALL BE CLEANED AND COATED WITH ZINC-RICH PRIMER WITHIN SPALLS. THIS WORK SHALL BE PAID FOR UNDER THE ITEM "CLEAN AND COAT EXPOSED REINFORCING STEEL."
2. SHOULD REMOVAL OF THE UNDERSIDE OF DECK CONCRETE EXTEND BEYOND THE FIRST LAYER OF REBAR THE CONTRACTOR SHALL STOP AND NOTIFY THE ENGINEER.

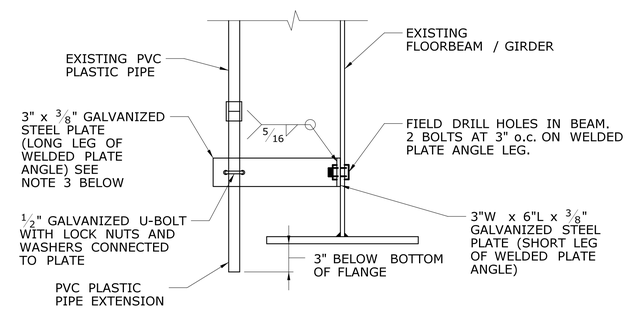

DECK WEEPHOLE EXTENSION

SCALE: 1 1/2"=1'-0"

NOTE:
1. ALL WORK PAID FOR UNDER "EXTEND EXISTING WEEPHOLES"
2. AT LOCATIONS WHERE THE PVC PLASTIC PIPE IS CLOSE TO FLOORBEAM, THE PIPE SHALL EXTEND 3" BELOW THE BOTTOM FLANGE OF THE FLOORBEAM.
3. CONTRACTOR TO DETERMINE LENGTH OF PLATE REQUIRED IN FIELD.
4. 3" x 3/8" GALVANIZED STEEL PLATE SHALL BE PAID FOR UNDER "STRUCTURAL STEEL REPAIRS (SITE NO. 1)."

REV.	DATE	REVISION DESCRIPTION	SHEET NO.

THE INFORMATION, INCLUDING ESTIMATED QUANTITIES OF WORK, SHOWN ON THESE SHEETS IS BASED ON LIMITED INVESTIGATIONS BY THE STATE AND IS IN NO WAY WARRANTED TO INDICATE THE CONDITIONS OF ACTUAL QUANTITIES OF WORK WHICH WILL BE REQUIRED.

Plotted Date: 10/14/2019

DESIGNER/DRAFTER: C. SORENSEN
CHECKED BY: R. MEARS
SCALE AS NOTED

STATE OF CONNECTICUT
DEPARTMENT OF TRANSPORTATION

Filename: ..\SB_MSH_Br03295_139_113_DECK DETAILS 1.dgn

SIGNATURE/BLOCK:
STATE OF CONNECTICUT STEVEN J. DRESCHER JR. LICENSED PROFESSIONAL ENGINEER No. 22641
Alfred Benesch & Company
120 Hebron Avenue
2nd Floor
Glastonbury, CT

PROJECT TITLE:
REHABILITATION OF BRIDGE NO. 03295 - ROUTE 190 OVER CONNECTICUT RIVER & AMTRAK

TOWN: SUFFIELD/ENFIELD

DRAWING TITLE: DECK REPAIR DETAILS - 1

PROJECT NO. 139-113
DRAWING NO. S-15
SHEET NO. 4.15

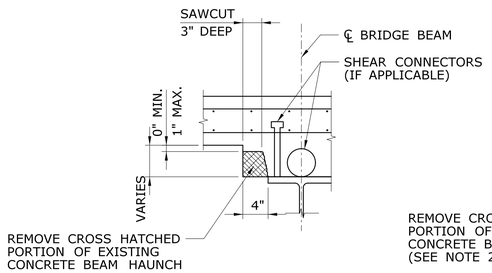

TYPICAL REMOVAL METHOD
USING HORIZONTAL SAWCUT

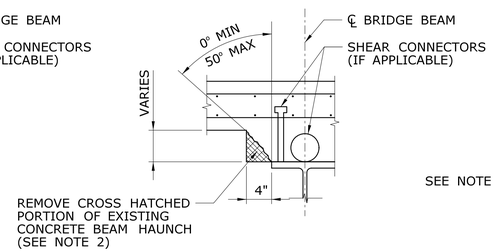

EXISTING CONDITION

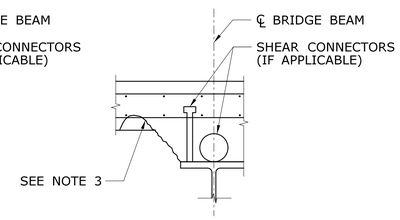

FINAL CONDITION

DETAILS FOR INACCESSIBLE LOCATIONS ONLY
HORIZONTAL SAW CUT OMITTED

(SEE CONCRETE HAUNCH REMOVAL NOTE 2)

CONCRETE HAUNCH REMOVAL DETAILS

SCALE: 1" = 1'-0"

CONCRETE HAUNCH REMOVAL NOTES:

1. THE REMOVAL OF THE PORTION OF THE CONCRETE HAUNCH SHOWN SHALL BE PAID FOR AT THE CONTRACT UNIT PRICE PER LINEAR FOOT FOR "CONCRETE HAUNCH REMOVAL."
2. THIS METHOD TO BE USED ONLY IN THOSE AREAS HAVING INSUFFICIENT CLEARANCE FOR SAW-CUTTING EQUIPMENT. AREAS MAY INCLUDE LOCATIONS ABOVE DIAPHRAGMS OR OTHER LOCATIONS DIRECTED BY THE ENGINEER.
3. IF OVER-REMOVAL RESULTS, APPLY TWO COATS OF A ZINC-RICH PRIMER TO DECK REINFORCING STEEL EXPOSED DURING HAUNCH REMOVAL. ALL REASONABLE PRECAUTIONS SHALL BE TAKEN TO AVOID THIS CONDITION. NO SEPARATE PAYMENT SHALL BE MADE FOR APPLYING THE ZINC-RICH PRIMER. FOR MATERIAL REQUIREMENTS REFER TO ITEM "CLEAN AND COAT EXPOSED REINFORCING STEEL".
4. TYPICALLY, WIDE HAUNCHES SHALL BE REMOVED ALONG BOTH EDGES OF INTERIOR BEAM FLANGES. ONLY THE WIDENED HAUNCH ON THE INSIDE OF FASCIA BEAMS SHALL BE REMOVED, UNLESS DIRECTED OTHERWISE BY THE ENGINEER
5. THIS WORK IS PROPOSED IN SPANS OVER THE MULTI-USE TRAIL, THE NAVIGABLE PORTION OF THE CHANNEL AND AMTRAK RAILROAD.

REV.	DATE	REVISION DESCRIPTION	SHEET NO.

THE INFORMATION, INCLUDING ESTIMATED QUANTITIES OF WORK, SHOWN ON THESE SHEETS IS BASED ON LIMITED INVESTIGATIONS BY THE STATE AND IS IN NO WAY WARRANTED TO INDICATE THE CONDITIONS OF ACTUAL QUANTITIES OF WORK WHICH WILL BE REQUIRED.

Plotted Date: 10/10/2019

DESIGNER/DRAFTER: C. SORENSEN
CHECKED BY: R. MEARS
SCALE AS NOTED

STATE OF CONNECTICUT
DEPARTMENT OF TRANSPORTATION

Filename: ...\SB_MSH_Br03295_139_113_DECK DETAILS 2.dgn

SIGNATURE/ BLOCK:
STATE OF CONNECTICUT · STEVEN J. DRESCHER · No. 23641 · LICENSED · PROFESSIONAL ENGINEER
Alfred Benesch & Company
120 Hebron Avenue
2nd Floor
Glastonbury, CT

PROJECT TITLE:
REHABILITATION OF BRIDGE NO. 03295 - ROUTE 190 OVER CONNECTICUT RIVER & AMTRAK

TOWN: **SUFFIELD/ENFIELD**

DRAWING TITLE: **DECK REPAIR DETAILS - 2**

PROJECT NO. **139-113**
DRAWING NO. **S-16**
SHEET NO. **4.16**

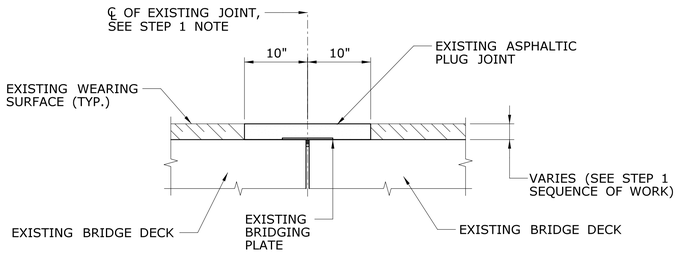

NOTE:
ALL DIMENSIONS THAT REFER TO EXISTING CONSTRUCTION SHALL BE VERIFIED BY THE CONTRACTOR.

EXISTING CONDITION @ PIERS 2, 7 & 8

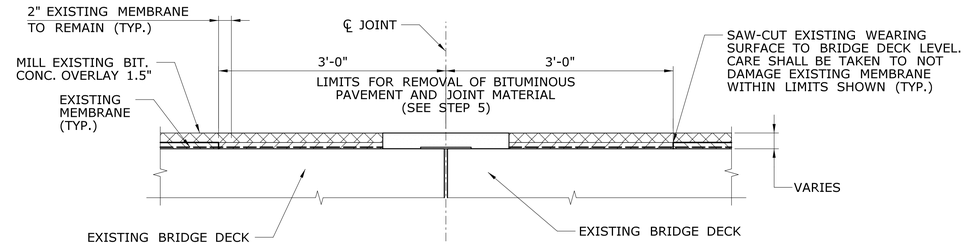

INTERMEDIATE CONDITION
JOINT AND PAVEMENT REMOVAL (STEPS 1-5)

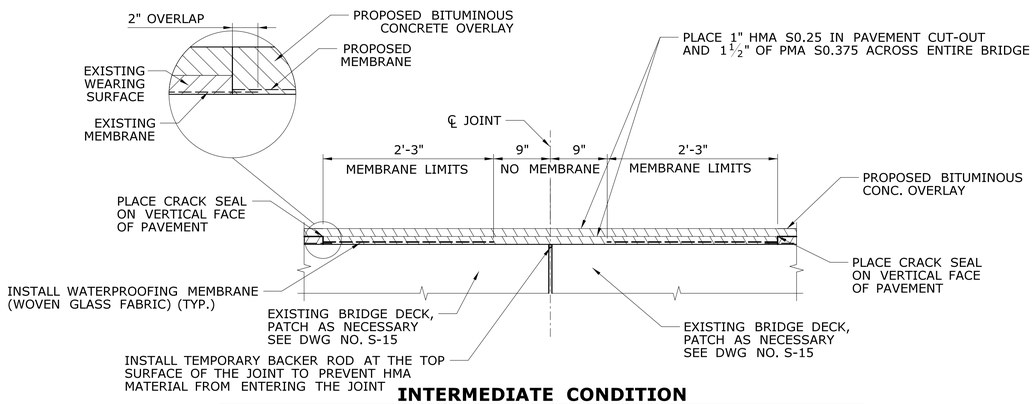

INTERMEDIATE CONDITION
PLACEMENT OF PAVEMENT IN JOINT CUTOUT (STEPS 6-12)

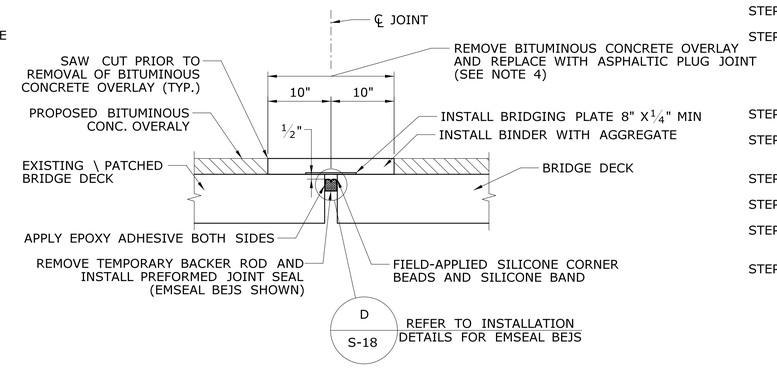

FINAL CONDITION
(STEPS 13-14)

JOINT REPLACEMENT SEQUENCE

SCALE: 1" = 1'-0"

ASPHALTIC PLUG EXPANSION JOINT SYSTEM AT PIERS 2, 7 & 8

SEQUENCE OF WORK

NOTE: THE PREFORMED JOINT SEAL SHOWN ON THE DECK JOINT DETAIL DRAWINGS IS BASED ON THE EMSEAL BRIDGE EXPANSION JOINT SYSTEM. CONTRACTOR MAY SUBMIT A DIFFERENT PREFORMED JOINT SEAL (APPROVED EQUAL) TO THE ENGINEER FOR APPROVAL. SEE SPECIAL PROVISIONS.

STEP 1: CONTRACTOR SHALL PERFORM AN EXPLORATION AT THE GUTTERLINE TO DETERMINE THE DEPTH OF PAVEMENT AND THE LOCATION OF THE DECK END (CENTERLINE OF PROPOSED JOINT) BEFORE PROCEEDING TO STEP 2. CONTRACTOR SHALL ALSO MEASURE THE DECK JOINT GAP OPENING FOR SIZING OF PREFORMED JOINT SEAL. PREFORMED JOINT SEAL IS MADE TO ORDER. THE MANUFACTURER REQUIRES A MINIMUM OF THREE WEEKS LEAD TIME TO FABRICATE THE BRIDGE SEALS.

STEP 2: THE CONTRACTOR IS RESPONSIBLE FOR FILLING OUT THE PREFORMED JOINT SEAL CHECKLIST FOR EACH JOINT LOCATION. THE CHECKLIST SHALL BE FORWARDED TO PREFORMED JOINT SEAL MANUFACTURER AND BRIDGE DESIGN FOR REVIEW.

STEP 3: MILL 1.5" OF EXISTING BITUMINOUS OVERLAY WITHIN BRIDGE LIMITS DETERMINED BY THE NUMBER OF JOINTS WHICH CAN BE REPLACED WITHIN A 14-DAY PERIOD.

STEP 4: SAW-CUT BITUMINOUS PAVEMENT ON BOTH SIDES OF EXISTING JOINT FOR PAVEMENT CUT-OUT. EACH SAW-CUT LINE SHALL BE 3' FROM THE CENTERLINE OF THE EXISTING JOINT. SAW-CUT SHALL NOT DAMAGE EXISTING DECK AND MEMBRANE WATERPROOFING.

STEP 5: REMOVE EXISTING PAVEMENT MATERIAL, MEMBRANE (IF PRESENT), AND JOINT MATERIAL INCLUDING BACKING PLATE WITHIN THE LIMITS SHOWN.

STEP 6: INSTALL TEMPORARY BACKER ROD FLUSH WITH THE BRIDGE DECK.

STEP 7: REPAIR DETERIORATED TOP SURFACE OF CONCRETE DECK AS REQUIRED.

STEP 8 (OPTIONAL):
INSTALL TEMPORARY PAVEMENT WITH BOND BREAKER IF REMAINING WORK CANNOT BE COMPLETED BEFORE OPENING HIGHWAY TO TRAFFIC. TEMPORARY PAVEMENT SHALL BE REMOVED PRIOR TO PROCEEDING TO STEP 9.

STEP 9: INSTALL MEMBRANE TO THE TOP OF DECK WITHIN THE LIMITS SHOWN.

STEP 10: PLACE CRACK SEALANT ON VERTICAL EDGE OF PAVEMENT ALONG SAW-CUT LINES.

STEP 11: PLACE 1" HMA S0.25 TRAFFIC LEVEL 2 IN THE JOINT CUTOUT.

STEP 12: PLACE PMA S0.375 OVER THE MILLED PORTION OF THE BRIDGE.

STEP 13: CUT PAVEMENT FULL DEPTH, 10" EACH SIDE OF CENTER OF JOINT, AND REMOVE ALL PAVEMENT MATERIAL BETWEEN SAW-CUTS.

STEP 14: INSTALL PROPOSED ASPHALTIC PLUG EXPANSION JOINT SYSTEM WITH PREFORMED JOINT SEAL AND BRIDGING PLATE. LOCATING PINS SHALL NOT BE USED TO SECURE THE BRIDGING PLATE.

(REPEAT SEQUENCE UNTIL ALL ASPHALTIC PLUG DECK JOINTS AT PIERS ARE REPLACED)

ASPHALTIC PLUG EXPANSION JOINT NOTES:

1. REMOVAL OF BITUMINOUS CONCRETE OVERLAY AND REPLACEMENT WITH ASPHALTIC PLUG EXPANSION JOINT SYSTEM TO BE PAID FOR UNDER THE ITEM "ASPHALTIC PLUG EXPANSION JOINT SYSTEM". (SEE SPECIAL PROVISION)

2. REPAIR CONCRETE BRIDGE DECK AS NEEDED TO BE PAID FOR UNDER "FULL DEPTH PATCH (HIGH EARLY STRENGTH CONCRETE)" OR "PARTIAL DEPTH PATCH".

3. SAW-CUTS MADE 3' EACH SIDE OF CENTERLINE OF JOINT WILL BE PAID AS "CUT BITUMINOUS CONCRETE PAVEMENT".

4. SAW-CUTS MADE 10" EACH SIDE OF CENTERLINE OF JOINT WILL BE INCLUDED IN THE COST OF "ASPHALTIC PLUG EXPANSION JOINT SYSTEM".

5. THE REMOVAL OF ALL EXISTING JOINT SYSTEMS AND BITUMINOUS CONCRETE WITHIN THE LIMITS SHOWN TO BE INCLUDED FOR PAYMENT UNDER THE ITEM, "REMOVAL OF EXISTING WEARING SURFACE".

6. INSTALLATION OF MEMBRANE WITHIN THE LIMITS SHOWN TO BE PAID UNDER THE ITEM, "MEMBRANE WATERPROOFING (WOVEN GLASS FABRIC)".

7. CRACK SEALANT PLACED ALONG VERTICAL FACES OF THE SAW-CUT PAVEMENT TO BE PAID UNDER THE ITEM, "JOINT AND CRACK SEALING OF BITUMINOUS CONCRETE PAVEMENT".

8. TEMPORARY CLOSED CELL BACKER ROD DIAMETER SHALL BE DETERMINED AFTER MEASURING THE JOINT OPENING. THE ROD SHALL BE 25% LARGER THAN THE JOINT OPENING.

9. THE FURNISHING AND PLACING OF HMA S0.25 AND PMA S0.375 TO BE INCLUDED FOR PAYMENT UNDER THE ITEMS "HMA S0.25" AND "PMA S0.375" RESPECTIVELY.

10. PREFORMED JOINT SEAL (EMSEAL) PAID UNDER "PREFORMED JOINT SEAL".

REV.	DATE	REVISION DESCRIPTION	SHEET NO.

THE INFORMATION, INCLUDING ESTIMATED QUANTITIES OF WORK, SHOWN ON THESE SHEETS IS BASED ON LIMITED INVESTIGATIONS BY THE STATE AND IS IN NO WAY WARRANTED TO INDICATE THE CONDITIONS OF ACTUAL QUANTITIES OF WORK WHICH WILL BE REQUIRED.

Plotted Date: 10/29/2019

DESIGNER/DRAFTER: C. SORENSEN
CHECKED BY: R. MEARS
SCALE AS NOTED

STATE OF CONNECTICUT
DEPARTMENT OF TRANSPORTATION

Filename: ..\SB_MSH_Br03295_139_113_DECK JOINTS 1.dgn

SIGNATURE/BLOCK:
Alfred Benesch & Company
120 Hebron Avenue
2nd Floor
Glastonbury, CT

PROJECT TITLE:
REHABILITATION OF BRIDGE NO. 03295 - ROUTE 190 OVER CONNECTICUT RIVER & AMTRAK

TOWN: SUFFIELD/ENFIELD

DRAWING TITLE: DECK JOINT DETAILS - 1

PROJECT NO. 139-113
DRAWING NO. S-17
SHEET NO. 4.17

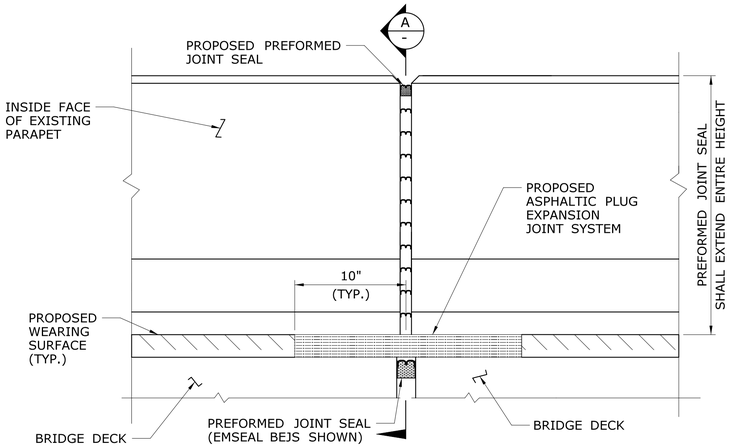

ELEVATION - PROPOSED JOINT TREATMENT AT PARAPET JOINT (PIERS 2 & 8)

NOT TO SCALE

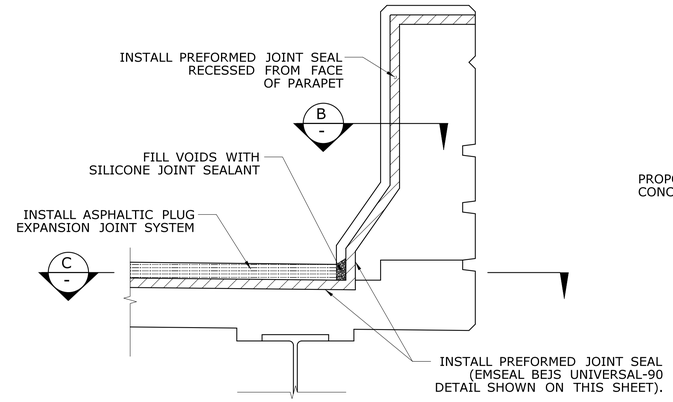

SECTION - PROPOSED SOUTH PARAPET JOINT TREATMENT (PIERS 2 & 8)

NOT TO SCALE

A
-

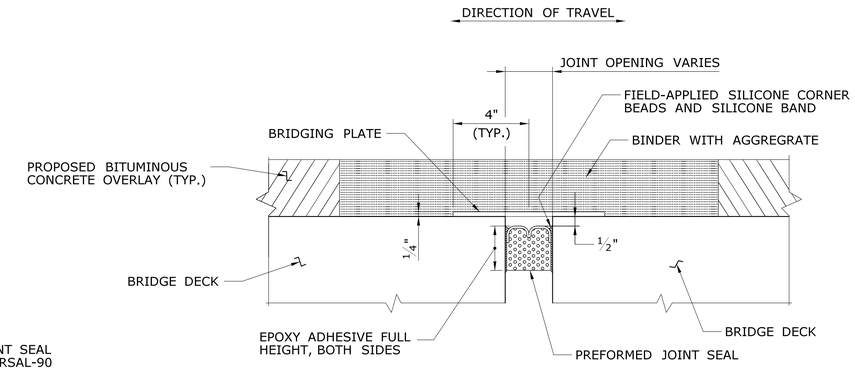

EMSEAL BRIDGE EXPANSION JOINT SYSTEM (BEJS)

SECTION - PREFORMED JOINT SEAL IN BRIDGE DECK

NOT TO SCALE

D
S-17

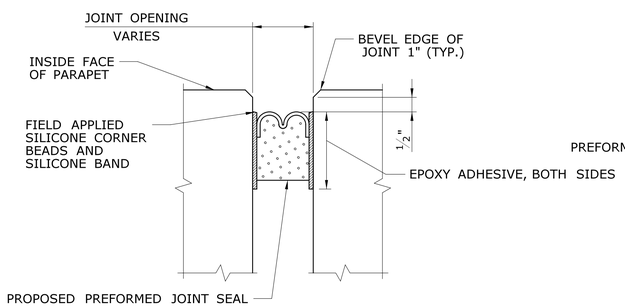

PROPOSED JOINT TREATMENT AT PARAPET

NOT TO SCALE

B
-

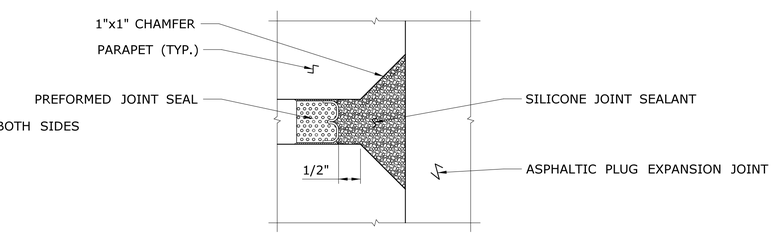

PARAPET JOINT SEAL

NOT TO SCALE

NORTH PARAPET SHOWN
SOUT PARAPET SIMILAR

C
-

NOTES FOR SEALING JOINTS

1. ANY EXISTING BACKER ROD AND JOINT SEALANT SHALL BE COMPLETELY REMOVED PRIOR TO INSTALLING NEW JOINT SEAL.
2. SURFACES OF CONCRETE ALONG JOINT SHALL BE CLEANED BY ABRASIVE BLAST CLEANING. SURFACES TO WHICH EPOXY ADHESIVE WILL ADHERE SHALL BE FREE OF DUST AND LOOSE OR DETERIORATED CONCRETE BEFORE INSTALLING PREFORMED JOINT SEAL. THIS WORK SHALL BE PAID FOR UNDER "PREFORMED JOINT SEAL."
3. COST FOR SEALING PARAPET AND SIDEWALK JOINTS TO BE INCLUDED FOR PAYMENT UNDER ITEM "PREFORMED JOINT SEAL."
4. THE CONTRACTOR IS RESPONSIBLE FOR MEASURING THE JOINT GAP WIDTHS IN BOTH, THE BRIDGE DECKS AND THE PARAPETS, IN ACCORDANCE TO THE "PREFORMED JOINT SEAL" SPECIFICATION. THE MEASUREMENTS SHOULD ALSO INCLUDE THE MINIMUM AND MAXIMUM BRIDGE DECK JOINT WIDTH ALONG THE JOINT TO DETERMINE THE APPROPRIATELY SIZED JOINT SEAL. THE CONTRACTOR SHALL THEN SELECT THE APPROPRIATE JOINT AND SUBMIT TO THE DESIGN ENGINEER. IN ADDITION, THE CONTRACTOR SHALL SEND A "QUALITY CONTROL PLAN" TO THE DESIGN ENGINEER FOR THE REVIEW AND COMMENT FOR THE INSTALLATION OF THE SELECTED JOINT SYSTEM. THE DESIGN ENGINEER SHALL RECEIVE THE JOINT GAP WIDTH MEASUREMENT AND THE "QUALITY CONTROL PLAN" AT LEAST 30 DAYS PRIOR TO START OF WORK.

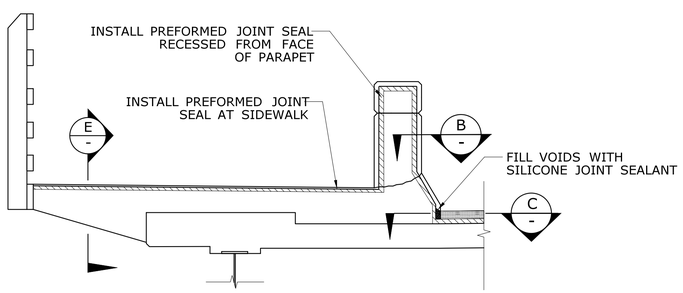

SECTION - PROPOSED SIDEWALK & NORTH PARAPET JOINT TREATMENT (PIERS 2 & 8)

NOT TO SCALE

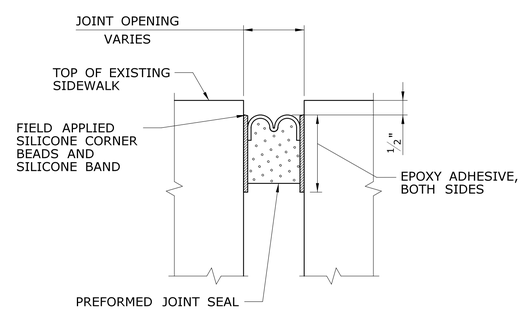

PROPOSED JOINT TREATMENT AT SIDEWALK (PIERS 2 & 8)

NOT TO SCALE

E
-

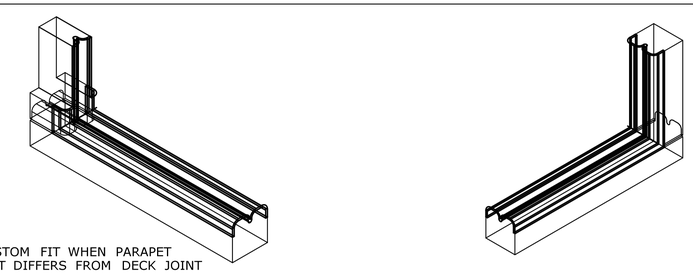

EMSEAL BEJS UNIVERSAL-90

PARAPETS AND WALLS SHALL BE SEALED FOR THE ENTIRE VERTICAL PORTION AND ACROSS THE TOP WITH THE SEALING ELEMENT - BENDS AND SPLICES 9" BELOW THE CURBLINE AND THE TRANSITION INTO THE DECK SHALL BE FACTORY FABRICATED. ROADWAY SPLICES AS WELL AS BENDS AND SPLICES 9" ABOVE THE CURBLINE AND HIGHER ARE ALLOWED TO BE FIELD FABRICATED.

REV.	DATE	REVISION DESCRIPTION	SHEET NO.

THE INFORMATION, INCLUDING ESTIMATED QUANTITIES OF WORK, SHOWN ON THESE SHEETS IS BASED ON LIMITED INVESTIGATIONS BY THE STATE AND IS IN NO WAY WARRANTED TO INDICATE THE CONDITIONS OF ACTUAL QUANTITIES OF WORK WHICH WILL BE REQUIRED.

Plotted Date: 10/29/2019

DESIGNER/DRAFTER: C. SORENSEN
CHECKED BY: R. MEARS
SCALE AS NOTED

STATE OF CONNECTICUT
DEPARTMENT OF TRANSPORTATION

Filename: ...\SB_MSH_Br03295_139_113_DECK JOINTS 2.dgn

SIGNATURE/BLOCK:
Alfred Benesch & Company
120 Hebron Avenue
2nd Floor
Glastonbury, CT

PROJECT TITLE:
REHABILITATION OF BRIDGE NO. 03295 - ROUTE 190 OVER CONNECTICUT RIVER & AMTRAK

TOWN: **SUFFIELD/ENFIELD**

DRAWING TITLE: **DECK JOINT DETAILS - 2**

PROJECT NO. **139-113**
DRAWING NO. **S-18**
SHEET NO. **4.18**

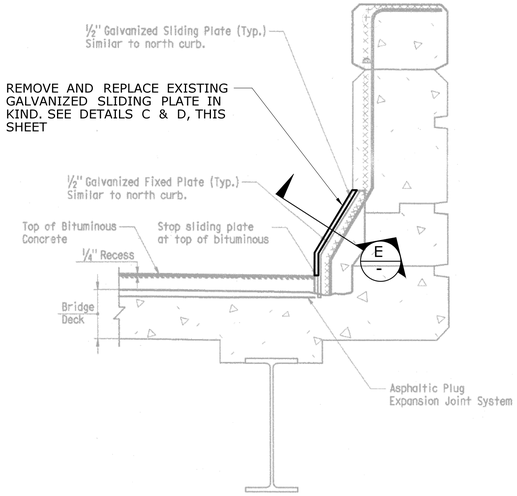

EXISTING PARAPET JOINT (PIER 7)

NOT TO SCALE

NOTE:
1. SOUTH PARAPET SHOWN, NORTH PARAPET SIMILAR
2. DETAIL FROM THE PAST STATE PROJECT NO. 139-109 REHAB CONTRACT PLANS

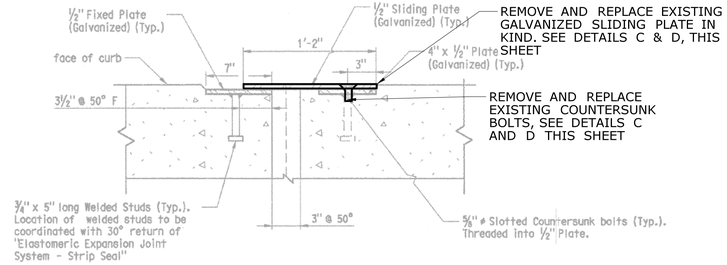

DETAIL E / -

NOT TO SCALE

NOTES:
DETAIL FROM THE PAST STATE PROJECT NO. 139-109 REHAB CONTRACT PLANS

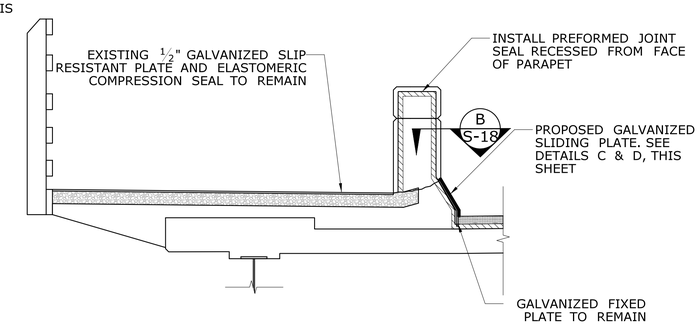

SECTION - PROPOSED SIDEWALK & NORTH PARAPET JOINT TREATMENT (PIER 7)

NOT TO SCALE

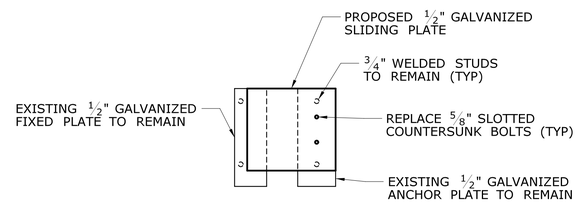

DETAIL D / -

NOT TO SCALE

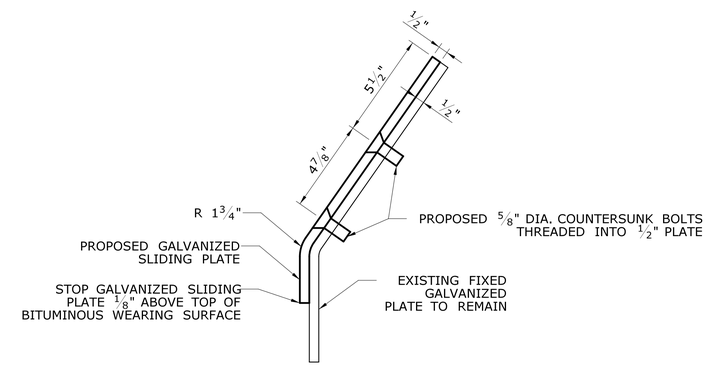

DETAIL C / -

NOT TO SCALE

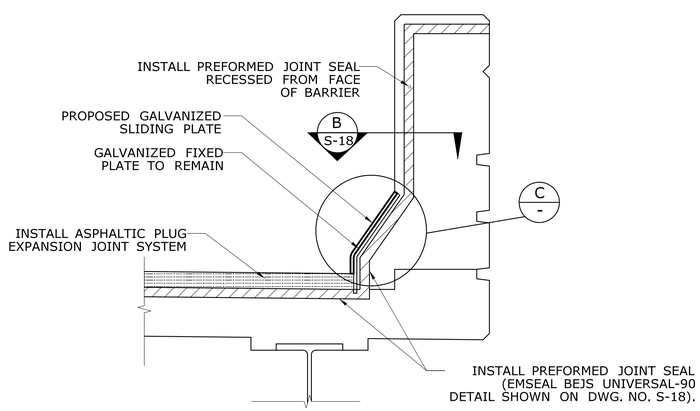

SECTION - PROPOSED SOUTH PARAPET JOINT TREATMENT (PIER 7)

NOT TO SCALE

A / -

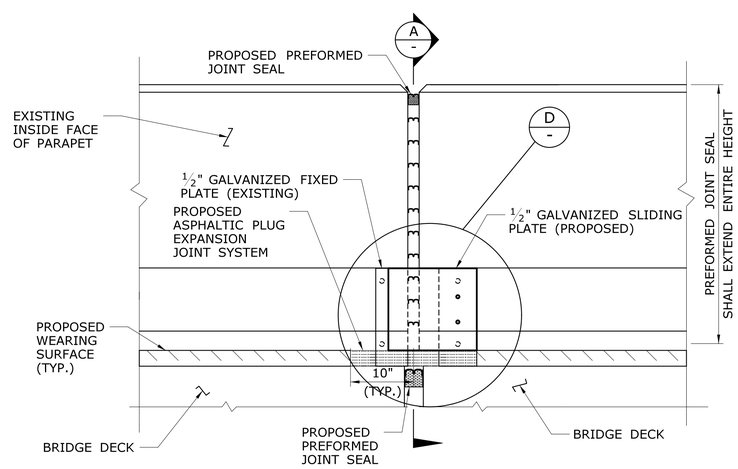

ELEVATION - PROPOSED JOINT TREATMENT AT PARAPET JOINT (PIER 7)

NOT TO SCALE

NOTES:

1. SLIDING PLATES SHALL CONFORM TO THE REQUIREMENTS OF ASTM A36 AND BE GALVANIZED IN ACCORDANCE WITH ASTM A123.
2. SLOTTED COUNTERSUNK BOLTS SHALL CONFORM TO THE REQUIREMENTS OF ASTM A307 GRADE A AND BE GALVANIZED IN ACCORDANCE WITH ASTM A153.
3. SLIDING PLATES AND SLOTTED COUNTERSUNK BOLTS SHALL BE PAID FOR UNDER THE ITEM "STRUCTURAL STEEL (SITE NO. 1)".

REV.	DATE	REVISION DESCRIPTION	SHEET NO.

THE INFORMATION, INCLUDING ESTIMATED QUANTITIES OF WORK, SHOWN ON THESE SHEETS IS BASED ON LIMITED INVESTIGATIONS BY THE STATE AND IS IN NO WAY WARRANTED TO INDICATE THE CONDITIONS OF ACTUAL QUANTITIES OF WORK WHICH WILL BE REQUIRED.

Plotted Date: 11/26/2019

DESIGNER/DRAFTER: C. SORENSEN
CHECKED BY: R. MEARS
SCALE AS NOTED

STATE OF CONNECTICUT
DEPARTMENT OF TRANSPORTATION

Filename: ...\SB_MSH_Br03295_139_113_DECK JOINTS 3.dgn

SIGNATURE/BLOCK:
STATE OF CONNECTICUT LICENSED PROFESSIONAL ENGINEER NO. 23461
Alfred Benesch & Company
120 Hebron Avenue
2nd Floor
Glastonbury, CT

PROJECT TITLE:
REHABILITATION OF BRIDGE NO. 03295 - ROUTE 190 OVER CONNECTICUT RIVER & AMTRAK

TOWN: **SUFFIELD/ENFIELD**

DRAWING TITLE: **DECK JOINT DETAILS - 3**

PROJECT NO. **139-113**
DRAWING NO. **S-19**
SHEET NO. **4.19**

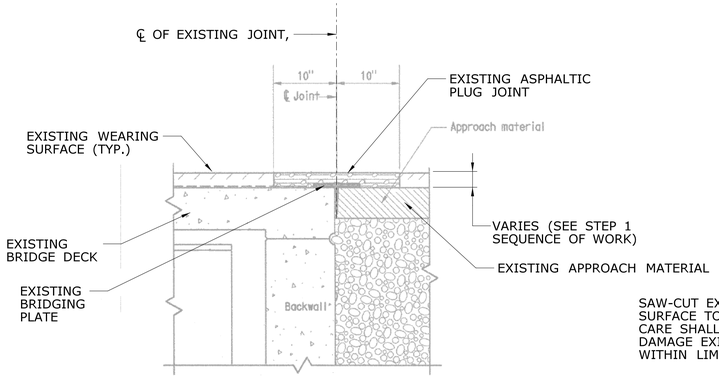

NOTES:
1. ALL DIMENSIONS THAT REFER TO EXISTING CONSTRUCTION SHALL BE VERIFIED BY THE CONTRACTOR.
2. DETAIL FROM THE PAST STATE PROJECT NO. 139-109 REHAB CONTRACT PLANS.
3. EAST ABUTMENT SHOWN, WEST ABUTMENT SIMILAR (TYPICAL THIS SHEET)

EXISTING CONDITION @ ABUTMENTS

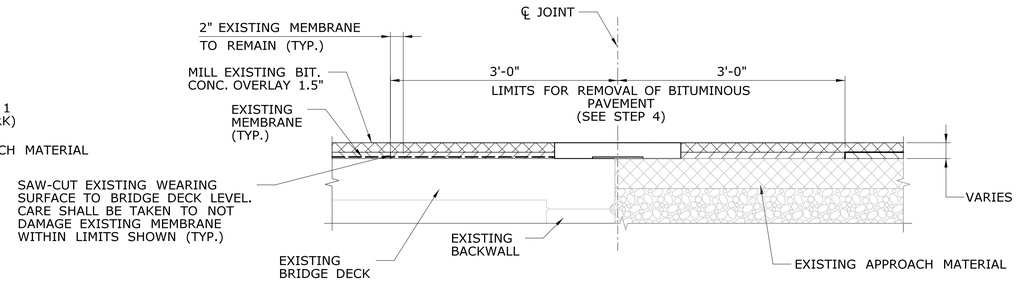

INTERMEDIATE CONDITION
JOINT AND PAVEMENT REMOVAL (STEPS 1-4)

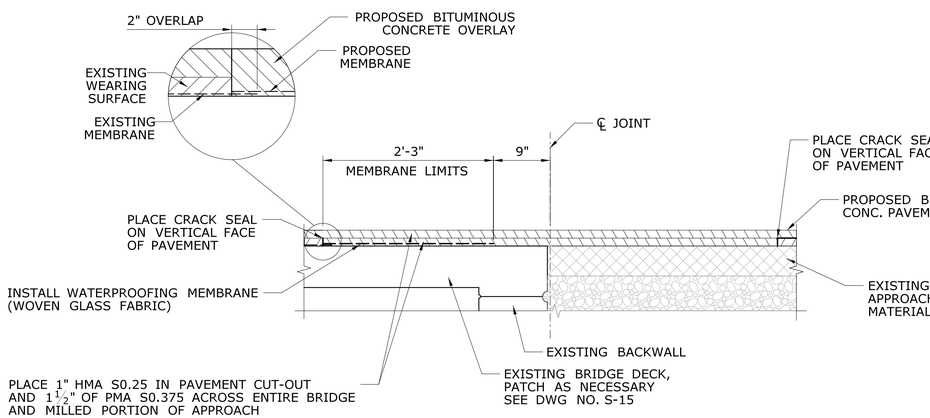

INTERMEDIATE CONDITION
PLACEMENT OF PAVEMENT IN JOINT CUTOUT (STEPS 5-10)

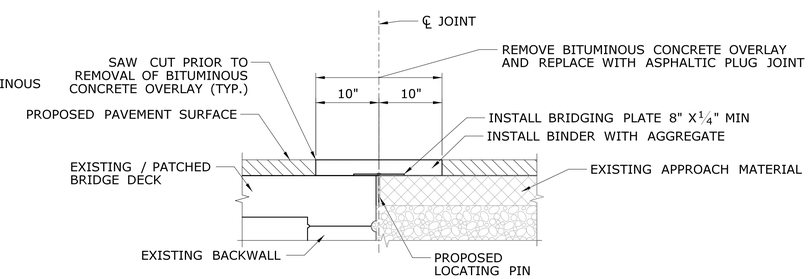

FINAL CONDITION
(STEPS 11-12)

JOINT REPLACEMENT SEQUENCE

SCALE: 1" = 1'-0"

SEQUENCE OF WORK

STEP 1: CONTRACTOR SHALL PERFORM AN EXPLORATION AT THE GUTTERLINE TO DETERMINE THE DEPTH OF PAVEMENT AND THE LOCATION OF THE DECK END (CENTERLINE OF PROPOSED JOINT) BEFORE PROCEEDING TO STEP 2.

STEP 2: THE CONTRACTOR IS RESPONSIBLE FOR FILLING OUT THE PREFORMED JOINT SEAL CHECKLIST FOR EACH JOINT LOCATION. THE CHECKLIST SHALL BE FORWARDED TO PREFORMED JOINT SEAL MANUFACTURER AND BRIDGE DESIGN FOR REVIEW.

STEP 3: MILL 1.5" OF EXISTING BITUMINOUS OVERLAY WITHIN BRIDGE LIMITS DETERMINED BY THE NUMBER OF JOINTS WHICH CAN BE REPLACED WITHIN A 14-DAY PERIOD.

STEP 4: SAW-CUT BITUMINOUS PAVEMENT ON BOTH SIDES OF EXISTING JOINT FOR PAVEMENT CUT-OUT. EACH SAW-CUT LINE SHALL BE 3' FROM THE CENTERLINE OF THE EXISTING JOINT. SAW-CUT SHALL NOT DAMAGE EXISTING DECK AND MEMBRANE WATERPROOFING.

STEP 5: REMOVE EXISTING PAVEMENT MATERIAL, MEMBRANE (IF PRESENT) AND BRIDGING PLATE WITHIN THE LIMITS SHOWN.

STEP 6: REPAIR DETERIORATED TOP SURFACE OF CONCRETE DECK AS REQUIRED.

STEP 7 (OPTIONAL):
INSTALL TEMPORARY PAVEMENT WITH BOND BREAKER IF REMAINING WORK CANNOT BE COMPLETED BEFORE OPENING HIGHWAY TO TRAFFIC. TEMPORARY PAVEMENT SHALL BE REMOVED PRIOR TO PROCEEDING TO STEP 7.

STEP 8: INSTALL MEMBRANE TO THE TOP OF DECK WITHIN THE LIMITS SHOWN.

STEP 9: PLACE CRACK SEALANT ON VERTICAL EDGE OF PAVEMENT ALONG SAW-CUT LINES.

STEP 10: PLACE 1" HMA S0.25 TRAFFIC LEVEL 2 IN THE JOINT CUTOUT.

STEP 11: PLACE PMA S0.375 OVER THE MILLED PORTION OF THE BRIDGE AND APPROACH.

STEP 12: CUT PAVEMENT FULL DEPTH, 10" EACH SIDE OF CENTER OF JOINT, AND REMOVE ALL PAVEMENT MATERIAL BETWEEN SAW-CUTS.

STEP 13: INSTALL PROPOSED ASPHALTIC PLUG EXPANSION JOINT SYSTEM WITH BRIDGING PLATE.

(REPEAT SEQUENCE UNTIL ALL ASPHALTIC PLUG DECK JOINTS AT ABUTMENTS ARE REPLACED)

ASPHALTIC PLUG EXPANSION JOINT NOTES:

1. REMOVAL OF BITUMINOUS CONCRETE OVERLAY AND REPLACEMENT WITH ASPHALTIC PLUG EXPANSION JOINT SYSTEM TO BE PAID FOR UNDER THE ITEM "ASPHALTIC PLUG EXPANSION JOINT SYSTEM". (SEE SPECIAL PROVISION)

2. REPAIR CONCRETE BRIDGE DECK AS NEEDED TO BE PAID FOR UNDER "FULL DEPTH PATCH (HIGH EARLY STRENGTH CONCRETE)" OR "PARTIAL DEPTH PATCH".

3. SAW-CUTS MADE 3' EACH SIDE OF CENTERLINE OF JOINT WILL BE PAID AS "CUT BITUMINOUS CONCRETE PAVEMENT".

4. SAW-CUTS MADE 10" EACH SIDE OF CENTERLINE OF JOINT WILL BE INCLUDED IN THE COST OF "ASPHALTIC PLUG EXPANSION JOINT SYSTEM".

5. THE REMOVAL OF ALL EXISTING JOINT SYSTEMS AND BITUMINOUS CONCRETE WITHIN THE LIMITS SHOWN TO BE INCLUDED FOR PAYMENT UNDER THE ITEM, "REMOVAL OF EXISTING WEARING SURFACE".

6. INSTALLATION OF MEMBRANE WITHIN THE LIMITS SHOWN TO BE PAID UNDER THE ITEM, "MEMBRANE WATERPROOFING (WOVEN GLASS FABRIC)".

7. CRACK SEALANT PLACED ALONG VERTICAL FACES OF THE SAW-CUT PAVEMENT TO BE PAID UNDER THE ITEM, "JOINT AND CRACK SEALING OF BITUMINOUS CONCRETE PAVEMENT".

8. THE FURNISHING AND PLACING OF HMA S0.25 AND PMA S0.375 TO BE INCLUDED FOR PAYMENT UNDER THE ITEMS "HMA S0.25" AND "PMA S0.375" RESPECTIVELY.

ASPHALTIC PLUG EXPANSION JOINT SYSTEM AT ABUTMENTS

REV.	DATE	REVISION DESCRIPTION	SHEET NO.

THE INFORMATION, INCLUDING ESTIMATED QUANTITIES OF WORK, SHOWN ON THESE SHEETS IS BASED ON LIMITED INVESTIGATIONS BY THE STATE AND IS IN NO WAY WARRANTED TO INDICATE THE CONDITIONS OF ACTUAL QUANTITIES OF WORK WHICH WILL BE REQUIRED.

Plotted Date: 10/29/2019

DESIGNER/DRAFTER: C. SORENSEN
CHECKED BY: R. MEARS
SCALE AS NOTED

STATE OF CONNECTICUT
DEPARTMENT OF TRANSPORTATION

Filename: ...\SB_MSH_Br03295_139_113_DECK JOINTS 4.dgn

SIGNATURE/BLOCK:
Alfred Benesch & Company
120 Hebron Avenue
2nd Floor
Glastonbury, CT

PROJECT TITLE:
REHABILITATION OF BRIDGE NO. 03295 - ROUTE 190 OVER CONNECTICUT RIVER & AMTRAK

TOWN: SUFFIELD/ENFIELD

DRAWING TITLE: DECK JOINT DETAILS - 4

PROJECT NO. 139-113
DRAWING NO. S-20
SHEET NO. 4.20

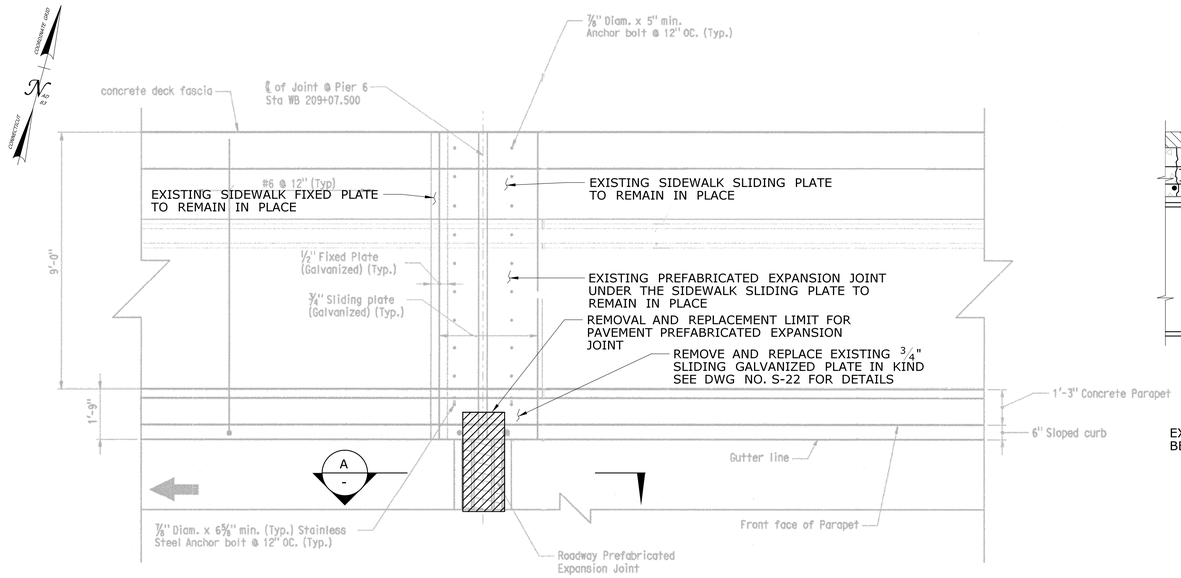

NOTE: DETAIL FROM THE PAST STATE PROJECT NO. 139-109 REHAB CONTRACT PLANS

PARTIAL PLAN - PIER 6

SCALE: 3/8" = 1'-0"

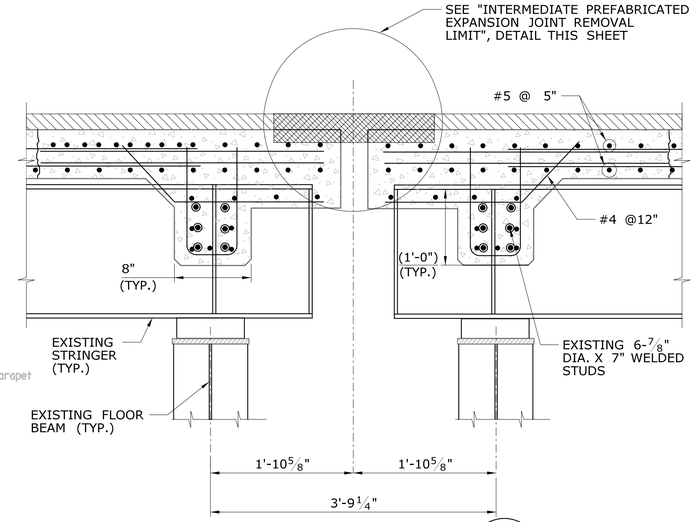

EXISTING CONDITION

SCALE: 1" = 1'-0"

SEQUENCE OF WORK

NOTE: THE PREFORMED JOINT SEAL SHOWN ON THE DECK JOINT DETAIL DRAWINGS IS BASED ON THE WABO FS BRIDGE SEAL SYSTEM. CONTRACTOR MAY SUBMIT A DIFFERENT PREFORMED JOINT SEAL (APPROVED EQUAL) TO THE ENGINEER FOR APPROVAL. SEE SPECIAL PROVISIONS.

STEP 1: SAW-CUT BITUMINOUS PAVEMENT ON BOTH SIDES OF EXISTING JOINT FOR PAVEMENT CUT-OUT. EACH SAW-CUT LINE SHALL BE 2' FROM THE OUTSIDE EDGE OF THE EXISTING CONCRETE HEADER. SAW-CUT SHALL NOT DAMAGE EXISTING DECK AND MEMBRANE WATERPROOFING.

STEP 2: REMOVE EXISTING PAVEMENT MATERIAL, MEMBRANE (IF PRESENT), TOP 2.5" (FLUSH WITH EXISTING CONCRETE DECK) OF EXISTING CONCRETE HEADERS AND EXISTING PREFABRICATED EXPANSION JOINT. EXISTING ANCHOR PLATES WITH STUDS AND BOLTS ARE TO REMAIN. CONTRACTOR SHALL ALSO MEASURE THE DECK JOINT AND PARAPET GAP OPENING FOR SIZING OF PREFORMED JOINT SEAL. PREFORMED JOINT SEAL IS MADE TO ORDER. THE MANUFACTURER REQUIRES A MINIMUM OF THREE WEEKS LEAD TIME TO FABRICATE THE BRIDGE SEALS. THE CONTRACTOR IS RESPONSIBLE FOR FILLING OUT THE PREFORMED JOINT SEAL CHECKLIST FOR EACH JOINT LOCATION. THE CHECKLIST SHALL BE FORWARDED TO PREFORMED JOINT SEAL MANUFACTURER AND BRIDGE DESIGN FOR REVIEW.

STEP 3: REPAIR DETERIORATED TOP SURFACE OF CONCRETE DECK AS REQUIRED.

STEP 4: INSTALL PROPOSED PREFORMED JOINT SEAL AND PREFABRICATED EXPANSION JOINT.

STEP 5: INSTALL MEMBRANE TO THE TOP OF DECK WITHIN THE LIMITS SHOWN.

STEP 6: PLACE CRACK SEALANT ON VERTICAL EDGE OF PAVEMENT ALONG SAW-CUT LINES.

STEP 7: PLACE 1" HMA S0.25 TRAFFIC LEVEL 2 IN THE JOINT CUTOUT. CARE SHALL BE TAKEN TO NOT DAMAGE THE NEW PREFABRICATED EXPANSION JOINT. IF NECESSARY TO MINIMIZE POTENTIAL DAMAGE FROM PAVING OPERATIONS (INCLUDING HEAT) THE CONTRACTOR MAY UTILIZE A TEMPORARY FORM, BLOCKOUT OR BONDBREAKER TO PROTECT THE INTERFACE WITH THE NEW DECK JOINT.

STEP 8: PLACE PMA S0.375 OVER THE MILLED PORTION OF THE BRIDGE.

STEP 9: CUT PAVEMENT FULL DEPTH, 1'-0" EACH SIDE FROM EDGE OF PREFABRICATED EXPANSION JOINT, AND REMOVE ALL PAVEMENT MATERIAL AND OPTIONAL FORMS BETWEEN SAW-CUTS.

STEP 10: INSTALL PROPOSED ELASTOMERIC CONCRETE HEADERS.

STEP 11: INSTALL PROPOSED ELASTOMERIC TROUGH. REFER TO DWG. NO S-23 FOR ELASTOMERIC TROUGH DETAIL.

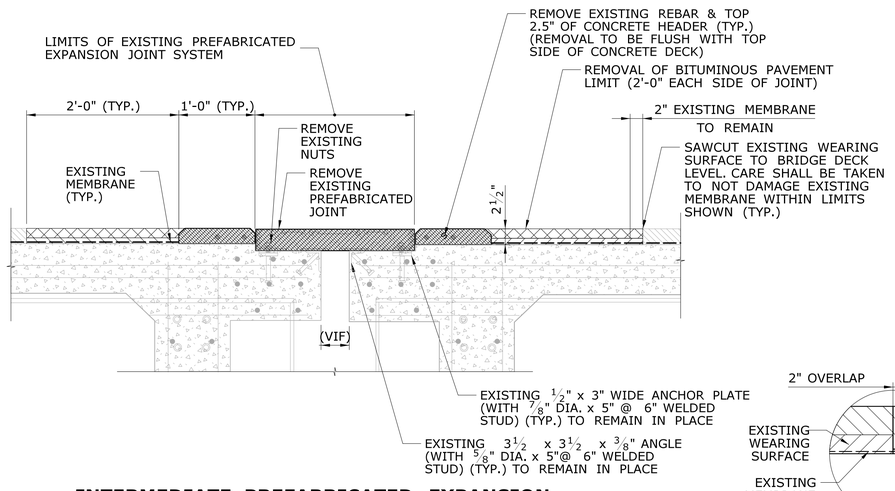

INTERMEDIATE PREFABRICATED EXPANSION JOINT REMOVAL LIMIT (STEPS 1-3)

SCALE: 1" = 1'-0"

NOTE: VIF (VERIFY IN FIELD)

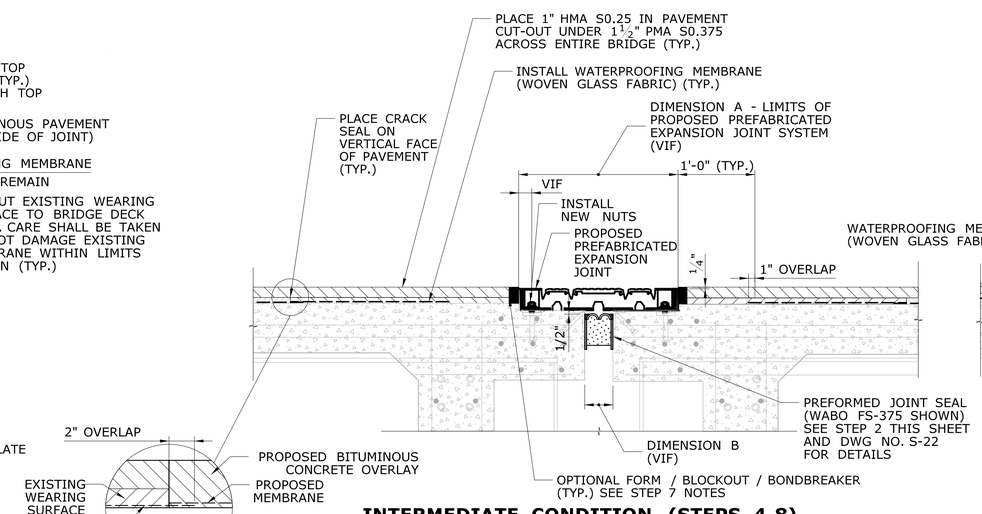

INTERMEDIATE CONDITION (STEPS 4-8)

SCALE: 1 " = 1'-0"

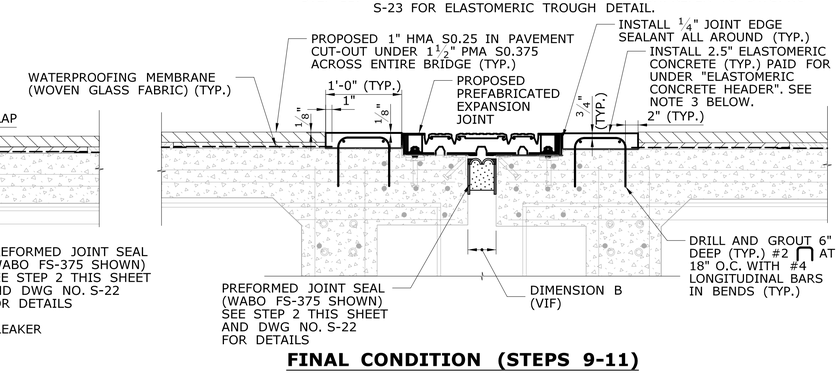

FINAL CONDITION (STEPS 9-11)

SCALE: 1 " = 1'-0"

PIER 6 JOINT REPLACEMENT SEQUENCE

NOTES:
1. VIF (VERIFY IN FIELD)
2. ALL REINFORCING BARS SHOWN IN THIS DETAIL SHALL BE GLASS FIBER-REINFORCED POLYMER. PAID FOR UNDER "ELASTOMERIC CONCRETE HEADER".
3. REFER TO DWG. NO S-23 FOR ELASTOMERIC TROUGH DETAIL.

ANTICIPATED JOINT DIMENSIONS AT VARIOUS TEMPERATURES

PIER NO.	LENGTH CONTRIBUTING TO THERMAL MOVEMENT (FT.)	AMBIENT TEMPERATURE (° F)	110	100	90	80	70	60	50	40	30	20	10	0	-10	TOTAL JOINT MOVEMENT (IN.)
		TEMPERATURE CHANGE FROM MEAN TEMPERATURE (50° F)	60	50	40	30	20	10	0	-10	-20	-30	-40	-50	-60	
6	497.61	JOINT MOVEMENT (IN.)	-2.29	-1.91	-1.53	-1.15	-0.76	-0.38	0.00	0.38	0.76	1.15	1.53	1.91	2.29	4.59
		DIMENSION A (IN.)	25.27	25.65	26.03	26.42	26.80	27.18	27.56	27.94	28.33	28.71	29.09	29.47	29.86	
		DIMENSION B (IN.)	1.52	1.90	2.28	2.67	3.05	3.43	3.81	4.19	4.58	4.96	5.34	5.72	6.11	

NOTE: THE CONTRACTOR SHALL FIELD VERIFY EXISTING JOINT DIMENSIONS PRIOR TO FABRICATION OF ANY JOINT SEGMENTS.

REV.	DATE	REVISION DESCRIPTION	SHEET NO.

THE INFORMATION, INCLUDING ESTIMATED QUANTITIES OF WORK, SHOWN ON THESE SHEETS IS BASED ON LIMITED INVESTIGATIONS BY THE STATE AND IS IN NO WAY WARRANTED TO INDICATE THE CONDITIONS OF ACTUAL QUANTITIES OF WORK WHICH WILL BE REQUIRED.

Plotted Date: 11/20/2019

DESIGNER/DRAFTER: S. DAS
CHECKED BY: R. MEARS
SCALE AS NOTED

STATE OF CONNECTICUT
DEPARTMENT OF TRANSPORTATION

Filename: ...\SB_MSH_Br03295_139_113_DECK JOINTS 5.dgn

SIGNATURE/BLOCK:
STATE OF CONNECTICUT
STEVEN L. DECKER
NO. 23441
LICENSED
PROFESSIONAL ENGINEER
Alfred Benesch & Company
120 Hebron Avenue
2nd Floor
Glastonbury, CT

PROJECT TITLE:
REHABILITATION OF BRIDGE NO. 03295 - ROUTE 190 OVER CONNECTICUT RIVER & AMTRAK

TOWN: SUFFIELD/ENFIELD

DRAWING TITLE: DECK JOINT DETAILS - 5

PROJECT NO. 139-113
DRAWING NO. S-21
SHEET NO. 4.21

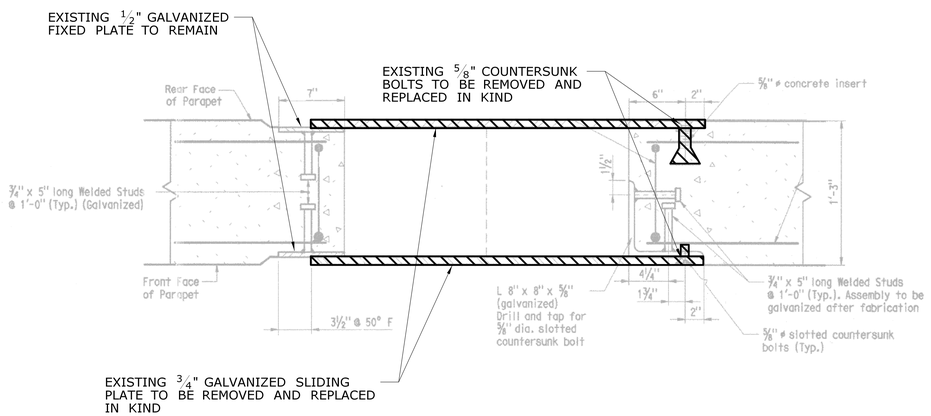

NORTH PARAPET AT PIER 6 JOINT PLAN VIEW

SCALE: 1 1/2" = 1'-0"

B
-

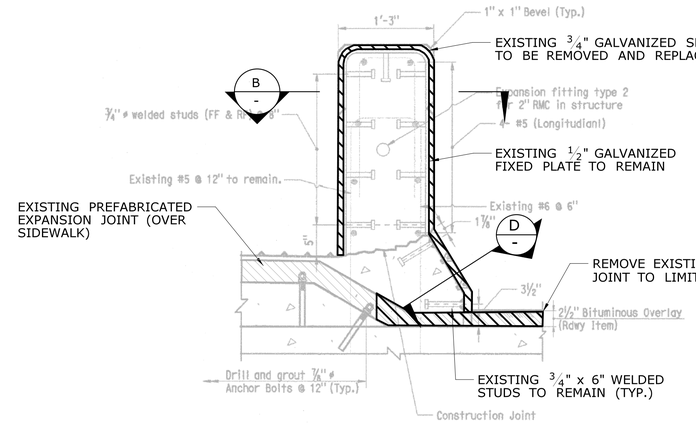

NORTH PARAPET AT PIER 6 JOINT (EXISTING)

SCALE: 1" = 1'-0"

A
-

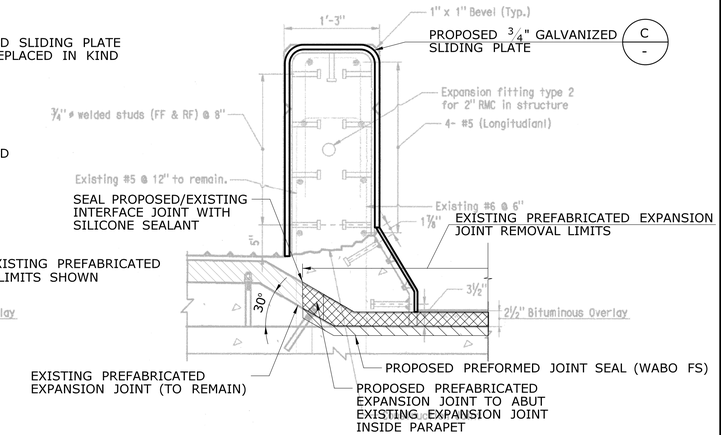

NORTH PARAPET AT PIER 6 JOINT (PROPOSED)

SCALE: 1" = 1'-0"

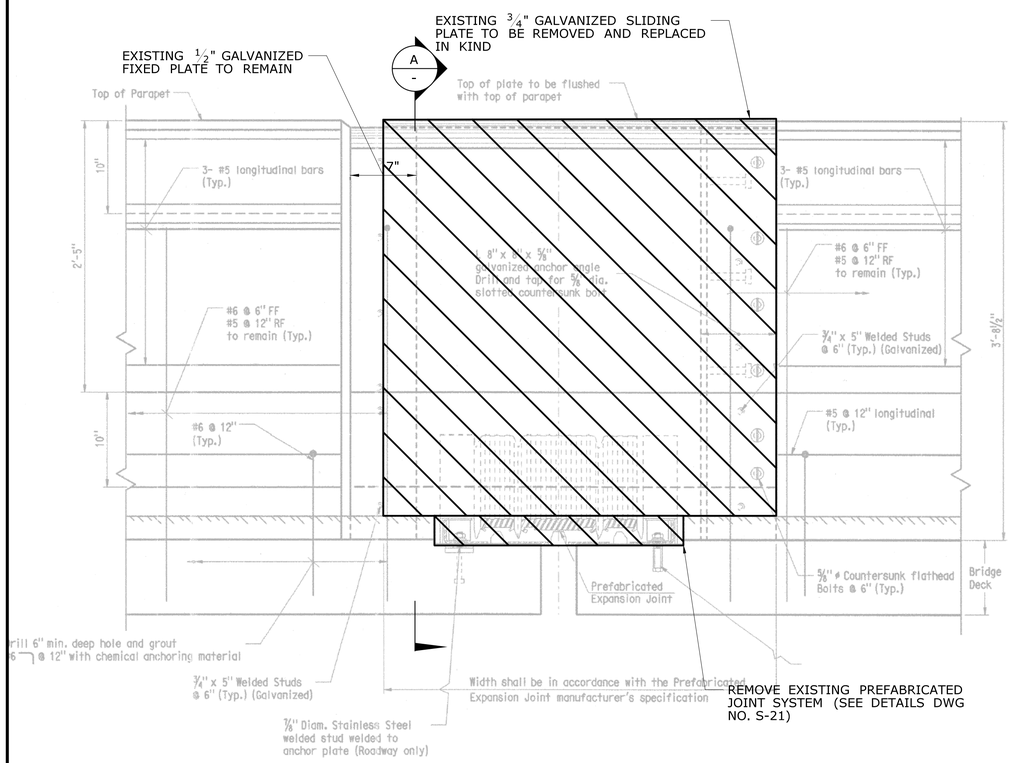

NORTH PARAPET AT PIER 6 JOINT (EXISTING) ELEVATION VIEW

SCALE: 1 1/2" = 1'-0"

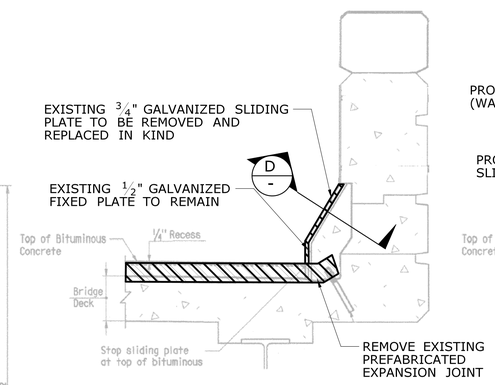

SOUTH PARAPET AT PIER 6 JOINT (EXISTING)

SCALE: 1" = 1'-0"

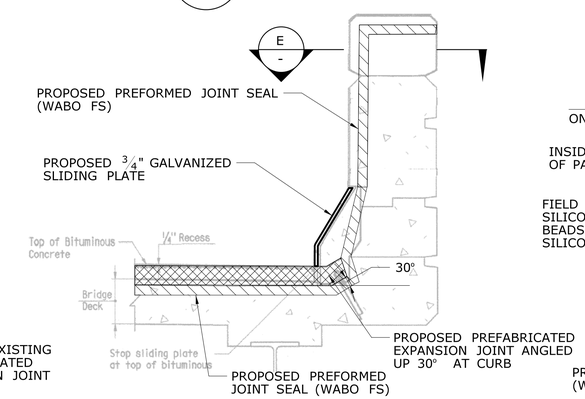

SOUTH PARAPET AT PIER 6 JOINT (PROPOSED)

SCALE: 1" = 1'-0"

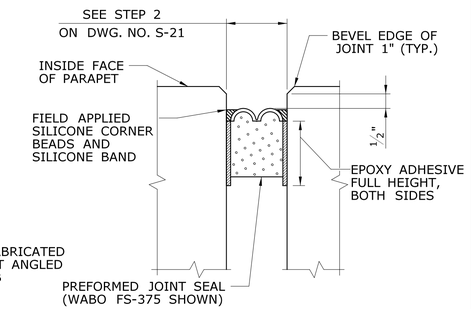

PROPOSED JOINT TREATMENT AT PIER 6 SOUTH PARAPET

NOT TO SCALE

E
-

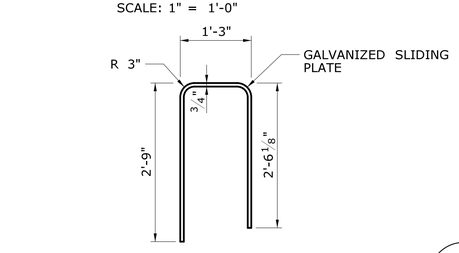

NORTH PARAPET SLIDING PLATE DETAIL

SCALE: 3/4" = 1'-0"

C
-

NOTE:
1. SLIDING PLATES SHALL CONFORM TO THE REQUIREMENTS OF ASTM A36 AND BE GALVANIZED IN ACCORDANCE WITH ASTM A123.
2. SLOTTED COUNTERSUNK BOLTS SHALL CONFORM TO THE REQUIREMENTS OF ASTM A307 GRADE A AND BE GALVANIZED IN ACCORDANCE WITH ASTM A153.
3. SLIDING PLATES AND SLOTTED COUNTERSUNK BOLTS SHALL BE PAID FOR UNDER THE ITEM "STRUCTURAL STEEL (SITE NO. 1)".
4. CONTRACTOR TO FIELD VERIFY DIMENSIONS PRIOR TO FABRICATION.
5. SHOULD CONDITION OF PARAPET BELOW SLIDING PLATES REQUIRE RECONSTRUCTION, PAID FOR UNDER "PARAPET CONCRETE" (UNASSIGNED QUANTITY).

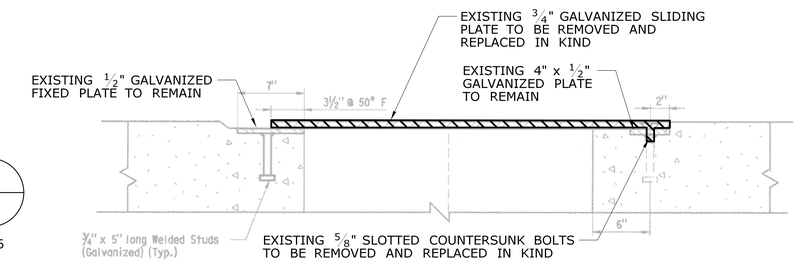

CURB DETAIL AT PIER 6 JOINT PLAN VIEW

SCALE: 1 1/2" = 1'-0"

D
-

REV.	DATE	REVISION DESCRIPTION	SHEET NO.

THE INFORMATION, INCLUDING ESTIMATED QUANTITIES OF WORK, SHOWN ON THESE SHEETS IS BASED ON LIMITED INVESTIGATIONS BY THE STATE AND IS IN NO WAY WARRANTED TO INDICATE THE CONDITIONS OF ACTUAL QUANTITIES OF WORK WHICH WILL BE REQUIRED.

Plotted Date: 10/29/2019

DESIGNER/DRAFTER: S. DAS
CHECKED BY: R. MEARS
SCALE AS NOTED

STATE OF CONNECTICUT
DEPARTMENT OF TRANSPORTATION

Filename: ...\SB_MSH_Br03295_139_113_DECK JOINTS 6.dgn

SIGNATURE/BLOCK:
STEVEN J. DRESCHER, JR. — STATE OF CONNECTICUT — No. 23641 — LICENSED PROFESSIONAL ENGINEER
Alfred Benesch & Company
120 Hebron Avenue
2nd Floor
Glastonbury, CT

PROJECT TITLE:
REHABILITATION OF BRIDGE NO. 03295 - ROUTE 190 OVER CONNECTICUT RIVER & AMTRAK

TOWN: **SUFFIELD/ENFIELD**

DRAWING TITLE: **DECK JOINT DETAILS - 6**

PROJECT NO. **139-113**
DRAWING NO. **S-22**
SHEET NO. **4.22**

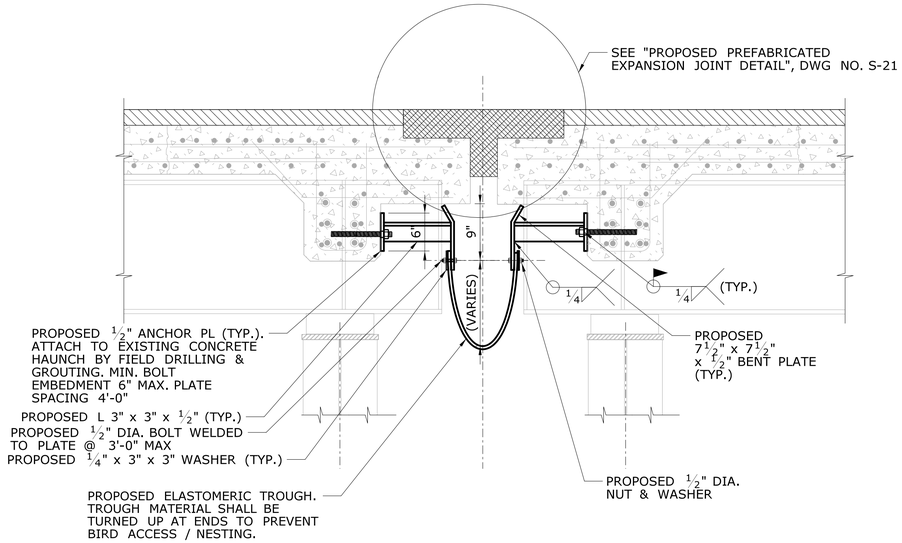

ELASTOMERIC TROUGH DETAIL - PIER 6

SCALE: 1" = 1'-0"

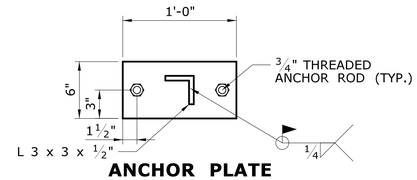

ANCHOR PLATE

SCALE: 1 1/2" = 1'-0"

NOTES:
1. ALL STRUCTURAL STEEL IN THE JOINT ASSEMBLY AND THE ELASTOMERIC TROUGH SHALL BE HOT-DIP GALVANIZED AND CONFORM TO THE ASTM STANDARDS CALLED FOR IN THE SPECIAL PROVISION "PREFABRICATED EXPANSION JOINT SYSTEM."
2. ALL MATERIALS INCLUDING, ANGLES, THE STEEL CLOSURE PLATES, BOLTS, WITH HARDWARE DRILLING AND GROUTING THREADED REBAR, AND REMOVAL OF EXISTING HEADER CONCRETE SHALL BE PAID FOR UNDER THE ITEM "PREFABRICATED EXPANSION JOINT SYSTEM".
3. CONTRACTOR SHALL PROVIDE FIELD DIMENSIONS OF THE PROPOSED ANCHOR LOCATIONS TO THE FABRICATOR PRIOR TO FABRICATION OF ANY JOINT SEGMENTS.
4. ELASTOMERIC TROUGH LONGITUDINAL SLOPE SHALL MATCH THE DECK CROSS SLOPE.

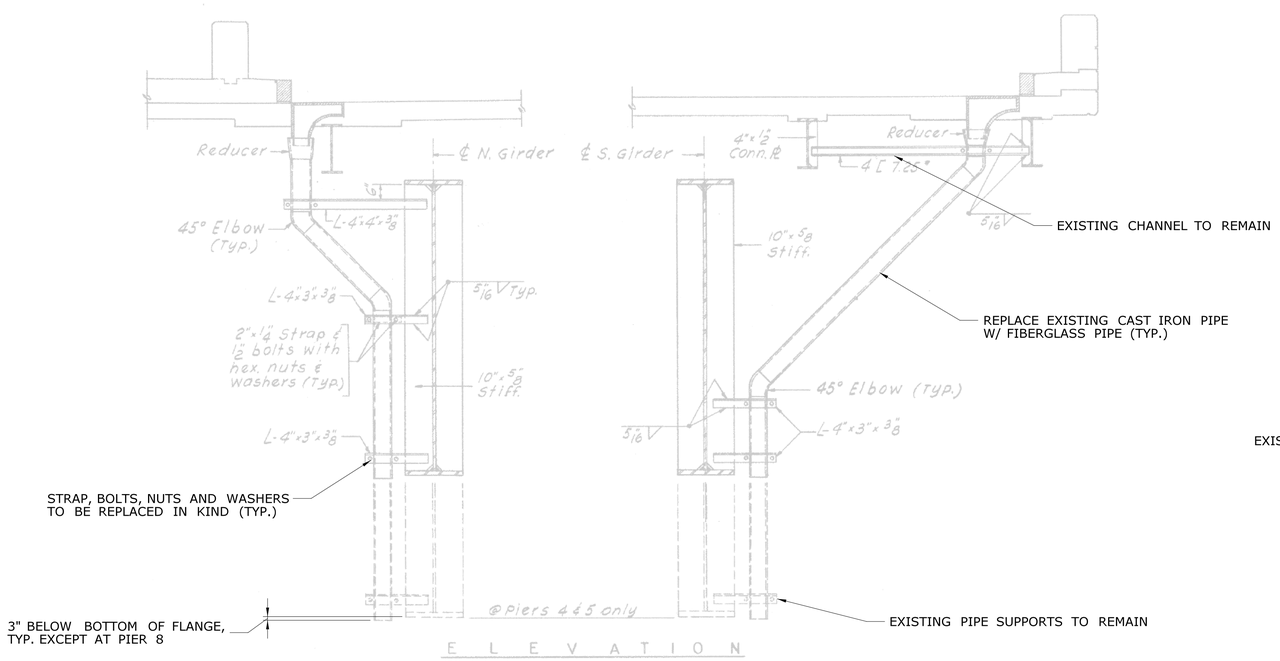

TYPICAL SCUPPER DOWNSPOUT REPLACEMENT DETAIL

SCALE: 3/8"=1'-0"

NOTE:
1. DETAIL FROM THE PAST STATE PROJECT NO. 139-64 CONTRACT PLANS.
2. ALL WORK AND MATERIALS ASSOCIATED WITH SCUPPER DOWNSPOUT REPLACEMENT PAID FOR UNDER "REMOVAL AND REPLACEMENT OF EXISTING BRIDGE DRAINAGE SYSTEM".

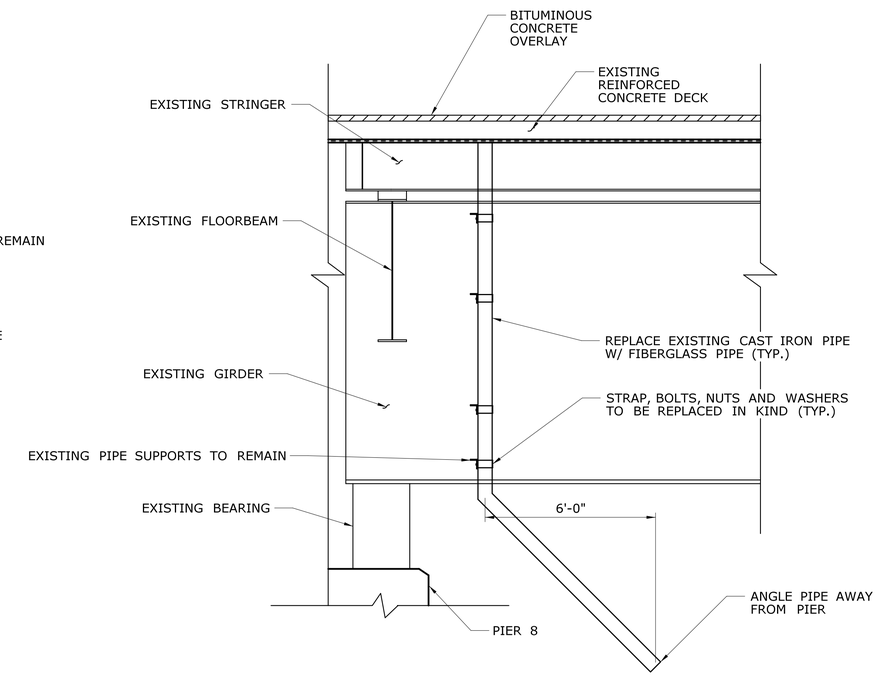

SCUPPER DOWNSPOUT REPLACEMENT DETAIL AT PIER 8 (SPAN H)

SCALE: 3/8"=1'-0"

REV.	DATE	REVISION DESCRIPTION	SHEET NO.

THE INFORMATION, INCLUDING ESTIMATED QUANTITIES OF WORK, SHOWN ON THESE SHEETS IS BASED ON LIMITED INVESTIGATIONS BY THE STATE AND IS IN NO WAY WARRANTED TO INDICATE THE CONDITIONS OF ACTUAL QUANTITIES OF WORK WHICH WILL BE REQUIRED.

Plotted Date: 10/29/2019

DESIGNER/DRAFTER: C. SORENSEN
CHECKED BY: R. MEARS
SCALE AS NOTED

STATE OF CONNECTICUT
DEPARTMENT OF TRANSPORTATION

Filename: ...\SB_MSH_Br03295_139_113_DRAINAGE DETAILS.dgn

SIGNATURE/BLOCK:
STATE OF CONNECTICUT LICENSED PROFESSIONAL ENGINEER No. 23441 Alfred J. Benesch Jr. 12/20/2019
Alfred Benesch & Company
120 Hebron Avenue
2nd Floor
Glastonbury, CT

PROJECT TITLE:
REHABILITATION OF BRIDGE NO. 03295 - ROUTE 190 OVER CONNECTICUT RIVER & AMTRAK

TOWN: SUFFIELD/ENFIELD

DRAWING TITLE: DRAINAGE DETAILS

PROJECT NO. 139-113
DRAWING NO. S-23
SHEET NO. 4.23