04 - STRUCTURE
INDEX OF DRAWINGS

DRAWING NUMBER	DRAWING TITLE	DRAWING NUMBER	DRAWING TITLE	DRAWING NUMBER	DRAWING TITLE
STR-01	INDEX OF DRAWINGS				
STR-02	GENERAL PLAN AND ELEVATION				
STR-03	LAYOUT PLAN				
STR-04	BORING LOGS NO. 1				
STR-05	BORING LOGS NO. 2				
STR-06	STAGING/ WATER HANDLING PLAN -1				
STR-07	STAGING/ WATER HANDLING PLAN -2				
STR-08	STAGE CONSTRUCTION SECTIONS				
STR-09	CULVERT DETAILS				
STR-10	PARAPET AND CURB DETAILS				
STR-11	INLET AND OUTLET PLANS AND ELEVATIONS				
STR-12	WINGWALL ELEVATIONS				
STR-13	WINGWALL AND BARRIER WALL DETAILS -1				
STR-14	WINGWALL AND BARRIER WALL DETAILS -2				

DESIGNED BY:
GM2 ASSOCIATES, INC.
115 GLASTONBURY BLVD.
GLASTONBURY, CT 06033

STATE OF CONNECTICUT
JAGDEESH GOPAL
LICENSED
PROFESSIONAL ENGINEER

Jagdeesh Gopal
2019.07.16
18:24:27-04'00'

REV.	DATE	REVISION DESCRIPTION	SHEET NO.
-	-	-	-
-	-	-	-
-	-	-	-
-	-	-	-
-	-	-	-
-	-	-	-

THE INFORMATION, INCLUDING ESTIMATED QUANTITIES OF WORK, SHOWN ON THESE SHEETS IS BASED ON LIMITED INVESTIGATIONS BY THE STATE AND IS IN NO WAY WARRANTED TO INDICATE THE CONDITIONS OF ACTUAL QUANTITIES OF WORK WHICH WILL BE REQUIRED.

Plotted Date: 7/16/2019

DESIGNER/DRAFTER: **PS**
CHECKED BY: **JG**
SCALE AS NOTED

STATE OF CONNECTICUT
DEPARTMENT OF TRANSPORTATION

Filename: ...\SB_MSH_41_118_INDEX.dgn

SIGNATURE/ BLOCK:
STATE OF CONNECTICUT
JAGDEESH GOPAL
LICENSED
PROFESSIONAL ENGINEER
GM2 ASSOCIATES, INC.
115 GLASTONBURY BLVD.
GLASTONBURY, CT 06033

PROJECT TITLE:
REPLACEMENT OF BRIDGE NO. 02018 ROUTE 66 OVER POCOTOPAUG CREEK

TOWN: **EAST HAMPTON**

DRAWING TITLE: **INDEX OF DRAWINGS**

PROJECT NO. **041-118**
DRAWING NO. **STR-01**
SHEET NO. **04.01**

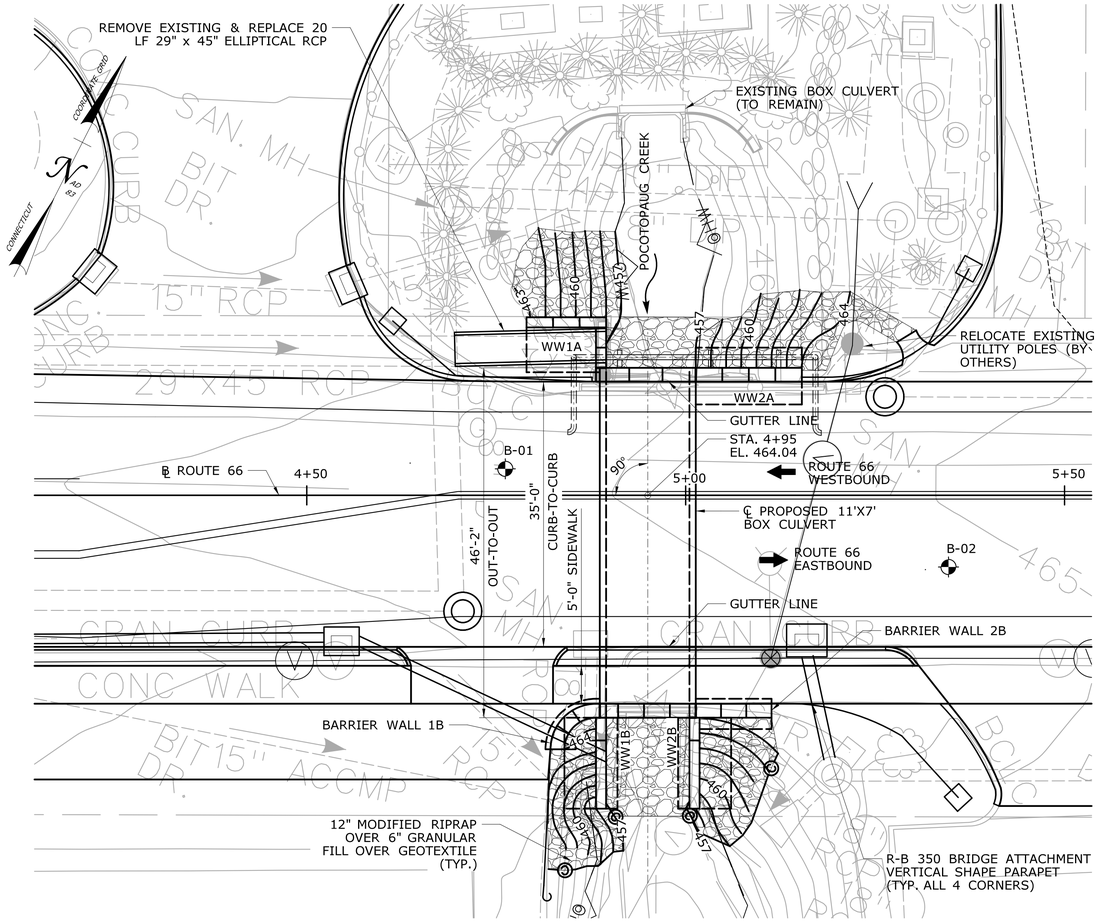

GENERAL PLAN

SCALE: 1" = 10'-0"

BRIDGE QUANTITIES

ITEM	UNIT	TOTAL
STRUCTURAL EXCAVATION - EARTH (EXCLUDING COFFERDAM AND DEWATERING)	C.Y.	355
STRUCTURAL EXCAVATION - ROCK (EXCLUDING COFFERDAM AND DEWATERING)	C.Y.	60
COFFERDAM AND DEWATERING	L.F.	225
HANDLING WATER	L.S.	1
GRANULAR FILL	C.Y.	20
PERVIOUS STRUCTURE BACKFILL	C.Y.	426
HMA S0.5	TON	6
HMA S0.25	TON	5
REMOVAL OF SUPERSTRUCTURE	L.S.	1
11'x7' PRECAST CONCRETE BOX CULVERT	L.F.	47
PRECAST CONCRETE WALLS	L.S.	1
BRIDGE SIDEWALK CONCRETE	C.Y.	3
DEFORMED STEEL BARS - GALVANIZED	LB.	212
MODIFIED RIPRAP	C.Y.	35
MEMBRANE WATERPROOFING (COLD LIQUID ELASTOMERIC)	S.Y.	76
DAMPPROOFING	S.Y.	135
NO. 6 CRUSHED STONE	C.Y.	75
GEOTEXTILE - (SEPARATION - MEDIUM SURVIVABILITY)	S.Y.	365
6" GRANITE STONE CURBING	L.F.	13
REMOVAL OF EXISTING MASONRY	C.Y.	210

HYDRAULIC DATA

DRAINAGE AREA	4.5 SQ. MILE
DESIGN FREQUENCY	100 YEAR
DESIGN DISCHARGE	275 CFS
UPSTREAM DESIGN WATER SURFACE ELEVATION	461.5
DOWNSTREAM DESIGN WATER SURFACE ELEVATION	459.4

PRECAST CONCRETE BOX CULVERT SHIPPING DATA

MAX SHIPPING LENGTH	MAX SHIPPING HEIGHT	MAX SHIPPING WIDTH	MAX SHIPPING WEIGHT
7.67 FT	9 FT	12.67 FT	43500 LB

NOTICE TO BRIDGE INSPECTORS

THE DEPARTMENT'S BRIDGE SAFETY PROCEDURES REQUIRE THIS BRIDGE TO BE INSPECTED FOR, BUT NOT LIMITED TO, ALL APPROPRIATE COMPONENTS INDICATED IN THE GOVERNING MANUAL FOR BRIDGE INSPECTION, ATTENTION MUST BE GIVEN TO INSPECTING THE FOLLOWING SPECIAL COMPONENTS AND DETAILS, (THE LISTING FOR SPECIFIC ATTENTION SHALL NOT BE CONSTRUED TO REDUCE THE IMPORTANCE OF INSPECTION OF ANY OTHER COMPONENT OF THE STRUCTURE). THE FREQUENCY OF INSPECTION OF THIS STRUCTURE SHALL BE IN ACCORDANCE WITH THE GOVERNING MANUALS FOR BRIDGE INSPECTION. UNLESS OTHERWISE DIRECTED BY THE MANAGER OF SAFETY AND EVALUATION.

COMPONENT OR DETAIL	STRUCTURE SHEET REFERENCE
FOLLOW NORMAL INSPECTION PROCEDURES	———

GENERAL NOTES:

SPECIFICATIONS: CONNECTICUT DEPARTMENT OF TRANSPORTATION FORM 817 (2016), SUPPLEMENTAL SPECIFICATIONS DATED JULY 2018 AND SPECIAL PROVISIONS.

DESIGN SPECIFICATION: AASHTO LRFD DESIGN SPECIFICATIONS, 7TH EDITION, WITH THE INTERIM SPECIFICATIONS UP TO AND INCLUDING (2016), AS SUPPLEMENTED BY THE CONNECTICUT DEPARTMENT OF TRANSPORTATION BRIDGE DESIGN MANUAL (2003).

MATERIAL STRENGTHS:
CONCRETE:
PCC04462..... f'c=4,000 psi
PRECAST CONCRETE BOX CULVERT..... f'c=5,000 psi
PRECAST CONCRETE WALLS..... f'c=4,000 psi

THE SPECIFIED CONCRETE STRENGTH USED IN DESIGN, f'c, OF THE CONCRETE COMPONENTS IS NOTED ABOVE. THE MINIMUM COMPRESSIVE STRENGTH OF THE CONCRETE IN THE CONSTRUCTED COMPONENTS SHALL CONFORM TO THE REQUIREMENTS OF THE SECTION 6.0.1 CONCRETE FOR STRUCTURES AND SECTION M.03 - PORTLAND CEMENT CONCRETE.

REINFORCEMENT :
(ASTM A615, GRADE 60)..... fy= 60,000 psi

LIVE LOAD: HL-93.

FUTURE PAVING ALLOWANCE: NONE.

BITUMINOUS CONCRETE OVERLAY: THIS SHALL CONSIST OF THREE LIFTS: THE FIRST SHALL BE HMA S0.25 TRAFFIC LEVEL 2 (1" UNIFORM THICKNESS), THE SECOND SHALL BE HMA S0.25 TRAFFIC LEVEL 2 (0" TO 1.5" WEDGE LIFT) AND THIRD SHALL BE HMA S0.5 TRAFFIC LEVEL 2 (2" UNIFORM THICKNESS).

FOUNDATION PRESSURES: THE LIMIT STATES NOTED ON THE WINGWALL SHEETS REFER TO LOAD COMBINATIONS AS GIVEN IN THE AASHTO LRFD BRIDGE DESIGN SPECIFICATIONS.

DIMENSIONS: WHEN DECIMAL DIMENSIONS ARE GIVEN LESS THAN THREE DECIMAL PLACES, THE OMITTED DIGITS SHALL BE ASSUMED TO BE ZEROS.

EXISTING BRIDGE: DETAILS OF THE EXISTING BRIDGE SHOWN ON THESE PLANS ARE FOR GENERAL REFERENCE ONLY. THEY HAVE BEEN TAKEN FROM THE REHABILITATION STUDY REPORT AND ARE NOT GUARANTEED. THE CONTRACTOR SHALL TAKE ALL FIELD MEASUREMENTS NECESSARY TO ASSURE PROPER FIT OF THE FINISHED WORK AND SHALL ASSUME FULL RESPONSIBILITY FOR THEIR ACCURACY. WHEN SHOP DRAWINGS BASED ON FIELD MEASUREMENTS ARE SUBMITTED FOR APPROVAL, THE FIELD MEASUREMENTS SHALL ALSO BE SUBMITTED FOR REFERENCE BY THE REVIEWER. THE REMOVAL OF THE EXISTING BRIDGE SUPERSTRUCTURE WILL BE PAID FOR UNDER THE ITEM "REMOVAL OF SUPERSTRUCTURE" AND THE REMOVAL OF EXISTING BRIDGE SUBSTRUCTURE AND WINGWALLS WILL BE PAID FOR UNDER THE ITEM "REMOVAL OF EXISTING MASONRY".

UTILITIES: THE CONTRACTOR SHALL PROTECT AND MAINTAIN ALL EXISTING UTILITIES WITHIN THE PROJECT LIMITS, UNLESS NOTED OTHERWISE. IF ANY UTILITY IS DAMAGED OR SERVICE IS INTERRUPTED DURING CONSTRUCTION, THE CONTRACTOR SHALL BE RESPONSIBLE FOR RESTORING FULL SERVICE IN A SAFE MANNER APPROVED BY THE UTILITY COMPANY AND ENGINEER.

BRIDGE IDENTIFICATION PLACARDS: THE CONTRACTOR SHALL PROVIDE AND INSTALL NEW BRIDGE IDENTIFICATION SIGNS AT THE LEADING END OF EACH BRIDGE PARAPET ON THE TRAFFIC SIDE. THE SIGNS SHALL BE FABRICATED WITH 40 GAUGE ALUMINUM SHEET METAL. THE SIGNS SHALL BE 4"X12" WITH 3" WHITE REFLECTIVE BLOCK LETTERS ON GREEN REFLECTIVE SHEETING. EACH SIGN SHALL READ: 02018. ALL COSTS ASSOCIATED WITH PROVIDING AND INSTALLING THE BRIDGE SIGNS SHALL BE COVERED UNDER ITEM 1208929 SIGN FACE-SHEET ALUMINUM (TYPE IV REFLECTIVE SHEETING). THE FINAL LOCATION AND ATTACHMENT METHOD FOR THE SIGNS SHALL BE APPROVED BY THE ENGINEER PRIOR TO INSTALLATION.

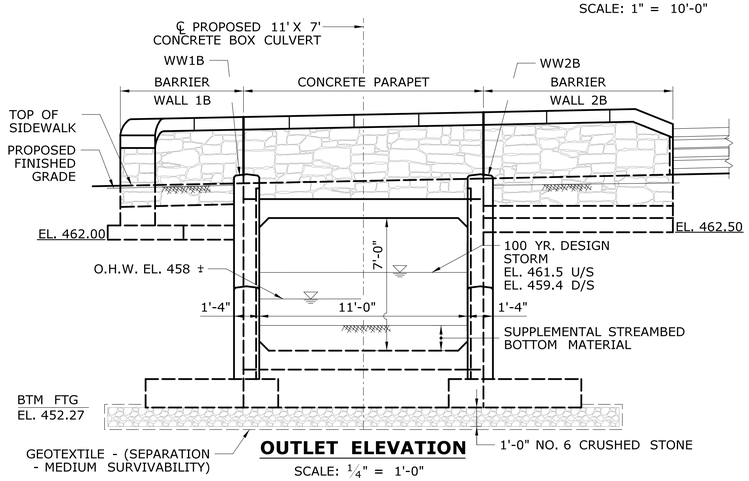

OUTLET ELEVATION

SCALE: ¼" = 1'-0"

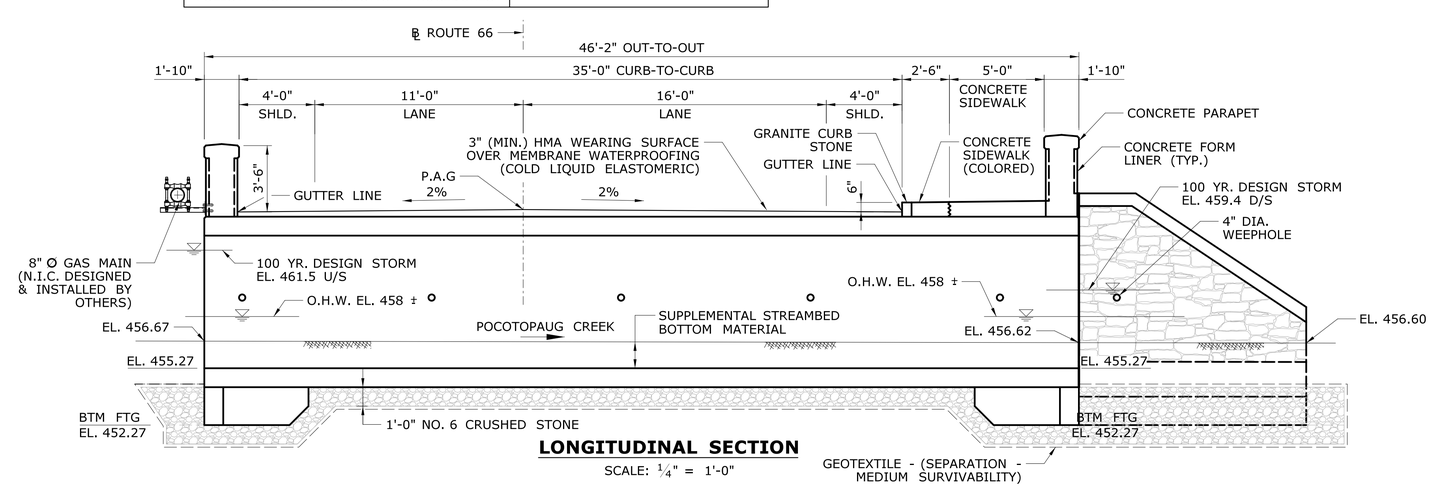

LONGITUDINAL SECTION

SCALE: ¼" = 1'-0"

REV.	DATE	REVISION DESCRIPTION	SHEET NO.

THE INFORMATION, INCLUDING ESTIMATED QUANTITIES OF WORK, SHOWN ON THESE SHEETS IS BASED ON LIMITED INVESTIGATIONS BY THE STATE AND IS IN NO WAY WARRANTED TO INDICATE THE CONDITIONS OF ACTUAL QUANTITIES OF WORK WHICH WILL BE REQUIRED.

Plotted Date: 7/16/2019

DESIGNER/DRAFTER: PS
CHECKED BY: JG
SCALE AS NOTED

STATE OF CONNECTICUT
DEPARTMENT OF TRANSPORTATION

Filename: ..\SB_MSH_41_118_GPN.dgn

SIGNATURE/BLOCK:

GM2 ASSOCIATES, INC.
115 GLASTONBURY BLVD.
GLASTONBURY, CT 06033

PROJECT TITLE:
REPLACEMENT OF BRIDGE NO. 02018 ROUTE 66 OVER POCOTOPAUG CREEK

TOWN: **EAST HAMPTON**

DRAWING TITLE: **GENERAL PLAN AND ELEVATION**

PROJECT NO. **041-118**
DRAWING NO. **STR-02**
SHEET NO. **04.02**

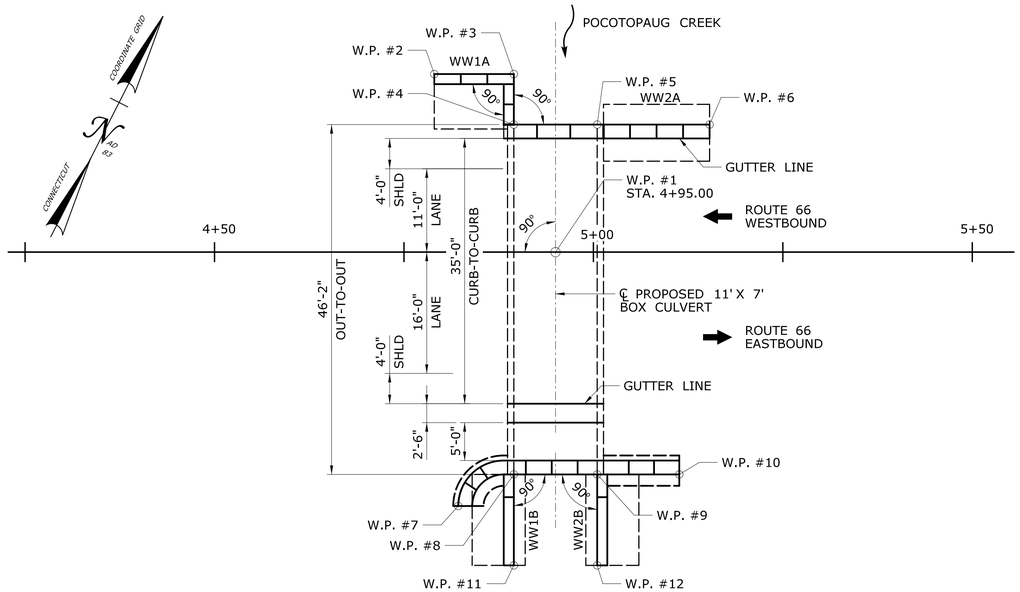

LAYOUT PLAN

SCALE: 1" = 10'

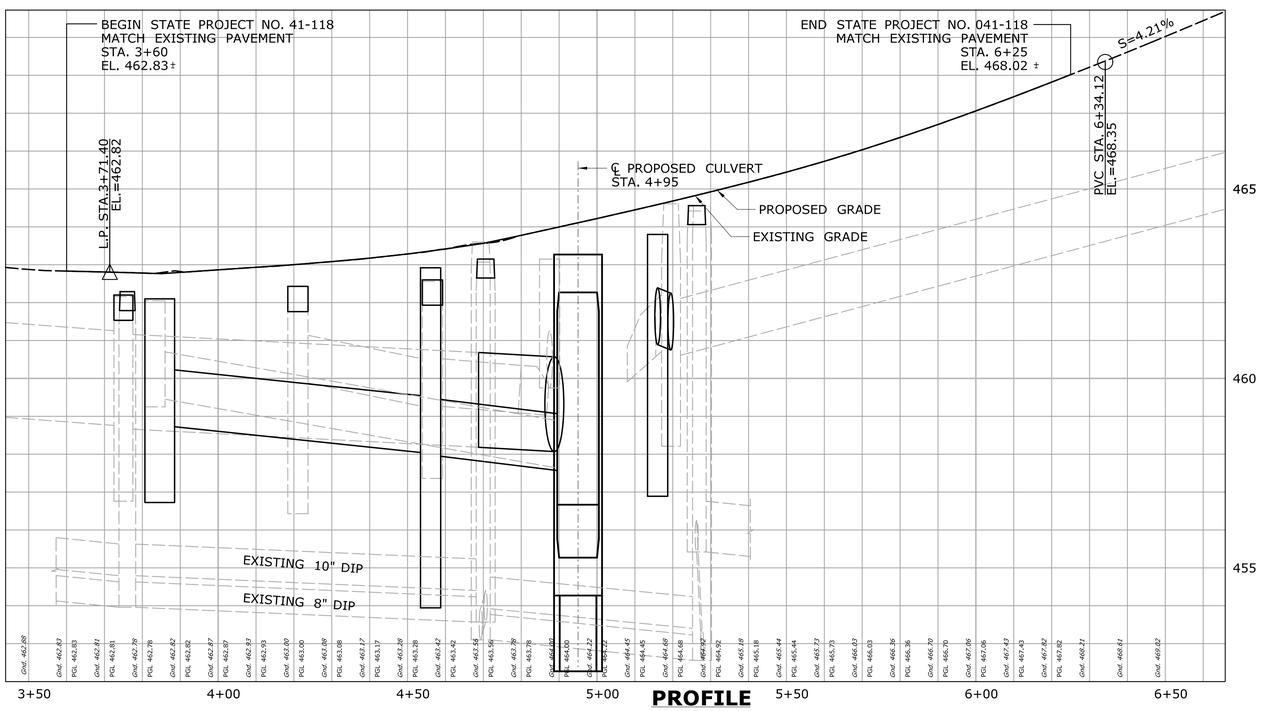

PROFILE

HORIZONTAL SCALE: 1" = 20'
VERTICAL SCALE: 1" = 2'

CONCRETE NOTES:

ITEM	BRIDGE COMPONENTS	PCC CLASS
BRIDGE SIDEWALK CONCRETE	BRIDGE SIDEWALK (CAST-IN-PLACE)	PCC04462
PRECAST WALLS	WINGWALL AND BARRIER WALL STEMS AND FOOTINGS, CUTOFF AND RETURN WALLS, WINGWALL, BARRIER WALL AND BRIDGE PARAPET (PRECAST)	PCC04460

JOINT SEAL: SEE SPECIAL PROVISIONS.

EXPOSED EDGES: EXPOSED EDGES OF CONCRETE SHALL BE BEVELED 1" X 1" UNLESS DIMENSIONED OTHERWISE.

CONCRETE COVER: ALL REINFORCEMENT SHALL HAVE 2" COVER UNLESS DIMENSIONED OTHERWISE.

GALVANIZED REINFORCING BARS: ALL REINFORCEMENT SHALL BE GALVANIZED AFTER FABRICATION UNLESS NOTED OTHERWISE. ALL REINFORCEMENT SHALL CONFORM TO THE REQUIREMENTS OF ASTM A767, CLASS 1, INCLUDING SUPPLEMENTAL REQUIREMENTS. ALL REINFORCEMENT IN THE PRECAST CONCRETE BOX CULVERT, PRECAST CONCRETE ELEMENTS AND CAST-IN-PLACE SIDEWALK ON TOP OF THE PRECAST CONCRETE BOX CULVERT SHALL BE GALVANIZED UNLESS OTHERWISE NOTED. THESE BARS IN THE PRECAST ELEMENTS SHALL BE INCLUDED UNDER THE RESPECTIVE PAY ITEM. THE BARS IN THE CAST-IN-PLACE SIDEWALK SHALL BE INCLUDED IN THE PAY ITEM "DEFORMED STEEL BARS - GALVANIZED".

PREFORMED EXPANSION JOINT FILLER: THE COST OF FURNISHING AND INSTALLING PREFORMED EXPANSION JOINT FILLER SHALL BE INCLUDED IN THE COST OF THE ITEM "PRECAST CONCRETE WALLS".

CONSTRUCTION JOINTS: CONSTRUCTION JOINTS, OTHER THAN THOSE SHOWN ON THE PLANS, WILL NOT BE PERMITTED WITHOUT PRIOR APPROVAL OF THE ENGINEER.

WORKING POINT COORDINATES

W.P.#	NORTH	EAST
1	773686.408	1068025.349
2	773700.089	1068000.427
3	773704.854	1068009.784
4	773698.913	1068012.809
5	773703.905	1068022.611
6	773710.636	1068035.829
7	773650.733	1068029.114
8	773657.773	1068033.758
9	773662.765	1068043.561
10	773667.681	1068053.214
11	773647.080	1068039.204
12	773652.072	1068049.006

REV.	DATE	REVISION DESCRIPTION	SHEET NO.

THE INFORMATION, INCLUDING ESTIMATED QUANTITIES OF WORK, SHOWN ON THESE SHEETS IS BASED ON LIMITED INVESTIGATIONS BY THE STATE AND IS IN NO WAY WARRANTED TO INDICATE THE CONDITIONS OF ACTUAL QUANTITIES OF WORK WHICH WILL BE REQUIRED.

Plotted Date: 7/16/2019

DESIGNER/DRAFTER: PS
CHECKED BY: JG
SCALE AS NOTED

STATE OF CONNECTICUT
DEPARTMENT OF TRANSPORTATION

Filename: ...\SB_MSH_41_118_LYT.dgn

SIGNATURE/BLOCK:

GM2 ASSOCIATES, INC.
115 GLASTONBURY BLVD.
GLASTONBURY, CT 06033

STATE OF CONNECTICUT
JAGDEESH G. PRASAD
LICENSED
PROFESSIONAL ENGINEER

PROJECT TITLE:
REPLACEMENT OF BRIDGE NO. 02018 ROUTE 66 OVER POCOTOPAUG CREEK

TOWN: **EAST HAMPTON**

DRAWING TITLE: **LAYOUT PLAN**

PROJECT NO. **041-118**
DRAWING NO. **STR-03**
SHEET NO. **04.03**

Driller:	M. St. John	**Connecticut DOT Boring Report**		Hole No.:	B-01
Inspector:	L. McKiernan	Town:	East Hampton, Connecticut	Stat./Offset:	4+64/4.3'L
Engineer:	GEI	Project No.:	041-118	Northing:	773681.0
Start Date:	11-28-16	Route No.:	66	Easting:	1068007.0
Finish Date:	11-28-16	Bridge No.:	02018	Surface Elevation:	463.0
Project Description:	Route 66 over Pocotopaug Creek				
Casing Size/Type:	3.5" ID / 4.0" OD	Sampler Type/Size:	SPT/2.0 " OD	Core Barrel Type:	NX
Hammer Type:	Safety Hammer	Hammer Wt.:	140 lb Fall: 30 in.		
Groundwater Observations:	5.4ft.				

Depth (ft)	Sample Type/No.	Blows on Sampler per 6 inches	Pen. (in.)	Rec. (in.)	RQD %	Generalized Strata Description	Material Description and Notes	Elevation (ft)
0						PVMT STRUCTURE	9" Asphalt	
							15" Rigid concrete	
	S1	38 25 20 12	24	21			S1A (0-4"): Light gray crushed CONCRETE, up to 1". S1B (4-10"): Dark gray to black f-c GRAVEL, up to 1.5", and f-c SAND, trace silt, dry.	
						MISC. FILL	S1C (10-21"): Brown f-c SAND, some f-c gravel, up to 1", trace silt, dry.	460
	S2	14 4 2 10	24	14			S2A (0-6"): Brown to tan f-c GRAVEL, up to 1.25", and f-c SAND, trace silt, dry.	
5						GRAVELLY SAND	S2B (6-14"): Dark gray f-c SAND, little f-m gravel, up to 3/4", little silt, trace organic fibers, moist.	
	S3	13 40 14 5	24	13			S3A (0-4"): SIMILAR TO S2B, slight organic-like odor.	
						PEAT	S3B (4-13"): Dark gray to black ORGANICS, mostly decomposing wood, organic odor, wet.	
	S4	10 12 20 15	24	9		GRAVELLY SAND	S4: Gray f-c SAND, some f-c gravel, up to 1.5", little silt, moist.	455
10	S5	4 14 24 79	24	19			S5: Gray f-c SAND, little f-m gravel, up to 3/4", trace silt, moist.	
								450

Sample Type: S = Split Spoon R = Rock Core T = Undisturbed Piston V = Vane Shear Test

Proportions Used: Trace = 1 - 10%, Little = 10 - 20%, Some = 20 - 35%, And = 35 - 50%

Total Penetration in Earth: 14 ft. Rock: 6 ft.	NOTES:	Sheet 1 of 2
No. of Soil Samples: 6 No. of Core Runs: 1		SM-001-M REV. 1/02

Driller:	M. St. John	**Connecticut DOT Boring Report**		Hole No.:	B-01
Inspector:	L. McKiernan	Town:	East Hampton, Connecticut	Stat./Offset:	4+64/4.3'L
Engineer:	GEI	Project No.:	041-118	Northing:	773681.0
Start Date:	11-28-16	Route No.:	66	Easting:	1068007.0
Finish Date:	11-28-16	Bridge No.:	02018	Surface Elevation:	463.0
Project Description:	Route 66 over Pocotopaug Creek				
Casing Size/Type:	3.5" ID / 4.0" OD	Sampler Type/Size:	SPT/2.0 " OD	Core Barrel Type:	NX
Hammer Type:	Safety Hammer	Hammer Wt.:	140 lb Fall: 30 in.		
Groundwater Observations:	5.4ft.				

Depth (ft)	Sample Type/No.	Blows on Sampler per 6 inches	Pen. (in.)	Rec. (in.)	RQD %	Generalized Strata Description	Material Description and Notes	Elevation (ft)
						GRAVELLY SAND *(con't)*		450
						BEDROCK	Rock encountered @ 14.0 ft. Slow advance with roller bit to 15.0 ft.	
15	C1		60	59	83		C1 (15.0-20.0 ft): Dark gray to gray SCHIST, medium- to coarse-grained, massive, highly fractured, slightly weathered, strong. CORE TIMES: 15.0-16.0 ft: 4.5 min 16.0-17.0 ft: 5.0 min 17.0-18.0 ft: 5.5 min 18.0-19.0 ft: 5.0 min 19.0-20.0 ft: 6.0 min	
								445
20							End of Boring at 20 ft. Planned Extent. Borehole backfilled with cuttings, supplemented by 3/4" stone. Patched at surface.	

Sample Type: S = Split Spoon R = Rock Core T = Undisturbed Piston V = Vane Shear Test

Proportions Used: Trace = 1 - 10%, Little = 10 - 20%, Some = 20 - 35%, And = 35 - 50%

Total Penetration in Earth: 14 ft. Rock: 6 ft.	NOTES:	Sheet 2 of 2
No. of Soil Samples: 6 No. of Core Runs: 1		SM-001-M REV. 1/02

REV.	DATE	REVISION DESCRIPTION	SHEET NO.

THE INFORMATION, INCLUDING ESTIMATED QUANTITIES OF WORK, SHOWN ON THESE SHEETS IS BASED ON LIMITED INVESTIGATIONS BY THE STATE AND IS IN NO WAY WARRANTED TO INDICATE THE CONDITIONS OF ACTUAL QUANTITIES OF WORK WHICH WILL BE REQUIRED.

Plotted Date: 7/16/2019

DESIGNER/DRAFTER: PS

CHECKED BY: JG

SCALE AS NOTED

STATE OF CONNECTICUT
DEPARTMENT OF TRANSPORTATION

Filename: ...\SB_MSH_41_118_Boring Logs (B-01).dgn

SIGNATURE/BLOCK:

GM2 ASSOCIATES, INC.
115 GLASTONBURY BLVD.
GLASTONBURY, CT 06033

PROJECT TITLE:

REPLACEMENT OF BRIDGE NO. 02018 ROUTE 66 OVER POCOTOPAUG CREEK

TOWN: **EAST HAMPTON**

DRAWING TITLE: **BORING LOGS NO. 1**

PROJECT NO. **041-118**

DRAWING NO. **STR-04**

SHEET NO. **04.04**

Driller:	M. St. John	**Connecticut DOT Boring Report**		Hole No.:	B-02
Inspector:	L. McKiernan	Town:	East Hampton, Connecticut	Stat./Offset:	5+32/9.7'R
Engineer:	GEI	Project No.:	041-118	Northing:	773696.0
Start Date:	11-28-16	Route No.:	66	Easting:	1068065.0
Finish Date:	11-28-16	Bridge No.:	02018	Surface Elevation:	464.5
Project Description:	Route 66 over Pocotopaug Creek				
Casing Size/Type:	3.5" ID / 4.0" OD	Sampler Type/Size:	SPT/2.0 " OD	Core Barrel Type:	NX
Hammer Type:	Safety Hammer	Hammer Wt.:	140 lb Fall: 30 in.		
Groundwater Observations:	8.3ft.				

Depth (ft)	SAMPLES Sample Type/No.	Blows on Sampler per 6 inches	Pen. (in.)	Rec. (in.)	RQD %	Generalized Strata Description	Material Description and Notes	Elevation (ft)
0						PVMT STRUCTURE	9" Asphalt 15" Rigid concrete	
	S1	26 65 23 11	24	9			S1A (0-6"): Gray to brown f-c SAND and f-c GRAVEL, up to 1", little silt, dry. S1B (6-9"): Dark Gray f-c GRAVEL up to 1", some f-c sand, trace silt, dry.	
	S2	6 10 11 40	24	10		GRAVELLY SAND	S2: Brown f-c SAND, some f-c gravel, up to 1.5", some silt, moist. Slight organic odor.	460
5	S3	20 14 8 8	24	5			S3: Similar to S2	
	S4	16 35 24 16	24	13			S4: Brown f-m SAND, some f-m gravel, up to 3/4", little silt, moist.	455
10	S5	100/5"	5	3			S5: Brown/gray f-c SAND and f-c gravel, up to 1", some silt, wet.	
						WEATHERED BEDROCK	Weathered rock @ 10.5 ft. Advance with augers, then roller bit.	
						BEDROCK	Bedrock encountered @ 13.0 ft. Slow advance with roller bit to 15.0 ft.	450
15	C1		60	40	28		C1 (15.0-20.0 ft): Dark gray to gray SCHIST, coarse-grained, massive, intensely fractured, moderately to highly weathered, weak to medium strong. CORE TIMES: 15.0-16.0 ft: 3.0 min 16.0-17.0 ft: 3.0 min 17.0-18.0 ft: 3.0 min 18.0-19.0 ft: 1.0 min 19.0-20.0 ft: 1.0 min	
20								445

Sample Type: S = Split Spoon R = Rock Core T = Undisturbed Piston V = Vane Shear Test

Proportions Used: Trace = 1 - 10%, Little = 10 - 20%, Some = 20 - 35%, And = 35 - 50%

Total Penetration in Earth: 13 ft. Rock: 12 ft.	NOTES:	Sheet 1 of 2
No. of Soil Samples: 7 No. of Core Runs: 2		SM-001-M REV. 1/02

Driller:	M. St. John	**Connecticut DOT Boring Report**		Hole No.:	B-02
Inspector:	L. McKiernan	Town:	East Hampton, Connecticut	Stat./Offset:	5+32/9.7'R
Engineer:	GEI	Project No.:	041-118	Northing:	773696.0
Start Date:	11-28-16	Route No.:	66	Easting:	1068065.0
Finish Date:	11-28-16	Bridge No.:	02018	Surface Elevation:	464.5
Project Description:	Route 66 over Pocotopaug Creek				
Casing Size/Type:	3.5" ID / 4.0" OD	Sampler Type/Size:	SPT/2.0 " OD	Core Barrel Type:	NX
Hammer Type:	Safety Hammer	Hammer Wt.:	140 lb Fall: 30 in.		
Groundwater Observations:	8.3ft.				

Depth (ft)	SAMPLES Sample Type/No.	Blows on Sampler per 6 inches	Pen. (in.)	Rec. (in.)	RQD %	Generalized Strata Description	Material Description and Notes	Elevation (ft)
20	C2		60	46	33	BEDROCK *(con't)*	C2 (20.0-25.0 ft): Dark gray to gray SCHIST, coarse-grained, massive, intensely fractured, moderately to highly weathered, weak to medium strong. CORE TIMES: 20.0-21.0 ft: 1.5 min 21.0-22.0 ft: 1.5 min 22.0-23.0 ft: 1.5 min 23.0-24.0 ft: 1.5 min 24.0-25.0 ft: 1.5 min	440
25							End of Boring at 25 ft. Planned Extent. Borehole backfilled with cuttings, supplemented by 3/4" stone. Patched at surface.	

Sample Type: S = Split Spoon R = Rock Core T = Undisturbed Piston V = Vane Shear Test

Proportions Used: Trace = 1 - 10%, Little = 10 - 20%, Some = 20 - 35%, And = 35 - 50%

Total Penetration in Earth: 13 ft. Rock: 12 ft.	NOTES:	Sheet 2 of 2
No. of Soil Samples: 7 No. of Core Runs: 2		SM-001-M REV. 1/02

REV.	DATE	REVISION DESCRIPTION	SHEET NO.

THE INFORMATION, INCLUDING ESTIMATED QUANTITIES OF WORK, SHOWN ON THESE SHEETS IS BASED ON LIMITED INVESTIGATIONS BY THE STATE AND IS IN NO WAY WARRANTED TO INDICATE THE CONDITIONS OF ACTUAL QUANTITIES OF WORK WHICH WILL BE REQUIRED.

Plotted Date: 7/16/2019

DESIGNER/DRAFTER: PS

CHECKED BY: JG

SCALE AS NOTED

STATE OF CONNECTICUT
DEPARTMENT OF TRANSPORTATION

Filename: ...\SB_MSH_41_118_Boring Logs (B-02).dgn

SIGNATURE/BLOCK:

GM2 ASSOCIATES, INC.
115 GLASTONBURY BLVD.
GLASTONBURY, CT 06033

PROJECT TITLE:
REPLACEMENT OF BRIDGE NO. 02018 ROUTE 66 OVER POCOTOPAUG CREEK

TOWN: EAST HAMPTON

DRAWING TITLE: BORING LOGS NO. 2

PROJECT NO. 041-118

DRAWING NO. STR-05

SHEET NO. 04.05

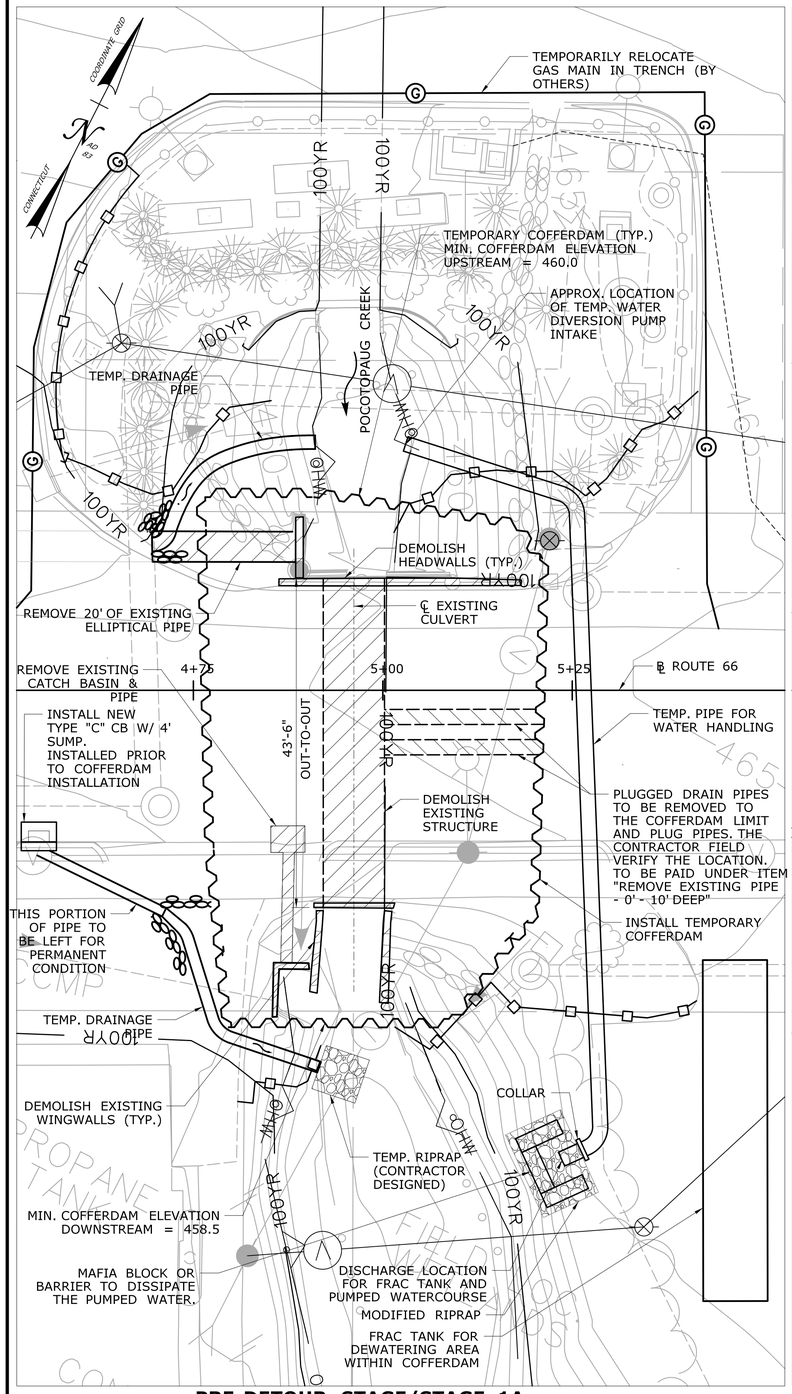

PRE-DETOUR STAGE/STAGE 1A

SCALE: 1" = 10'

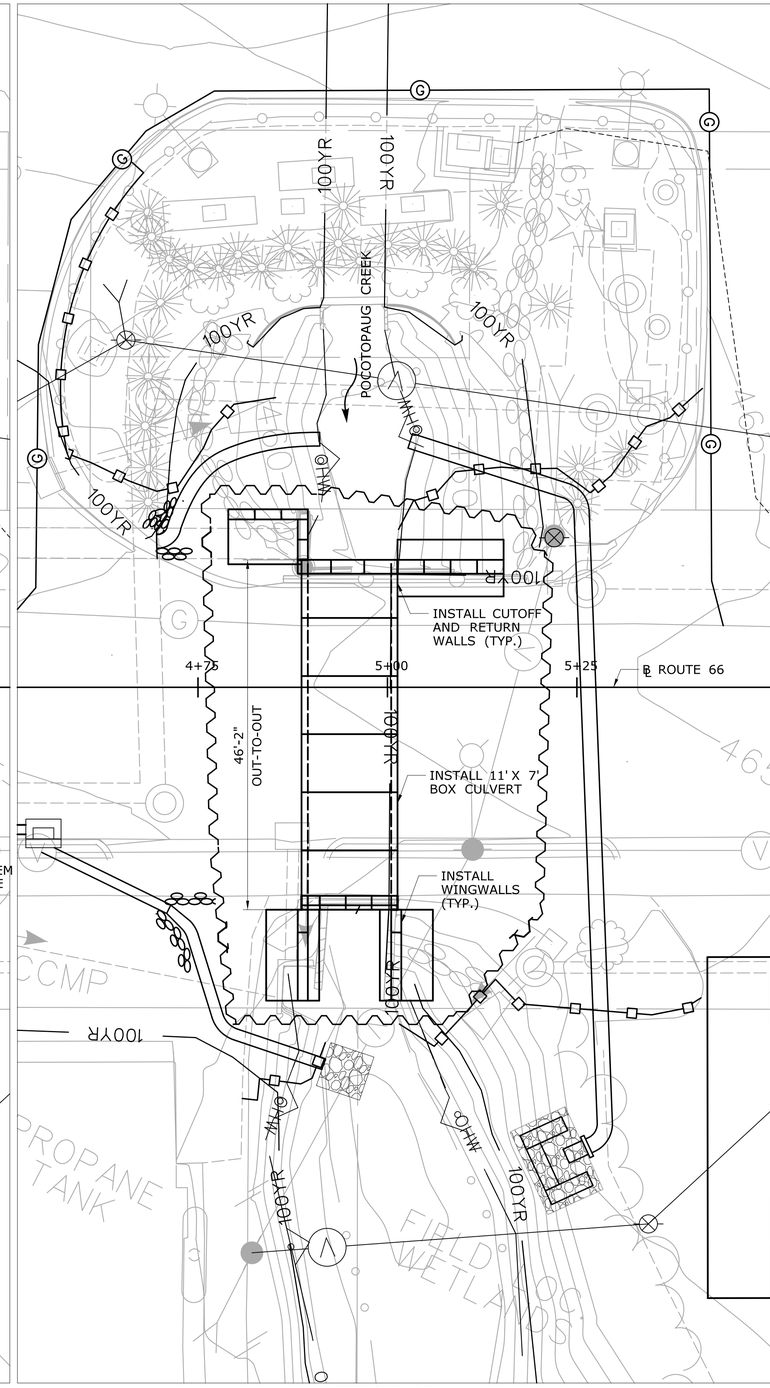

STAGE 1B

SCALE: 1" = 10'

SUGGESTED SEQUENCE OF CONSTRUCTION:

THE FOLLOWING SEQUENCE AND IMPLIED METHODS OF CONSTRUCTION ARE SUGGESTED AND ARE INTENDED TO CONVEY THE ASSUMPTIONS MADE BY THE DESIGNER TO DEVELOP THE REQUIREMENTS FOR REGULATORY PERMITS INCLUDED IN THE CONTRACT DOCUMENTS. THE CONTRACTOR SHALL BE RESPONSIBLE FOR SELECTING HIS MEANS AND METHODS FOR COMPLETION OF THE PROJECT AND SHALL SUBMIT WORKING DRAWINGS TO THE ENGINEER FOR APPROVAL PRIOR TO STARTING WORK.

TRAFFIC SHALL BE MAINTAINED AT ALL TIMES IN ACCORDANCE WITH THE PROVISIONS FOR "MAINTENANCE AND PROTECTION OF TRAFFIC" AND "PROSECUTION AND PROGRESS". REFER TO MPT PLANS FOR SUGGESTED TRAFFIC CONTROLS.

THE INTENT OF THE COFFERDAMS ARE TO MINIMIZE GROUND WATER INFILTRATION IN ADDITION TO ACTING AS A TEMPORARY EARTH RETAINING SYSTEM. SEE STANDARD SPECIFICATION FOR "COFFERDAM AND DEWATERING".

PRE-DETOUR STAGE

1. PERFORM UTILITY RELOCATIONS (OVERHEAD AND UNDERGROUND)
2. INSTALL SEDIMENTATION AND EROSION CONTROLS.
3. REMOVE PLUGGED DRAIN PIPES TO THE COFFERDAM LIMIT AND PLUG PIPES.
4. INSTALL SOUTHWEST CATCH BASIN AT STA. 4+55 AND INSTALL 18" RCP TO CONNECT TO EXISTING CATCH BASIN AT STA. 3+85. INSTALL TEMPORARY DRAINAGE TO THE DOWNSTREAM SIDE. REMOVE EXISTING 15" ACCMP.
5. TEMPORARILY RELOCATE THE GAS MAIN OUT OF THE COFFERDAM LIMITS. GAS LINE TO BE BURIED AND PROTECTED.
6. CONSTRUCT TEMPORARY DRIVEWAYS NORTH OF THE BRIDGE. SEE MPT PLANS.
7. INSTALL FRAC TANK FOR DEWATERING.
8. INSTALL BARRIER TO DISSIPATE ENERGY OF PUMPED WATER ON THE DOWNSTREAM SIDE.
9. REMOVE SECTION OF ELLIPTICAL DRAINAGE PIPE ON NORTH SIDE OF BRIDGE AND DIVERT FLOWS UTILIZING A TEMPORARY DRAINAGE PIPE TO UPSTREAM SIDE.
10. REMOVE EXISTING CATCH BASIN AND PIPE AT STA. 4+85.
11. INSTALL TYPE "C-L" DOUBLE GRATE AT STATION 3+85 RT, 18" RCP AND THE TYPE "C" CATCH BASIN WITH 4' SUMP PRIOR TO THE DETOUR.

STAGE 1A

1. CLOSE THE ROAD TO VEHICULAR TRAFFIC WHILE MAINTAINING ACCESS TO ADJACENT DRIVEWAYS.
2. DEMOLISH EXISTING BRIDGE AND WINGWALLS AS SHOWN IN STAGE 1A.
3. MAINTAIN STREAM FLOW BY PUMPING WATER FROM THE UPSTREAM SIDE TO THE DOWNSTREAM SIDE. REFER TO SPECIAL PROVISION "HANDLING WATER" FOR ADDITIONAL INFORMATION.
4. INSTALL COFFERDAM DOWN TO BED ROCK TO PROVIDE A CUTOFF AGAINST GROUND WATER INFILTRATION. COFFERDAMS MAY NEED TO BE BRACED.

STAGE 1B

1. DEWATER THE SITE AS NECESSARY. GROUND WATER IS CONTAMINATED. SEE SPECIAL PROVISIONS FOR REQUIREMENTS FOR HANDLING GROUND WATER.
2. GRADE FOR CUT-OFF AND RETURN WALLS, CULVERT AND WINGWALLS. PLACE GEOTEXTILE AND NO. 6 CRUSHED STONE BEDDING MATERIAL.
3. INSTALL PRECAST CONCRETE CUT-OFF WALLS AND RETURN WALLS.
4. INSTALL PRECAST CONCRETE BOX CULVERT AND WINGWALLS.
5. INSTALL PRECAST CONCRETE PARAPET WALLS ON BOX CULVERT.

STAGE 1C

1. BACKFILL CULVERT AND WINGWALLS WITH PERVIOUS STRUCTURE BACKFILL.
2. INSTALL PRECAST CONCRETE BARRIER WALLS.
3. PLACE NATURAL STREAMBED MATERIAL.
5. REMOVE SECTION OF COFFERDAM AND INSTALL ELLIPTICAL DRAINAGE PIPE AND BACKFILL AND REMOVE TEMPORARY DRAINAGE PIPE.
6. REMOVE ENTIRE COFFERDAM ENCLOSURE.
7. REMOVE DEWATERING BASIN, TEMPORARY PIPE AND WATER DISSIPATION BARRIER.
8. PLACE MEMBRANE WATERPROOFING.
9. INSTALL CATCH BASIN AT STA. 5+16 AND INSTALL 18" RCP ON SOUTH WEST AND SOUTH EAST SIDES OF CULVERT AND REMOVE TEMPORARY DRAINAGE PIPE.
10. INSTALL PAVEMENT AND CONSTRUCT ROADWAY APPROACHES EXCEPT FOR FINAL COURSE OF PAVEMENT.

STAGE 2

1. INSTALL TPCBC AND TEMPORARY IMPACT ATTENUATION UNIT.
2. OPEN ROAD TO TRAFFIC.
3. CONSTRUCT SIDEWALK.
4. INSTALL GUIDERAIL AND REMOVE TPCBC.

FINAL CONDITION

1. RELOCATE GAS LINE TO FINAL LOCATION BY OTHERS.
2. INSTALL TOP COURSE OF PAVEMENT AND PAVEMENT MARKINGS.
3. RESTORE LANDSCAPING.
4. RESTORE ALL DRIVEWAYS AND PARKING AREAS.
5. COMPLETE ALL OTHER ANCILLARY WORK CALLED FOR IN THE PROJECT.

WATER HANDLING NOTES:

1. THE CONTRACTOR SHALL MAINTAIN WATER THROUGH THE TEMPORARY PIPE AS SHOWN DURING CONSTRUCTION OF THE NEW STRUCTURE.
2. EQUIPMENT SHALL NOT BE PERMITTED IN THE STREAM WHEN TEMPORARY PIPE IS NOT IN PLACE WITHOUT APPROVAL FROM THE ENGINEER.
3. TEMPORARY COFFERDAM SHALL CONSIST OF SHEET PILES OR ANY OTHER APPROVED SYSTEM THAT THE CONTRACTOR ELECTS TO USE WHICH SHALL BE SAFE, WATER TIGHT AS NECESSARY TO MINIMIZE GROUNDWATER INFILTRATION, SHALL BE ABLE TO SUPPORT CONSTRUCTION ACTIVITY AND EXCAVATION, AND SHALL CONFORM TO PERMITS.
4. THE TEMPORARY PIPE OR TEMPORARY DRAINAGE PIPES ARE TO BE DESIGNED BY THE CONTRACTOR TO HANDLE THE EXPECTED STORM FLOWS AND ARE TO BE DISCHARGED TO A STABLE LOCATION WITHIN THE PROPOSED IMPACT AREAS. ALL DISTURBED AREAS TO BE RESTORED.
5. THE COST FOR MAFIA BLOCKS/BARRIER USED FOR DISSIPATING THE PUMPED WATER, TEMPORARY PIPE FOR WATER HANDLING AND TEMP. DRAINAGE PIPES SHALL BE INCLUDED UNDER ITEM "HANDLING WATER"

REMOVAL/DEMOLISH LIMITS

TEMPORARY HYDRAULIC DATA	
AVERAGE DAILY FLOW	8 CFS
AVERAGE SPRING FLOW	16 CFS
2-YEAR FREQUENCY DISCHARGE	25 CFS
TEMPORARY DESIGN DISCHARGE	12 CFS
TEMPORARY DESIGN FREQUENCY	(½) 2-YEAR FLOW
TEMPORARY WATER SURFACE ELEVATION UPSTREAM	458.0 FT
TEMPORARY WATER SURFACE ELEVATION DOWNSTREAM	457.5 FT

REV.	DATE	REVISION DESCRIPTION	SHEET NO.

THE INFORMATION, INCLUDING ESTIMATED QUANTITIES OF WORK, SHOWN ON THESE SHEETS IS BASED ON LIMITED INVESTIGATIONS BY THE STATE AND IS IN NO WAY WARRANTED TO INDICATE THE CONDITIONS OF ACTUAL QUANTITIES OF WORK WHICH WILL BE REQUIRED.

Plotted Date: 7/16/2019

DESIGNER/DRAFTER: PS
CHECKED BY: LP
SCALE AS NOTED

STATE OF CONNECTICUT
DEPARTMENT OF TRANSPORTATION

Filename: ...\SB_MSH_41_118_WH & STG1.dgn

SIGNATURE/ BLOCK:

GM2 ASSOCIATES, INC.
115 GLASTONBURY BLVD.
GLASTONBURY, CT 06033

PROJECT TITLE:
REPLACEMENT OF BRIDGE NO. 02018 ROUTE 66 OVER POCOTOPAUG CREEK

TOWN: **EAST HAMPTON**

DRAWING TITLE:
STAGING/ WATER HANDLING PLAN - 1

PROJECT NO. **041-118**
DRAWING NO. **STR-06**
SHEET NO. **04.06**

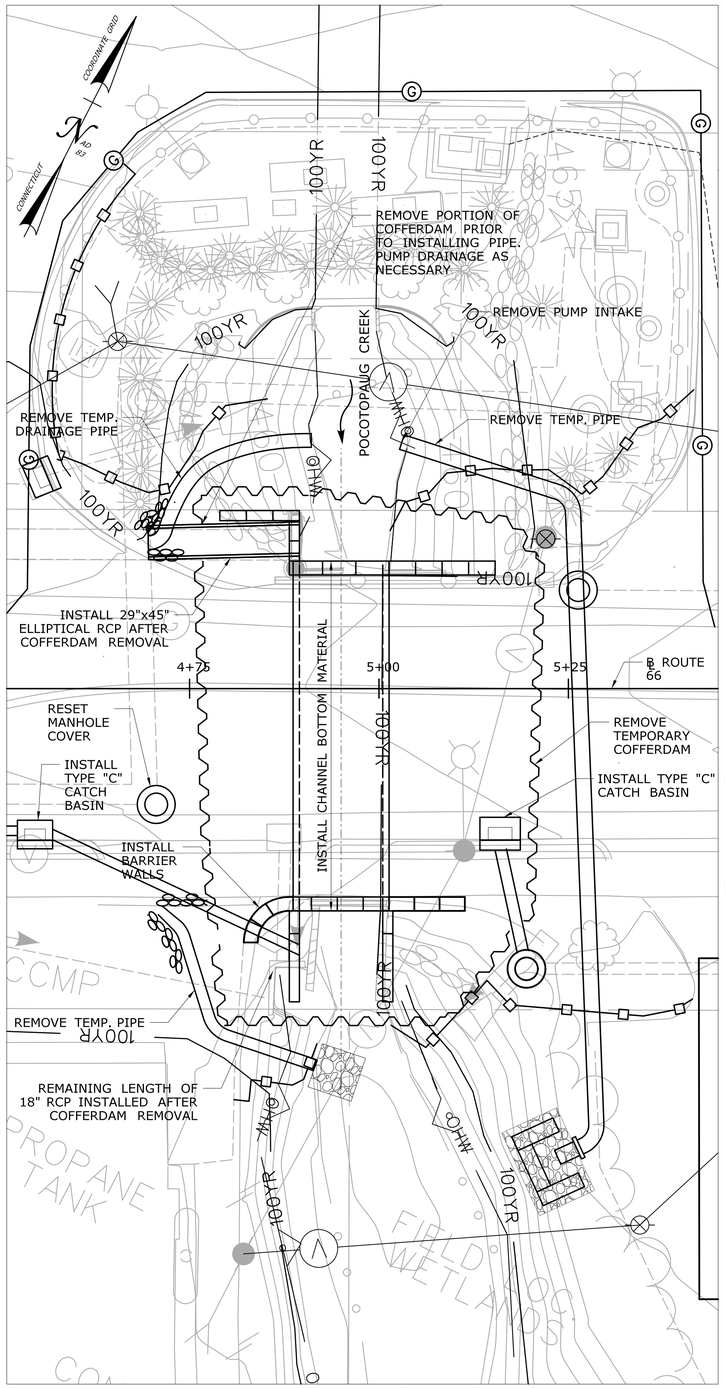

STAGE 1C

SCALE: 1" = 10'

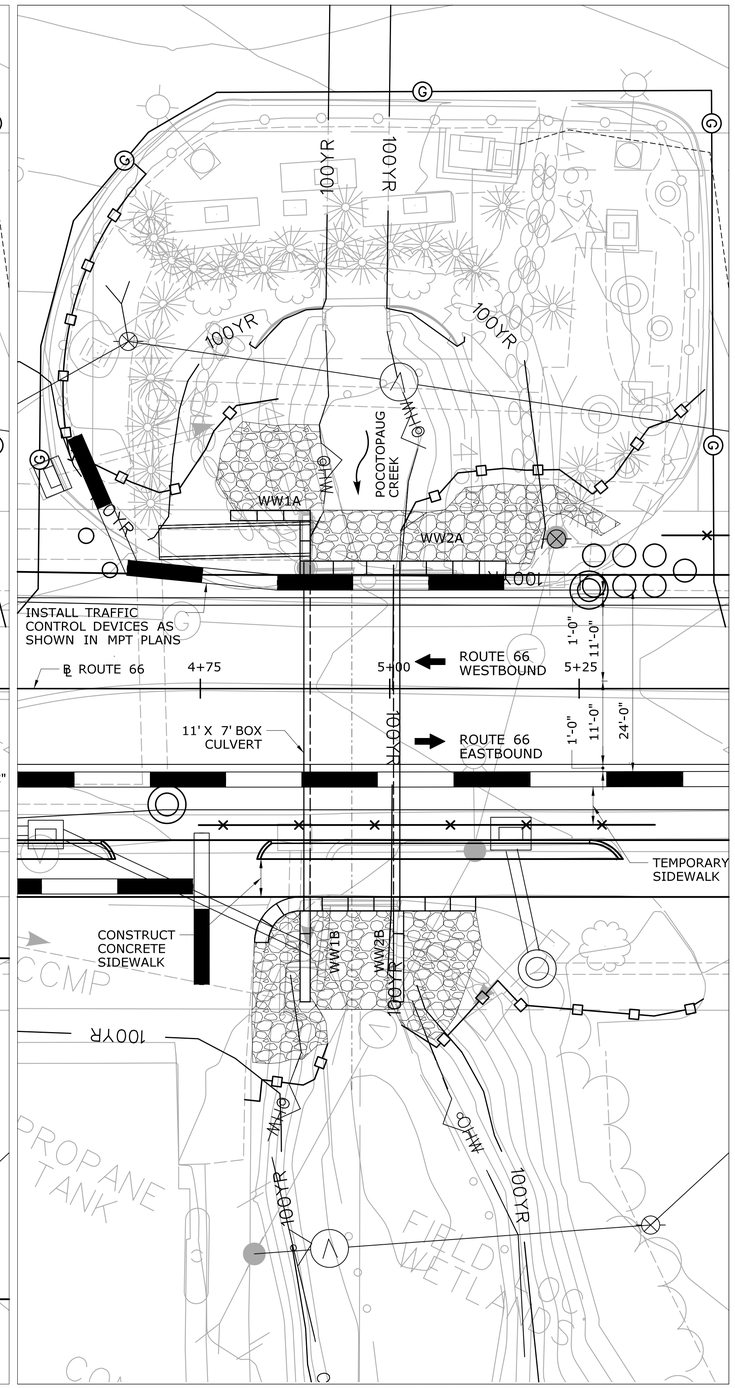

STAGE 2

SCALE: 1" = 10'

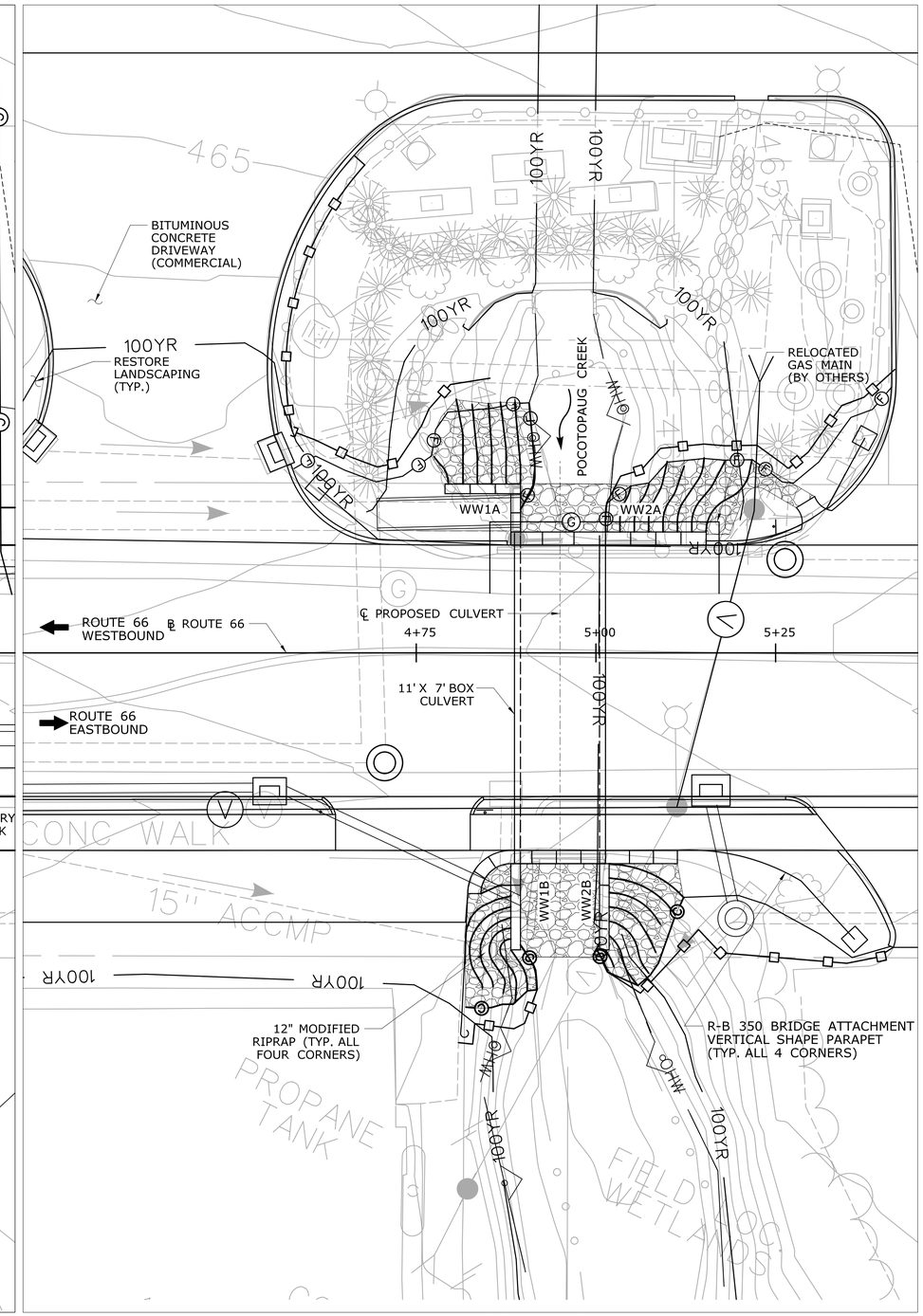

FINAL CONDITION

SCALE: 1" = 10'

REV.	DATE	REVISION DESCRIPTION	SHEET NO.

THE INFORMATION, INCLUDING ESTIMATED QUANTITIES OF WORK, SHOWN ON THESE SHEETS IS BASED ON LIMITED INVESTIGATIONS BY THE STATE AND IS IN NO WAY WARRANTED TO INDICATE THE CONDITIONS OF ACTUAL QUANTITIES OF WORK WHICH WILL BE REQUIRED.

Plotted Date: 7/16/2019

DESIGNER/DRAFTER: PS

CHECKED BY: JG

SCALE AS NOTED

STATE OF CONNECTICUT
DEPARTMENT OF TRANSPORTATION

Filename: ..\SB_MSH_41_118_WH & STG2.dgn

SIGNATURE/ BLOCK:

STATE OF CONNECTICUT JOSEPH GIORDANO LICENSED PROFESSIONAL ENGINEER

GM2 ASSOCIATES, INC.
115 GLASTONBURY BLVD.
GLASTONBURY, CT 06033

PROJECT TITLE:

REPLACEMENT OF BRIDGE NO. 02018 ROUTE 66 OVER POCOTOPAUG CREEK

TOWN: **EAST HAMPTON**

DRAWING TITLE: **STAGING/ WATER HANDLING PLAN - 2**

PROJECT NO. **041-118**

DRAWING NO. **STR-07**

SHEET NO. **04.07**

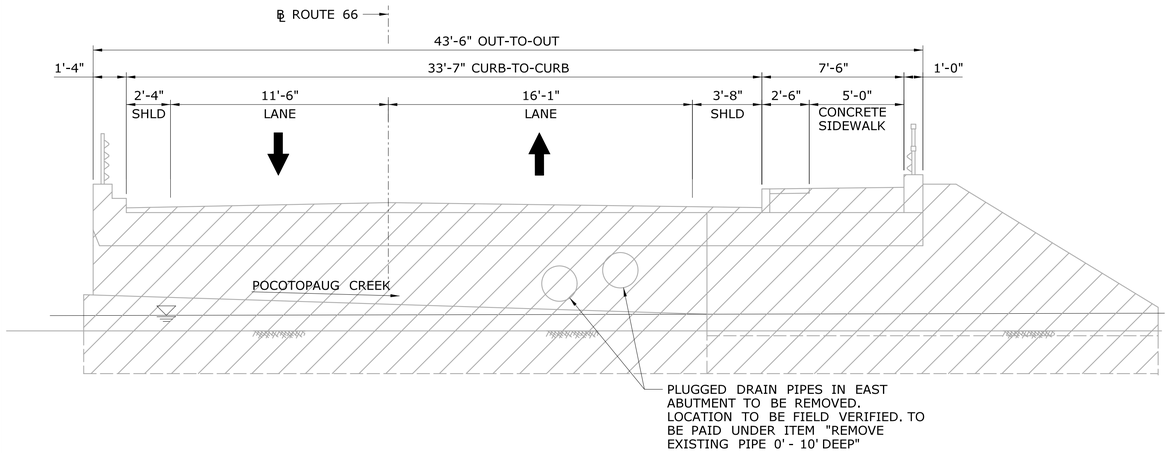

PRE-DETORU/STAGE 1A

SCALE: 1/4" = 1'-0"

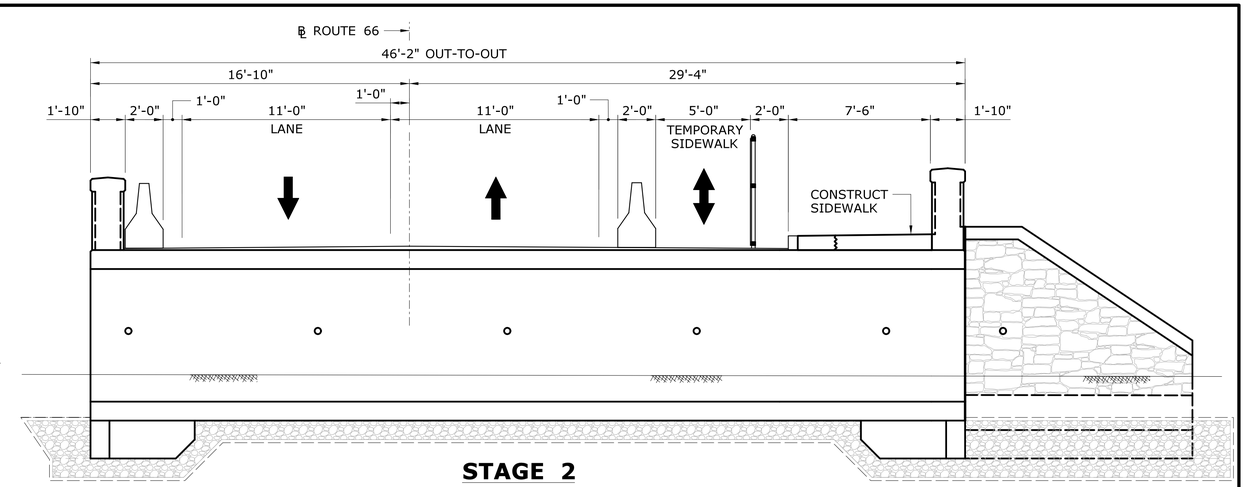

STAGE 2

SCALE: 1/4" = 1'-0"

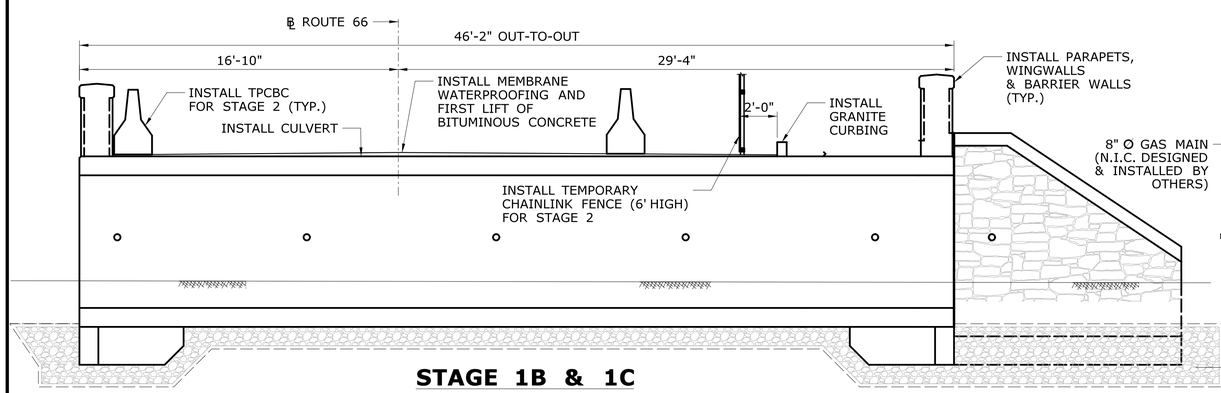

STAGE 1B & 1C

SCALE: 1/4" = 1'-0"

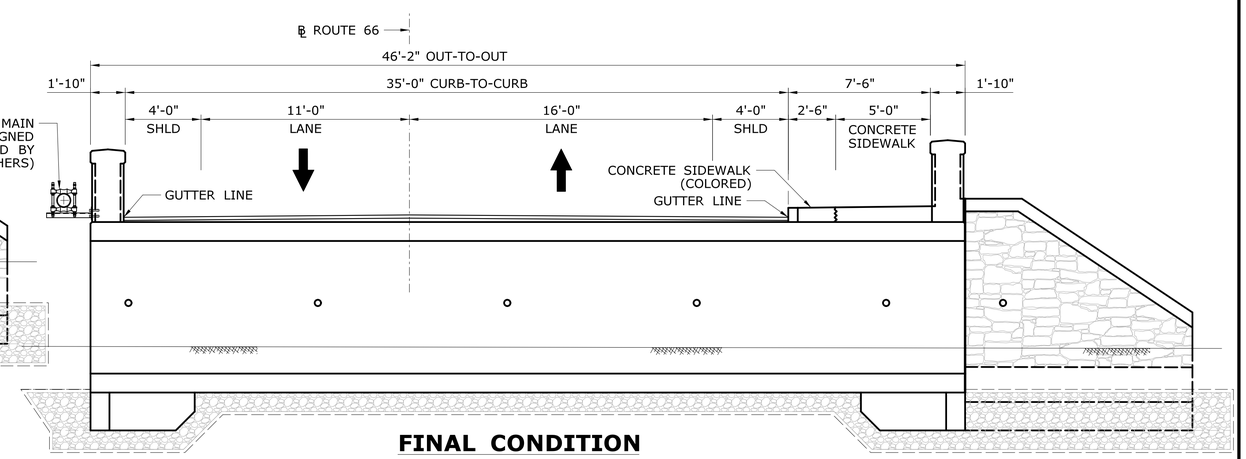

FINAL CONDITION

SCALE: 1/4" = 1'-0"

NOTE:

SEE STAGING/WATER HANDLING PLAN - 1 (DWG. STR-06) FOR SEQUENCE OF CONSTRUCTION.

REV.	DATE	REVISION DESCRIPTION	SHEET NO.

THE INFORMATION, INCLUDING ESTIMATED QUANTITIES OF WORK, SHOWN ON THESE SHEETS IS BASED ON LIMITED INVESTIGATIONS BY THE STATE AND IS IN NO WAY WARRANTED TO INDICATE THE CONDITIONS OF ACTUAL QUANTITIES OF WORK WHICH WILL BE REQUIRED.

Plotted Date: 7/16/2019

DESIGNER/DRAFTER: PS

CHECKED BY: JG

SCALE AS NOTED

STATE OF CONNECTICUT
DEPARTMENT OF TRANSPORTATION

Filename: ...\SB_MSH_41_118_STG.dgn

SIGNATURE/BLOCK:

GM2 ASSOCIATES, INC.
115 GLASTONBURY BLVD.
GLASTONBURY, CT 06033

PROJECT TITLE:

REPLACEMENT OF BRIDGE NO. 02018 ROUTE 66 OVER POCOTOPAUG CREEK

TOWN: **EAST HAMPTON**

DRAWING TITLE: **STAGE CONSTRUCTION SECTIONS**

PROJECT NO. **041-118**

DRAWING NO. **STR-08**

SHEET NO. **04.08**

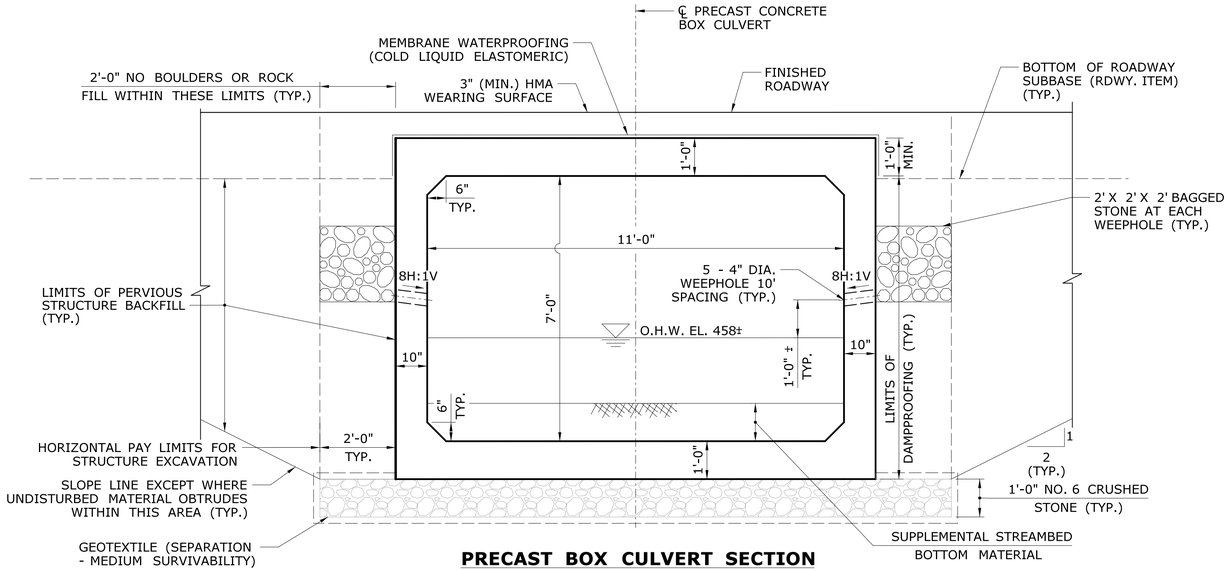

PRECAST BOX CULVERT SECTION

SCALE: ½" = 1'-0"

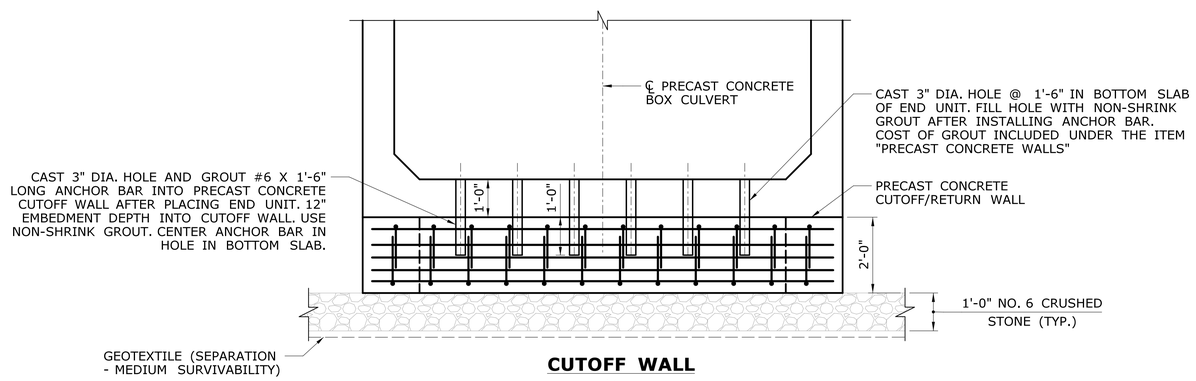

CUTOFF WALL

SCALE: ½" = 1'-0"

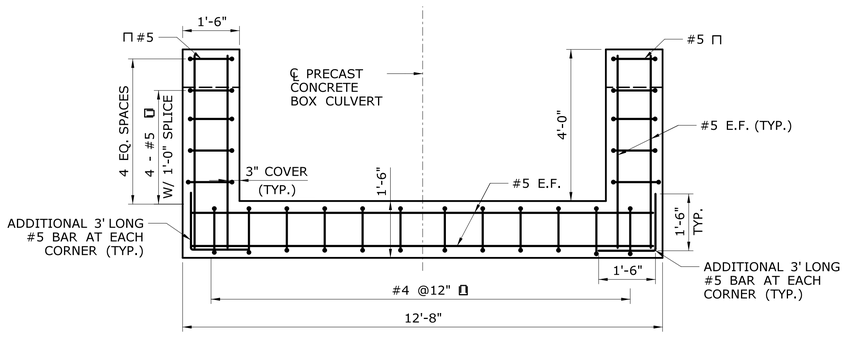

NORTH & SOUTH (INLET AND OUTLET) CUTOFF WALL

SCALE: ½" = 1'-0"

NOTES:

1. THE CONTRACTOR SHALL DESIGN, MANUFACTURE AND CONSTRUCT PRECAST BOX CULVERT IN ACCORDANCE WITH THE SPECIAL PROVISION FOR "11'X7' PRECAST CONCRETE BOX CULVERT" TO THE DIMENSIONS, LENGTH AND DETAILS SHOWN ON THESE PLANS.
2. ALL INSERTS OR HOLES CAST INTO THE CULVERT SECTIONS FOR THE SOLE PURPOSE OF HANDLING AND SETTING THE UNITS SHALL BE GROUTED OVER TO A SMOOTH FINISH UPON COMPLETION OF THE WORK.
3. NON-SHRINK GROUT SHALL BE USED TO GROUT THE REINFORCEMENT.
4. THE COST OF FURNISHING AND INSTALLING INSERTS SHALL BE INCLUDED IN THE "ITEM #0601134 - 11' X 7' PRECAST CONCRETE BOX CULVERT" AND SHALL BE ONE OF THE FOLLOWING:
   1. STAR EXPANSION INDUSTRIES CORP. TYPE P-35-T
   2. RICHMOND SCREW ANCHOR CO. TYPE LF
   3. DAYTON SUPERIOR CORP. TYPE F-57

   ALL INSERTS SHALL HAVE A CORROSIVE RESISTANT COATING.
5. ALL REINFORCEMENT TO HAVE 2" COVER UNLESS OTHERWISE NOTED.
6. ALL REINFORCING PROJECTING OUT OF THE CULVERT FOR SIDEWALK SHALL BE INCLUDED UNDER THE ITEM "11'X7' PRECAST CONCRETE BOX CULVERT"
7. ALL PRECAST ELEMENTS SHALL BE EITHER MATCH-CASTED OR TEST FIT FOR ASSEMBLY PRIOR TO DELIVERY TO THE SITE. SEE SPECIAL PROVISIONS.
8. ANY EXTERNAL BRACING AND/OR ADDITIONAL REINFORCING NECESSARY FOR ERECTION & HANDLING ARE TO BE DESIGNED BY THE CONTRACTOR.

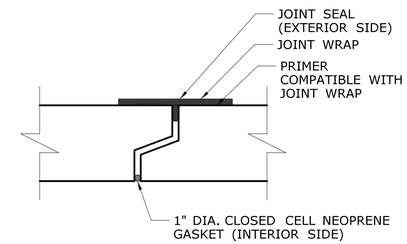

CULVERT JOINT DETAIL

SCALE: 1" = 1'-0"

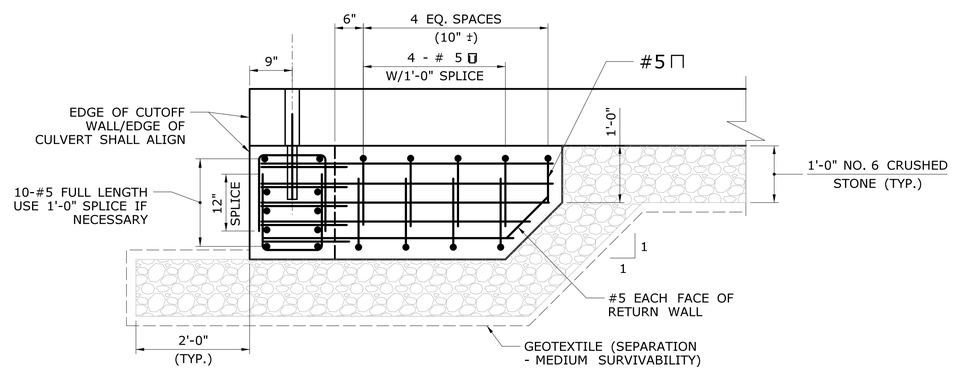

CUTOFF AND RETURN WALL DETAIL

SCALE: ¾" = 1'-0"

REV.	DATE	REVISION DESCRIPTION	SHEET NO.

THE INFORMATION, INCLUDING ESTIMATED QUANTITIES OF WORK, SHOWN ON THESE SHEETS IS BASED ON LIMITED INVESTIGATIONS BY THE STATE AND IS IN NO WAY WARRANTED TO INDICATE THE CONDITIONS OF ACTUAL QUANTITIES OF WORK WHICH WILL BE REQUIRED.

Plotted Date: 7/16/2019

DESIGNER/DRAFTER: PS
CHECKED BY: JG
SCALE AS NOTED

STATE OF CONNECTICUT
DEPARTMENT OF TRANSPORTATION

Filename: ...\SB_MSH_41_118_PCC Culvert Detail.dgn

SIGNATURE/BLOCK:

STATE OF CONNECTICUT JAGDEESH MEHTA LICENSED PROFESSIONAL ENGINEER No. 29887

GM2 ASSOCIATES, INC.
115 GLASTONBURY BLVD.
GLASTONBURY, CT 06033

PROJECT TITLE:
REPLACEMENT OF BRIDGE NO. 02018 ROUTE 66 OVER POCOTOPAUG CREEK

TOWN: **EAST HAMPTON**

DRAWING TITLE: **CULVERT DETAILS**

PROJECT NO. **041-118**
DRAWING NO. **STR-09**
SHEET NO. **04.09**

NOTE:

1. THE CONTRACTOR SHALL SUBMIT WORKING DRAWINGS FOR PRECAST CONCRETE CULVERT SEGMENTS, WINGWALLS, CUTOFF WALLS, RETURN WALLS, PARAPETS AND BARRIER WALLS AND ALL NECESSARY CONNECTIONS AND OTHER DETAILS.
2. THE PORTION OF SIDEWALK SHALL RECEIVE A MANDATORY CONSTRUCTION JOINT. THE COST FOR CONSTRUCTION OF SIDEWALK INCLUDING COLOR HARDENER AND IMPRINT SHALL BE PAID UNDER ITEM "BRIDGE SIDEWALK CONCRETE". THE DETAILS FOR COLOR HARDENING AND IMPRINT SHALL BE PERFOEMED IN ACCORDANCE WITH SPECIAL PROVISION "SPECIAL CONCRETE SIDEWALK".

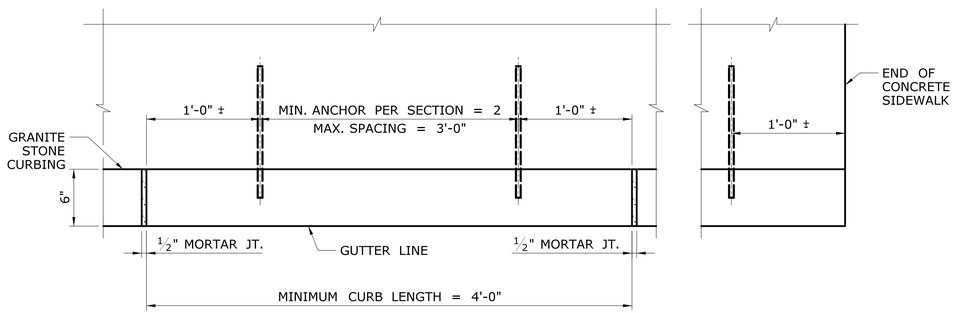

6" GRANITE STONE CURBING PLAN

SCALE: 1½" = 1'-0"

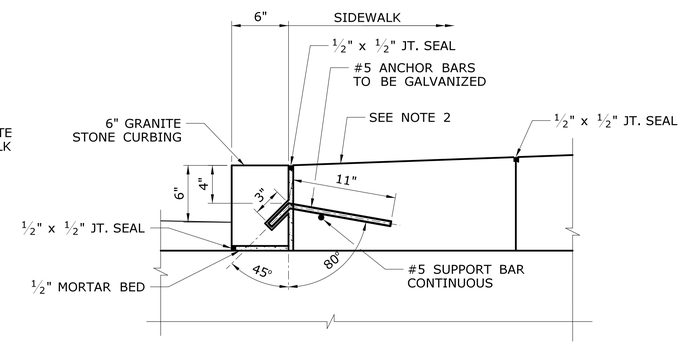

6" GRANITE STONE CURBING SECTION

SCALE: 1½" = 1'-0"

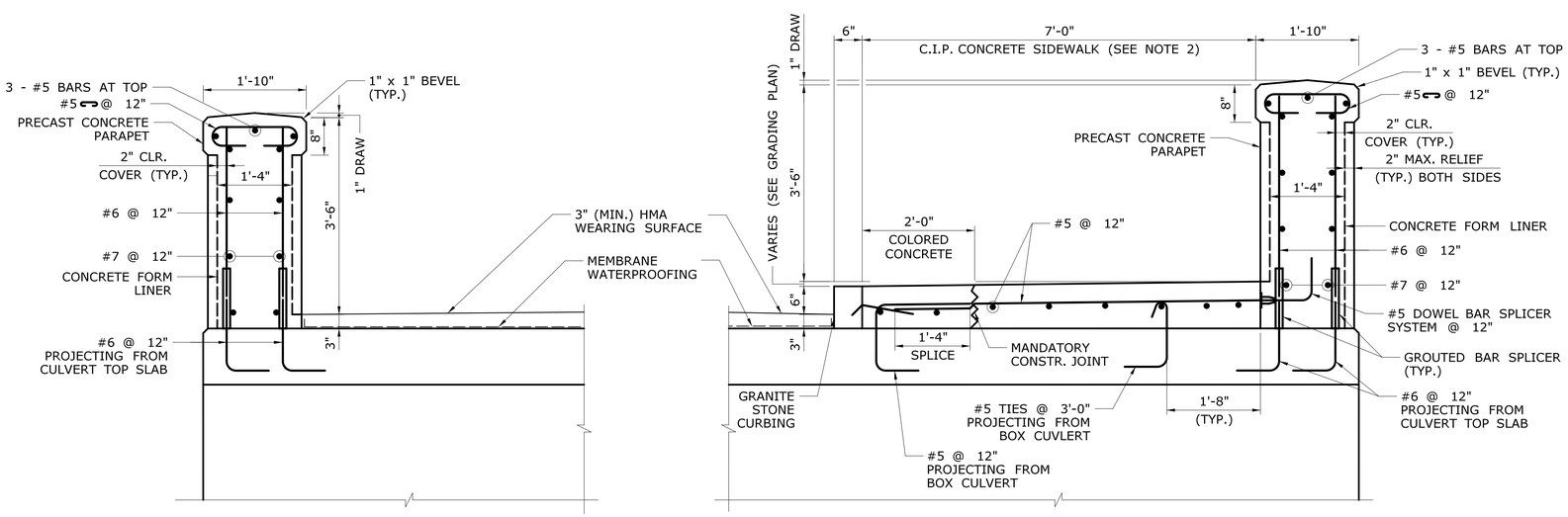

PARAPET & SIDEWALK DETAILS

SCALE: ¾" = 1'-0"

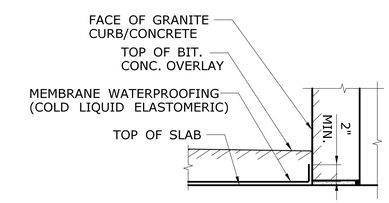

TREATMENT OF MEMBRANE WATERPROOFING AT GUTTER

NOT TO SCALE

REV.	DATE	REVISION DESCRIPTION	SHEET NO.

THE INFORMATION, INCLUDING ESTIMATED QUANTITIES OF WORK, SHOWN ON THESE SHEETS IS BASED ON LIMITED INVESTIGATIONS BY THE STATE AND IS IN NO WAY WARRANTED TO INDICATE THE CONDITIONS OF ACTUAL QUANTITIES OF WORK WHICH WILL BE REQUIRED.

Plotted Date: 7/16/2019

DESIGNER/DRAFTER: PS

CHECKED BY: JG

SCALE AS NOTED

STATE OF CONNECTICUT
DEPARTMENT OF TRANSPORTATION

Filename: ...\SB_MSH_41_118_Parapet and Sidewalk Detail.dgn

SIGNATURE/BLOCK:

GM2 ASSOCIATES, INC.
115 GLASTONBURY BLVD.
GLASTONBURY, CT 06033

PROJECT TITLE:

REPLACEMENT OF BRIDGE NO. 02018 ROUTE 66 OVER POCOTOPAUG CREEK

TOWN: **EAST HAMPTON**

DRAWING TITLE: **PARAPET AND CURB DETAILS**

PROJECT NO. **041-118**

DRAWING NO. **STR-10**

SHEET NO. **04.10**

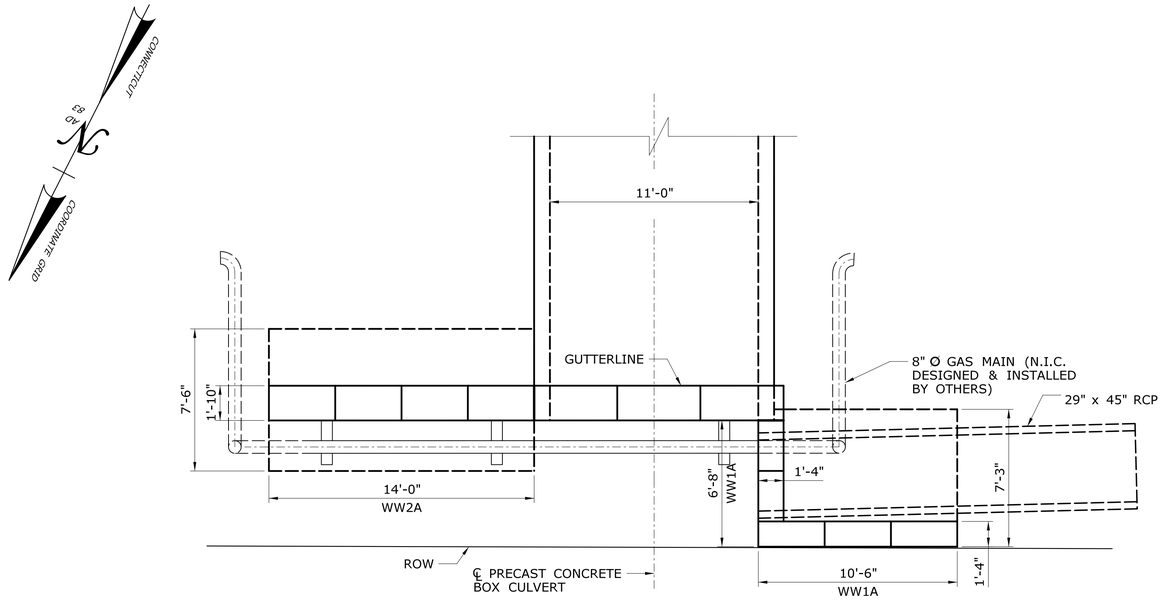

INLET PLAN
SCALE: ¼" = 1'-0"

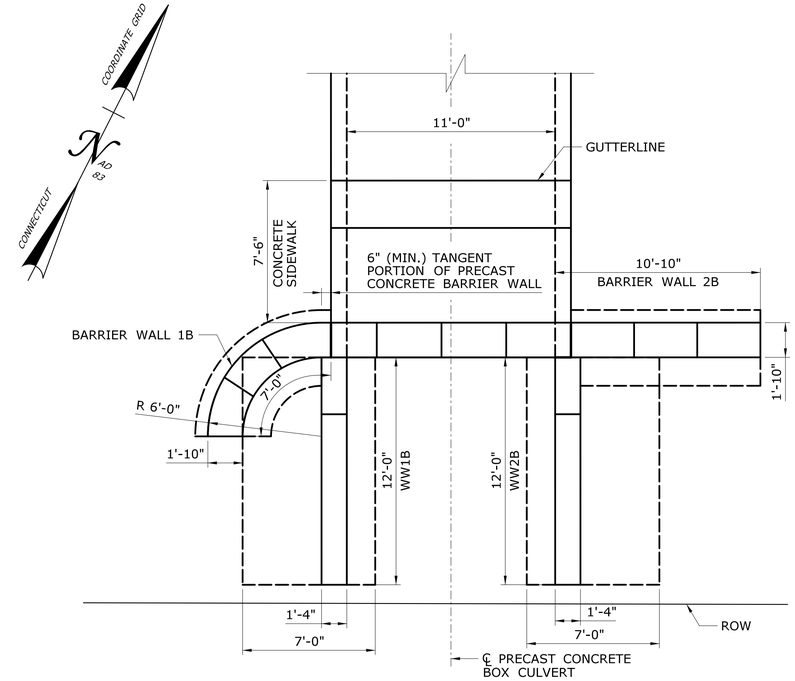

OUTLET PLAN
SCALE: ¼" = 1'-0"

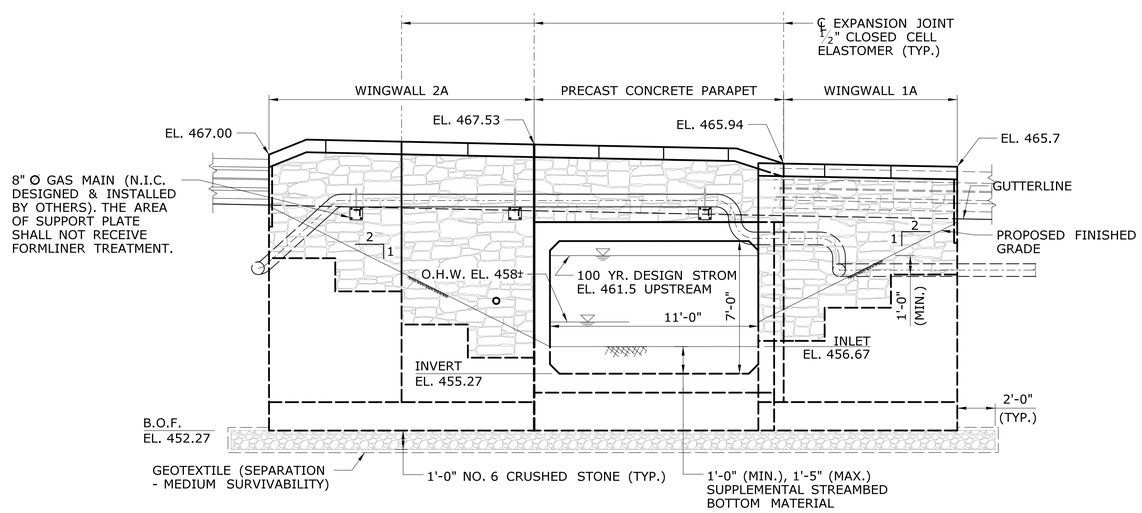

INLET ELEVATION
SCALE: ¼" = 1'-0"

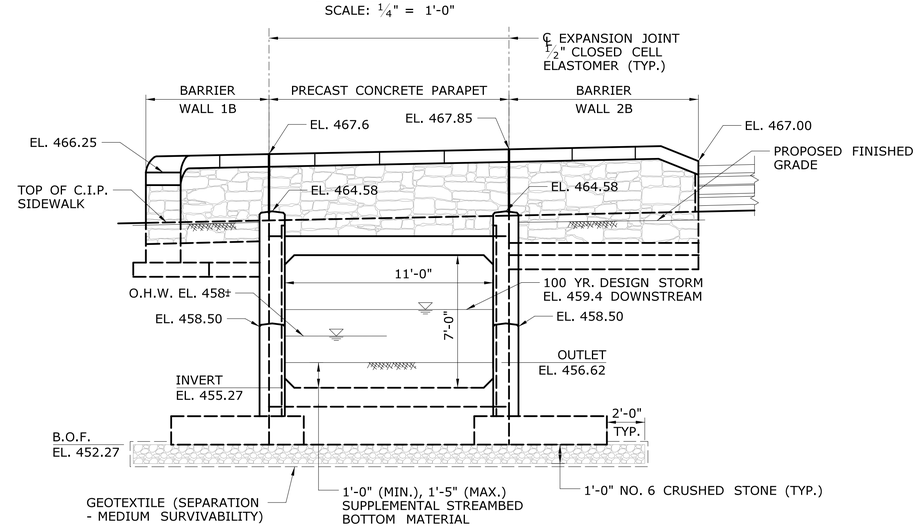

OUTLET ELEVATION
SCALE: ¼" = 1'-0"

GAS MAIN NOTES:

1. THE CONTRACTOR SHALL COORDINATE WITH GAS MAIN COMPANY TO DETERMINE SPACING, ATTACHMENT DETAIL REQUIREMENTS BEFORE MANUFACTURING THE PRECAST CONCRETE ELEMENTS.
2. GAS COMPANY TO DESIGN AND FURNISH SUPPORT BRACKETS AND PIPE ROLLERS FOR THE GAS MAIN. CONTRACTOR TO INSTALL SUPPORT BRACKETS AND PIPE ROLLERS. THE COST FOR INSTALLING THE BRACKETS AND PIPE ROLLERS SHALL BE INCLUDED UNDER GENERAL COST OF WORK.

REV.	DATE	REVISION DESCRIPTION	SHEET NO.

THE INFORMATION, INCLUDING ESTIMATED QUANTITIES OF WORK, SHOWN ON THESE SHEETS IS BASED ON LIMITED INVESTIGATIONS BY THE STATE AND IS IN NO WAY WARRANTED TO INDICATE THE CONDITIONS OF ACTUAL QUANTITIES OF WORK WHICH WILL BE REQUIRED.

Plotted Date: 7/16/2019

DESIGNER/DRAFTER: PS
CHECKED BY: LP
SCALE AS NOTED

STATE OF CONNECTICUT
DEPARTMENT OF TRANSPORTATION

Filename: ...\SB_MSH_41_118_Inlet & Outlet Plan & Elev.dgn

SIGNATURE/BLOCK:
GM2 ASSOCIATES, INC.
115 GLASTONBURY BLVD.
GLASTONBURY, CT 06033

PROJECT TITLE:
REPLACEMENT OF BRIDGE NO. 02018 ROUTE 66 OVER POCOTOPAUG CREEK

TOWN: **EAST HAMPTON**

DRAWING TITLE: **INLET AND OUTLET PLANS AND ELEVATIONS**

PROJECT NO. **041-118**
DRAWING NO. **STR-11**
SHEET NO. **04.11**

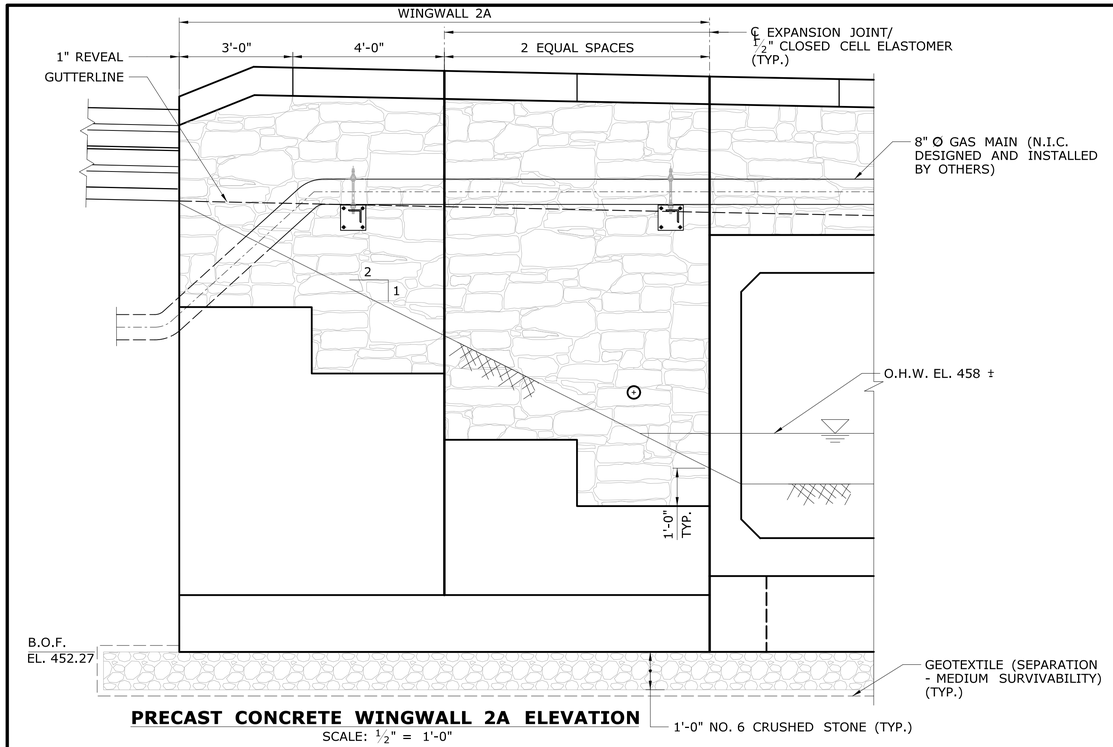

PRECAST CONCRETE WINGWALL 2A ELEVATION

SCALE: 1/2" = 1'-0"

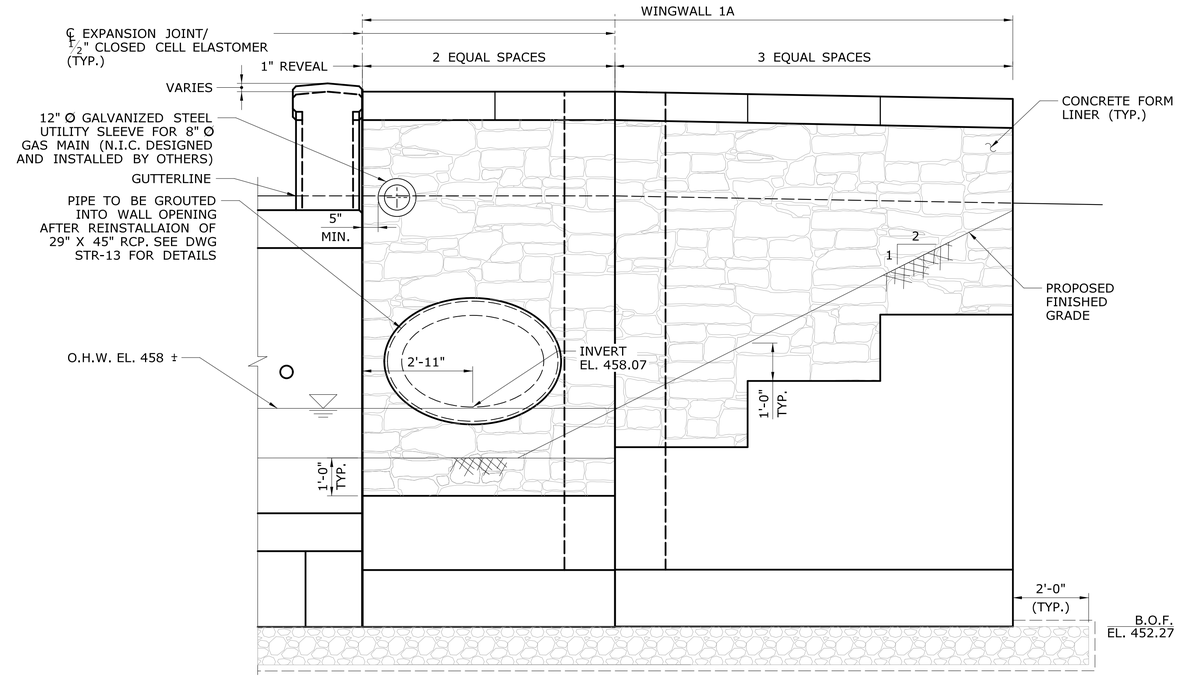

DEVELOPED ELEVATION OF PRECAST CONCRETE WINGWALL 1A

SCALE: 1/2" = 1'-0"

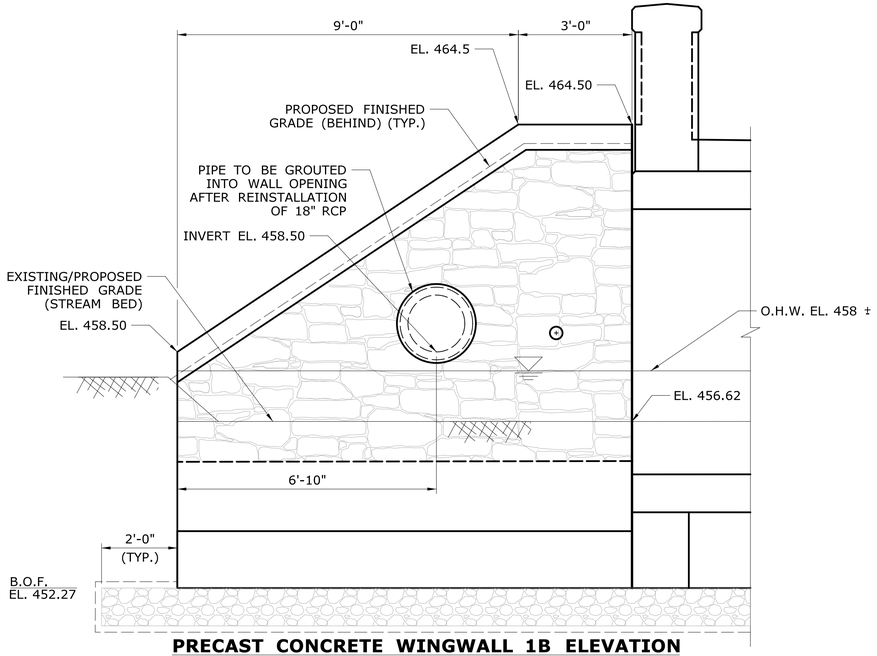

PRECAST CONCRETE WINGWALL 1B ELEVATION

SCALE: 1/2" = 1'-0"

NOTE:

1. THE CONTRACTOR SHALL COORDINATE WITH GAS MAIN COMPANY TO DETERMINE SPACING AND ATTACHMENT DETAIL REQUIREMENTS BEFORE MANUFACTURING THE PRECAST CONCRETE ELEMENT.
2. ACTUAL LOCATION AND ATTACHMENTS FOR GAS MAIN BRIDGE CROSSING TO BE DESIGNED BY OTHERS.

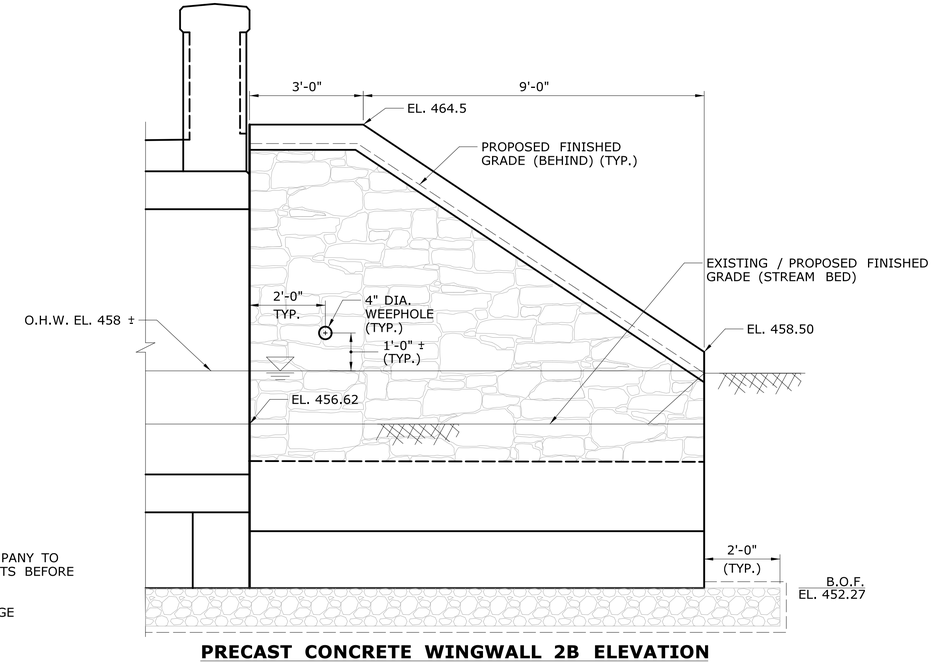

PRECAST CONCRETE WINGWALL 2B ELEVATION

SCALE: 1/2" = 1'-0"

REV.	DATE	REVISION DESCRIPTION	SHEET NO.

THE INFORMATION, INCLUDING ESTIMATED QUANTITIES OF WORK, SHOWN ON THESE SHEETS IS BASED ON LIMITED INVESTIGATIONS BY THE STATE AND IS IN NO WAY WARRANTED TO INDICATE THE CONDITIONS OF ACTUAL QUANTITIES OF WORK WHICH WILL BE REQUIRED.

Plotted Date: 7/16/2019

DESIGNER/DRAFTER: PJ

CHECKED BY: PS

SCALE AS NOTED

STATE OF CONNECTICUT
DEPARTMENT OF TRANSPORTATION

Filename: ..\SB_MSH_41_118_WW Elev.dgn

SIGNATURE/BLOCK:

GM2 ASSOCIATES, INC.
115 GLASTONBURY BLVD.
GLASTONBURY, CT 06033

PROJECT TITLE:

REPLACEMENT OF BRIDGE NO. 02018 ROUTE 66 OVER POCOTOPAUG CREEK

TOWN: **EAST HAMPTON**

DRAWING TITLE: **WINGWALL ELEVATIONS**

PROJECT NO. **041-118**

DRAWING NO. **STR-12**

SHEET NO. **04.12**

NOTE:

1. THE CONTRACTOR SHALL SUBMIT WORKING DRAWINGS FOR PRECAST CONCRETE CULVERT SEGMENTS, WINGWALLS, CUTOFF WALLS, RETURN WALLS, PARAPETS, BARRIER WALLS AND ALL NECESSARY CONNECTIONS AND OTHER DETAILS.
2. THE CONTRACTOR SHALL COORDINATE WITH GAS COMPANY TO DETERMINE SPACING AND ATTACHMENT DETAIL REQUIREMENTS BEFORE MANUFACTURING THE PRECAST CONCRETE ELEMENT.
3. ACTUAL LOCATION OF ATTACHMENTS FOR GAS MAIN SUPPORTS AT THE CULVERT AND WINGWALLS TO BE DESIGNED, FURNISHED AND INSTALLED BY OTHERS.

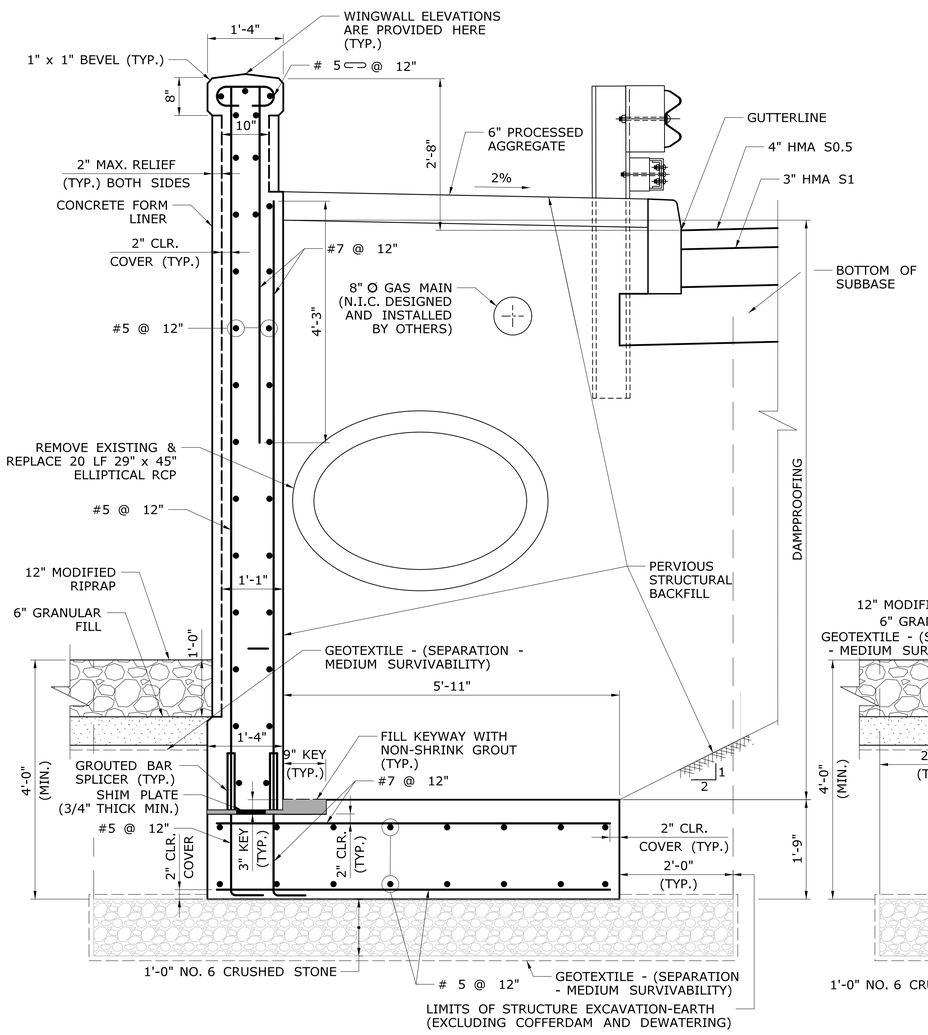

LIMIT STATE	UNIFORM FACTORED BEARING PRESSURE (ksf)
STRENGTH	4.14
SERVICE	2.87

TYPICAL PRECAST CONCRETE WINGWALL 1A SECTION

SCALE 3/4" = 1'-0"

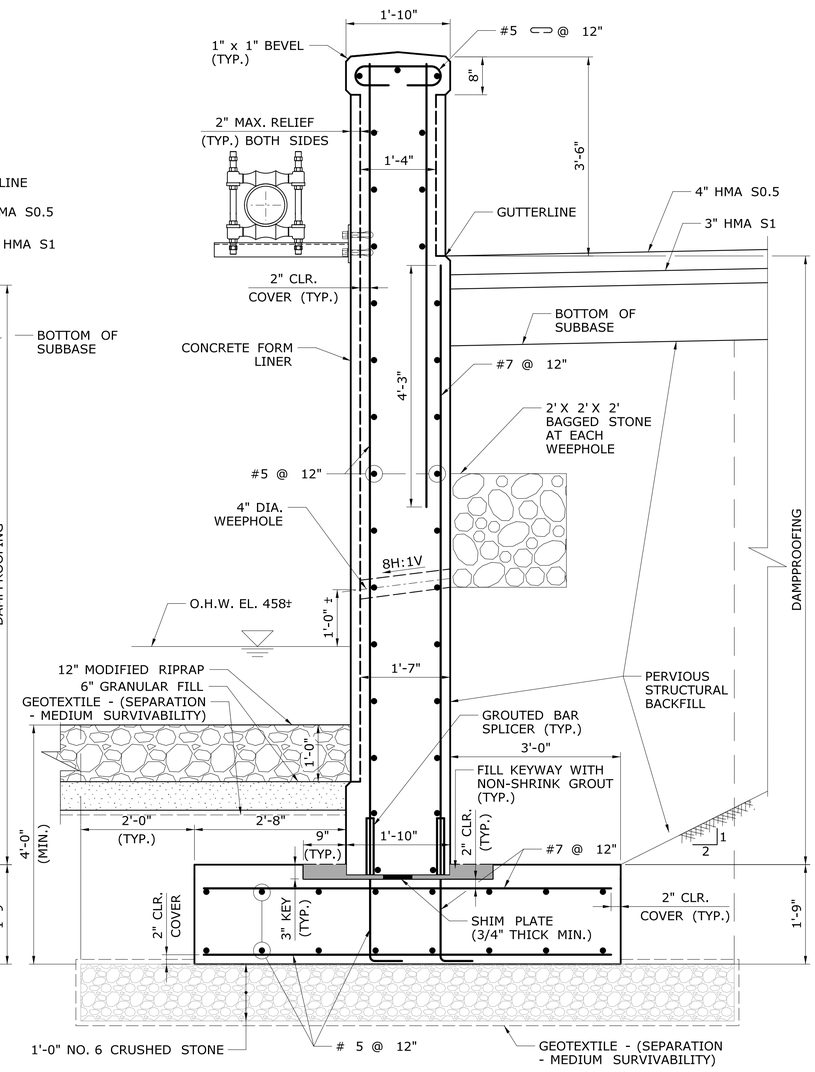

LIMIT STATE	UNIFORM FACTORED BEARING PRESSURE (ksf)
STRENGTH	2.85
SERVICE	1.94

TYPICAL PRECAST CONCRETE WINGWALL 2A SECTION

SCALE 3/4" = 1'-0"

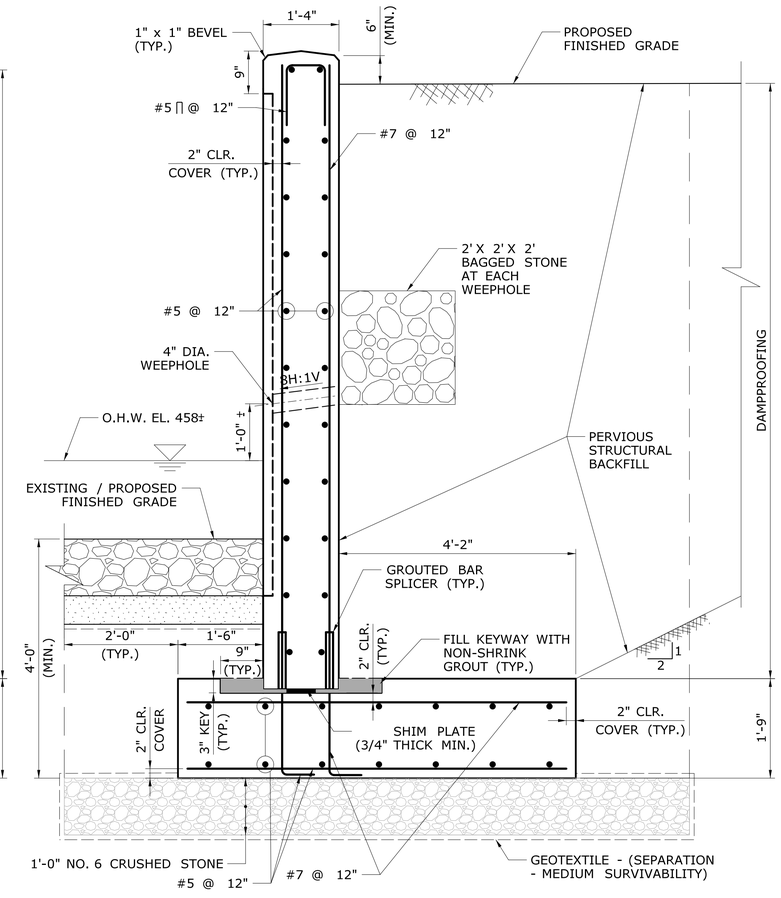

LIMIT STATE	UNIFORM FACTORED BEARING PRESSURE (ksf)
STRENGTH	2.90
SERVICE	2.02

TYPICAL PRECAST CONCRETE WINGWALL 1B & 2B SECTION

SCALE 3/4" = 1'-0"

REV.	DATE	REVISION DESCRIPTION	SHEET NO.

THE INFORMATION, INCLUDING ESTIMATED QUANTITIES OF WORK, SHOWN ON THESE SHEETS IS BASED ON LIMITED INVESTIGATIONS BY THE STATE AND IS IN NO WAY WARRANTED TO INDICATE THE CONDITIONS OF ACTUAL QUANTITIES OF WORK WHICH WILL BE REQUIRED.

Plotted Date: 7/16/2019

DESIGNER/DRAFTER: PJ
CHECKED BY: PS
SCALE AS NOTED

STATE OF CONNECTICUT
DEPARTMENT OF TRANSPORTATION

Filename: ...\SB_MSH_41_118_WW Section 1.dgn

SIGNATURE/BLOCK:

GM2 ASSOCIATES, INC.
115 GLASTONBURY BLVD.
GLASTONBURY, CT 06033

PROJECT TITLE:
REPLACEMENT OF BRIDGE NO. 02018 ROUTE 66 OVER POCOTOPAUG CREEK

TOWN: **EAST HAMPTON**

DRAWING TITLE: **WINGWALL & BARRIER WALL DETAILS - 1**

PROJECT NO. **041-118**
DRAWING NO. **STR-13**
SHEET NO. **04.13**

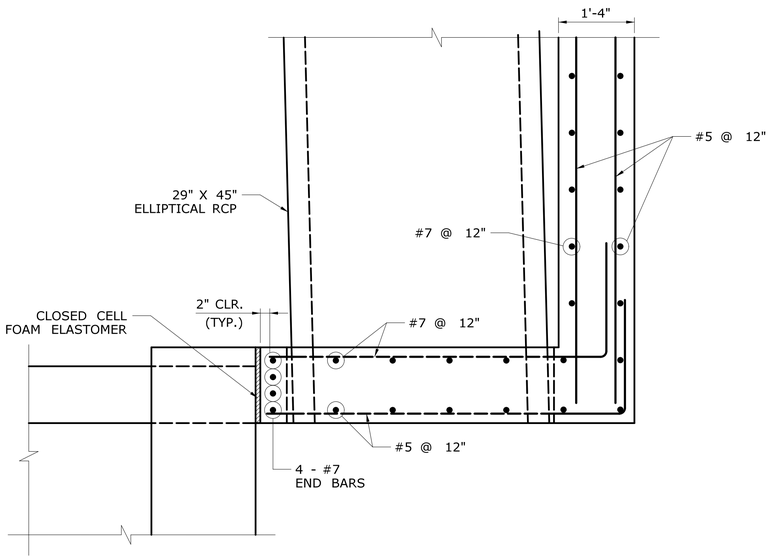

WINGWALL 1A DETAIL

SCALE 3/4" = 1'-0"

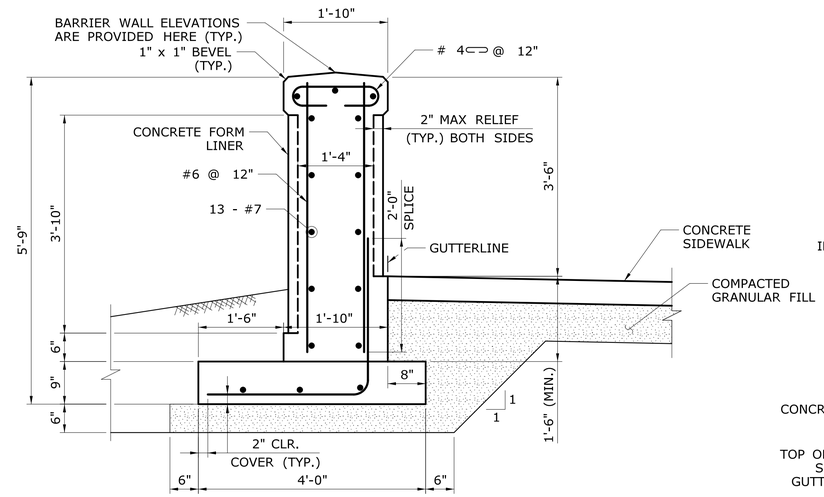

FOR BOTTOM OF FOOTING ELEVATIONS SEE DWG S-2

CONCRETE BARRIER WALL

SCALE 3/4" = 1'-0"

NOTES:

1. AT PARAPETS EACH W-BEAM TERMINAL CONNECTOR SHALL BE ANCHORED USING FOUR $\frac{7}{8}$" X 12" CHEMICALLY ANCHORED BOLTS WITH WASHERS OR AS DETAILED ON STRUCTURE SHEETS. MAXIMUM BOLT PROJECTION BEYOND THE NUT SHALL BE $\frac{1}{2}$". THE 12" MINIMUM LENGTH OF CHEMICALLY ANCHORED BOLTS SHALL INCLUDE A MINIMUM EMBEDMENT DEPTH OF 10" INTO SUITABLY REINFORCED CONCRETE OR AS RECOMMENDED BY THE MANUFACTURER OF BONDING MATERIAL.
2. THE CONTRACTOR SHALL COORDINATE THE DIMENSIONS OF THE SLEEVE WITH THE ACTUAL DIMENSION OF THE ELLIPTICAL PIPE TO ENSURE THAT THE PIPE WILL FIT WITHIN THE SLEEVE OPENING.
3. FOR ADDITIONAL NOTES ON STR-13.
4. ANY EXTERNAL BRACING AND/OR ADDITIONAL REINFORCING NECESSARY FOR ERECTION & HANDLING ARE TO BE DESIGNED BY THE CONTRACTOR.

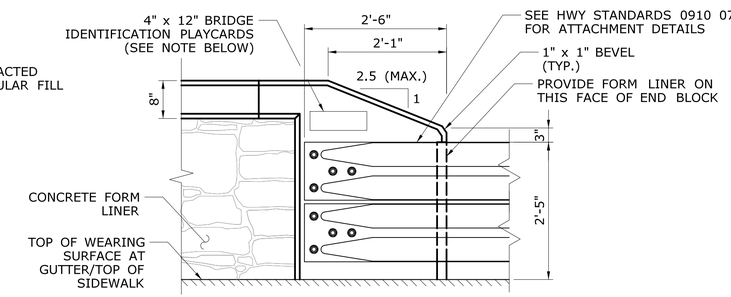

R-B 350 BRIDGE ATTACHMENT AT THE END OF PARAPET/BARRIER WALLS (ALL FOUR CORNERS)

SCALE 3/4" = 1'-0"

NOTE: THE CONTRACTOR SHALL PROVIDE AND INSTALL NEW BRIDGE IDENTIFICATION SIGNS AT THE LEADING END OF EACH BRIDGE PARAPET ON THE TRAFFIC SIDE. THE SIGNS SHALL BE FABRICATED WITH 40 GAUGE ALUMINUM SHEET METAL. THE SIGNS SHALL BE 4" X 12" WITH 3" WHITE RETROREFLECTIVE BLOCK LETTERS ON GREEN RETROREFELCTIVE SHEETING. EACH SIGN SHALL READ 02018. ALL COSTS ASSOCIATED WITH PROVIDING AND INSTALLING THE BRIDGE SIGNS SHALL BE COVERED UNDER ITEM #1208931- SIGN FACE SHEET ALIMINUM (TYPE IX RETROREFLECTIVE SHEETING).THE FINAL LOCATION AND ATTACHMENT METHOD FOR THE SIGNS SHALL BE APPROVED BY THE ENGINEER PRIOR TO ATTACHMENT.

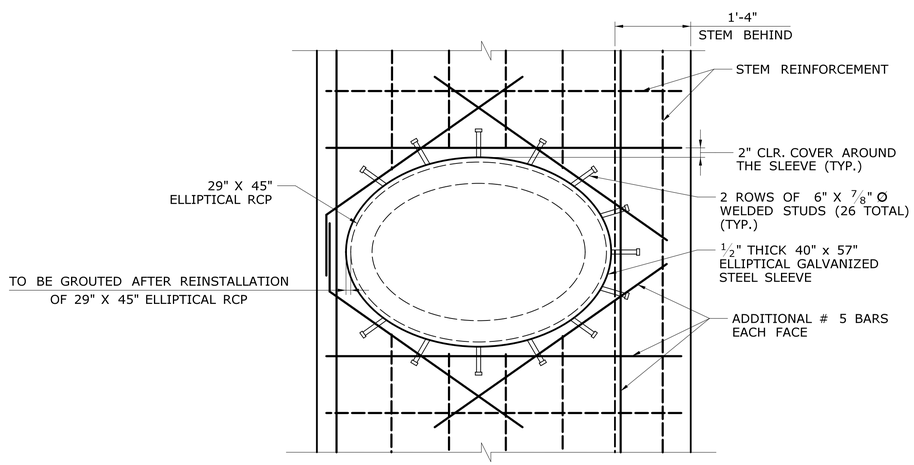

ELLIPTICAL RCP WALL DETAIL

SCALE 3/4" = 1'-0"

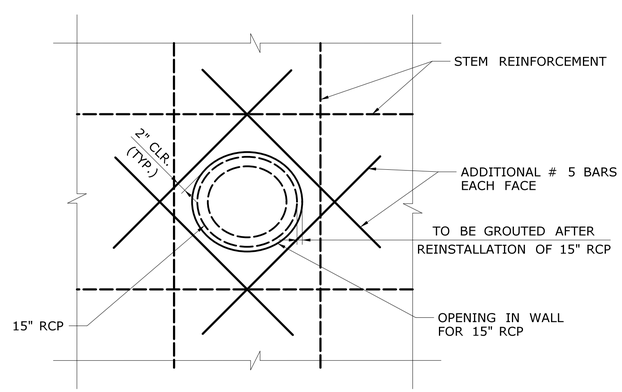

RCP WALL PENETRATION DETAIL

SCALE 3/4" = 1'-0"

REV.	DATE	REVISION DESCRIPTION	SHEET NO.

THE INFORMATION, INCLUDING ESTIMATED QUANTITIES OF WORK, SHOWN ON THESE SHEETS IS BASED ON LIMITED INVESTIGATIONS BY THE STATE AND IS IN NO WAY WARRANTED TO INDICATE THE CONDITIONS OF ACTUAL QUANTITIES OF WORK WHICH WILL BE REQUIRED.

Plotted Date: 7/16/2019

DESIGNER/DRAFTER: PJ

CHECKED BY: PS

SCALE AS NOTED

STATE OF CONNECTICUT
DEPARTMENT OF TRANSPORTATION

Filename: ...\SB_MSH_41_118_WW Section 2.dgn

SIGNATURE/BLOCK:

GM2 ASSOCIATES, INC.
115 GLASTONBURY BLVD.
GLASTONBURY, CT 06033

PROJECT TITLE:

REPLACEMENT OF BRIDGE NO. 02018 ROUTE 66 OVER POCOTOPAUG CREEK

TOWN: **EAST HAMPTON**

DRAWING TITLE: **WINGWALL & BARRIER WALL DETAILS - 2**

PROJECT NO. **041-118**

DRAWING NO. **STR-14**

SHEET NO. **04.14**