05 - STRUCTURAL
INDEX OF DRAWINGS

DRAWING NUMBER	DRAWING TITLE	DRAWING NUMBER	DRAWING TITLE
S-001	STRUCTURAL INDEX OF DRAWINGS		
S-002	ROOF OPENINGS DETAILS AND SECTIONS		
S-003	ROOF LADDER - 1		
S-004	ROOF LADDER - 2		
S-005	PARAPET REPAIR		

THE DESIGN APPEARS TO CONFORM TO APPLICABLE CRITERIA. APPROVAL IS NOT TO BE CONSTRUED TO MEAN THAT ALL ASPECTS OF THE DESIGN HAVE BEEN PERSONALLY CHECKED BY THE UNDERSIGNED.

Christopher J. Bonsignore, P.E.
2019.10.01 15:39:59-04'00'

TRANSPORTATION PRINCIPAL ENGINEER

REV.	DATE	REVISION DESCRIPTION	SHEET NO.

THE INFORMATION, INCLUDING ESTIMATED QUANTITIES OF WORK, SHOWN ON THESE SHEETS IS BASED ON LIMITED INVESTIGATIONS BY THE STATE AND IS IN NO WAY WARRANTED TO INDICATE THE CONDITIONS OF ACTUAL QUANTITIES OF WORK WHICH WILL BE REQUIRED.

Plotted Date: 9/13/2019

DESIGNER/DRAFTER: SKJ
CHECKED BY: RPL
SCALE AS NOTED

STATE OF CONNECTICUT
DEPARTMENT OF TRANSPORTATION

Filename: ...\FD_MST_STR_0164_0241_S001.dgn

SIGNATURE/BLOCK:
OFFICE OF ENGINEERING
APPROVED BY:

PROJECT TITLE:
THE ROOF REPLACEMENT OF THE MAINTENANCE FACILITY

TOWN: WINDSOR

DRAWING TITLE: STRUCTURAL INDEX OF DRAWINGS

PROJECT NO. 164-241
DRAWING NO. S-001
SHEET NO. 05.01

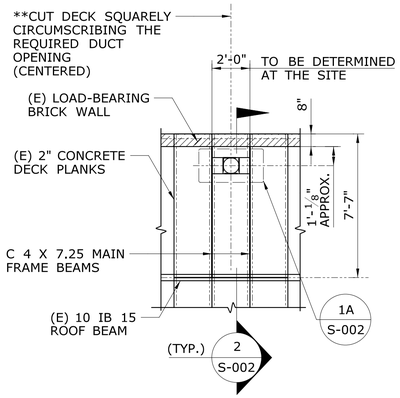

**THE CONTRACTOR SHALL REFER TO THE ARCHITECTURAL AND MECHANICAL DRAWINGS FOR THE EXACT SIZE AND LOCATION OF OPENING.

SCHEMATIC PLAN 1 S-002
SCALE: 1/4" = 1'-0"

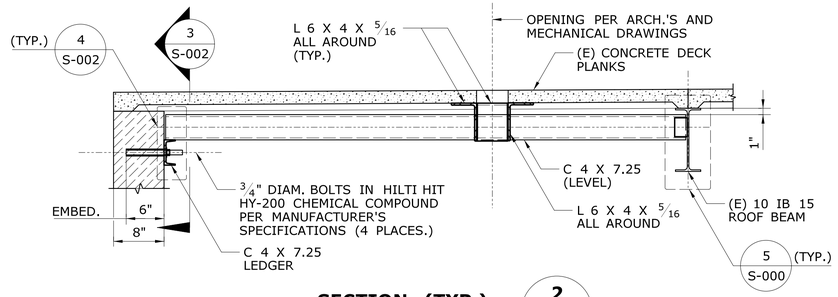

SECTION (TYP.) 2 S-002
SCALE: 1" = 1'-0"

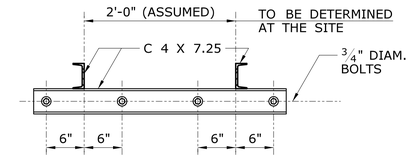

DETAIL 3 S-002
SCALE: 1" = 1'-0"

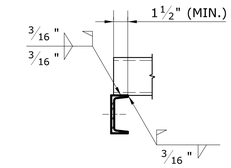

DETAIL (TYP.) 4 S-002
SCALE: 1 1/2" = 1'-0"

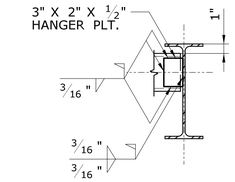

DETAIL (TYP.) 5 S-002
SCALE: 1 1/2" = 1'-0"

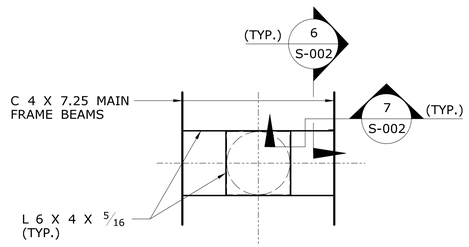

DETAIL 1A S-002
SCALE: 1" = 1'-0"

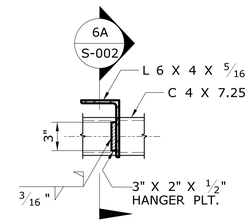

DETAIL (TYP.) 6 S-002
SCALE: 1 1/2" = 1'-0"

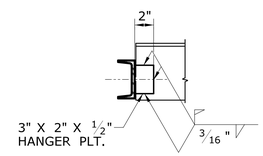

DETAIL (TYP.) 6A S-002
SCALE: 1 1/2" = 1'-0"

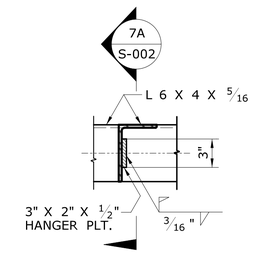

DETAIL (TYP.) 7 S-002
SCALE: 1 1/2" = 1'-0"

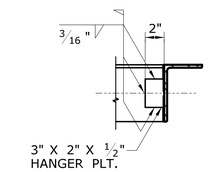

DETAIL (TYP.) 7A S-002
SCALE: 1 1/2" = 1'-0"

NOTES FOR PROPOSED BOILER CHIMNEY OPENING:

1. PLAN VIEW SHOWS SCHEMATIC LOCATIONS OF OPENING AND IS INTENDED FOR GENERAL REFERENCE ONLY. THE (E) CONCRETE DECK UNITS SHOULD BE SUPPORTED FULLY BY THE FRAMING AT THE OPENINGS. USE STEEL FILLER STRIPS 2"-WIDE (MIN.) TACK-WELDED ONTO THE FRAMING AS REQUIRED FOR A TIGHT FIT BEARING.
2. SIZE OF DECK OPENING SHALL BE DETERMINED AT THE SITE.
3. THE DETAILS SHOWN IN THIS SHEET SHALL BE USED ONLY FOR THE FRAMING OF OPENINGS THAT INVOLVE 1 DECK UNIT.
4. ALL FRAMING STEEL MUST CONFORM TO ASTM A992 50 KSI.
5. THE CONTRACTOR SHALL VERIFY ALL DIMENSIONS AND NOTIFY THE ENGINEER OF ANY DISCREPANCIES PRIOR TO START OF WORK.

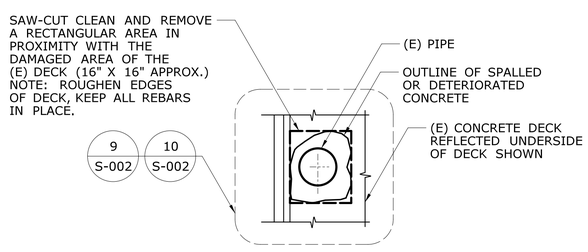

NOTES:

1. REFLECTED PLAN OF UNDERSIDE OF DECK SHOWN.
2. ACTUAL DIMENSION TO BE DETERMINDED AT THE SITE.

SCHEMATIC PLAN (E) CONDITION 8 S-002
SCALE: 1" = 1'-0"

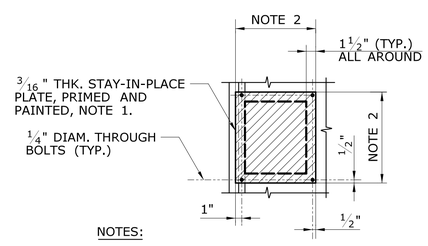

NOTES:

1. REFLECTED PLAN OF UNDERSIDE OF DECK SHOWN.
2. DIMENSION TO BE DETERMINDED AT THE SITE.

PLAN - FINAL CONDITION 9 S-002
SCALE: 1" = 1'-0"

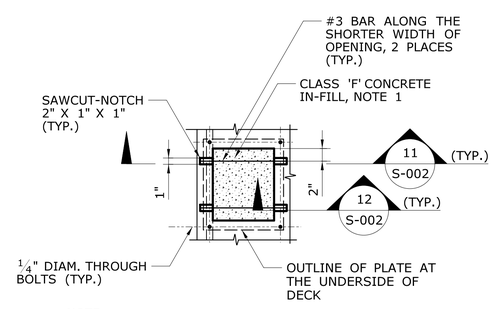

NOTE:

1. TOP VIEW OF DECK SHOWN.

PLAN - FINAL CONDITION 10 S-002
SCALE: 1" = 1'-0"

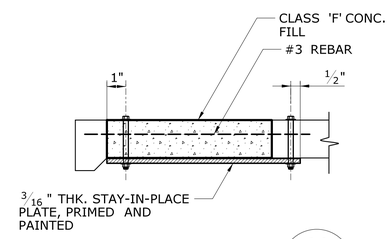

SECTION (TYP.) 11 S-002
SCALE: 3" = 1'-0"

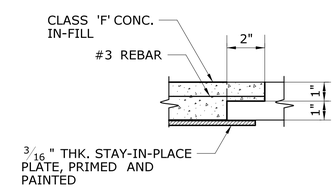

SECTION (TYP.) 12 S-002
SCALE: 3" = 1'-0"

REV.	DATE	REVISION DESCRIPTION	SHEET NO.

THE INFORMATION, INCLUDING ESTIMATED QUANTITIES OF WORK, SHOWN ON THESE SHEETS IS BASED ON LIMITED INVESTIGATIONS BY THE STATE AND IS IN NO WAY WARRANTED TO INDICATE THE CONDITIONS OF ACTUAL QUANTITIES OF WORK WHICH WILL BE REQUIRED.

Plotted Date: 9/13/2019

DESIGNER/DRAFTER: RPL/SKJ
CHECKED BY: RPL
SCALE AS NOTED

STATE OF CONNECTICUT
DEPARTMENT OF TRANSPORTATION

Filename: ...\FD_MST_STR_0164_0241_S002.dgn

SIGNATURE/BLOCK: OFFICE OF ENGINEERING
APPROVED BY:

PROJECT TITLE: THE ROOF REPLACEMENT OF THE MAINTENANCE FACILITY

TOWN: WINDSOR

DRAWING TITLE: ROOF OPENINGS DETAILS AND SECTIONS

PROJECT NO. 164-241
DRAWING NO. S-002
SHEET NO. 05.02

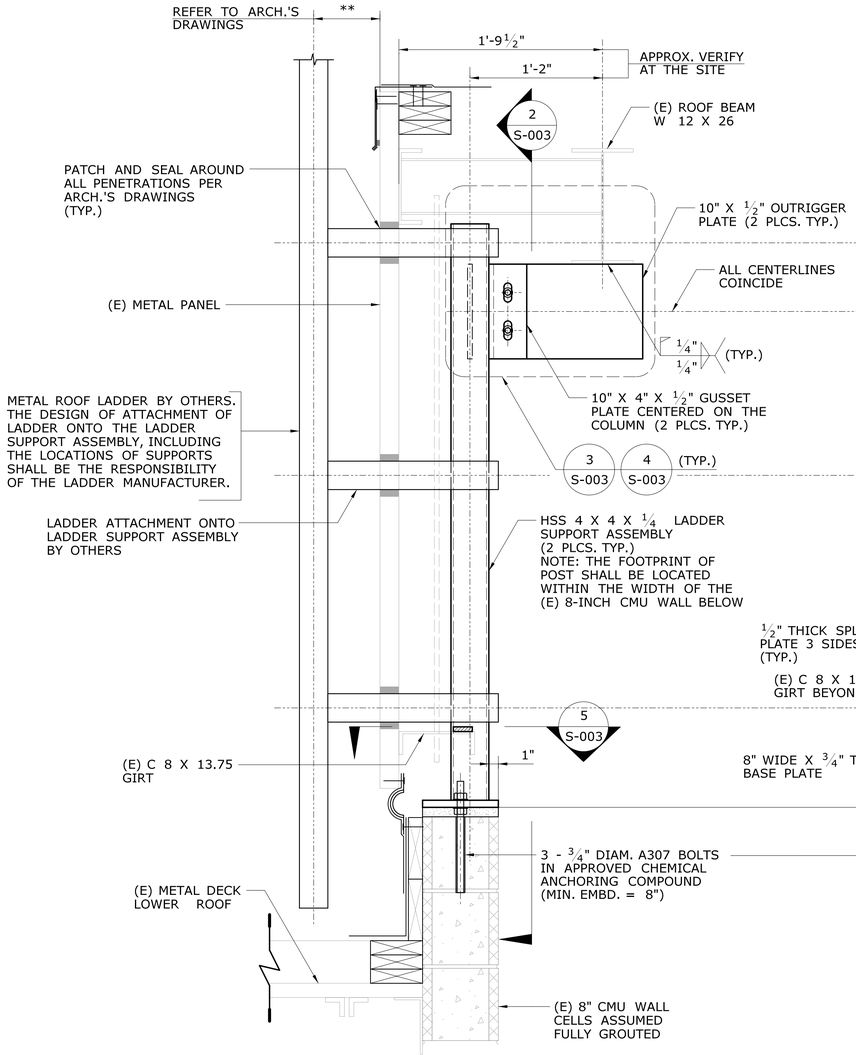

ROOF TRANSITION LADDER 1 S-003

SCALE: 1½" = 1'-0"

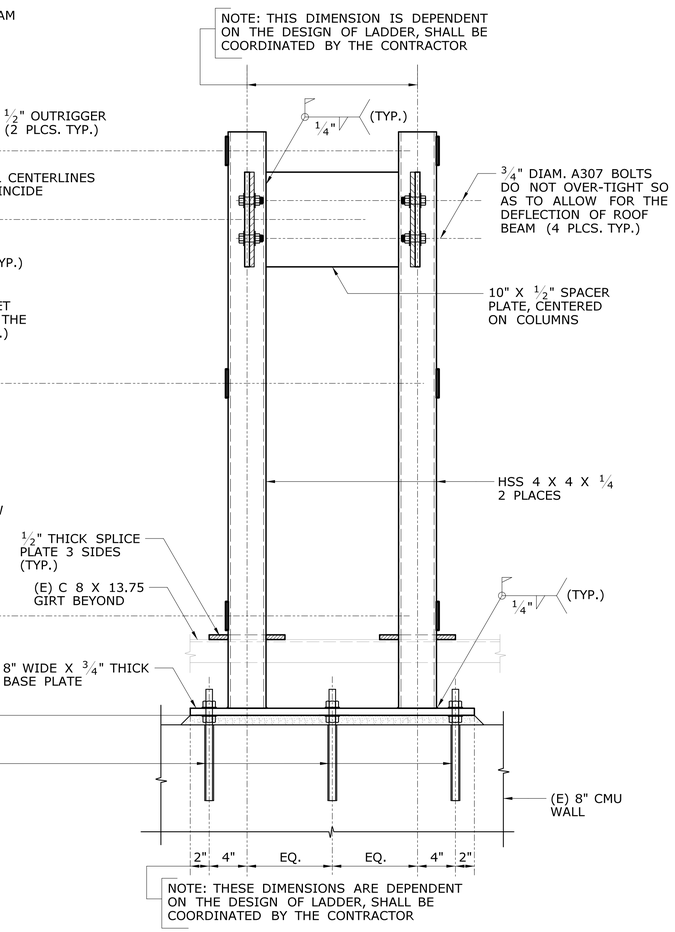

ELEVATION 2 S-003

SCALE: 1½" = 1'-0"

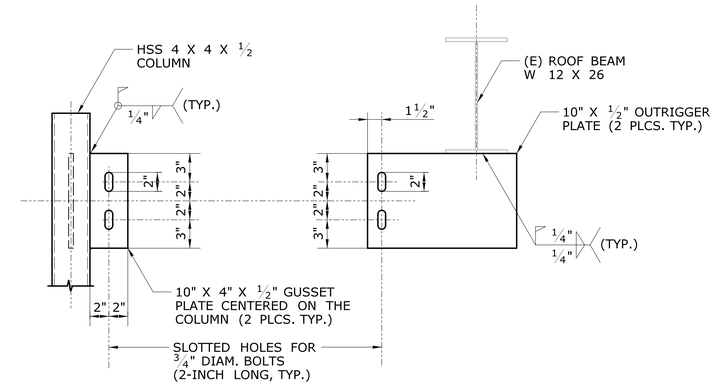

DETAIL 3 S-003

SCALE: 1½" = 1'-0"

DETAIL 4 S-003

SCALE: 1½" = 1'-0"

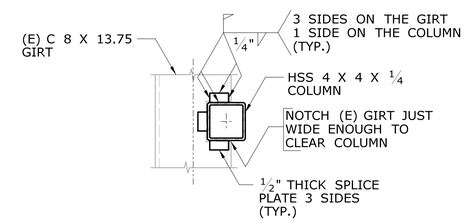

DETAIL 5 S-003

SCALE: 1½" = 1'-0"

REV.	DATE	REVISION DESCRIPTION	SHEET NO.

THE INFORMATION, INCLUDING ESTIMATED QUANTITIES OF WORK, SHOWN ON THESE SHEETS IS BASED ON LIMITED INVESTIGATIONS BY THE STATE AND IS IN NO WAY WARRANTED TO INDICATE THE CONDITIONS OF ACTUAL QUANTITIES OF WORK WHICH WILL BE REQUIRED.

Plotted Date: 9/13/2019

DESIGNER/DRAFTER: RPL

CHECKED BY: RPL

SCALE AS NOTED

STATE OF CONNECTICUT
DEPARTMENT OF TRANSPORTATION

Filename: ...\FD_MST_STR_0164_0241_S003.dgn

SIGNATURE/ BLOCK:

OFFICE OF ENGINEERING

APPROVED BY:

PROJECT TITLE:

THE ROOF REPLACEMENT OF THE MAINTENANCE FACILITY

TOWN: WINDSOR

DRAWING TITLE: ROOF LADDER - 1

PROJECT NO. 164-241

DRAWING NO. S-003

SHEET NO. 05.03

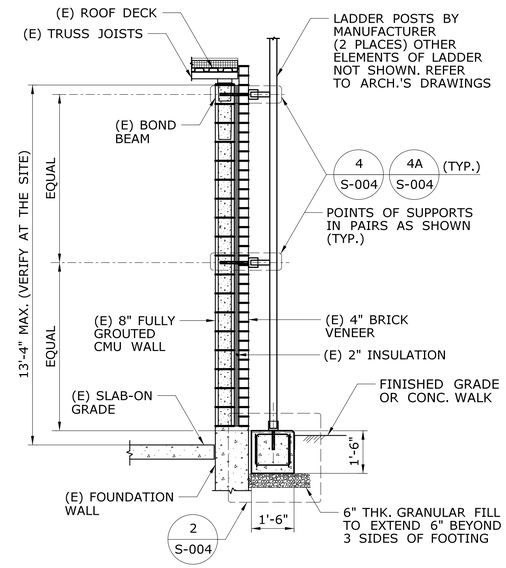

ELEVATION - CAGED LADDER (1 / S-004)
SCALE: 3/8" = 1'-0"

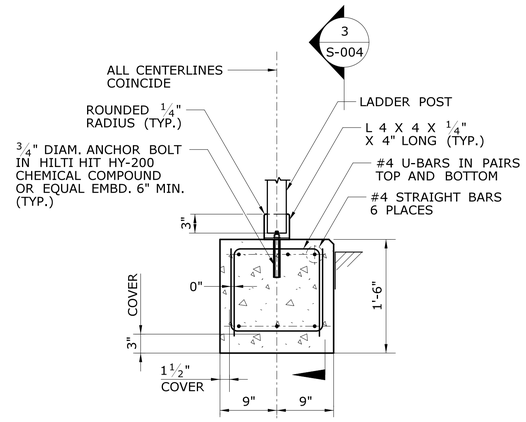

DETAIL (2 / S-004)
SCALE: 1" = 1'-0"

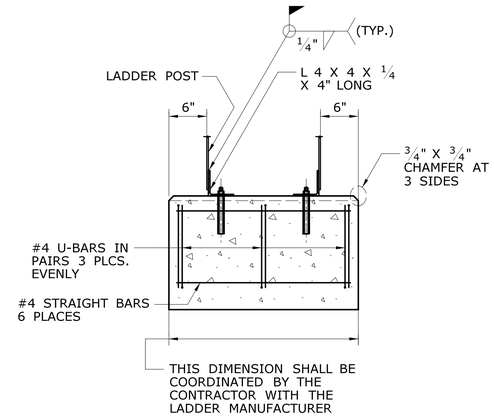

SECTION (3 / S-004)
SCALE: 1" = 1'-0"

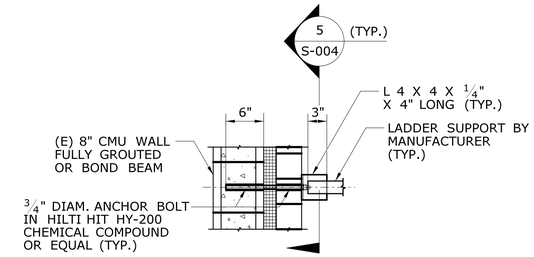

DETAIL (TYP.) (4 / S-004)
SCALE: 1" = 1'-0"

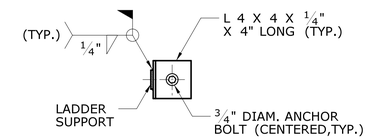

SECTION (TYP.) (5 / S-004)
SCALE: 1 1/2" = 1'-0"

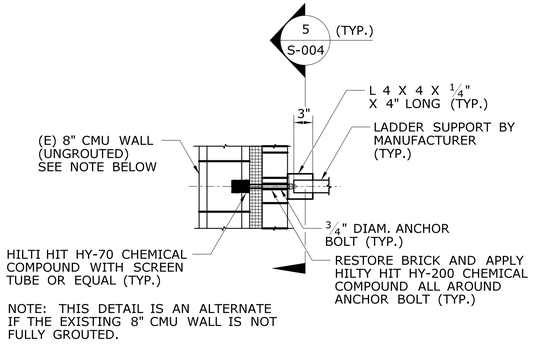

NOTE: THIS DETAIL IS AN ALTERNATE IF THE EXISTING 8" CMU WALL IS NOT FULLY GROUTED.

DETAIL (TYP.) (4A / S-004)
SCALE: 1" = 1'-0"

GENERAL NOTES:

1. ALL STRUCTURAL STEEL ANGLES AND PLATES SHALL BE A36 STEEL AND HOT-DIP GALVANIZED AT THE SHOP. WELDING SHALL BE PERFORMED IN ACCORDANCE WITH THE REQUIREMENTS OF AWS D1.1, USING E7018 ELECTRODES.

2. ANCHOR BOLTS SHALL BE A307 STAINLESS STEEL. NUTS AND WASHERS SHALL BE STAINLESS STEEL.

3. THE CONTRACTOR SHALL COORDINATE WITH THE LADDER MANUFACTURER FOR THE DIMENSIONING COMPATIBILITY WITH THE EXISTING STRUCTURE.

4. CONCRETE SHALL BE NORMAL-WEIGHT AND SHALL HAVE A MINIMUM 28-DAY COMPRESSIVE STRENGTH OF 4,000 PSI.

5. REINFORCING BARS SHALL BE DEFORMED BILLET STEEL CONFORMING TO ASTM A615, GRADE 60.

6. ALL DRAWINGS IN THIS SHEET HAVE BEEN BASED FROM THE ORIGINAL DRAWINGS OF THE STRUCTURE. ALL DIMENSIONS SHALL BE VERIFIED AT THE SITE BY THE CONTRACTOR PRIOR TO THE MANUFACTURE OF THE LADDER AND CONSTRUCTION.

7. THE CHEMICAL COMPOUND ANCHORING SYSTEM SHOWN IN THESE DRAWINGS IS TO BE CONSTRUED ONLY AS A BASIS FOR DESIGN. THE CONTRACTOR MAY SUBMIT TO THE ENGINEER EQUIVALENT PRODUCT AND SYSTEM, INCLUDING THE PRODUCT'S SPECIFICATIONS FOR REVIEW AND APPROVAL. THE PRODUCT SHALL BE APPLIED IN CONFORMITY WITH THE SPECIFICATIONS OF THE MANUFACTURER.

REV.	DATE	REVISION DESCRIPTION	SHEET NO.

THE INFORMATION, INCLUDING ESTIMATED QUANTITIES OF WORK, SHOWN ON THESE SHEETS IS BASED ON LIMITED INVESTIGATIONS BY THE STATE AND IS IN NO WAY WARRANTED TO INDICATE THE CONDITIONS OF ACTUAL QUANTITIES OF WORK WHICH WILL BE REQUIRED.

Plotted Date: 9/13/2019

DESIGNER/DRAFTER: SKJ/RPL
CHECKED BY: RPL
SCALE AS NOTED

STATE OF CONNECTICUT
DEPARTMENT OF TRANSPORTATION

Filename: ...\FD_MST_STR_0164_0241_S004.dgn

SIGNATURE/BLOCK:
OFFICE OF ENGINEERING
APPROVED BY:

PROJECT TITLE:
THE ROOF REPLACEMENT OF THE MAINTENANCE FACILITY

TOWN: WINDSOR
DRAWING TITLE: ROOF LADDER - 2

PROJECT NO. 164-241
DRAWING NO. S-004
SHEET NO. 05.04

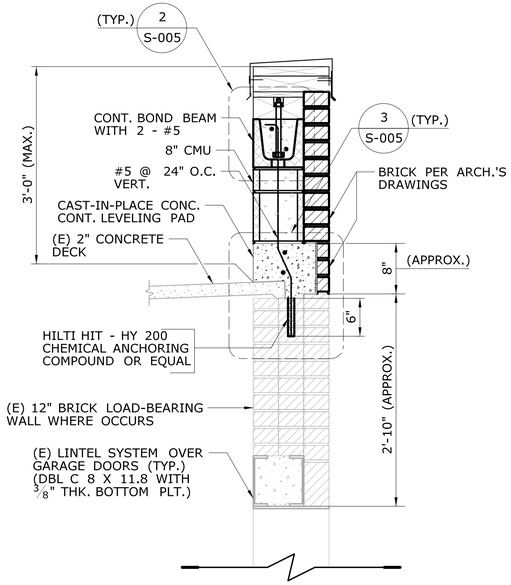

SECTION (TYP.) 1 / S-005
SCALE: 1" = 1'-0"

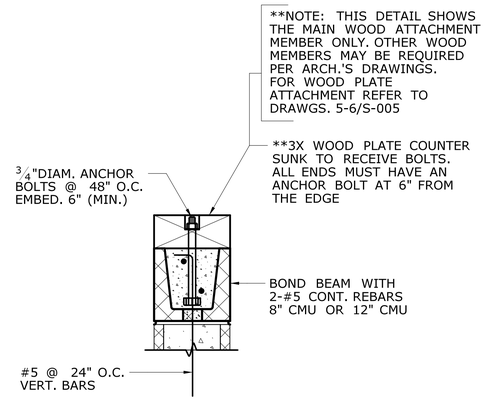

DETAIL (TYP.) 2 / S-005
SCALE: 1 1/2" = 1'-0"

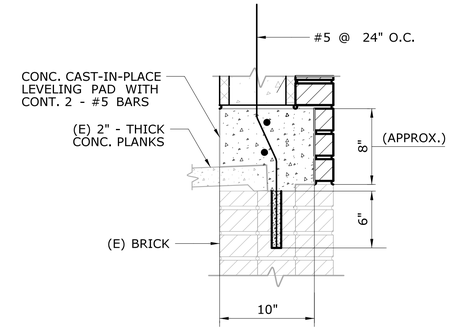

DETAIL (TYP.) 3 / S-005
SCALE: 1 1/2" = 1'-0"

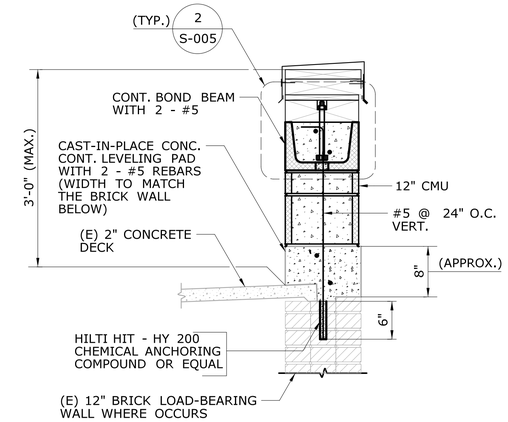

SECTION (TYP.) 4 / S-005

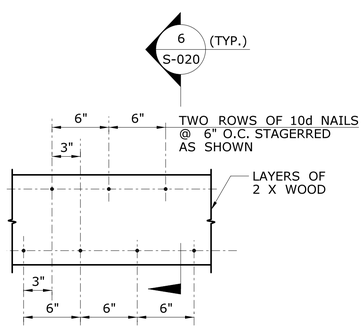

PLAN - WOOD BLOCK NAILING (TYP.) 5 / S-005

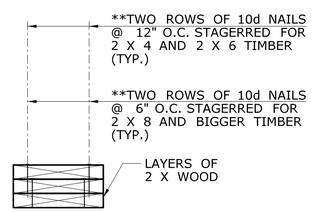

**NOTE: THIS NAILING PATTERN SHALL BE TYPICAL FOR ALL MULTI-LAYERED 1 1/2" THK. TIMBER COMPOSITION.

SECTION (TYP.) 6 / S-005

REV.	DATE	REVISION DESCRIPTION	SHEET NO.

THE INFORMATION, INCLUDING ESTIMATED QUANTITIES OF WORK, SHOWN ON THESE SHEETS IS BASED ON LIMITED INVESTIGATIONS BY THE STATE AND IS IN NO WAY WARRANTED TO INDICATE THE CONDITIONS OF ACTUAL QUANTITIES OF WORK WHICH WILL BE REQUIRED.

Plotted Date: 9/30/2019

DESIGNER/DRAFTER: RPL
CHECKED BY: RPL
SCALE AS NOTED

STATE OF CONNECTICUT
DEPARTMENT OF TRANSPORTATION

Filename: ...\FD_MST_STR_0164_0241_S005.dgn

SIGNATURE/ BLOCK:
OFFICE OF ENGINEERING
APPROVED BY:

PROJECT TITLE:
THE ROOF REPLACEMENT OF THE MAINTENANCE FACILITY

TOWN: WINDSOR
DRAWING TITLE: PARAPET REPAIR

PROJECT NO. 164-241
DRAWING NO. S-005
SHEET NO. 05.05