04 - CIVIL
INDEX OF DRAWINGS

DRAWING NUMBER	DRAWING TITLE	DRAWING NUMBER	DRAWING TITLE
C-001	INDEX OF DRAWINGS		
C-002	DEMOMITION PLAN (NORWICH)		
C-003	SITE, GRADING, AND UTILITY PLAN (NORWICH)		
C-004	PAVEMENT PLAN (NORWICH)		
C-005	MOTOR FUEL ISLAND PLAN (NORWICH)		
C-006	MOTOR FUEL TANK DETAILS (NORWICH)		
C-007	SITE AND DEMOLITION PLAN (EAST LYME)		
C-008	WASTE WATER HOLDING TANK (NORWICH)		
C-009	MISCELLANEOUS DETAILS		

THE DESIGN APPEARS TO CONFORM TO APPLICABLE CRITERIA. APPROVAL IS NOT TO BE CONSTRUED TO MEAN THAT ALL ASPECTS OF THE DESIGN HAVE BEEN PERSONALLY CHECKED BY THE UNDERSIGNED.

Christopher J. Bonsignore, P.E.
2019.09.16 12:54:13-04'00'

TRANSPORTATION PRINCIPAL ENGINEER

REV.	DATE	REVISION DESCRIPTION	SHEET NO.

THE INFORMATION, INCLUDING ESTIMATED QUANTITIES OF WORK, SHOWN ON THESE SHEETS IS BASED ON LIMITED INVESTIGATIONS BY THE STATE AND IS IN NO WAY WARRANTED TO INDICATE THE CONDITIONS OF ACTUAL QUANTITIES OF WORK WHICH WILL BE REQUIRED.

Plotted Date: 9/16/2019

DESIGNER/DRAFTER: ME

CHECKED BY: ME

STATE OF CONNECTICUT
DEPARTMENT OF TRANSPORTATION

Filename: ...\Facilities\Civil\C-001.dgn

SIGNATURE/ BLOCK:

OFFICE OF ENGINEERING

APPROVED BY:

PROJECT TITLE:

EAST LYME P&FS FACILITY AND NORWICH DAS GARAGE TANK REPLACEMENT

TOWN: NORWICH EAST LYME

DRAWING TITLE: INDEX OF DRAWINGS

PROJECT NO. 172-466

DRAWING NO. C-001

SHEET NO. 04.01

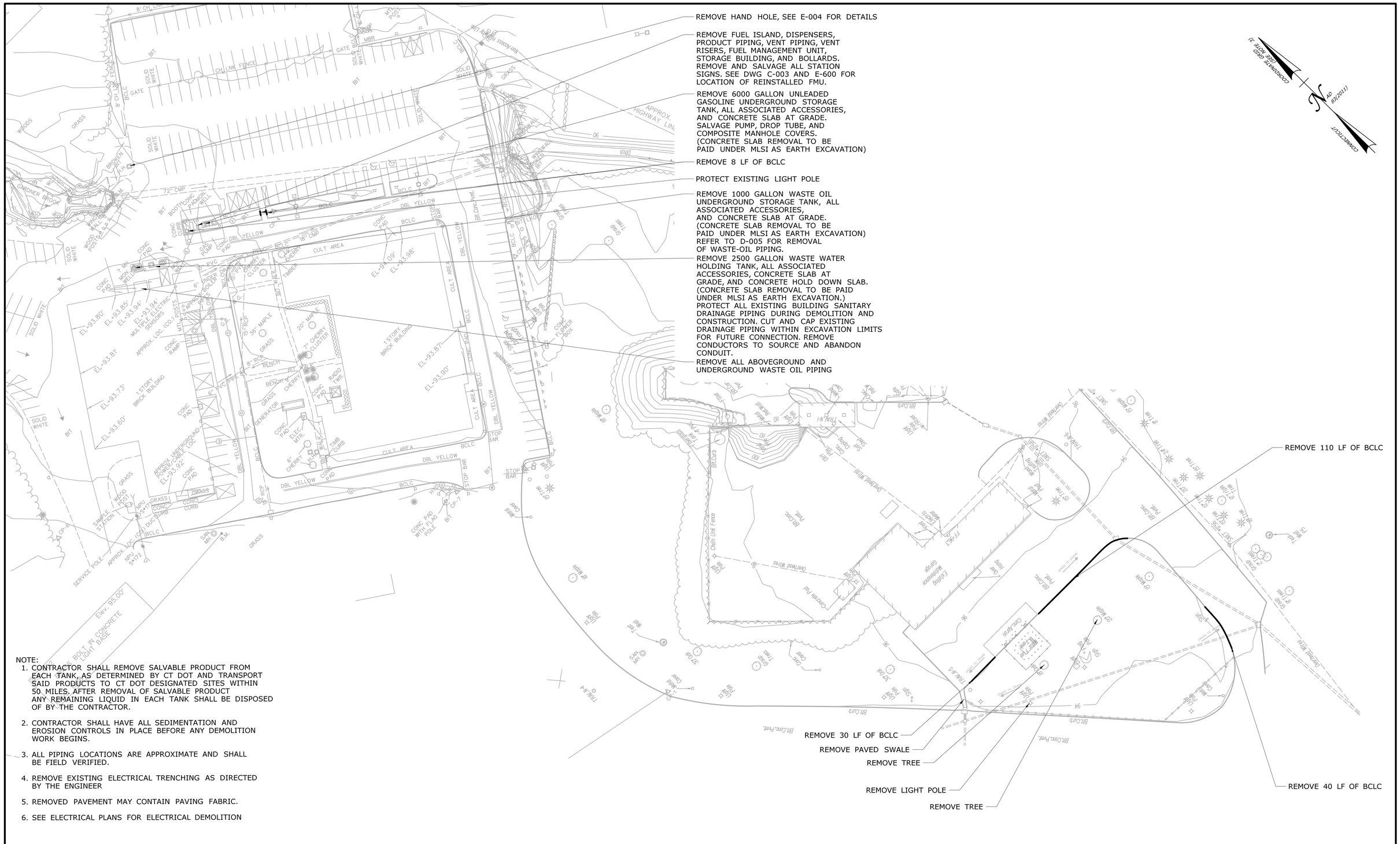
REMOVE HAND HOLE, SEE E-004 FOR DETAILS
REMOVE FUEL ISLAND, DISPENSERS, PRODUCT PIPING, VENT PIPING, VENT RISERS, FUEL MANAGEMENT UNIT, STORAGE BUILDING, AND BOLLARDS. REMOVE AND SALVAGE ALL STATION SIGNS. SEE DWG C-003 AND E-600 FOR LOCATION OF REINSTALLED FMU.
REMOVE 6000 GALLON UNLEADED GASOLINE UNDERGROUND STORAGE TANK, ALL ASSOCIATED ACCESSORIES, AND CONCRETE SLAB AT GRADE. SALVAGE PUMP, DROP TUBE, AND COMPOSITE MANHOLE COVERS. (CONCRETE SLAB REMOVAL TO BE PAID UNDER MLSI AS EARTH EXCAVATION)
REMOVE 8 LF OF BCLC
PROTECT EXISTING LIGHT POLE
REMOVE 1000 GALLON WASTE OIL UNDERGROUND STORAGE TANK, ALL ASSOCIATED ACCESSORIES, AND CONCRETE SLAB AT GRADE. (CONCRETE SLAB REMOVAL TO BE PAID UNDER MLSI AS EARTH EXCAVATION) REFER TO D-005 FOR REMOVAL OF WASTE-OIL PIPING.
REMOVE 2500 GALLON WASTE WATER HOLDING TANK, ALL ASSOCIATED ACCESSORIES, CONCRETE SLAB AT GRADE, AND CONCRETE HOLD DOWN SLAB. (CONCRETE SLAB REMOVAL TO BE PAID UNDER MLSI AS EARTH EXCAVATION.) PROTECT ALL EXISTING BUILDING SANITARY DRAINAGE PIPING DURING DEMOLITION AND CONSTRUCTION. CUT AND CAP EXISTING DRAINAGE PIPING WITHIN EXCAVATION LIMITS FOR FUTURE CONNECTION. REMOVE CONDUCTORS TO SOURCE AND ABANDON CONDUIT.
REMOVE ALL ABOVEGROUND AND UNDERGROUND WASTE OIL PIPING
REMOVE 110 LF OF BCLC
REMOVE 30 LF OF BCLC
REMOVE PAVED SWALE
REMOVE TREE
REMOVE LIGHT POLE
REMOVE TREE
REMOVE 40 LF OF BCLC
CONNECTICUT
COORDINATE GRID NOTE
NAD 83(2011)
1 STORY BRICK BUILDING
Elev. 95.00'
Existing Mainstore Canopy
Concrete Pad
Chain Link Fence
Overhead Wires
Concrete Road
Bit.Conc. Pvmt.
Bit.Curb
Grass
Trees
Shrubs
Light Pole
Sign
Fed Wall
Mail Chute
Stop Bar
Dbl. Yellow
Bollard
Fire Hydrant
Gate Valve
Drop Inlet
Catch Basin
Manhole
Guard Rail
Bituminous Curb
Conc. Apron
Conc. Pad
Conc. Curb
Bit. Curb
Bit. Conc. Pvmt.
Wood Post
Wood Fence
Chain Link Fence
Stone Wall
Retaining Wall
Ditch
Brook
Woods
Bollard
Sample Station
Service Pole
Light Base
Elev. 95.00'
Concrete Pad
Bit. Curb
Bit. Conc. Pvmt.
Overhead Wires

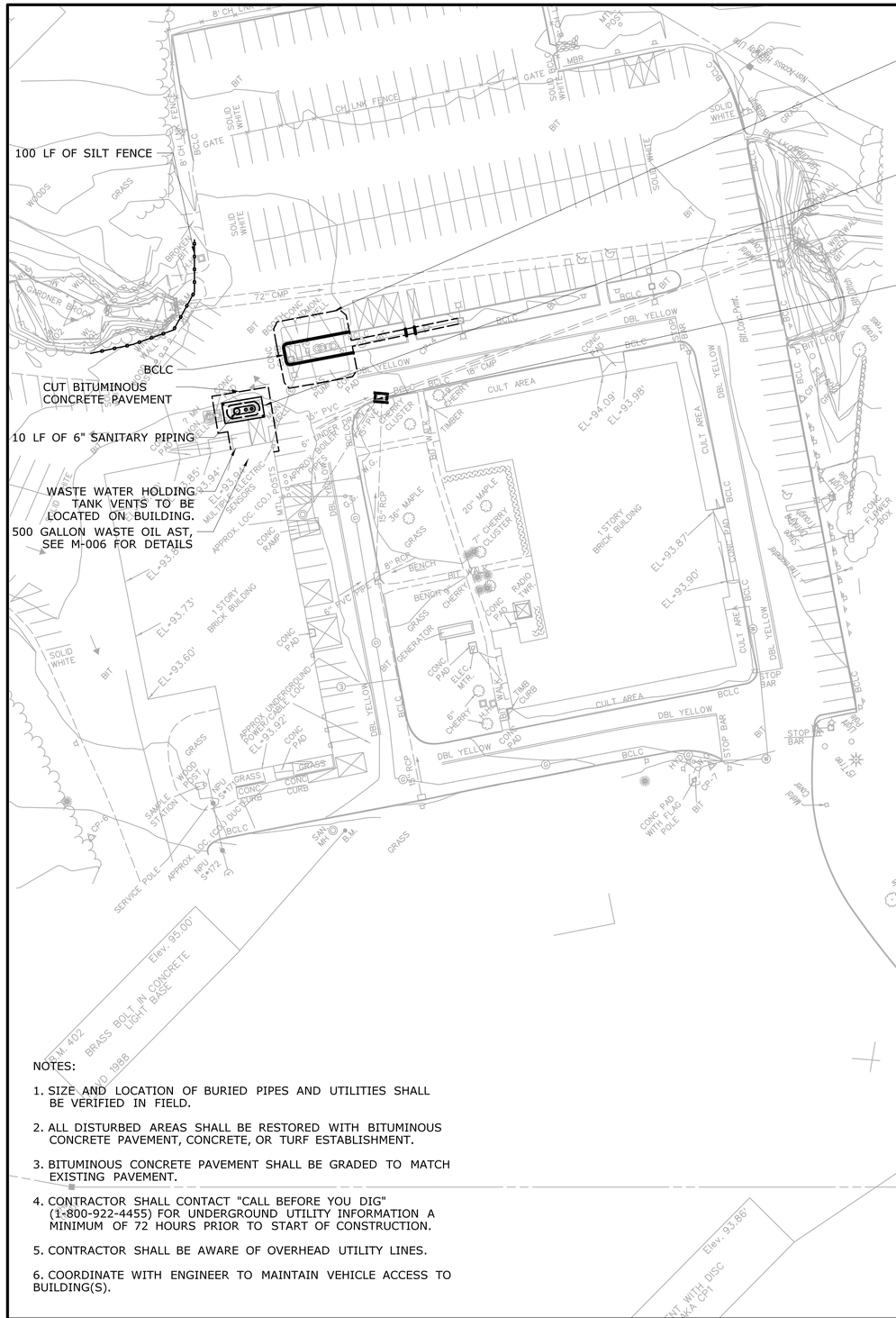

CUT BITUMINOUS CONCRETE PAVEMENT

5000 GALLON WASTE WATER HOLDING TANK, SEE C-008 FOR DETIALS. ELEV = 93.20'

SEDIMENT CONTROL ON CATCH BASIN, REFER TO C-011 FOR DETAIL

STEEL BOLLARD FOR CONDUIT PROTECTION TBD

E-STOP LOCATION TBD

TEMPORARY WASTE OIL NEEDED?

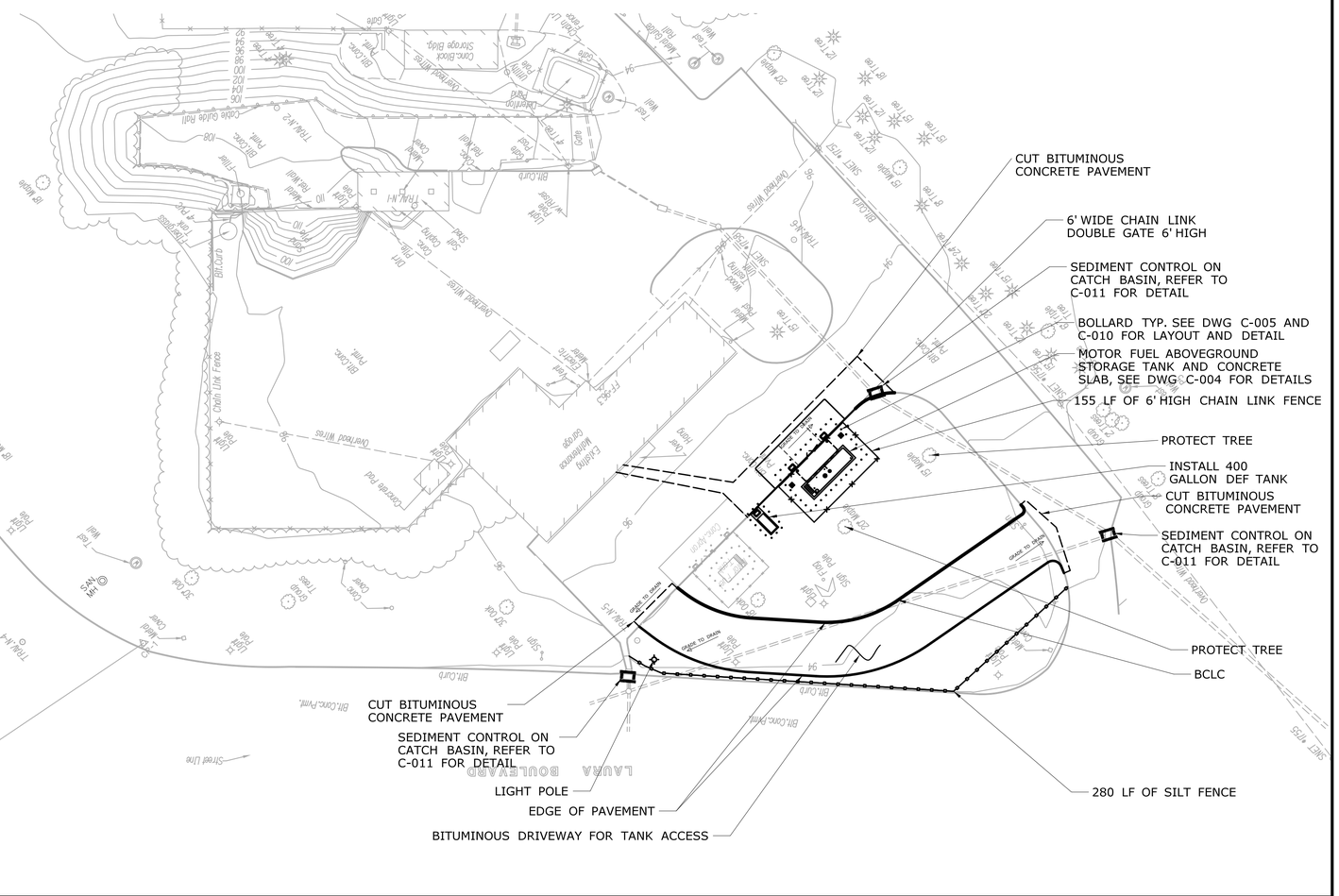

NOTES:

1. SIZE AND LOCATION OF BURIED PIPES AND UTILITIES SHALL BE VERIFIED IN FIELD.
2. ALL DISTURBED AREAS SHALL BE RESTORED WITH BITUMINOUS CONCRETE PAVEMENT, CONCRETE, OR TURF ESTABLISHMENT.
3. BITUMINOUS CONCRETE PAVEMENT SHALL BE GRADED TO MATCH EXISTING PAVEMENT.
4. CONTRACTOR SHALL CONTACT "CALL BEFORE YOU DIG" (1-800-922-4455) FOR UNDERGROUND UTILITY INFORMATION A MINIMUM OF 72 HOURS PRIOR TO START OF CONSTRUCTION.
5. CONTRACTOR SHALL BE AWARE OF OVERHEAD UTILITY LINES.
6. COORDINATE WITH ENGINEER TO MAINTAIN VEHICLE ACCESS TO BUILDING(S).

REV.	DATE	REVISION DESCRIPTION	SHEET NO.

THE INFORMATION, INCLUDING ESTIMATED QUANTITIES OF WORK, SHOWN ON THESE SHEETS IS BASED ON LIMITED INVESTIGATIONS BY THE STATE AND IS IN NO WAY WARRANTED TO INDICATE THE CONDITIONS OF ACTUAL QUANTITIES OF WORK WHICH WILL BE REQUIRED.

Plotted Date: 9/16/2019

DESIGNER/DRAFTER: ME

CHECKED BY: ME

SCALE IN FEET 0 40 80

SCALE 1"=40'

STATE OF CONNECTICUT
DEPARTMENT OF TRANSPORTATION

Filename: ...\Facilities\Civil\C-003.dgn

SIGNATURE/ BLOCK:

OFFICE OF ENGINEERING

APPROVED BY:

PROJECT TITLE:

EAST LYME P&FS FACILITY AND NORWICH DAS GARAGE TANK REPLACMENT

TOWN: NORWICH

DRAWING TITLE: SITE PLAN

PROJECT NO. 172-466

DRAWING NO. C-003

SHEET NO. 04.03

6" NO. 3 STONE ON 6" GRANULAR FILL.

TURF ESTABLISHMENT - LAWN ON 4" OF TOPSOIL

BITUMINOUS CONCRETE PAVEMENT REFER TO DWG C-009 FOR DETAIL.

12" RIP RAP ON 6" GRANULAR FILL

NOTES:
1. REFER TO DWG C-009 FOR BITUMINOUS CONCRETE LIP CURBING (BCLC) DETAIL.

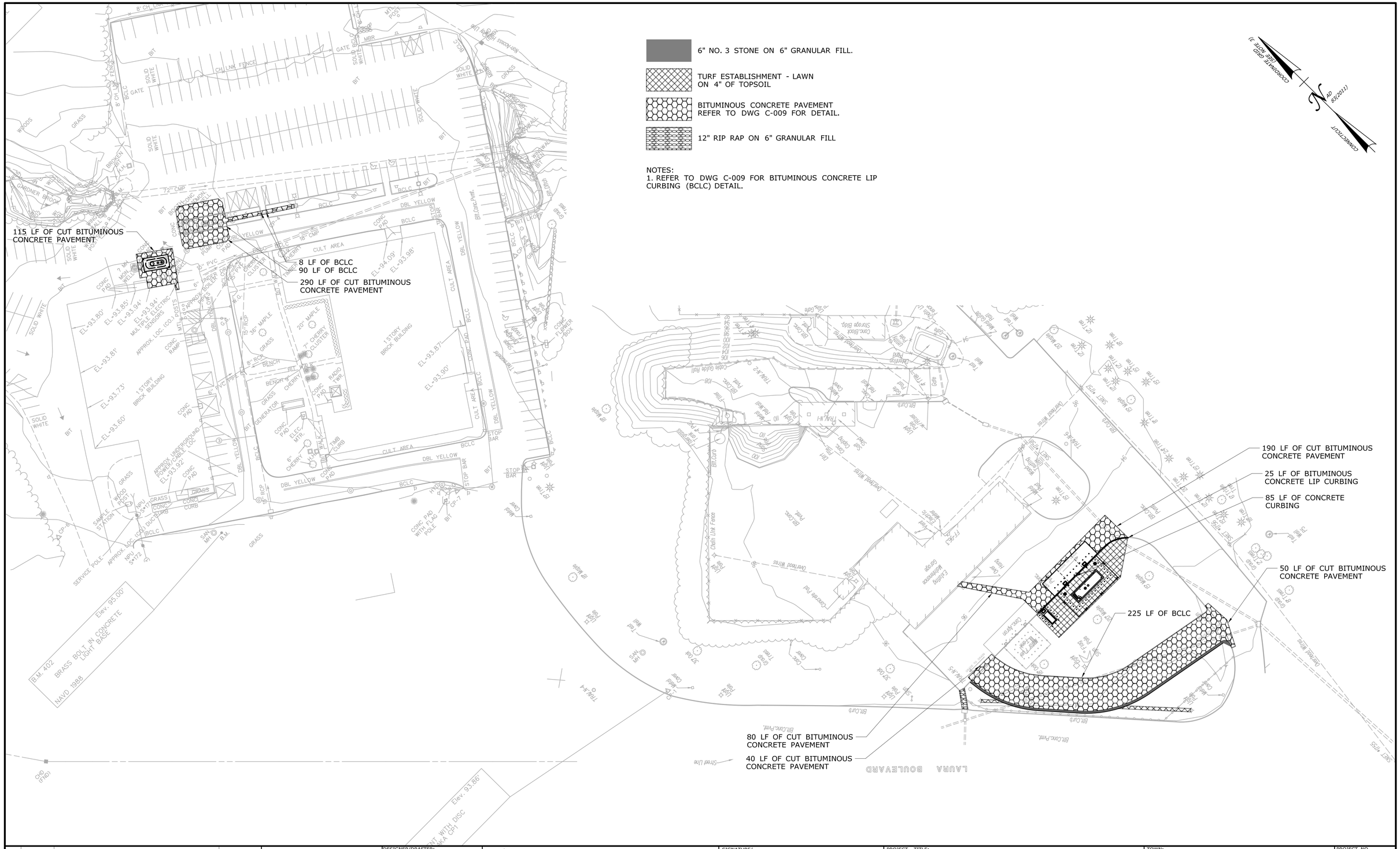
115 LF OF CUT BITUMINOUS CONCRETE PAVEMENT
8 LF OF BCLC
90 LF OF BCLC
290 LF OF CUT BITUMINOUS CONCRETE PAVEMENT
190 LF OF CUT BITUMINOUS CONCRETE PAVEMENT
25 LF OF BITUMINOUS CONCRETE LIP CURBING
85 LF OF CONCRETE CURBING
50 LF OF CUT BITUMINOUS CONCRETE PAVEMENT
225 LF OF BCLC
80 LF OF CUT BITUMINOUS CONCRETE PAVEMENT
40 LF OF CUT BITUMINOUS CONCRETE PAVEMENT
B.M. 402
BRASS BOLT IN CONCRETE LIGHT BASE
Elev. 95.00
NAVD 1988
Elev. 93.66
1 STORY BRICK BUILDING
CULT AREA
DBL YELLOW
BCLC
LAURA BOULEVARD
Street Line
Overhead Wires
Chain Link Fence
Bit.Conc.Pvmt.
Bit.Curb
Concrete Pad
Existing Maintenance Garage
Storage Bldg.
Cable Guide Rail
Concrete Block
Concrete Apron
Wood Fence
Wood Cover
Wood Post
Light Pole
Top Pole
Tree
Grass
Woods
Gate
Fence
Wall
Top Wall
Top Cover
Top Post
Top Gate
Top Fence
Top Rail
Top Post
Top Pipe
Top Post
Top Post
Top Post

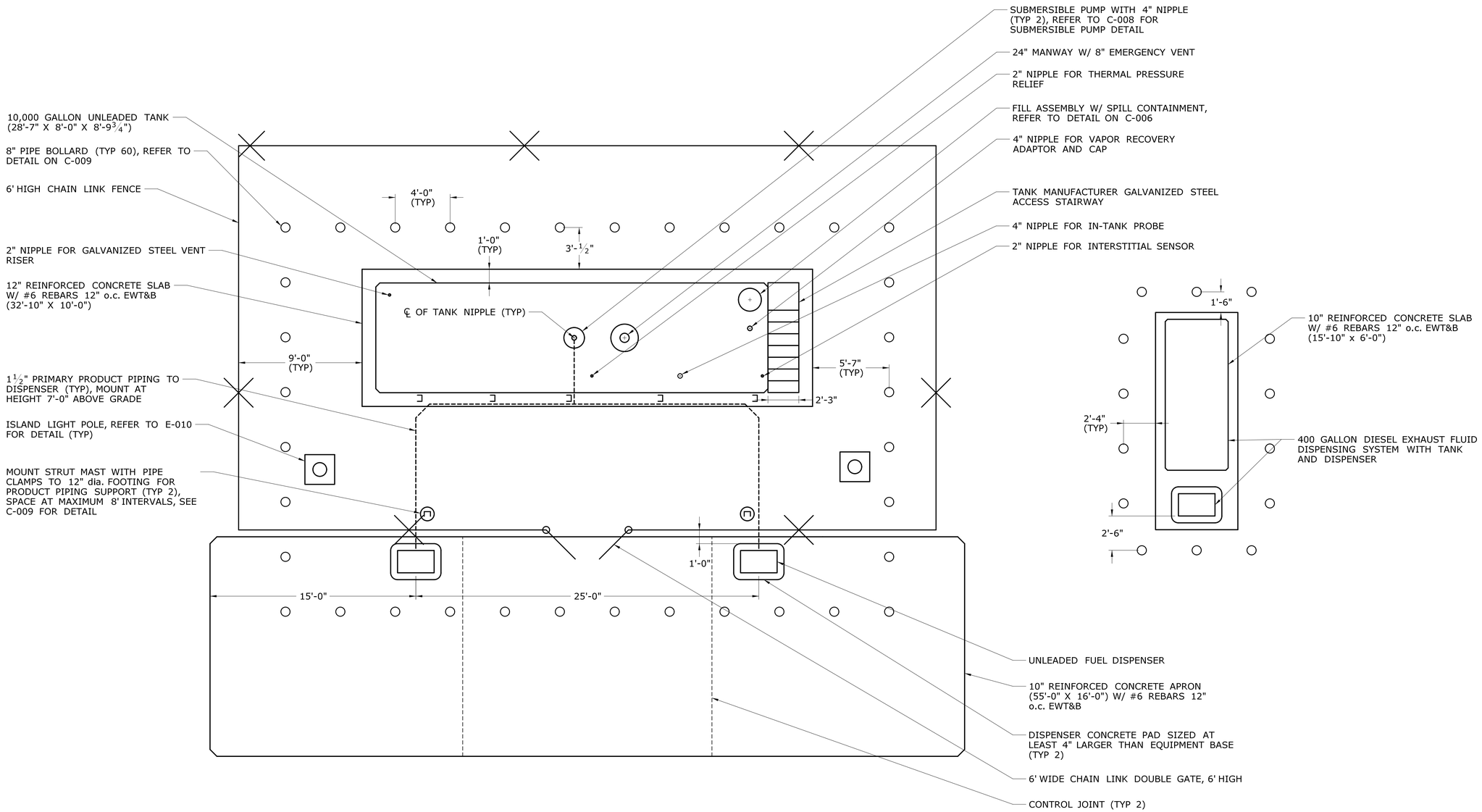

REV.	DATE	REVISION DESCRIPTION	SHEET NO.
1	12/19/16	CONCRETE APRON REBAR SPACING	04.10

THE INFORMATION, INCLUDING ESTIMATED QUANTITIES OF WORK, SHOWN ON THESE SHEETS IS BASED ON LIMITED INVESTIGATIONS BY THE STATE AND IS IN NO WAY WARRANTED TO INDICATE THE CONDITIONS OF ACTUAL QUANTITIES OF WORK WHICH WILL BE REQUIRED.

Plotted Date: 9/16/2019

DESIGNER/DRAFTER: KP

CHECKED BY: JAB

SCALE: ¼" = 1'-0"

STATE OF CONNECTICUT
DEPARTMENT OF TRANSPORTATION

Filename: ...\Facilities\Civil\C-005.dgn

SIGNATURE/BLOCK:
OFFICE OF ENGINEERING

APPROVED BY:

PROJECT TITLE:
EAST LYME P&FS FACILITY AND NORWICH DAS GARAGE TANK REPLACEMENT

TOWN: **NORWICH**

DRAWING TITLE: **MOTOR FUEL ISLAND PLAN**

PROJECT NO. **172-466**

DRAWING NO. **C-005**

SHEET NO. **04.05**

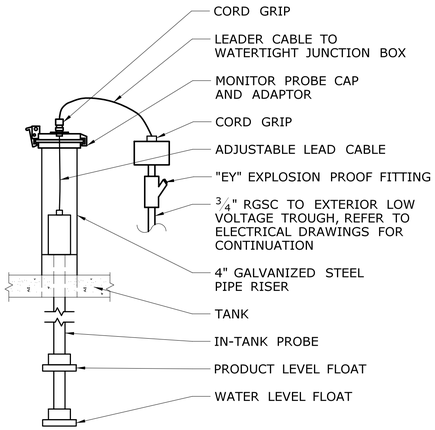

IN-TANK PROBE DETAIL

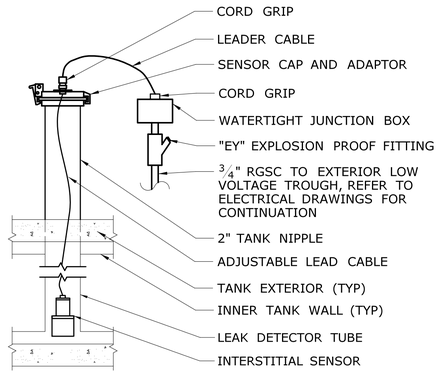

INTERSTITIAL SENSOR DETAIL

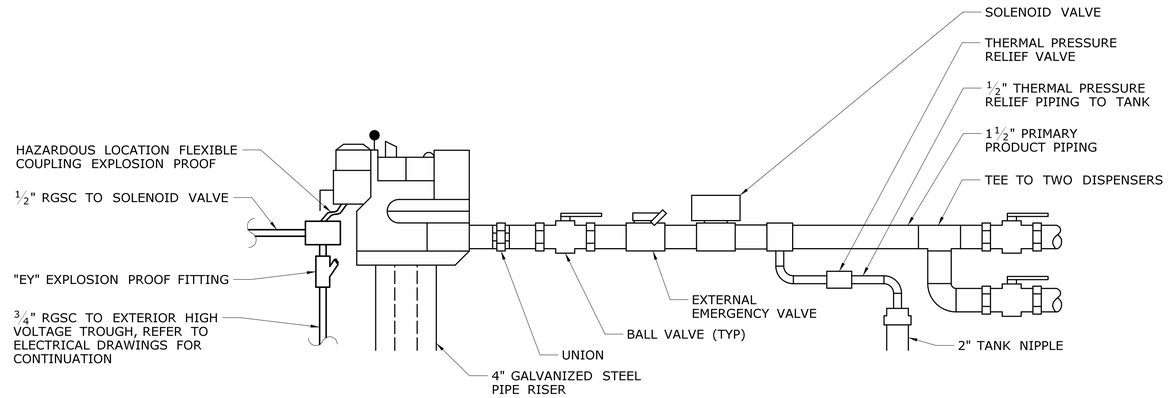

SUBMERSIBLE PUMP DETAIL

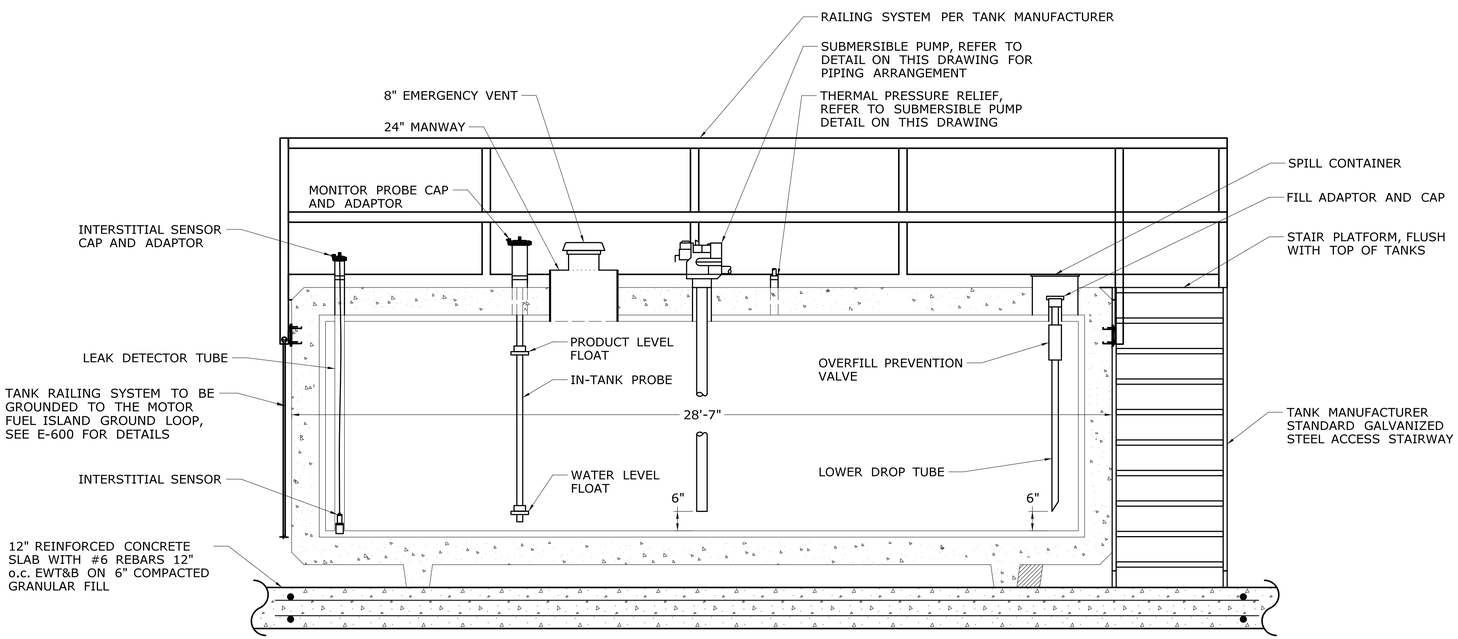

SECTION A / C-005

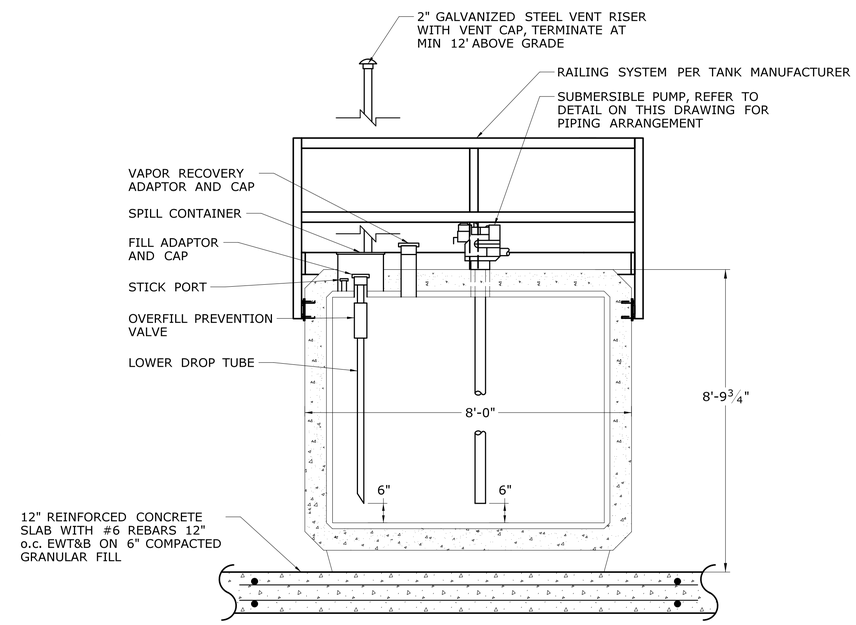

SECTION B / C-005

NOTES:

1. THE DESIGNED TANK DIMENSIONS AND SUPPORT LEG LOCATIONS ARE BASED ON CONVAULT. ACTUAL SLAB DIMENSIONS SHALL BE SIZED BASED ON THE APPROVED TANK DIMENSIONS AND SUPPORT LEG LOCATIONS.
2. THE TANK NIPPLE ARRANGEMENT IS BASED ON CONVAULT TANKS. ACTUAL TANK NIPPLE ARRANGEMENT SHALL BE DESIGNED AS NECESSARY BASED ON THE APPROVED TANK MANUFACTURER.
3. ALL CONDUITS SHALL BE PROVIDED WITH EXPLOSION PROOF FITTINGS AND SEALED AS REQUIRED IN ACCORDANCE WITH NFPA 70.

MOTOR FUEL ABOVEGROUND STORAGE TANK DETAIL

REV.	DATE	REVISION DESCRIPTION	SHEET NO.

THE INFORMATION, INCLUDING ESTIMATED QUANTITIES OF WORK, SHOWN ON THESE SHEETS IS BASED ON LIMITED INVESTIGATIONS BY THE STATE AND IS IN NO WAY WARRANTED TO INDICATE THE CONDITIONS OF ACTUAL QUANTITIES OF WORK WHICH WILL BE REQUIRED.

Plotted Date: 9/16/2019

DESIGNER/DRAFTER: ME
CHECKED BY: JSB
SCALE AS NOTED

STATE OF CONNECTICUT
DEPARTMENT OF TRANSPORTATION

Filename: ...\Facilities\Civil\C-006.dgn

SIGNATURE/BLOCK: OFFICE OF ENGINEERING
APPROVED BY:

PROJECT TITLE: EAST LYME P&FS FACILITY AND NORWICH DAS GARAGE TANK REPLACEMENT

TOWN: NORWICH

DRAWING TITLE: MOTOR FUEL ISLAND TANK DETAILS

PROJECT NO. 172-466
DRAWING NO. C-006
SHEET NO. 04.06

4" TURF ESTABLISHMENT ON TOPSOIL

BITUMINOUS CONCRETE PAVEMTENT REFER TO DWG C-009 FOR DETAIL

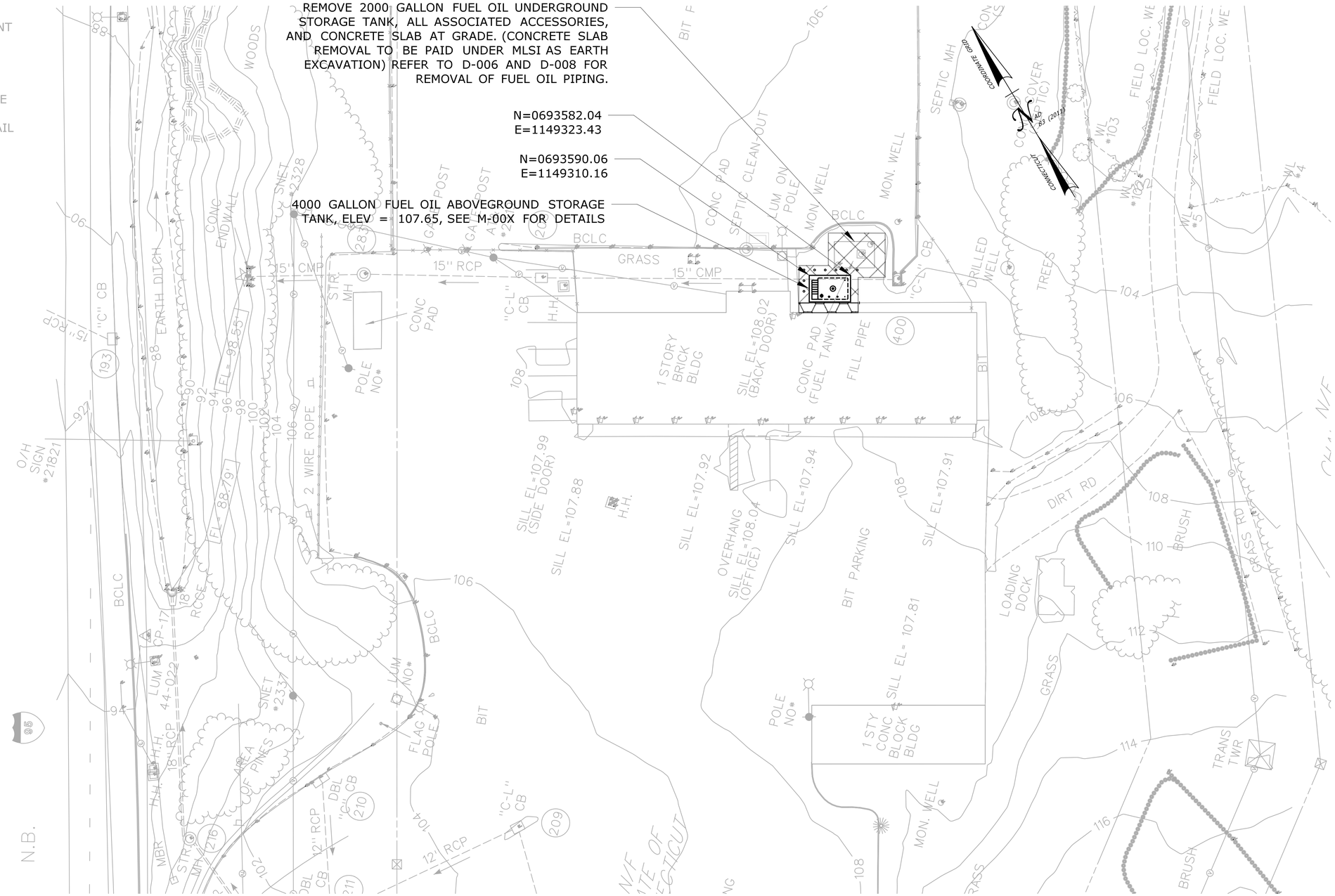

REV.	DATE	REVISION DESCRIPTION	SHEET NO.

THE INFORMATION, INCLUDING ESTIMATED QUANTITIES OF WORK, SHOWN ON THESE SHEETS IS BASED ON LIMITED INVESTIGATIONS BY THE STATE AND IS IN NO WAY WARRANTED TO INDICATE THE CONDITIONS OF ACTUAL QUANTITIES OF WORK WHICH WILL BE REQUIRED.

Plotted Date: 9/16/2019

DESIGNER/DRAFTER: ME

CHECKED BY: ME

SCALE IN FEET 0 20 40

SCALE 1"=20'

STATE OF CONNECTICUT
DEPARTMENT OF TRANSPORTATION

Filename: ...\Facilities\Civil\C-007.dgn

SIGNATURE/ BLOCK:

OFFICE OF ENGINEERING

APPROVED BY:

PROJECT TITLE:

EAST LYME P&FS FACILITY AND NORWICH DAS GARAGE TANK REPLACMENT

TOWN: EAST LYME

DRAWING TITLE: SITE AND DEMOLITION PLAN

PROJECT NO. 172-466

DRAWING NO. C-007

SHEET NO. 04.07

NOTES:

1. THE DESIGNED TANK DIMENSIONS ARE BASED ON CONTAINMENT SOLUTIONS. ACTUAL PAD DIMENSIONS SHALL BE SIZED BASED ON THE APPROVED TANK DIMENSIONS.
2. THE MANHOLE ARRANGEMENT IS BASED ON CONTAINMENT SOLUTIONS TANKS. ACTUAL MANHOLE ARRANGEMENT SHALL BE REDESIGNED AS NECESSARY BASED ON THE APPROVED TANK MANUFACTURER.
3. ALL CONDUITS SHALL BE PROVIDED WITH EXPLOSIONPROOF FITTINGS AND SEALED AS REQUIRED IN ACCORDANCE WITH NFPA 70.
4. ALLOW SLACK AT TANK IN ALL PIPING FOR SETTLING OF TANK.
5. ACTUAL TANK BURIAL DEPTH TO BE AS RECIEVED BY PIPE ELEVATIONS. REFER TO PLAN C-005.

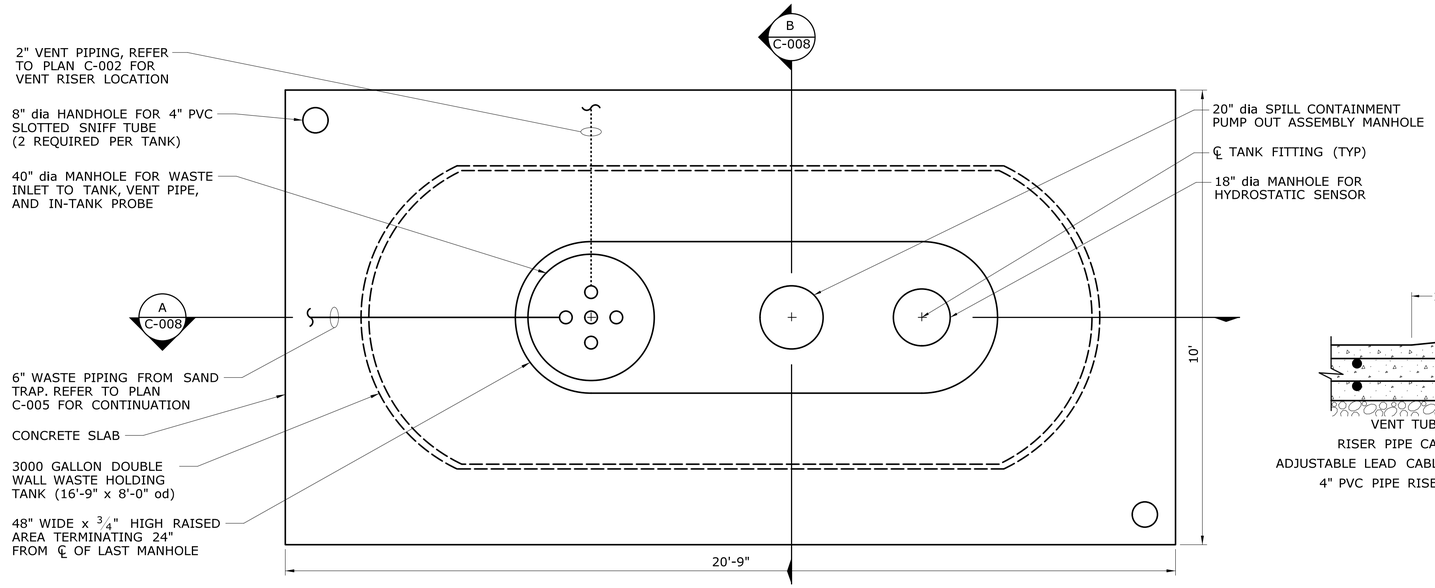

WASTE HOLDING TANK PLAN VIEW

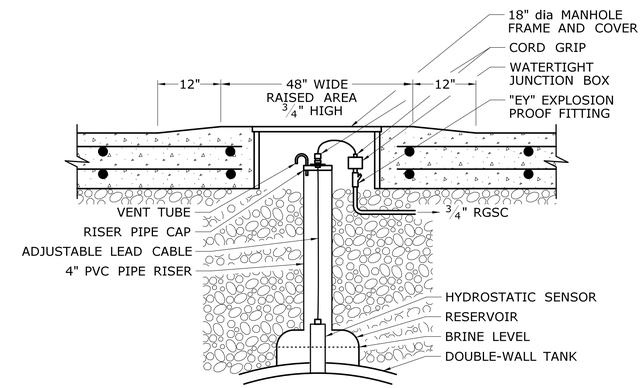

HYDROSTATIC SENSOR DETAIL

NOT TO SCALE

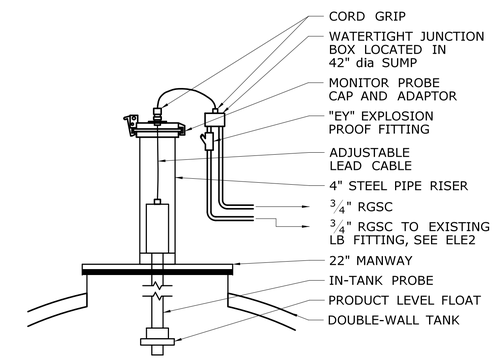

IN-TANK PROBE DETAIL

NOT TO SCALE

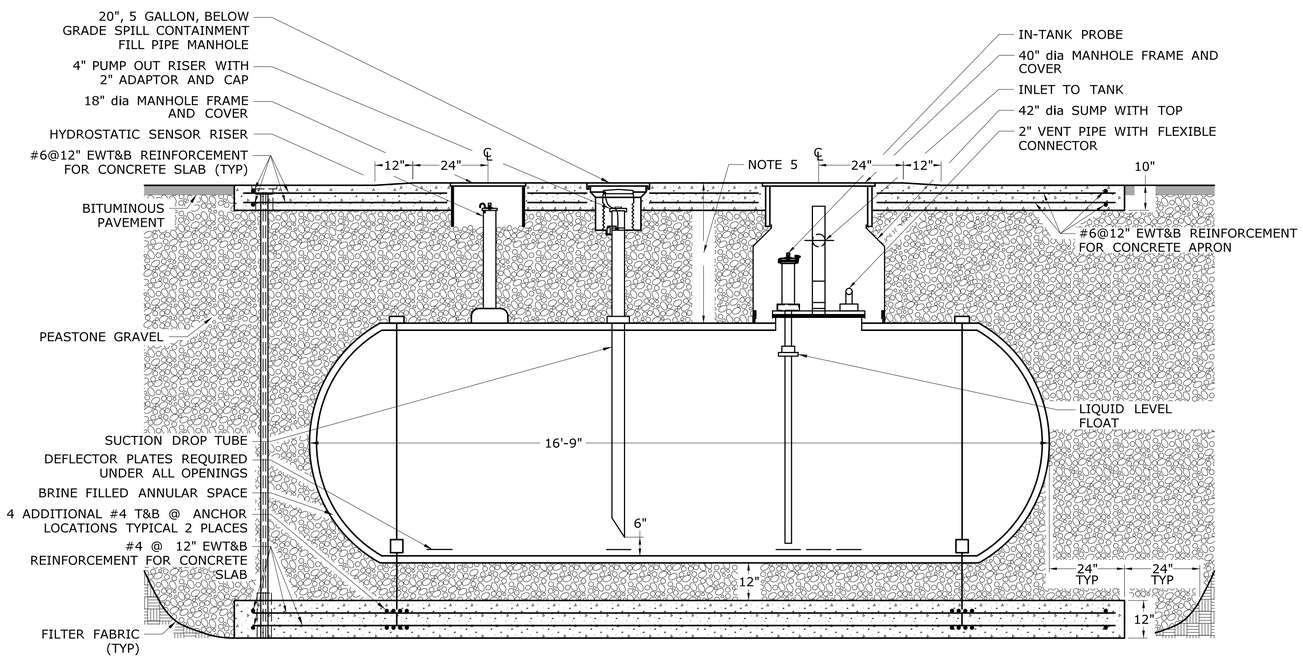

SECTION A C-008

NOT TO SCALE

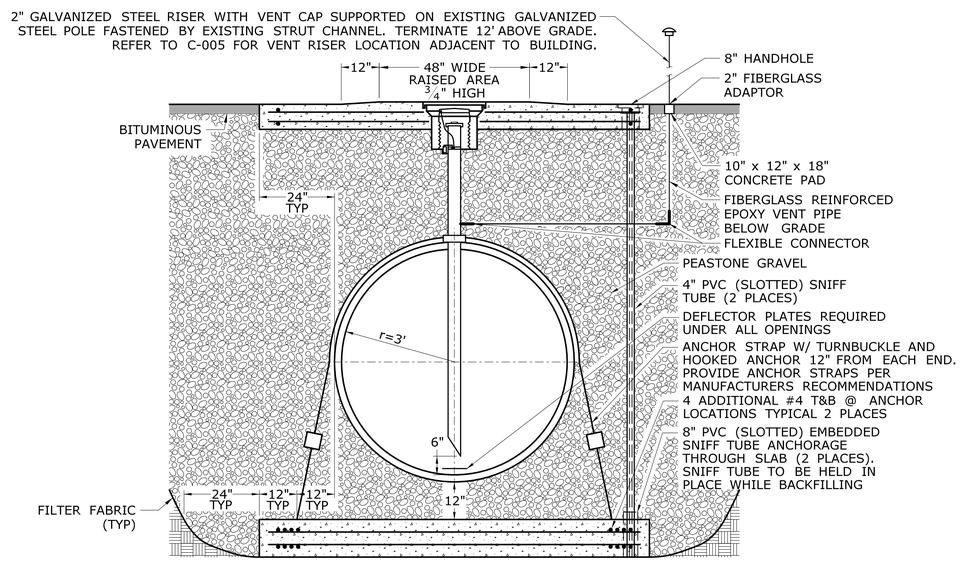

SECTION B C-008

NOT TO SCALE

3000 GALLON DOUBLE WALL WASTE HOLDING TANK DETAIL

REV.	DATE	REVISION DESCRIPTION	SHEET NO.

THE INFORMATION, INCLUDING ESTIMATED QUANTITIES OF WORK, SHOWN ON THESE SHEETS IS BASED ON LIMITED INVESTIGATIONS BY THE STATE AND IS IN NO WAY WARRANTED TO INDICATE THE CONDITIONS OF ACTUAL QUANTITIES OF WORK WHICH WILL BE REQUIRED.

Plotted Date: 9/16/2019

DESIGNER/DRAFTER: JAB
CHECKED BY: JAB
SCALE AS NOTED

STATE OF CONNECTICUT
DEPARTMENT OF TRANSPORTATION

Filename: ...\Facilities\Civil\C-008.dgn

SIGNATURE/BLOCK: OFFICE OF ENGINEERING
APPROVED BY:

PROJECT TITLE: MAINTENANCE FACILITY RENOVATION

TOWN: NORWICH

DRAWING TITLE: WASTE WATER HOLDING TANK

PROJECT NO. 172-466
DRAWING NO. C-008
SHEET NO. 04.08

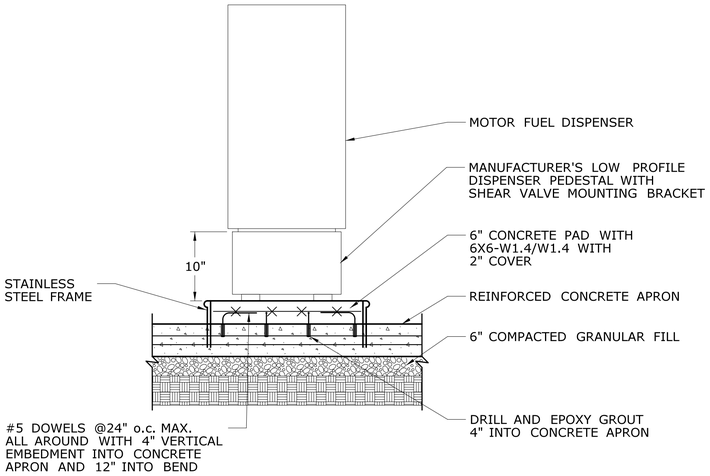

DISPENSER PAD AND APRON DETAIL

C
C-006

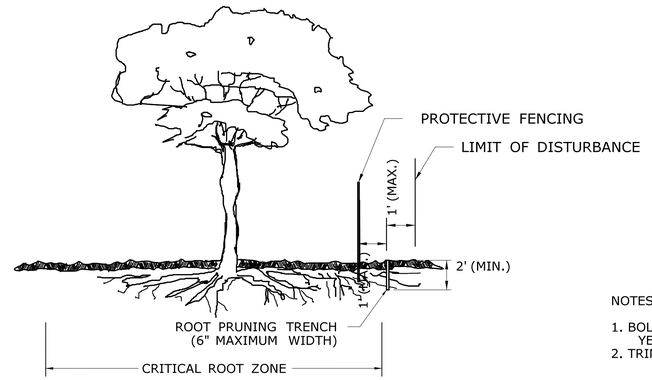

NOTES:
1. BOUNDARIES FOR ROOT PRUNING TO BE STAKED PRIOR TO CLEARING AND GRUBBING.
2. EXACT LOCATION OF TRENCH SHOULD BE IDENTIFIED BY THE LANDSCAPE DESIGNER OR ENGINEER.
3. TRENCH SHOULD BE IMMEDIATELY BACKFILLED WITH SOIL REMOVED OR ORGANIC SOIL.
4. ROOTS SHOULD BE CLEANLY CUT USING VIBRATORY KNIFE OR OTHER ACCEPTABLE EQUIPMENT.
5. ANCHOR POSTS SHOULD BE MINIMUM 2" STEEL "U" CHANNEL OR 2"X2" TIMBER, 6' LENGTH. INSTALL TO A DEPTH OF NO LESS THAN ½ OF THE TOTAL HEIGHT OF THE POST.
6. PROTECTION FENCE SHALL BE MAINTAINED THROUGHOUT CONSTRUCTION.

TREE PROTECTION

NOT TO SCALE

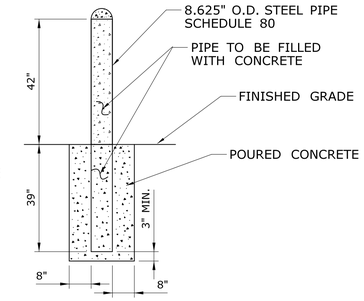

NOTES:
1. BOLLARDS SHALL BE COVERED WITH ¼" YELLOW POLYETHYLENE COVER.
2. TRIM BOLLARD COVER TO FIT.

BOLLARD

NOT TO SCALE

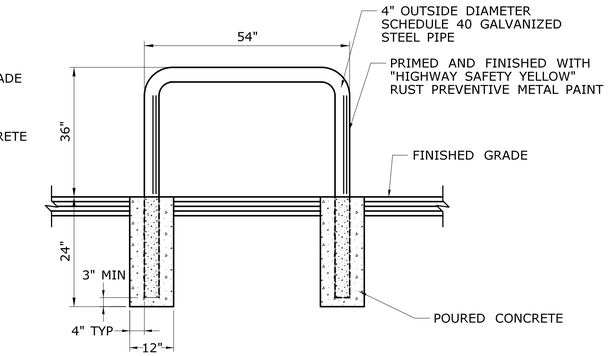

STEEL BOLLARD

NOT TO SCALE

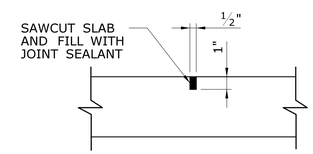

SLAB CONTROL JOINT

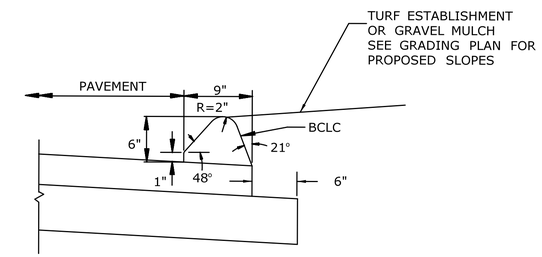

BITUMINOUS CONCRETE CURBING

NOT TO SCALE

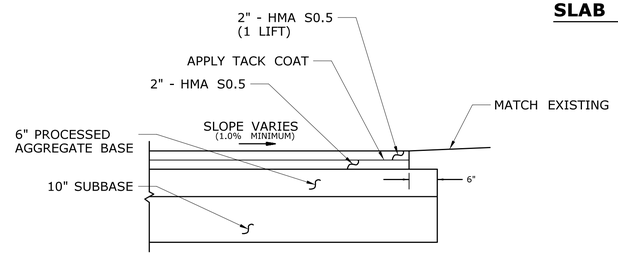

BITUMINOUS CONCRETE PAVEMENT

NOT TO SCALE

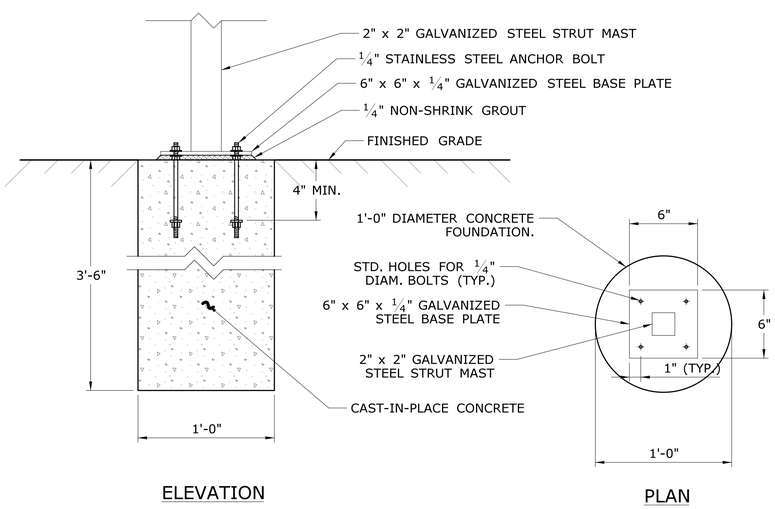

PRODUCT PIPING SUPPORT FOUNDATION

NOT TO SCALE

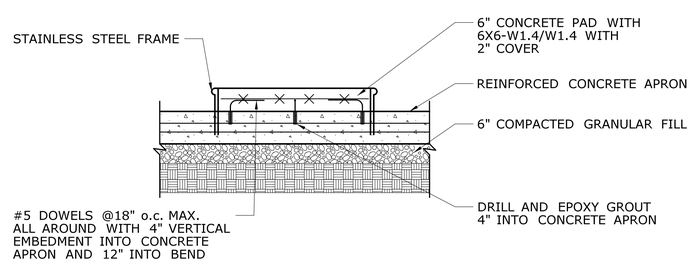

FMU PAD SECTION

D
C-008

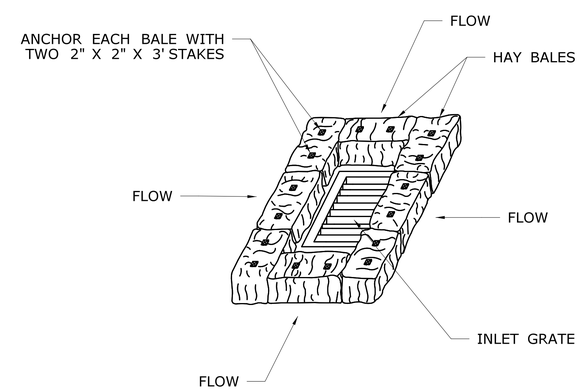

HAY BALE INSTALLATION AT CATCH BASINS

NOT TO SCALE

REV.	DATE	REVISION DESCRIPTION	SHEET NO.

THE INFORMATION, INCLUDING ESTIMATED QUANTITIES OF WORK, SHOWN ON THESE SHEETS IS BASED ON LIMITED INVESTIGATIONS BY THE STATE AND IS IN NO WAY WARRANTED TO INDICATE THE CONDITIONS OF ACTUAL QUANTITIES OF WORK WHICH WILL BE REQUIRED.

Plotted Date: 9/16/2019

DESIGNER/DRAFTER: ME
CHECKED BY: ME
NOT TO SCALE

STATE OF CONNECTICUT
DEPARTMENT OF TRANSPORTATION

Filename: ...\Facilities\Civil\C-009.dgn

SIGNATURE/BLOCK: OFFICE OF ENGINEERING
APPROVED BY:

PROJECT TITLE: EAST LYME P&FS FACILITY AND NORWICH DAS GARAGE TANK REPLACEMENT

TOWN: NORWICH EAST LYME

DRAWING TITLE: MISCELLANEOUS DETAILS

PROJECT NO. 172-466
DRAWING NO. C-009
SHEET NO. 04.09