06 - ELECTRICAL
INDEX OF DRAWINGS

DRAWING NUMBER	DRAWING TITLE	DRAWING NUMBER	DRAWING TITLE
E-001	INDEX OF DRAWINGS		
E-002	GENERAL NOTES AND SYMBOLS		
E-003	EAST LYME ELECTRICAL SITE PLAN		
E-004	NORWICH DAS ELECTRICAL SITE PLAN		
E-005	P&FS REGION 2 ELECTRICAL SITE PLAN		
E-006	FUEL ISLAND CONDUIT PLAN		
E-007	FUEL ISLAND EQUIPMENT PLAN		
E-008	MISC DETAILS 1		
E-009	ONE-LINE DIAGRAM		
E-010	ROADWAY AND ISLAND LIGHTING DETAILS		
E-011	MISC DETAILS 2		

THE DESIGN APPEARS TO CONFORM TO APPLICABLE CRITERIA. APPROVAL IS NOT TO BE CONSTRUED TO MEAN THAT ALL APPSECTS OF THE DESIGN HAVE BEEN PERSONALLY CHECKED BY THE UNDERSIGNED.

Christopher J. Bonsignore, P.E.
2019.09.16 12:55:50-04'00'

TRANSPORTATION PRINCIPAL ENGINEER

REV.	DATE	REVISION DESCRIPTION	SHEET NO.

THE INFORMATION, INCLUDING ESTIMATED QUANTITIES OF WORK, SHOWN ON THESE SHEETS IS BASED ON LIMITED INVESTIGATIONS BY THE STATE AND IS IN NO WAY WARRANTED TO INDICATE THE CONDITIONS OF ACTUAL QUANTITIES OF WORK WHICH WILL BE REQUIRED.

Plotted Date: 9/12/2019

DESIGNER/DRAFTER: JDV
CHECKED BY: MPW
NO SCALE

STATE OF CONNECTICUT
DEPARTMENT OF TRANSPORTATION

Filename: ...\FD_MSH_ELE_0172_0466_E-001.dgn

SIGNATURE/BLOCK:
OFFICE OF ENGINEERING
APPROVED BY:

PROJECT TITLE:
EAST LYME P&FS FACILITY AND NORWICH DAS GARAGE TANK REPLACEMENT

TOWN:
EAST LYME
NORWICH

DRAWING TITLE:
INDEX OF DRAWINGS

PROJECT NO. 0172-0466
DRAWING NO. E-001
SHEET NO. 06.01

POWER SYMBOLS

GROUND ROD

120/208V POWER/LIGHTING PANEL

GENERAL NOTES

1. THE CONTRACTOR IS RESPONSIBLE FOR LOCATING ALL EXISTING UNDERGROUND UTILITIES. THE CONTRACTOR IS RESPONSIBLE FOR CONTACTING "CALL BEFORE YOU DIG" BEFORE ANY EXCAVATION WORK TAKES PLACE. THE CONTRACTOR IS RESPONSIBLE FOR PROVIDING ALL NECESSARY EQUIPMENT AND MATERIAL NEEDED TO IDENTIFY UNDERGROUND UTILITIES THROUGH NON-DESTRUCTIVE METHODS.
2. ALL UNDERGROUND CONDUIT SHALL BE INSTALLED AWAY FROM OTHER UTILITIES. THE CONTRACTOR SHALL COORDINATE WITH ALL OTHER UTILITIES TO ESTABLISH CLEARANCE REQUIREMENTS.
3. THE CONTRACTOR SHALL COORDINATE ANY INTERRUPTIONS IN SERVICE WITH THE ENGINEER.
4. ALL CONDUCTORS SHALL BE IN 3/4" CONDUIT MINIMUM UNLESS OTHERWISE NOTED. ALL POWER CIRCUITS SHALL BE (2)#12, (1)#12G. IF BRANCH CIRCUIT EXCEEDS 150 FEET IN LENGTH CONDUCTORS SHALL BE #10 TO REFLECT VOLTAGE DROP. COMMUNICATION CONDUCTOR QUANTITY AND TYPE AS INDICATED ON THE PLANS. INTRINSICALLY SAFE CONDUCTOR QUANTITY AND TYPE AS PER MONITORING DEVICE REQUIREMENTS.
5. ALL CONDUCTORS INSTALLED IN THE BUILDING AT FLOOR LEVEL UP TO AND INCLUDING THE UNIFORMED HEIGHT OF 10 FEET ABOVE FINISHED FLOOR SHALL BE INSTALLED IN RGSC. CONDUCTORS EXTENDING BEYOND THE 10 FOOT HEIGHT SHALL BE EMT. EXCEPTION NON- INTRINSICALLY SAFE COMMUNICATION CONDUCTORS CAN BE SUSPENDED IN DROP CEILING.
6. AN EXPLOSION PROOF FITTING IS REQUIRED AT EACH END OF ANY CONDUIT ENTERING OR LEAVING A CLASS I ZONE. FITTINGS SHALL BE WITHIN 18" OF WIRING DEVICES AND BEFORE ENTERING THE BUILDING.
7. THE CONTRACTOR SHALL INSTALL FIRESTOP AROUND ALL ELECTRICAL CONDUIT PENETRATIONS THROUGH FIRE RATED WALLS.
8. ALL EXTERIOR CONDUIT SWEEPS/STUB UPS PENETRATING PAVED AREAS OR CONCRETE WALKS SHALL BE PVC COATED RGSC. ALL OTHER AREAS SHALL USE RGSC SWEEPS/STUB UPS.
9. ALL UNDERGROUND COMMUNICATIONS CONDUCTORS (EG. FIRE ALARM CABLE, CAT 6, ETC) SHALL BE RATED FOR EXTERIOR UNDERGROUND USE.
10. INTRINSICALLY SAFE, COMMUNICATION, AND POWER CONDUCTORS SHALL NOT SHARE RACEWAYS. INTRINSICALLY SAFE RACEWAYS SHALL BE LABELED IN ACCORDANCE WITH NEC SECTION 504.80.
11. CONDUIT AND CIRCUIT ROUTING IS DIAGRAMMATIC. CONDUIT AND CIRCUITS MOUNTED ON EQUIPMENT SHALL BE ROUTED PER MANUFACTURERS SPECIFICATIONS AND RECOMMENDATIONS.

DEMOLITION NOTES:

1. WHERE DISTURBED BY DEMOLITION THE CONTRACTOR SHALL RESTORE THE BUILDING WITH SUITABLE MATERIALS. COLOR OF REPAIR TO MATCH EXISTING BUILDING COLOR SCHEME. FIRE RATING OF WALLS SHALL BE MAINTAINED AFTER REPAIR.

ABBREVIATIONS

A	AMPERE
AFF	ABOVE FINISHED FLOOR
AFG	ABOVE FINISHED GRADE
AIC	AMPS INTERRUPTING CAPACITY
C	CONDUIT
EMT	ELECTRICAL METALLIC TUBING
FMU	FUEL MANAGEMENT UNIT
FG	FUEL GAUGE
G	GROUND
HP	HORSE POWER
IS	INTERSTITIAL SENSOR
LVDD	LOW VOLTAGE DISPENSER DISCONNECT
MLO	MAIN LUG ONLY
NEC	NATIONAL ELECTRIC CODE
NO	NORMALLY OPEN
NO.,#	NUMBER
NTS	NOT TO SCALE
P	POLE
PVC	POLYVINYL CHLORIDE
RGSC	RIGID GALVANIZED STEEL CONDUIT
SCH	SCHEDULE
SW	SWITCH
SWN	SWITCHED NEUTRAL
TMS	TANK MONITORING SYSTEM
TYP	TYPICAL
V	VOLT(S)
W	WATT
WP	WEATHERPROOF
XFMR	TRANSFORMER

REV.	DATE	REVISION DESCRIPTION	SHEET NO.

THE INFORMATION, INCLUDING ESTIMATED QUANTITIES OF WORK, SHOWN ON THESE SHEETS IS BASED ON LIMITED INVESTIGATIONS BY THE STATE AND IS IN NO WAY WARRANTED TO INDICATE THE CONDITIONS OF ACTUAL QUANTITIES OF WORK WHICH WILL BE REQUIRED.

Plotted Date: 9/12/2019

DESIGNER/DRAFTER: JDV

CHECKED BY: MPW

SCALE AS NOTED

STATE OF CONNECTICUT
DEPARTMENT OF TRANSPORTATION

Filename: ...\FD_MSH_ELE_0172_0466_E-002.dgn

SIGNATURE/ BLOCK:

OFFICE OF ENGINEERING

APPROVED BY:

PROJECT TITLE:

EAST LYME P&FS FACILITY AND NORWICH DAS GARAGE TANK REPLACEMENT

TOWN: EAST LYME NORWICH

DRAWING TITLE: GENERAL NOTES AND SYMBOLS

PROJECT NO. 172-0466

DRAWING NO. E-002

SHEET NO. 06.02

GENERAL GROUNDING AND BONDING NOTES:

1. BOND AND GROUND ALL METALLIC CONDUITS, ENCLOSURES, CABLES, PROTECTORS, AND OTHER CONDUCTIVE INFRASTRUCTURE AS PER THE NEC AND NFPA 780.
2. CLEAN SURFACES OF NON-CONDUCTIVE COATINGS (SUCH AS PAINT, LACQUER, AND ENAMEL) ON EQUIPMENT TO BE GROUNDED ON CONTACT SURFACES TO ENSURE GOOD ELECTRICAL CONTINUITY OR BE CONNECTED BY MEANS OF FITTINGS DESIGNED SO AS TO MAKE SUCH REMOVAL UNNECESSARY.
3. All CONNECTIONS BELOW GRADE SHALL BE EXOTHERMICALLY WELDED
4. SEE DETAIL 5 ON DRAWING NO. E-008 FOR TANK GROUND PENETRATIONS THROUGH SLAB.

GROUNDING AND BONDING KEY NOTES:

1. BURIED GROUNDING RING CONSISTING OF #2 AWG BARE STRANDED COPPER 12" FROM TANK FOUNDATION AND 30" DEEP MINIMUM. (2) 3/4" X 10' COPPER CLAD GROUND RODS AT OPPOSING CORNERS CONNECTED TO GROUNDING RING
2. BOND TANK PER MANUFACTURES SPECIFICATIONS TO GROUND ROD WITH #2 AWG BARE STRANDED COPPER. GROUND WIRE SHALL BE CONTINUOS TO GROUND ROD.
3. BOND STAIRS/FALL PROTECTION/FENCE WITH UL LISTED MECHANICAL GROUNDING CONNECTOR AND #2 AWG BARE STRANDED COPPER CONDUCTOR TO GROUNDING ROD/RING.

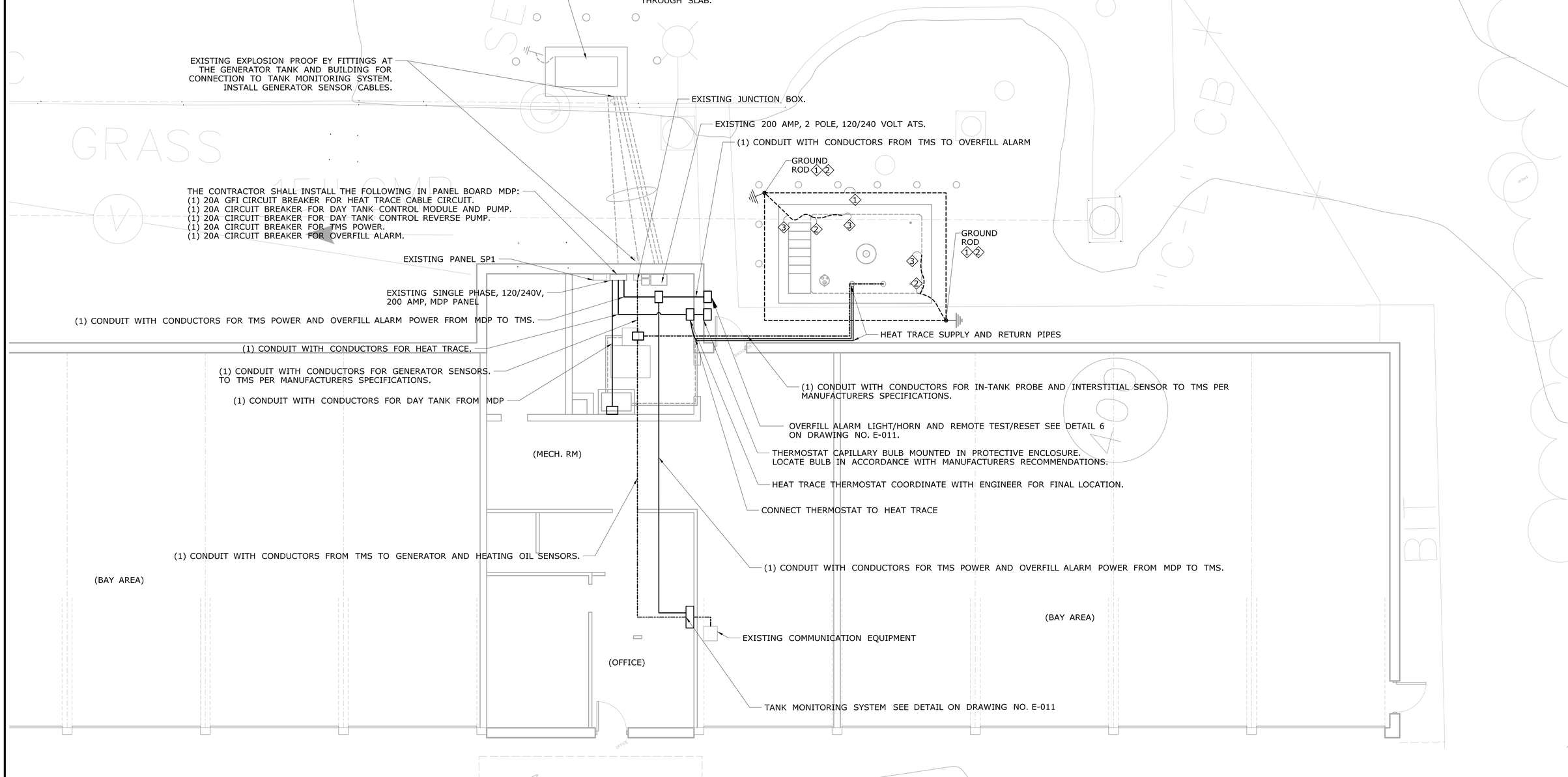

REV.	DATE	REVISION DESCRIPTION	SHEET NO.

THE INFORMATION, INCLUDING ESTIMATED QUANTITIES OF WORK, SHOWN ON THESE SHEETS IS BASED ON LIMITED INVESTIGATIONS BY THE STATE AND IS IN NO WAY WARRANTED TO INDICATE THE CONDITIONS OF ACTUAL QUANTITIES OF WORK WHICH WILL BE REQUIRED.

Plotted Date: 9/12/2019

DESIGNER/DRAFTER: JDV

CHECKED BY: MPW

SCALE IN FEET 0 5 10

SCALE 1"=5'

STATE OF CONNECTICUT
DEPARTMENT OF TRANSPORTATION

Filename: ...\FD_MSH_ELE_0172_0466_E-003.dgn

SIGNATURE/BLOCK: OFFICE OF ENGINEERING

APPROVED BY:

PROJECT TITLE: EAST LYME P&FS FACILITY AND NORWICH DAS GARAGE TANK REPLACEMENT

TOWN: EAST LYME

DRAWING TITLE: EAST LYME ELECTRICAL SITE PLAN

PROJECT NO. 0172-0466

DRAWING NO. E-003

SHEET NO. 06.03

NOTES:
1. REFER TO DRAWING NO. E-002 FOR GENERAL NOTES.

2) THE CONTRACTOR SHALL CONTACT DISTRICT 2 ELECTRICAL PRIOR TO ANY ROADWAY LIGHTING WORK (I.E. PARKING LOT LIGHTS FED FROM HIGHWAY CIRCUIT). COORDINATE ALL ROADWAY LIGHTING WITH RICHARD RUSSO (860-537-8942).

3) CABLE IN DUCT SHALL MEET THE REQUIREMENTS OF 817 SECTION M.15.12. CABLE IN DUCT IS PAID FOR UNDER ITEM #1014123 INSTALL SEPARATE BARE #8 GROUND WIRE IN TRENCH ALONG SIDE THE CABLE IN DUCT

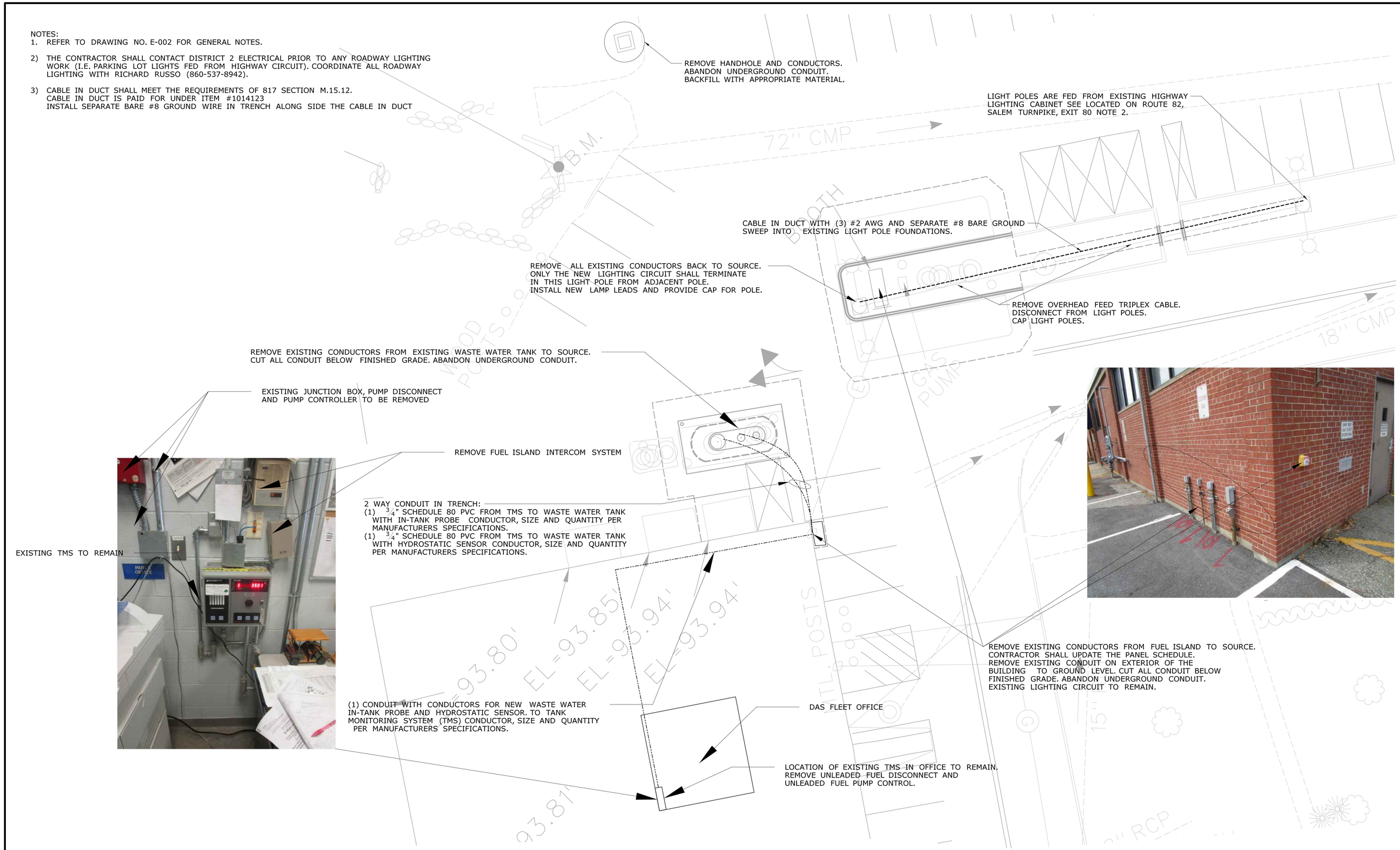

REV.	DATE	REVISION DESCRIPTION	SHEET NO.

THE INFORMATION, INCLUDING ESTIMATED QUANTITIES OF WORK, SHOWN ON THESE SHEETS IS BASED ON LIMITED INVESTIGATIONS BY THE STATE AND IS IN NO WAY WARRANTED TO INDICATE THE CONDITIONS OF ACTUAL QUANTITIES OF WORK WHICH WILL BE REQUIRED.

Plotted Date: 9/12/2019

DESIGNER/DRAFTER: JDV
CHECKED BY: MPW
SCALE IN FEET 0 10 20
SCALE 1"=10'

STATE OF CONNECTICUT
DEPARTMENT OF TRANSPORTATION

Filename: ...\FD_MSH_ELE_0172_0466_E-004.dgn

SIGNATURE/BLOCK: OFFICE OF ENGINEERING
APPROVED BY:

PROJECT TITLE: EAST LYME P&FS FACILITY AND NORWICH DAS GARAGE TANK REPLACEMENT

TOWN: NORWICH

DRAWING TITLE: NORWICH DAS ELECTRICAL SITE PLAN

PROJECT NO. 0172-0466
DRAWING NO. E-004
SHEET NO. 06.04

NOTES:
1. REFER TO DRAWING NO. E-002 FOR GENERAL NOTES.

2. REFER TO DRAWING NO. E-007 FOR CLERKS OFFICE MODIFICATIONS.

3) THE CONTRACTOR SHALL CONTACT DISTRICT 2 ELECTRICAL PRIOR TO ANY ROADWAY LIGHTING WORK. COORDINATE ALL ROADWAY LIGHTING WITH RICHARD RUSSO (860-537-8942).

4) CABLE IN DUCT SHALL MEET THE REQUIREMENTS OF 817 SECTION M.15.12. CABLE IN DUCT IS PAID FOR UNDER ITEM #1014123. INSTALL SEPARATE BARE #8 GROUND WIRE IN TRENCH ALONG SIDE THE CABLE IN DUCT

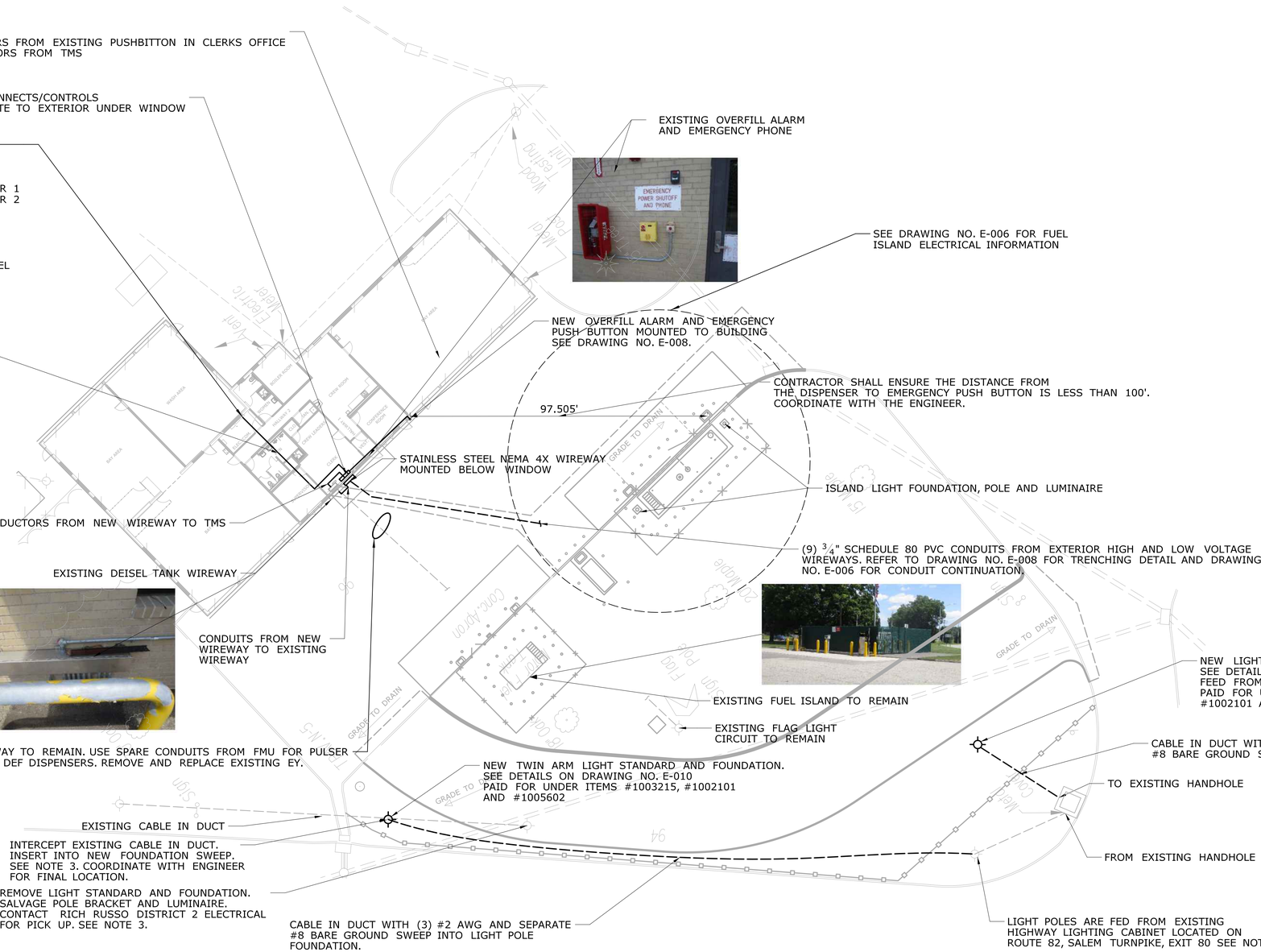

REV.	DATE	REVISION DESCRIPTION	SHEET NO.

THE INFORMATION, INCLUDING ESTIMATED QUANTITIES OF WORK, SHOWN ON THESE SHEETS IS BASED ON LIMITED INVESTIGATIONS BY THE STATE AND IS IN NO WAY WARRANTED TO INDICATE THE CONDITIONS OF ACTUAL QUANTITIES OF WORK WHICH WILL BE REQUIRED.

Plotted Date: 9/12/2019

DESIGNER/DRAFTER: JDV
CHECKED BY: MPW
SCALE IN FEET 0 20 40
SCALE 1"=20'

STATE OF CONNECTICUT
DEPARTMENT OF TRANSPORTATION

Filename: ...\FD_MSH_ELE_0172_0466_E-005.dgn

SIGNATURE/BLOCK: OFFICE OF ENGINEERING
APPROVED BY:

PROJECT TITLE: EAST LYME P&FS FACILITY AND NORWICH DAS GARAGE TANK REPLACEMENT

TOWN: NORWICH

DRAWING TITLE: P&FS REGION 2 ELECTRICAL SITE PLAN

PROJECT NO. 0172-0466
DRAWING NO. E-005
SHEET NO. 06.05

NOTES:
1.REFER TO DRAWING NO. E-002 FOR GENERAL NOTES.

GENERAL GROUNDING AND BONDING NOTES:

1. BOND AND GROUND ALL METALLIC CONDUITS, ENCLOSURES, CABLES, PROTECTORS, AND OTHER CONDUCTIVE INFRASTRUCTURE AS PER THE NEC AND NFPA 780.
2. CLEAN SURFACES OF NON-CONDUCTIVE COATINGS (SUCH AS PAINT, LACQUER, AND ENAMEL) ON EQUIPMENT TO BE GROUNDED ON CONTACT SURFACES TO ENSURE GOOD ELECTRICAL CONTINUITY OR BE CONNECTED BY MEANS OF FITTINGS DESIGNED SO AS TO MAKE SUCH REMOVAL UNNECESSARY.
3. All CONNECTIONS BELOW GRADE SHALL BE EXOTHERMICALLY WELDED
4. SEE DETAIL 5 ON DRAWING NO. E-008 FOR TANK GROUND PENETRATIONS THROUGH SLAB.

GROUNDING AND BONDING KEY NOTES:

1. BURIED GROUNDING RING CONSISTING OF #2 AWG BARE STRANDED COPPER 12" FROM TANK FOUNDATION AND 30" DEEP MINIMUM. (2) 3#4" X 10' COPPER CLAD GROUND RODS AT OPPOSING CORNERS CONNECTED TO GROUNDING RING
2. BOND TANK PER MANUFACTURES SPECIFICATIONS TO GROUND ROD WITH #2 AWG BARE STRANDED COPPER. GROUND WIRE SHALL BE CONTINUOS TO GROUND ROD.
3. BOND STAIRS/FALL PROTECTION/FENCE WITH UL LISTED MECHANICAL GROUNDING CONNECTOR AND #2 AWG BARE STRANDED COPPER CONDUCTOR TO GROUNDING ROD/RING.
4. BOND GATE OPENING WITH #2 AWG BARE STRANDED COPPER. BURRIED 18" DEEP MINIMUM WITH UL LISTED MECHANICAL GROUNDING CONNECTOR.

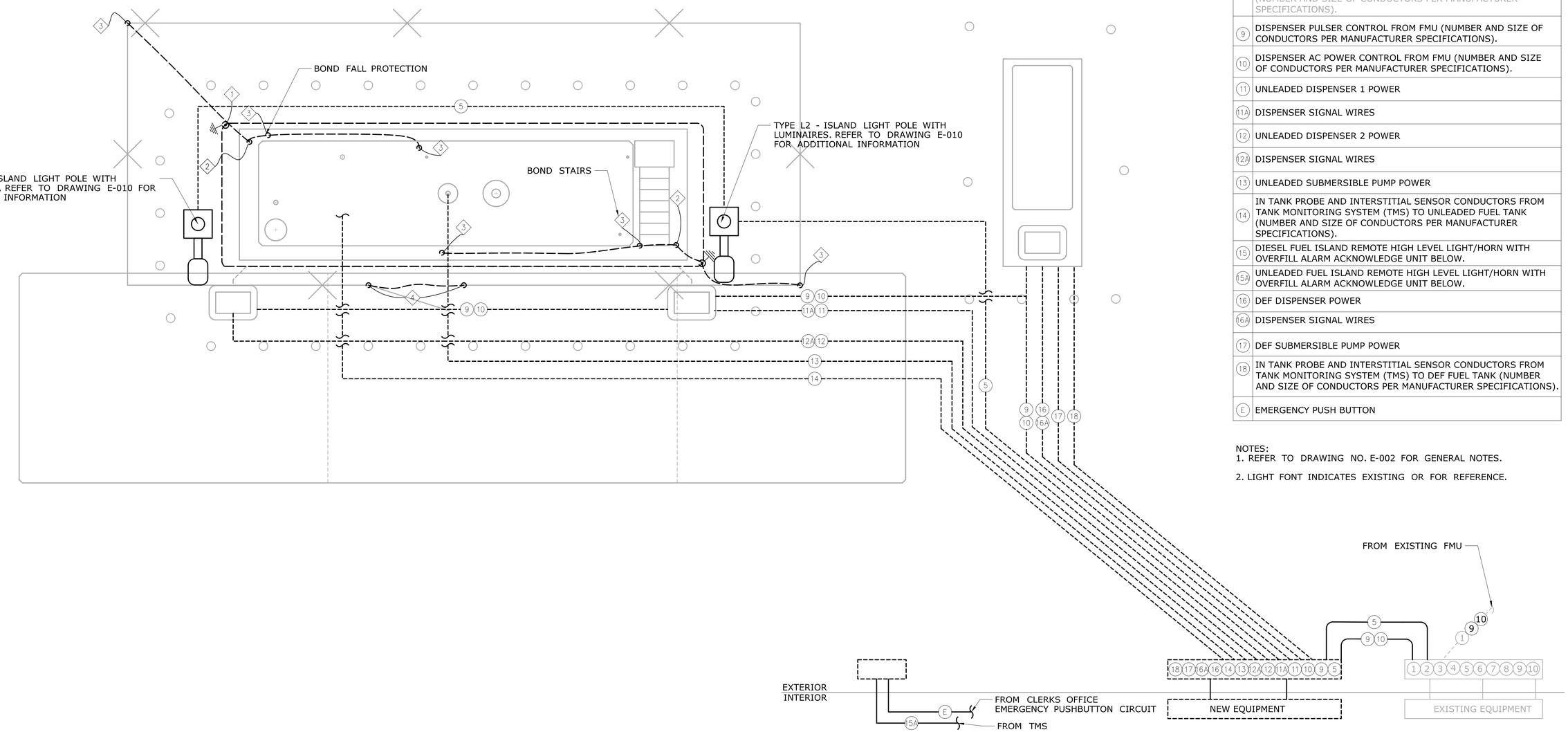

MOTOR FUEL ISLAND CONDUIT CODED NOTES:

1	EXISTING SPARE WITH PULL STRING
2	FMU POWER
3	DIESEL DISPENSER POWER
3A	DISPENSER SIGNAL WIRES
4	DIESEL SUBMERSIBLE PUMP POWER
5	ISLAND LIGHTING POWER
6	SPARE COMMUNICATION CAT-6 CABLE TO FMU
7	FMU AND TANK MONITORING SYSTEM COMMUNICATIONS (4-CONDUCTOR SHIELDED #24 AWG OR AS PER MANUFACTURER SPECIFICATIONS). FMU AND NETWORK COMMUNICATIONS CAT-6 CABLE RATED FOR UNDERGROUND INSTALLATION.
8	IN TANK PROBE AND INTERSTITIAL SENSOR CONDUCTORS FROM TANK MONITORING SYSTEM (TMS) TO DIESEL FUEL TANK (NUMBER AND SIZE OF CONDUCTORS PER MANUFACTURER SPECIFICATIONS).
9	DISPENSER PULSER CONTROL FROM FMU (NUMBER AND SIZE OF CONDUCTORS PER MANUFACTURER SPECIFICATIONS).
10	DISPENSER AC POWER CONTROL FROM FMU (NUMBER AND SIZE OF CONDUCTORS PER MANUFACTURER SPECIFICATIONS).
11	UNLEADED DISPENSER 1 POWER
11A	DISPENSER SIGNAL WIRES
12	UNLEADED DISPENSER 2 POWER
12A	DISPENSER SIGNAL WIRES
13	UNLEADED SUBMERSIBLE PUMP POWER
14	IN TANK PROBE AND INTERSTITIAL SENSOR CONDUCTORS FROM TANK MONITORING SYSTEM (TMS) TO UNLEADED FUEL TANK (NUMBER AND SIZE OF CONDUCTORS PER MANUFACTURER SPECIFICATIONS).
15	DIESEL FUEL ISLAND REMOTE HIGH LEVEL LIGHT/HORN WITH OVERFILL ALARM ACKNOWLEDGE UNIT BELOW.
15A	UNLEADED FUEL ISLAND REMOTE HIGH LEVEL LIGHT/HORN WITH OVERFILL ALARM ACKNOWLEDGE UNIT BELOW.
16	DEF DISPENSER POWER
16A	DISPENSER SIGNAL WIRES
17	DEF SUBMERSIBLE PUMP POWER
18	IN TANK PROBE AND INTERSTITIAL SENSOR CONDUCTORS FROM TANK MONITORING SYSTEM (TMS) TO DEF FUEL TANK (NUMBER AND SIZE OF CONDUCTORS PER MANUFACTURER SPECIFICATIONS).
E	EMERGENCY PUSH BUTTON

NOTES:
1. REFER TO DRAWING NO. E-002 FOR GENERAL NOTES.
2. LIGHT FONT INDICATES EXISTING OR FOR REFERENCE.

REV.	DATE	REVISION DESCRIPTION	SHEET NO.

THE INFORMATION, INCLUDING ESTIMATED QUANTITIES OF WORK, SHOWN ON THESE SHEETS IS BASED ON LIMITED INVESTIGATIONS BY THE STATE AND IS IN NO WAY WARRANTED TO INDICATE THE CONDITIONS OF ACTUAL QUANTITIES OF WORK WHICH WILL BE REQUIRED.

Plotted Date: 9/12/2019

DESIGNER/DRAFTER: JDV
CHECKED BY: MPW
SCALE : NONE

STATE OF CONNECTICUT
DEPARTMENT OF TRANSPORTATION

Filename: ...\FD_MSH_ELE_0172_0466_E-006.dgn

SIGNATURE/BLOCK: OFFICE OF ENGINEERING
APPROVED BY:

PROJECT TITLE: EAST LYME P&FS FACILITY AND NORWICH DAS GARAGE TANK REPLACEMENT

TOWN: NORWICH

DRAWING TITLE: FUEL ISLAND CONDUIT PLAN

PROJECT NO. 0172-0466
DRAWING NO. E-006
SHEET NO. 06.06

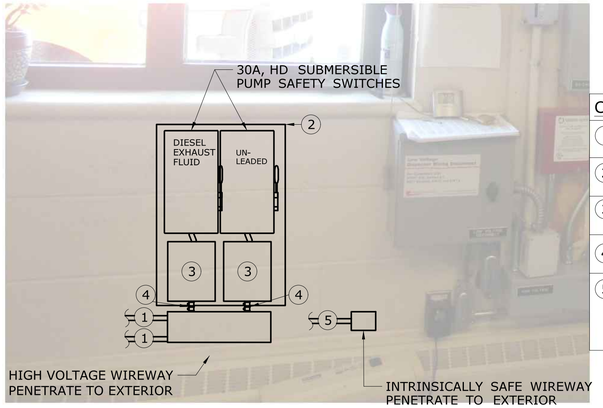

CODED NOTES:	
1	FEEDS FROM DP-1 DROP CONDUIT FROM CEILING AND ROUTE CONDUIT TO HIGH VOLTAGE WIREWAY
2	3/4" MARINE GRADE PLYWOOD BACK BOARD PAINTED WITH TWO COATS WHITE ENAMEL.
3	DEF AND UNLEADED SUBMERSIBLE PUMP CONTROLS RED JACKET ISOTROL 1-8 CONTROL BOX OR APPROVED EQUAL.
4	LINE VOLTAGE CONDUIT, NUMBER AND SIZE OF CONDUITS AS REQUIRED
5	INTRINSICALLY SAFE CONDUIT, NUMBER AND SIZE OF CONDUITS AS REQUIRED, 3/4" MINIMUM. ROUTE CONDUIT TO TMS INTRINSICALLY SAFE PORTION.

1
E-007

CLERK'S OFFICE WALL - FUEL ISLAND CONTROL MODIFICATIONS

NOT TO SCALE

3
E-007

CLERK'S OFFICE WALL - EXISTING EQUIPMENT TO REMAIN

NOT TO SCALE

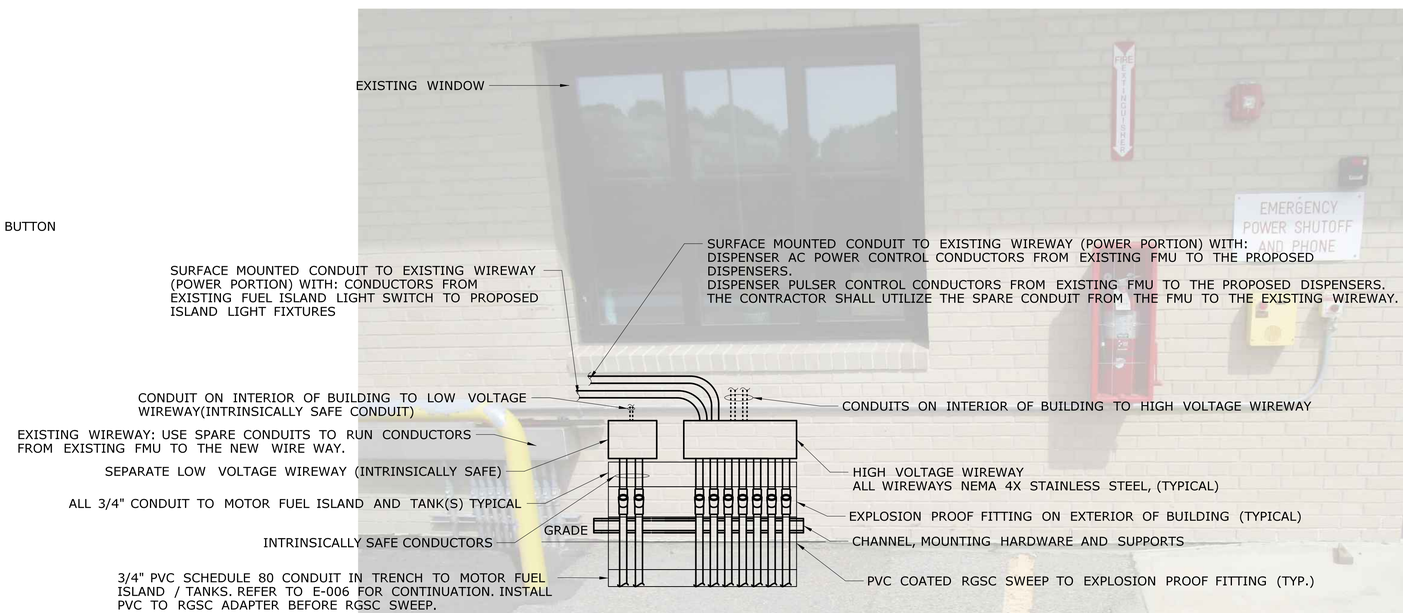

2
E-007

EXTERIOR WALL - PROPOSED WORK

NOT TO SCALE

REV.	DATE	REVISION DESCRIPTION	SHEET NO.

THE INFORMATION, INCLUDING ESTIMATED QUANTITIES OF WORK, SHOWN ON THESE SHEETS IS BASED ON LIMITED INVESTIGATIONS BY THE STATE AND IS IN NO WAY WARRANTED TO INDICATE THE CONDITIONS OF ACTUAL QUANTITIES OF WORK WHICH WILL BE REQUIRED.

Plotted Date: 9/12/2019

DESIGNER/DRAFTER: JDV
CHECKED BY: MPW
SCALE AS NOTED

STATE OF CONNECTICUT
DEPARTMENT OF TRANSPORTATION

Filename: ...\FD_MSH_ELE_0172_0466_E-007.dgn

SIGNATURE/BLOCK: OFFICE OF ENGINEERING
APPROVED BY:

PROJECT TITLE: EAST LYME P&FS FACILITY AND NORWICH DAS GARAGE TANK REPLACEMENT

TOWN: NORWICH

DRAWING TITLE: FUEL ISLAND EQUIPMENT PLAN

PROJECT NO. 0172-0466
DRAWING NO. E-007
SHEET NO. 06.07

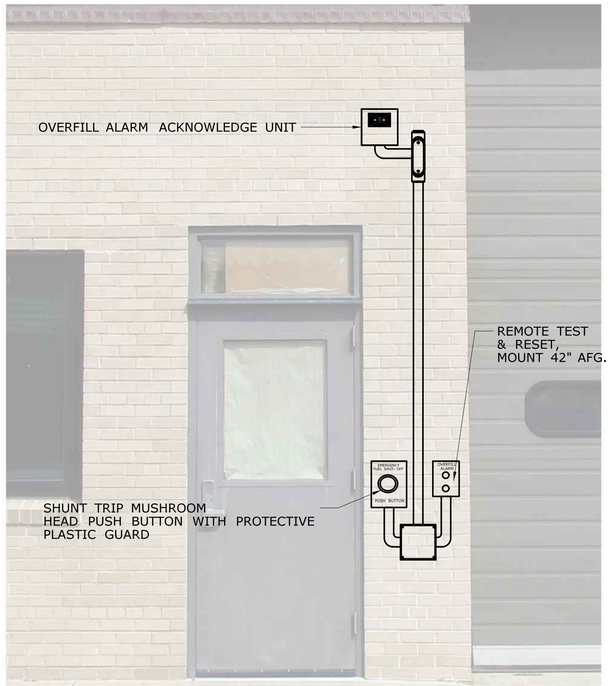

WALL MOUNTED EQUIPMENT DETAIL 1 / E-008

NOT TO SCALE

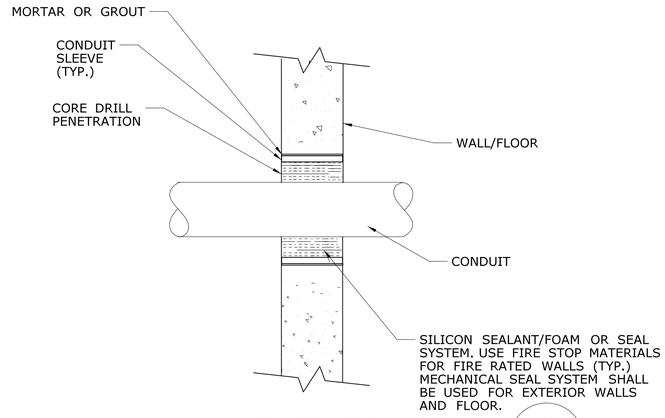

PENETRATION DETAIL 2 / E-008

NOT TO SCALE

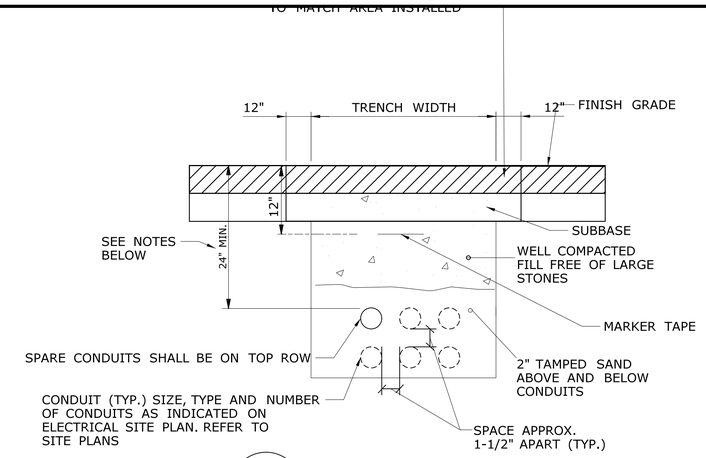

3 / E-008 **CONDUIT TRENCH DETAIL**

NOT TO SCALE

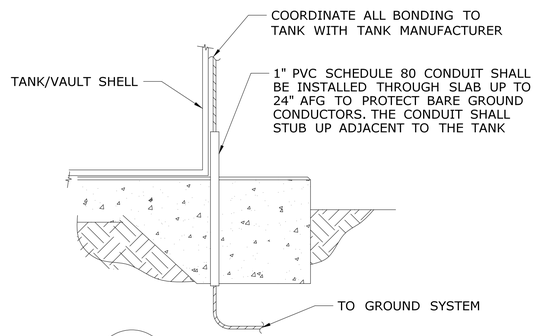

5 / E-008 **TANK GROUNDING DETAIL**

NOT TO SCALE

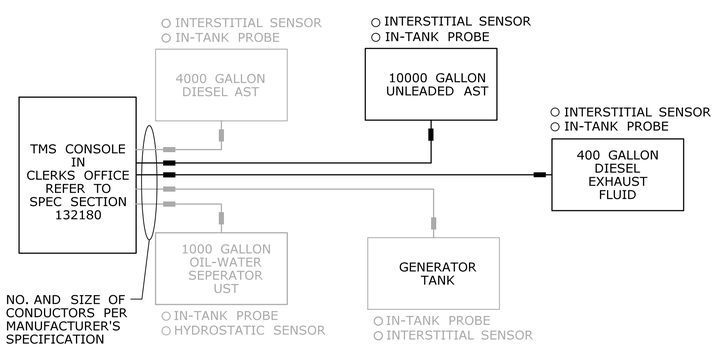

TANK MONITORING SYSTEM BLOCK DIAGRAM 4 / E-008

NOT TO SCALE

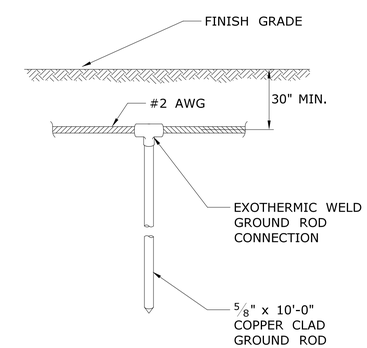

6 / E-008 **GROUND ROD DETAIL**

NOT TO SCALE

REV.	DATE	REVISION DESCRIPTION	SHEET NO.

THE INFORMATION, INCLUDING ESTIMATED QUANTITIES OF WORK, SHOWN ON THESE SHEETS IS BASED ON LIMITED INVESTIGATIONS BY THE STATE AND IS IN NO WAY WARRANTED TO INDICATE THE CONDITIONS OF ACTUAL QUANTITIES OF WORK WHICH WILL BE REQUIRED.

Plotted Date: 9/12/2019

DESIGNER/DRAFTER: JDV

CHECKED BY: MPW

SCALE AS NOTED

STATE OF CONNECTICUT
DEPARTMENT OF TRANSPORTATION

Filename: ...\FD_MSH_ELE_0172_0466_E-008.dgn

SIGNATURE/BLOCK: OFFICE OF ENGINEERING

APPROVED BY:

PROJECT TITLE: EAST LYME P&FS FACILITY AND NORWICH DAS GARAGE TANK REPLACEMENT

TOWN: EAST LYME NORWICH

DRAWING TITLE: MISC DETAILS 1

PROJECT NO. 0172-0466

DRAWING NO. E-008

SHEET NO. 06.08

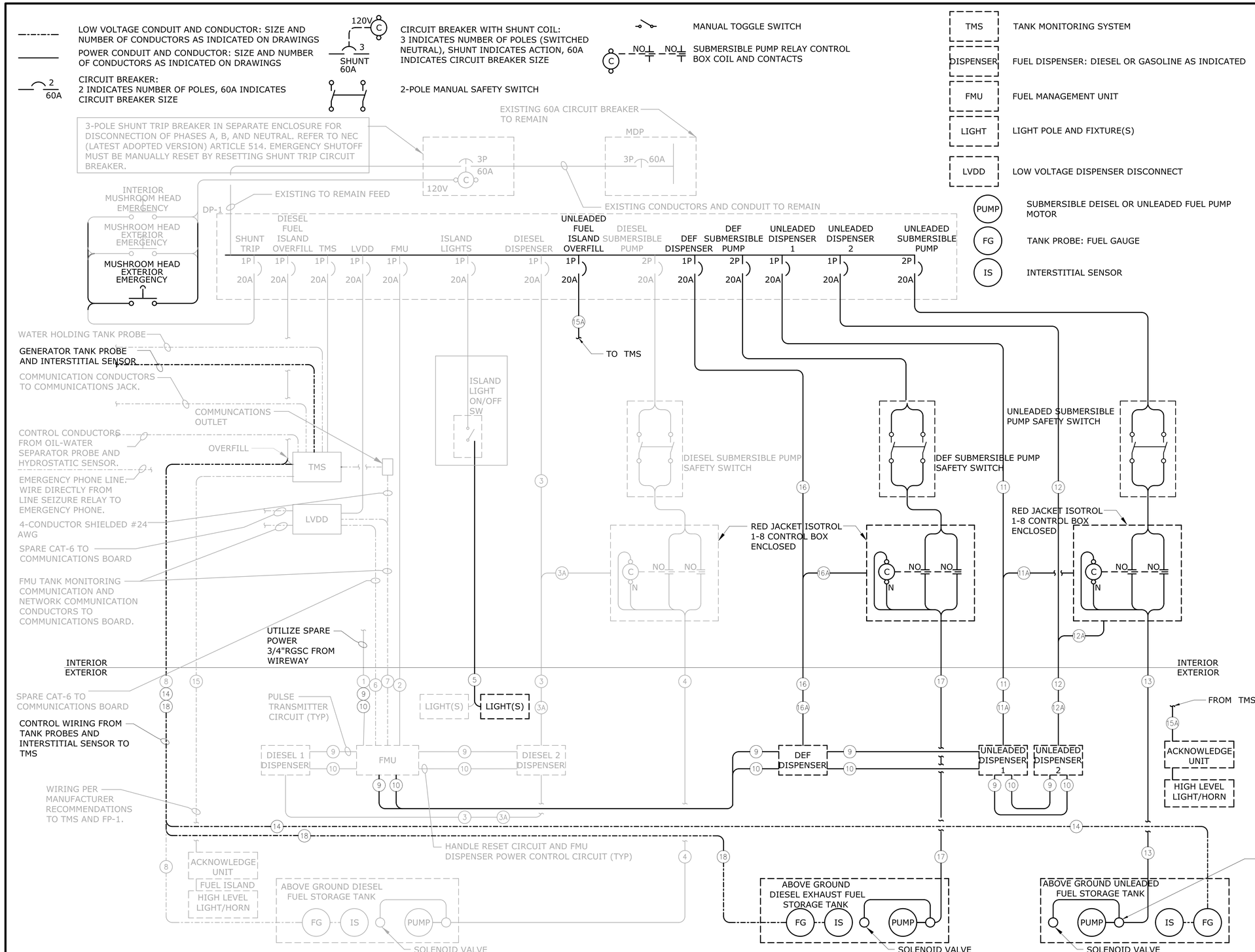

MOTOR FUEL ISLAND CONDUIT CODED NOTES:

1	EXISTING SPARE WITH PULL STRING
2	FMU POWER
3	DIESEL DISPENSER POWER
3A	DISPENSER SIGNAL WIRES
4	DIESEL SUBMERSIBLE PUMP POWER
5	ISLAND LIGHTING POWER
6	SPARE COMMUNICATION CAT-6 CABLE TO FMU
7	FMU AND TANK MONITORING SYSTEM COMMUNICATIONS (4-CONDUCTOR SHIELDED #24 AWG OR AS PER MANUFACTURER SPECIFICATIONS). FMU AND NETWORK COMMUNICATIONS CAT-6 CABLE RATED FOR UNDERGROUND INSTALLATION.
8	IN TANK PROBE AND INTERSTITIAL SENSOR CONDUCTORS FROM TANK MONITORING SYSTEM (TMS) TO DIESEL FUEL TANK (NUMBER AND SIZE OF CONDUCTORS PER MANUFACTURER SPECIFICATIONS).
9	DISPENSER PULSER CONTROL FROM FMU (NUMBER AND SIZE OF CONDUCTORS PER MANUFACTURER SPECIFICATIONS).
10	DISPENSER AC POWER CONTROL FROM FMU (NUMBER AND SIZE OF CONDUCTORS PER MANUFACTURER SPECIFICATIONS).
11	UNLEADED DISPENSER 1 POWER
11A	DISPENSER SIGNAL WIRES
12	UNLEADED DISPENSER 2 POWER
12A	DISPENSER SIGNAL WIRES
13	UNLEADED SUBMERSIBLE PUMP POWER
14	IN TANK PROBE AND INTERSTITIAL SENSOR CONDUCTORS FROM TANK MONITORING SYSTEM (TMS) TO UNLEADED FUEL TANK (NUMBER AND SIZE OF CONDUCTORS PER MANUFACTURER SPECIFICATIONS).
15	DIESEL FUEL ISLAND REMOTE HIGH LEVEL LIGHT/HORN WITH OVERFILL ALARM ACKNOWLEDGE UNIT BELOW.
15A	UNLEADED FUEL ISLAND REMOTE HIGH LEVEL LIGHT/HORN WITH OVERFILL ALARM ACKNOWLEDGE UNIT BELOW.
16	DEF DISPENSER POWER
16A	DISPENSER SIGNAL WIRES
17	DEF SUBMERSIBLE PUMP POWER
18	IN TANK PROBE AND INTERSTITIAL SENSOR CONDUCTORS FROM TANK MONITORING SYSTEM (TMS) TO DEF FUEL TANK (NUMBER AND SIZE OF CONDUCTORS PER MANUFACTURER SPECIFICATIONS).

NOTES:
1. REFER TO DRAWING NO. E-002 FOR GENERAL NOTES.
2. LIGHT FONT INDICATES EXISTING OR FOR REFERENCE.

REV.	DATE	REVISION DESCRIPTION	SHEET NO.

THE INFORMATION, INCLUDING ESTIMATED QUANTITIES OF WORK, SHOWN ON THESE SHEETS IS BASED ON LIMITED INVESTIGATIONS BY THE STATE AND IS IN NO WAY WARRANTED TO INDICATE THE CONDITIONS OF ACTUAL QUANTITIES OF WORK WHICH WILL BE REQUIRED.

Plotted Date: 9/12/2019

DESIGNER/DRAFTER: JDV
CHECKED BY: MPW
SCALE AS NOTED

STATE OF CONNECTICUT
DEPARTMENT OF TRANSPORTATION

Filename: ...\FD_MSH_ELE_0172_0466_E-009.dgn

SIGNATURE/BLOCK: OFFICE OF ENGINEERING
APPROVED BY:

PROJECT TITLE: EAST LYME P&FS FACILITY AND NORWICH DAS GARAGE TANK REPLACEMENT

TOWN: NORWICH

DRAWING TITLE: ONE LINE DIAGRAM

PROJECT NO. 0172-0466
DRAWING NO. E-009
SHEET NO. 06.09

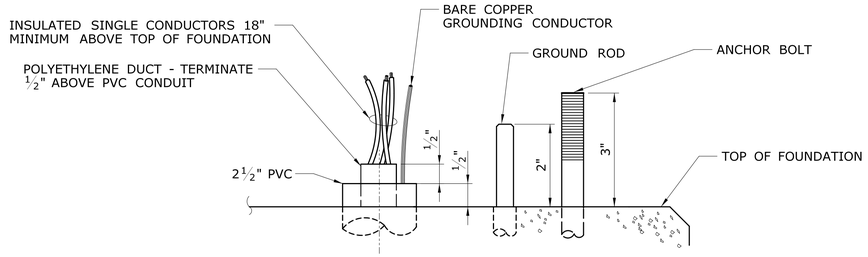

1 E-010 CABLE IN DUCT TERMINATION AT LIGHT STANDARD BASE

NOT TO SCALE

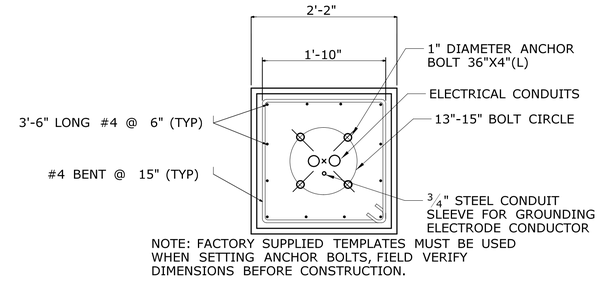

NOTE: FACTORY SUPPLIED TEMPLATES MUST BE USED WHEN SETTING ANCHOR BOLTS, FIELD VERIFY DIMENSIONS BEFORE CONSTRUCTION.

2 E-010 ISLAND LIGHT POLE BASE PLATE

NOT TO SCALE

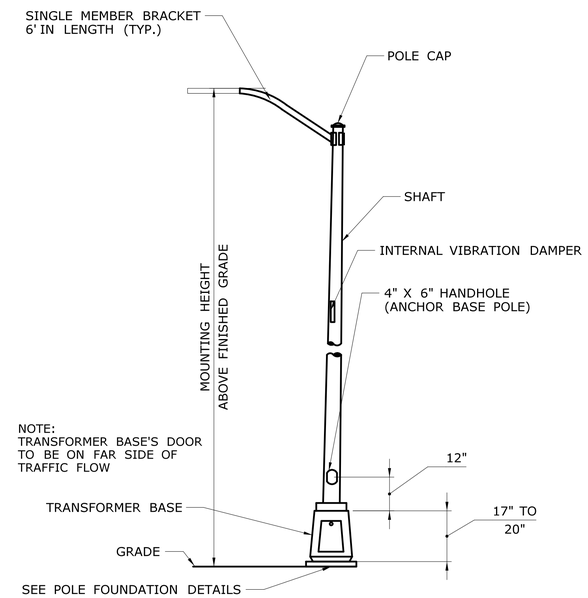

3 E-010 ISLAND LIGHT FIXTURE DETAIL

NOT TO SCALE

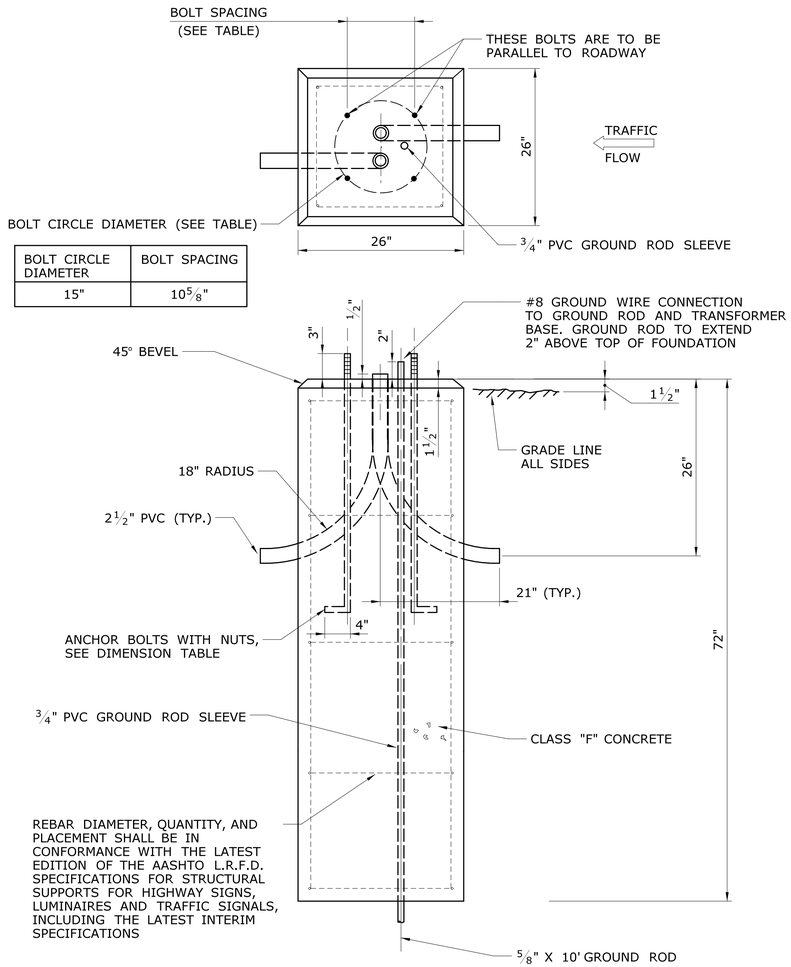

BOLT CIRCLE DIAMETER	BOLT SPACING
15"	10 5/8"

4 E-010 LIGHT STANDARD FOUNDATION - TYPE I

NOT TO SCALE

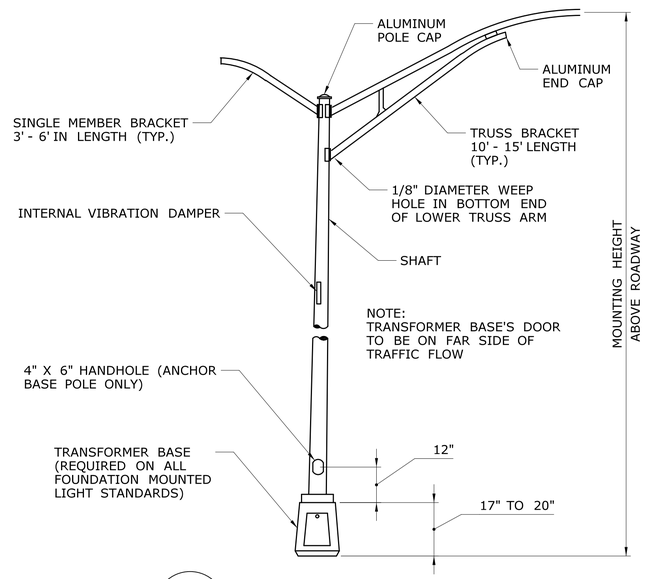

5 E-010 ALUMINUM LIGHT STANDARD

NOT TO SCALE

ALUMINUM LIGHT STANDARD - DIMENSION TABLE							
MOUNTING HEIGHT	BRACKET LENGTH	SHAFT DIAMETER		SHAFT WALL THICKNESS	BASE TYPE	ANCHOR BOLT SIZE	BOLT CIRCLE DIAMETER
		BOTTOM	TOP				
30'	TWIN 12'	8"	6"	0.312"	TRANSFORMER	1" X 40"	15"
30'	12'	8"	6"	0.188"	TRANSFORMER	1" X 40"	15"

LIGHT STANDARD NOTES:

1) ALUMINUM ALLOY SHALL BE 6063, T6 TEMPER.

2) BOLT CIRCLE SHOWN IS FOR ANCHOR BASE BOTTOM OR TRANSFORMER BASE BOTTOM (WHICHEVER IS APPLICABLE).

3) TO BE DESIGNED TO AASHTO "STANDARD SPECIFICATION FOR STRUCTURAL SUPPORTS FOR HIGHWAY SIGNS, LUMINAIRES AND TRAFFIC SIGNALS" FOR 90 M.P.H. WINDS.

4) WELDING DESIGN AND FABRICATION SHALL CONFORM TO THE LATEST EDITION OF THE ANSI/AWS D1.2, STRUCTURAL WELDING CODE - ALUMINUM.

5) FOR BASE CONNECTION WELDS, FABRICATION INSPECTION AND TESTING SHALL BE PERFORMED AS NECESSARY PRIOR TO ASSEMBLY, DURING ASSEMBLY, DURING WELDING, AND AFTER WELDING, TO ENSURE THAT MATERIALS AND WORKMANSHIP MEET THE REQUIREMENTS OF THE CONTRACT DOCUMENTS. FABRICATION INSPECTION AND TESTING IS THE RESPONSIBILITY OF THE CONTRACTOR. VERIFICATION INSPECTION AND TESTING IS THE PREROGATIVE OF THE ENGINEER (CONNDOT).

6) NON-DESTRUCTIVE TESTING FOR ALUMINUM SHALL BE AS FOLLOWS: A RANDOM 25% OF ALL BASE CONNECTION WELDS SHALL BE INSPECTED IN ACCORDANCE WITH ASTM E-165 STANDARD PRACTICE FOR LIQUID PENETRANT INSPECTION METHOD.

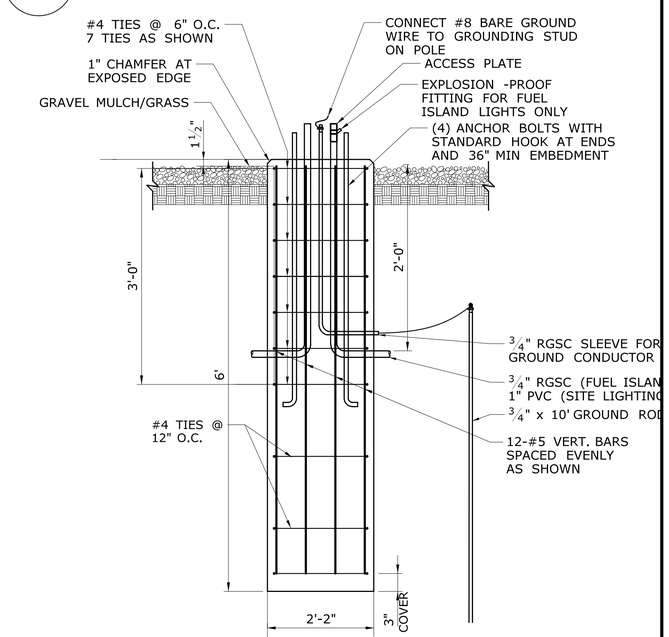

6 E-010 ISLAND LIGHT POLE FOUNDATION DETAIL

NOT TO SCALE

REV.	DATE	REVISION DESCRIPTION	SHEET NO.

THE INFORMATION, INCLUDING ESTIMATED QUANTITIES OF WORK, SHOWN ON THESE SHEETS IS BASED ON LIMITED INVESTIGATIONS BY THE STATE AND IS IN NO WAY WARRANTED TO INDICATE THE CONDITIONS OF ACTUAL QUANTITIES OF WORK WHICH WILL BE REQUIRED.

Plotted Date: 9/12/2019

DESIGNER/DRAFTER: JDV
CHECKED BY: MPW
SCALE AS NOTED

STATE OF CONNECTICUT
DEPARTMENT OF TRANSPORTATION

Filename: ...\FD_MSH_ELE_0172_0466_E-010.dgn

SIGNATURE/BLOCK:
OFFICE OF ENGINEERING
APPROVED BY:

PROJECT TITLE:
EAST LYME P&FS FACILITY AND NORWICH DAS GARAGE TANK REPLACEMENT

TOWN: NORWICH

DRAWING TITLE:
ROADWAY AND ISLAND LIGHTING DETAILS

PROJECT NO. 0172-0466
DRAWING NO. E-010
SHEET NO. 06.10

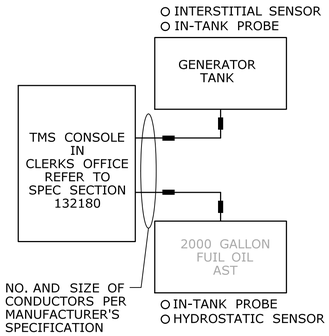

EAST LYME
TANK MONITORING SYSTEM
BLOCK DIAGRAM

NOT TO SCALE

1
E-011

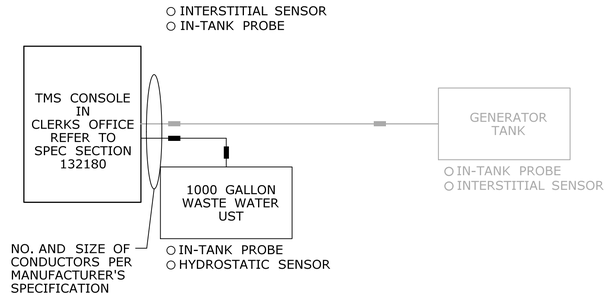

DAS GARAGE
TANK MONITORING SYSTEM
BLOCK DIAGRAM

NOT TO SCALE

2
E-011

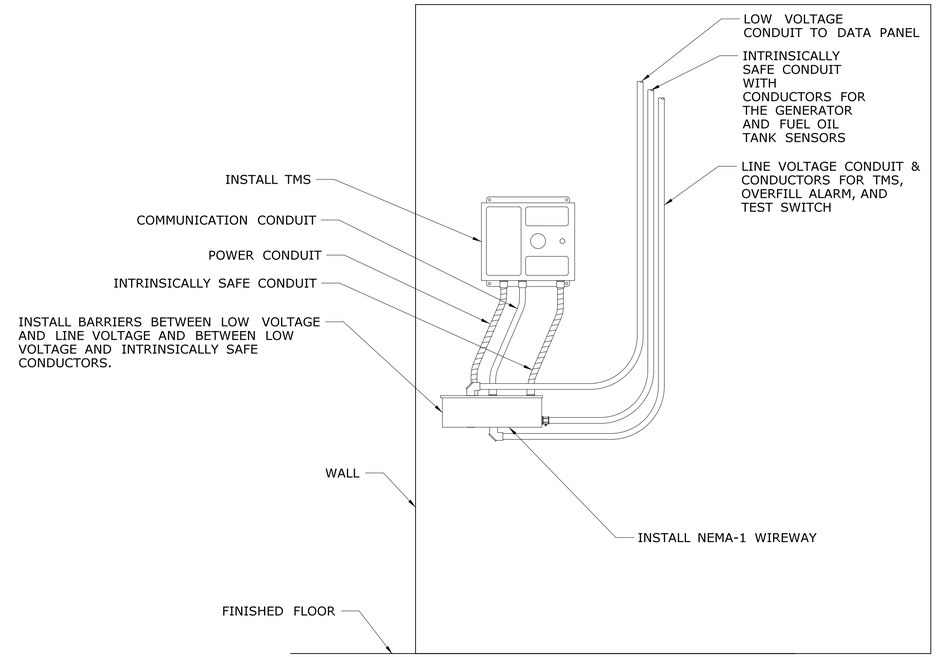

EAST LYME TMS EQUIPMENT

NOT TO SCALE

3
E-011

NOTE:
1. INSTALL TANK MONITORING SYSTEM 48" AFF TO CENTER OF EQUIPMENT.

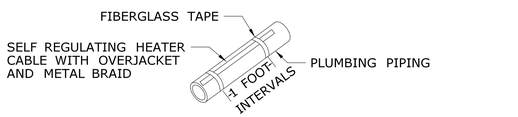

THE CABLE SHOULD FIT SNUGLY AGAINST THE PIPE AND BE SECURED AT ONE (1) FOOT INTERVALS, AS SHOWN (TYP).

WARNING
TO PREVENT POSSIBLE DAMAGE TO THE HEATING CABLE, DO NOT FASTEN WITH METAL STRAPS, WIRE, VINYL ELECTRICAL TAPE OR DUCT TAPE.

HEATER CABLE INSTALLATION

NOT TO SCALE

4
E-011

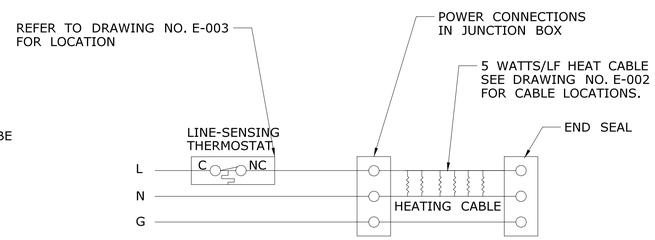

TERMINAL BLOCK CONNECTION

NOT TO SCALE

5
E-011

NOTE:
CONDUIT STUB-UP DETAIL SHALL APPLY TO EXISTING- TO-REMAIN SLAB/WALL INSTALLATIONS AND INSTALLATIONS THAT REQUIRE EXPLOSION PROOF FITTING MOUNTED TO THE EXTERIOR OF THE BUILDING. CONDUIT ENTRANCES FOR NEW CONSTRUCTION SHALL SWEEP UNDER GRADE INTO THE BUILDING.

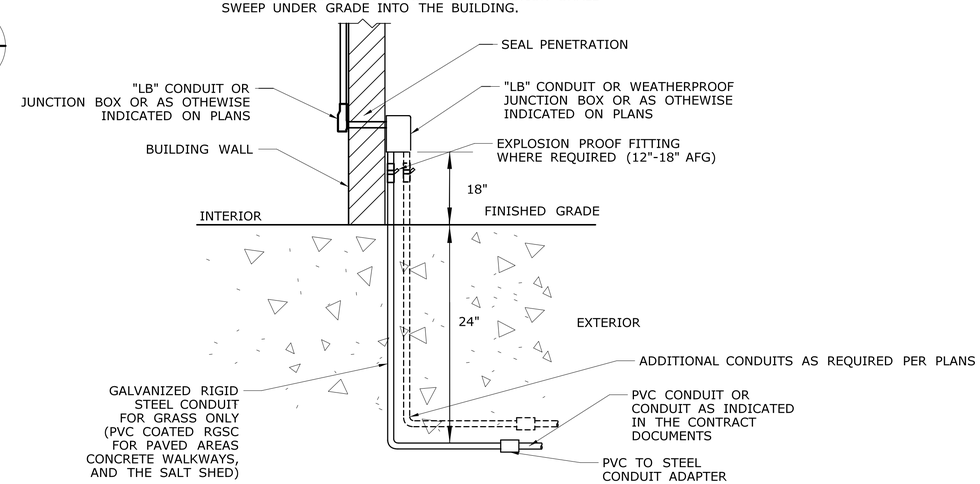

CONDUIT STUB-UP DETAIL

NOT TO SCALE

7
E-011

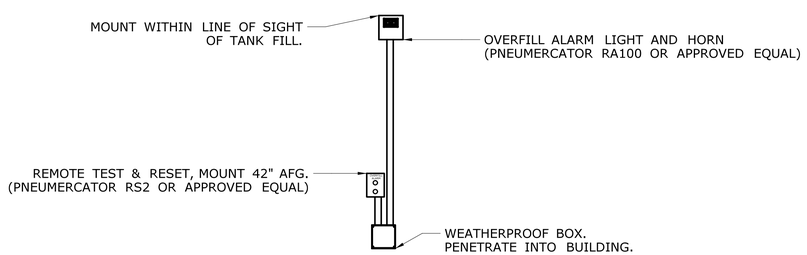

6
E-011

OVERFILL ALARM DETAIL

NOT TO SCALE

REV.	DATE	REVISION DESCRIPTION	SHEET NO.

THE INFORMATION, INCLUDING ESTIMATED QUANTITIES OF WORK, SHOWN ON THESE SHEETS IS BASED ON LIMITED INVESTIGATIONS BY THE STATE AND IS IN NO WAY WARRANTED TO INDICATE THE CONDITIONS OF ACTUAL QUANTITIES OF WORK WHICH WILL BE REQUIRED.

Plotted Date: 9/12/2019

DESIGNER/DRAFTER: JDV
CHECKED BY: MPW
SCALE AS NOTED

STATE OF CONNECTICUT
DEPARTMENT OF TRANSPORTATION

Filename: ...\FD_MSH_ELE_0172_0466_E-011.dgn

SIGNATURE/BLOCK:
OFFICE OF ENGINEERING
APPROVED BY:

PROJECT TITLE:
EAST LYME P&FS FACILITY AND NORWICH DAS GARAGE TANK REPLACEMENT

TOWN:
EAST LYME NORWICH

DRAWING TITLE:
MISC DETAILS 2

PROJECT NO. 0172-0466
DRAWING NO. E-011
SHEET NO. 06.11