03 - ARCHITECTURAL
INDEX OF DRAWINGS

DRAWING NUMBER	DRAWING TITLE	DRAWING NUMBER	DRAWING TITLE
A-000	INDEX OF DRAWINGS		
A-001	STAFFORD PLANS AND ELEVATIONS		
A-002	UNION PLANS AND ELEVATIONS		
A-003	VERNON PLANS AND ELEVATIONS		
A-004	ENLARGED DETAILS		
A-005	ENLARGED DETAILS		
A-006	ENLARGED DETAILS - UNION TRUSS PLATES		

THE DESIGN APPEARS TO CONFORM TO APPLICABLE CRITERIA. APPROVAL IS NOT TO BE CONSTRUED TO MEAN THAT ALL ASPECTS OF THE DESIGN HAVE BEEN PERSONALLY CHECKED BY THE UNDERSIGNED.

Christopher J. Bonsignore, P.E.
2019.10.01 15:36:15-04'00'

TRANSPORTATION PRINCIPAL ENGINEER

REV.	DATE	REVISION DESCRIPTION	SHEET NO.

THE INFORMATION, INCLUDING ESTIMATED QUANTITIES OF WORK, SHOWN ON THESE SHEETS IS BASED ON LIMITED INVESTIGATIONS BY THE STATE AND IS IN NO WAY WARRANTED TO INDICATE THE CONDITIONS OF ACTUAL QUANTITIES OF WORK WHICH WILL BE REQUIRED.

Plotted Date: 10/1/2019

DESIGNER/DRAFTER: MLM

CHECKED BY: SMM

STATE OF CONNECTICUT
DEPARTMENT OF TRANSPORTATION

Filename: ...\FD_MSH_ARC_171_429_A000.dgn

SIGNATURE/BLOCK:
OFFICE OF ENGINEERING

APPROVED BY:

PROJECT TITLE:
THE REHABILITATION OF THE SALT SHEDS

TOWN:
STAFFORD, UNION, VERNON

DRAWING TITLE:
INDEX OF DRAWINGS

PROJECT NO. 0171-0429

DRAWING NO. A-000

SHEET NO. 03.00

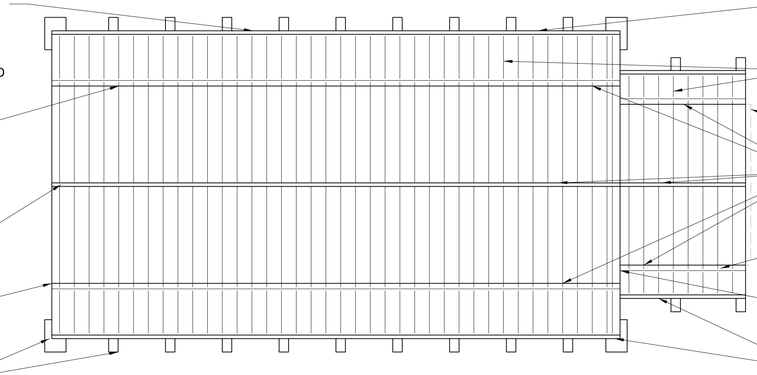

ROOF PLAN

SCALE 3/32" = 1'-0"

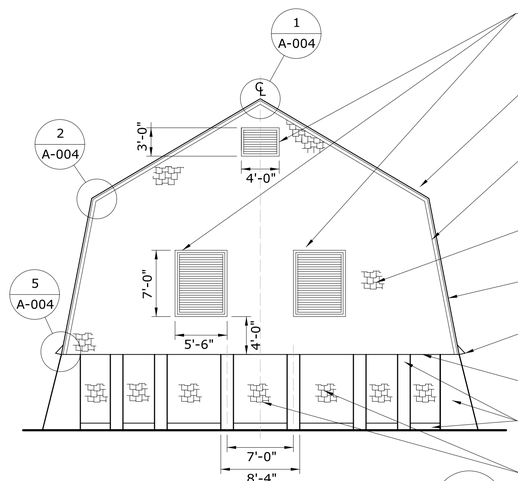

REAR ELEVATION

SCALE 1/8" = 1'-0"

3 A-001

STAIN UNDERSIDE OF EXISTING SOFFIT. (TYP.)

STAIN ALL EXISTING WOOD LOUVERS AND TRIM. INSTALL BIRD SCREEN AT BOTH SIDES. INSTALL SPACERS BETWEEN BLADES AT CENTER. REFER TO NOTE 7.

SNOW RETENTION SYSTEM AT EACH SIDE NOT SHOWN, INSTALL 2 X 10 BLOCKING. REFER TO DETAIL 4/A-004.

REMOVE EXISTING WOOD TRIM. INSTALL SYNTHETIC LUMBER (TYP). MATCH EXISTING PROFILE.

STAIN ALL CEDAR SHINGLES, TYP. REFER TO NOTE 6.

METAL EDGE, COLOR SHALL MATCH PVC ROOF. (TYP.) REFER TO DETAIL 9/A-004.

WATER SHIELD. REFER TO DETAIL 5/A-004.

STAIN UNDERSIDE OF EXISTING SOFFIT. (TYP.)

EXISTING CONCRETE CURB AND PILASTERS (TYP.)

REMOVE EXISTING CEDAR SHINGLES ALONG BOTTOM THREE ROWS OF SIDE AND REAR BAYS. INSTALL CEDAR SHINGLES WHERE REMOVED AND AT ALL OTHER LOCATIONS WHERE MISSING/DAMAGED. REFER TO NOTE 6.

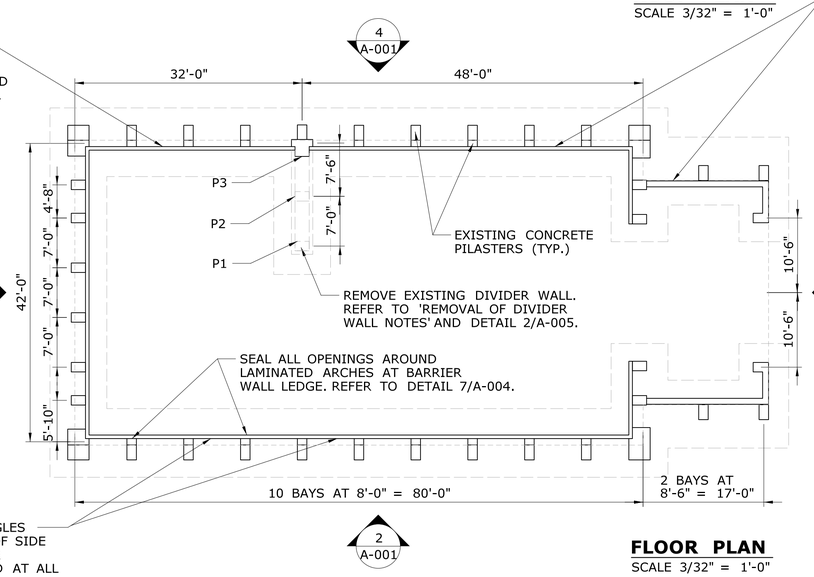

FLOOR PLAN

SCALE 3/32" = 1'-0"

REMOVE EXISTING CEDAR SHINGLES ALONG BOTTOM THREE ROWS OF ALL SIDE BAYS. INSTALL CEDAR SHINGLES WHERE REMOVED AND AT ALL OTHER LOCATIONS WHERE MISSING/DAMAGED. REFER TO NOTE 6.

REMOVE EXISTING WOOD CANOPY. REFER TO NOTE 5.

SNOW RETENTION SYSTEM AT ALL SIDES NOT SHOWN, INSTALL 2 X 10 BLOCKING. REFER TO DETAIL 4/A-004.

REMOVE EXISTING WOOD TRIM. INSTALL SYNTHETIC LUMBER (TYP). MATCH EXISTING PROFILE.

METAL EDGE, COLOR SHALL MATCH PVC ROOF. (TYP.) REFER TO DETAIL 9/A-004.

PAINT EXISTING WOOD TRIM AT OPENING.

EXISTING LOUVERS, BEYOND.

WATER SHIELD. REFER TO DETAIL 5/A-004.

STAIN ALL CEDAR SHINGLES. REFER TO NOTE 6

STAIN UNDERSIDE OF EXISTING SOFFIT. (TYP.)

EXISTING CONCRETE CURB AND PILASTERS (TYP.)

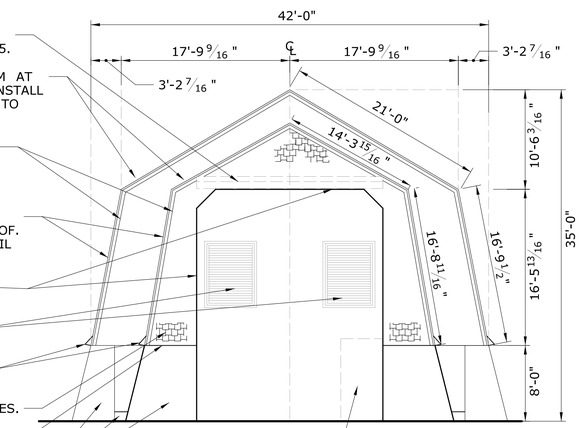

REMOVE EXISTING DIVIDER WALL BEYOND. REFER TO FLOOR PLAN.

FRONT ELEVATION

SCALE 1/8" = 1'-0"

1 A-001

REMOVAL OF DIVIDER WALL NOTES:

1. REMOVE TIMBER WALL BY UNBOLTING INDIVIDUAL PLANKS FROM ATTACHMENT.
2. SAW-CUT AND REMOVE BITUMINOUS CONCRETE AROUND DIVIDER WALL. LIMITS OF SAW-CUT SHALL EXTEND 24" AROUND DIVIDER WALL. AT POSTS P1 AND P2 EXCAVATE TO BOTTOM OF PAVEMENT STRUCTURE, TYPICALLY 16" BELOW EXISTING BITUMINOUS CONCRETE.
3. CUT AND REMOVE EXISTING CONCRETE POSTS MARKED P1 AND P2 TO THE BOTTOM OF PAVEMENT STRUCTURE, TYPICALLY 16" BELOW THE EXISTING BITUMINOUS CONCRETE.
4. THE EXISTING CONCRETE POST P3 TO REMAIN, CUT ALL ATTACHMENT BOLTS AS CLOSE TO THE CONCRETE FACE AS POSSIBLE AFTER REMOVING TIMBER PLANKS.
5. REPAIR BITUMINOUS CONCRETE PER DETAIL "BITUMINOUS CONCRETE PATCHING - FULL DEPTH" IN SHEET A-005.

PVC "STANDING SEAM" PROFILE (EXTRUSION) MEMBRANE ROOF SYSTEM, REFER TO DETAIL 3/A-004.

ROOF TRANSITION, REFER TO DETAIL 2/A-004.

STAIN ALL CEDAR SHINGLES, TRIM AND UNDERSIDE OF SOFFITS. (TYP.) REFER TO NOTE 6.

REMOVE EXISTING CEDAR SHINGLES ALONG BOTTOM THREE ROWS OF ALL SIDE BAYS. INSTALL CEDAR SHINGLES WHERE REMOVED AND AT ALL OTHER LOCATIONS WHERE MISSING/DAMAGED. REFER TO NOTE 6.

EXISTING CONCRETE CURB AND PILASTERS (TYP.)

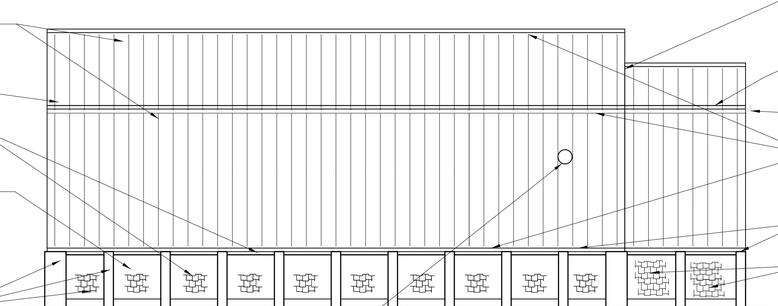

EXISTING LIGHT FIXTURE REMOVED BY OTHERS. REFER TO NOTE 3.

SIDE ELEVATION

SCALE 3/32" = 1'-0"

2 A-001 | 4 A-001

ROOF TO WALL FLASHING AT CONNECTION TO LOWER ROOF, REFER TO DETAIL 1/A-005.

SNOW RETENTION SYSTEM, INSTALL 2 X 10 BLOCKING. REFER TO DETAIL 4/A-004.

REMOVE EXISTING WOOD CANOPY, REFER TO NOTE 5.

HOT-AIR WELD PVC FLASHING STRIP LAP SECTIONS TO ALIGN HORIZONTALLY.

WATER SHIELD, REFER TO DETAIL 5/A-004.

REMOVE EXISTING SHINGLES UNDERLAYMENT AND PLYWOOD SUBSTRATE AS REQUIRED. INSTALL SUBSTRATE, UNDERLAYMENT AND CEDAR SHINGLES WHERE REMOVED AND AT ALL OTHER LOCATIONS WHERE MISSING/DAMAGED. REFER TO NOTE 6.

NOTES

1. CONTRACTOR SHALL VERIFY IN THE FIELD ALL DIMENSIONS AND CONDITIONS.
2. ALL ITEMS ON PLANS ARE PROPOSED UNLESS LABELED EXISTING.
3. ELECTRICAL APPURTENANCES ARE NOT SHOWN. LIGHT FIXTURES, ELECTRICAL CONDUIT AND BRACKETS SHALL BE REMOVED BY OTHERS FOR CONSTRUCTION. ALL FIXTURES SHALL BE REINSTALLED BY OTHERS AT THE COMPLETION OF CONSTRUCTION.
4. REMOVE AND DISCARD EXISTING ASPHALT ROOF SHINGLES AND VAPOR BARRIER.
5. INSTALL CEDAR SHINGLES, 20 OZ COPPER DRIP EDGE, UNDERLAYMENT, SHEATHING AND BLOCKING TO IN-FILL WHERE CANOPY WAS REMOVED.
6. REPLACE ALL MISSING AND DAMAGED SHINGLES WITH APPROXIMATELY 8 SQUARES OF CEDAR SHINGLES, STAIN.
7. ALL EXISTING AND RETROFIT WOOD LOUVERS AND TRIM SHALL BE STAINED TO MATCH CEDAR SHINGLES.
8. SECURE EXISTING PLYWOOD SUBSTRATE WHERE APPLICABLE TO ACCEPT PROPOSED PVC ROOFING SYSTEM.
9. CONTRACTOR SHALL INSTALL FULL LENGTH PVC EXTRUSIONS. IF REQUIRED, INSTALL SHORTER SECTIONS ONLY AT ROOF TRANSITION.
10. ALL SALT SHED DEMOLITION SHALL BE PAID FOR UNDER THE MLSI. REFER TO SPECIFICATION SECTION 300000.
11. DESIGN LIVE LOADS ARE 53 PSF OVER HALF OF THE ROOF AND 43 PSF OVER THE ENTIRE ROOF.

REV.	DATE	REVISION DESCRIPTION	SHEET NO.

THE INFORMATION, INCLUDING ESTIMATED QUANTITIES OF WORK, SHOWN ON THESE SHEETS IS BASED ON LIMITED INVESTIGATIONS BY THE STATE AND IS IN NO WAY WARRANTED TO INDICATE THE CONDITIONS OF ACTUAL QUANTITIES OF WORK WHICH WILL BE REQUIRED.

Plotted Date: 10/1/2019

DESIGNER/DRAFTER: MLM

CHECKED BY: SMM

SCALE AS NOTED

STATE OF CONNECTICUT
DEPARTMENT OF TRANSPORTATION

Filename: ...\FD_MSH_ARC_171_429_A001_Stafford.dgn

SIGNATURE/BLOCK: OFFICE OF ENGINEERING

APPROVED BY:

PROJECT TITLE: THE REHABILITATION OF THE SALT SHEDS

TOWN: STAFFORD, UNION, VERNON

DRAWING TITLE: STAFFORD PLANS AND ELEVATIONS

PROJECT NO. 0171-0429

DRAWING NO. A-001

SHEET NO. 03.01

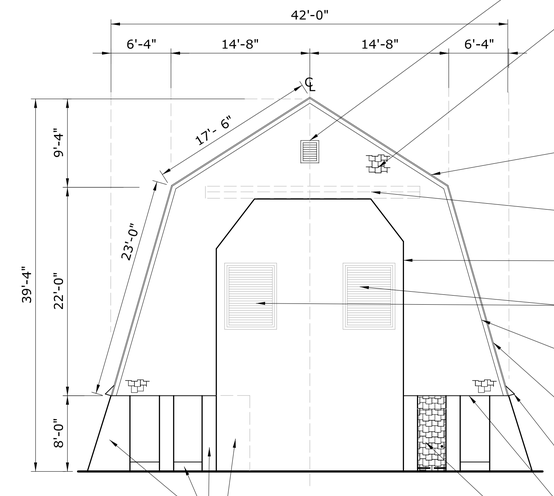

EXISTING CONCRETE CURB AND PILASTERS (TYP.)

REMOVE EXISTING DIVIDER WALL BEYOND. REFER TO FLOOR PLAN.

FRONT ELEVATION 1 / A-002

SCALE: 1/8" = 1'-0"

EXISTING ELECTRICAL CONDUIT REMOVED BY OTHERS. REFER TO NOTE 3.

PVC "STANDING SEAM" PROFILE (EXTRUSION) MEMBRANE ROOF SYSTEM. REFER TO DETAIL 3/A-004.

RIDGE, REFER TO DETAIL 1/A-004

REMOVE EXISTING WOOD CANOPY. REFER TO NOTE 5.

WATER SHIELD. (TYP.) REFER TO DETAIL 5/A-004.

STAIN ALL EXISTING WOOD LOUVERS AND TRIM. INSTALL BIRD SCREEN AT BOTH SIDES. REFER TO NOTE 7.

STAIN ALL CEDAR SHINGLES. (TYP.) REFER TO NOTE 6.

STAIN TRIM AND UNDERSIDE OF EXISTING SOFFIT. (TYP.)

EXISTING ELECTRICAL CONDUIT REMOVED BY OTHERS. REFER TO NOTE 3.

SNOW RETENTION SYSTEM AT EACH SIDE NOT SHOWN. INSTALL 2 X 10 BLOCKING. REFER TO DETAIL 4/A-004.

REMOVE EXISTING WOOD CANOPY. REFER TO NOTE 5.

PAINT EXISTING WOOD TRIM AT OPENING.

TWO WOOD LOUVERS RETROFIT BEYOND. REFER TO ELEVATION 3/A-002.

REMOVE EXISTING WOOD TRIM. INSTALL SYNTHETIC LUMBER (TYP.) MATCH EXISTING PROFILE.

METAL EDGE, COLOR SHALL MATCH PVC ROOF (TYP.) REFER TO DETAIL 9/A-004.

WATER SHIELD. REFER TO DETAIL 5/A-004

STAIN UNDERSIDE OF EXISTING SOFFIT. (TYP.)

REMOVE EXISTING PERSONNEL DOOR. RETROFIT WITH CEDAR SHINGLES. REFER TO DETAIL 8/A-004.

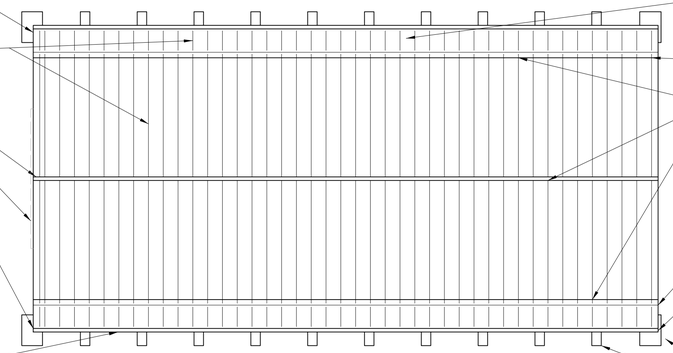

ROOF PLAN

SCALE: 3/32" = 1'-0"

REMOVE FIRST ROW OF DAMAGED PLYWOOD SUBSTRATE AT TOP OF ADJACENT BARRIER WALL LEDGE. REMOVE SUBSTRATE IN FULL SHEETS. INSTALL SUBSTRATE WHERE REMOVED.

SNOW RETENTION SYSTEM, INSTALL 2 X 10 BLOCKING. REFER TO DETAIL 4/A-004.

HOT-AIR WELD PVC FLASHING STRIP LAP SECTIONS TO ALIGN HORIZONTALLY.

ROOF TRANSITION (TYP.) REFER TO DETAIL 2/A-004.

ELECTRICAL CONDUIT ALONG TRIM EDGE. REFER TO NOTE 3.

STAIN ALL CEDAR (TYP.) SHINGLES. REFER TO NOTE 6.

STAIN EXISTING WOOD LOUVERS AND TRIM. INSTALL BIRD SCREEN AT BOTH SIDES. REFER TO NOTE 7.

EXISTING CONCRETE PILASTERS (TYP.)

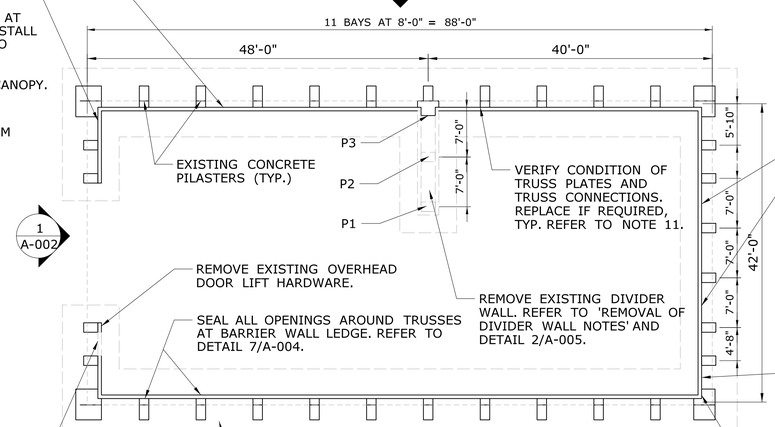

EXISTING CONCRETE PILASTERS (TYP.)

VERIFY CONDITION OF TRUSS PLATES AND TRUSS CONNECTIONS. REPLACE IF REQUIRED, TYP. REFER TO NOTE 11.

REMOVE EXISTING OVERHEAD DOOR LIFT HARDWARE.

SEAL ALL OPENINGS AROUND TRUSSES AT BARRIER WALL LEDGE. REFER TO DETAIL 7/A-004.

REMOVE EXISTING DIVIDER WALL. REFER TO 'REMOVAL OF DIVIDER WALL NOTES' AND DETAIL 2/A-005.

REMOVE WIRE MESH FENCE FOR CONSTRUCTION. FENCE SHALL BE MODIFIED AND REINSTALLED TO FIT AROUND WATER SHIELD. REFER TO NOTE 10.

FLOOR PLAN

SCALE: 3/32" = 1'-0"

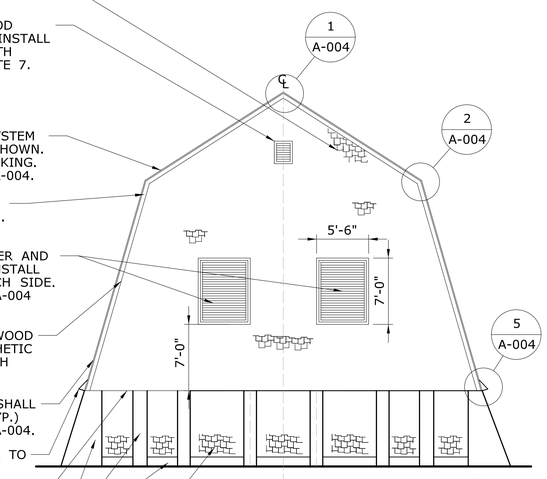

SNOW RETENTION SYSTEM AT EACH SIDE NOT SHOWN. INSTALL 2 X 10 BLOCKING. REFER TO DETAIL 4/A-004.

ELECTRICAL CONDUIT REMOVED BY OTHERS. REFER TO NOTE 3.

INSTALL WOOD LOUVER AND 1 x 4 TRIM, STAIN. INSTALL BIRD SCREEN AT EACH SIDE. REFER TO DETAIL 6/A-004 AND NOTE 7.

REMOVE EXISTING WOOD TRIM. INSTALL SYNTHETIC LUMBER (TYP.) MATCH EXISTING PROFILE.

METAL EDGE. COLOR SHALL MATCH PVC ROOF (TYP.) REFER TO DETAIL 9/A-004.

WATER SHIELD. REFER TO DETAIL 5/A-004

STAIN TRIM AND UNDERSIDE OF EXISTING SOFFIT. (TYP)

EXISTING CONCRETE CURB AND PILASTERS (TYP.)

REMOVE EXISTING CEDAR SHINGLES ALONG BOTTOM THREE ROWS OF REAR BAYS. INSTALL CEDAR SHINGLES WHERE REMOVED AND AT ALL OTHER LOCATIONS WHERE MISSING/DAMAGED, STAIN. REFER TO NOTE 6.

REAR ELEVATION 3 / A-002

SCALE: 3/32" = 1'-0"

NOTES

1. THE CONTRACTOR SHALL VERIFY IN THE FIELD ALL DIMENSIONS AND CONDITIONS.
2. ALL ITEMS ON PLANS ARE PROPOSED UNLESS LABELED EXISTING.
3. ELECTRICAL APPURTENANCES ARE NOT SHOWN. LIGHT FIXTURES, ELECTRICAL CONDUIT AND BRACKETS SHALL BE REMOVED BY OTHERS FOR CONSTRUCTION. ALL ELECTRICAL FIXTURES AND CONDUIT SHALL BE REINSTALLED BY OTHERS AT THE COMPLETION OF CONSTRUCTION.
4. REMOVE AND DISCARD EXISTING ASPHALT ROOF SHINGLES AND VAPOR BARRIER.
5. INFILL CEDAR SHINGLES, 20 OZ COPPER DRIP EDGE, UNDERLAYMENT SHEATHING AND BLOCKING TO INFILL WHERE CANOPY WAS REMOVED.
6. REPLACE ALL MISSING AND DAMAGED SHINGLES WITH APPROXIMATELY 6 SQUARES OF CEDAR SHINGLES, STAIN.
7. ALL EXISTING AND RETROFIT WOOD LOUVERS AND THEIR TRIM SHALL BE STAINED TO MATCH CEDAR SHINGLES.
8. SECURE EXISTING PLYWOOD SUBSTRATE WHERE APPLICABLE TO ACCEPT PROPOSED PVC ROOFING SYSTEM.
9. THE CONTRACTOR SHALL INSTALL FULL LENGTH PVC EXTRUSIONS. IF REQUIRED, INSTALL SHORTER SECTIONS ONLY AT ROOF TRANSITION.
10. FUEL ISLAND FENCING ADJACENT TO SHED WALL SHALL BE REMOVED BY THE CONTRACTOR FOR CONSTRUCTION. THE CONTRACTOR SHALL SECURE FUEL ISLAND EACH DAY UNTIL THE CONCLUSION OF CONSTRUCTION.

MODIFICATION OF FENCING TO FIT WATERSHIELD: THE CONTRACTOR SHALL REMOVE AND REINSTALL FENCE POST ADJACENT ROOF EDGE TO CIRCUMVENT THE WATER SHIELD. MATCH EXISTING PROFILE. SECURE CHAIN LINK MESH, CUTTING AWAY ANY EXCESS. WHERE DISTURBED BY DEMOLITION, REPAIR BITUMINOUS CONCRETE PER DETAIL 2/A-005.

11. THE CONTRACTOR SHALL VERIFY THE CONDITION OF THE TRUSS PLATES AND REPLACE IF REQUIRED. PAINT ALL PLATES AND TRUSS CONNECTIONS. REFER TO SHEET A-006 FOR DETAILS.
12. ALL SALT SHED DEMOLITION WORK SHALL BE PAID FOR UNDER THE MLSI. REFER TO SPECIFICATION SECTION 300000.
13. DESIGN LIVE LOADS ARE 53 PSF OVER HALF OF THE ROOF AND 43 PSF OVER THE ENTIRE ROOF.

REMOVAL OF DIVIDER WALL NOTES:

1. REMOVE TIMBER WALL BY UNBOLTING INDIVIDUAL PLANKS FROM ATTACHMENT.
2. SAW-CUT AND REMOVE BITUMINOUS CONCRETE AROUND DIVIDER WALL. LIMITS OF SAW-CUT SHALL EXTEND 24" AROUND DIVIDER WALL. AT POSTS P1 AND P2 EXCAVATE TO BOTTOM OF PAVEMENT STRUCTURE, TYPICALLY 16" BELOW EXISTING BITUMINOUS CONCRETE.
3. CUT AND REMOVE EXISTING CONCRETE POSTS MARKED P1 AND P2 TO THE BOTTOM OF PAVEMENT STRUCTURE, TYPICALLY 16" BELOW THE EXISTING BITUMINOUS CONCRETE.
4. THE EXISTING CONCRETE POST P3 TO REMAIN, CUT ALL ATTACHMENT BOLTS AS CLOSE TO THE CONCRETE FACE AS POSSIBLE AFTER REMOVING TIMBER PLANKS.
5. REPAIR BITUMINOUS CONCRETE PER DETAIL "BITUMINOUS CONCRETE PATCHING - FULL DEPTH" IN SHEET A-005.

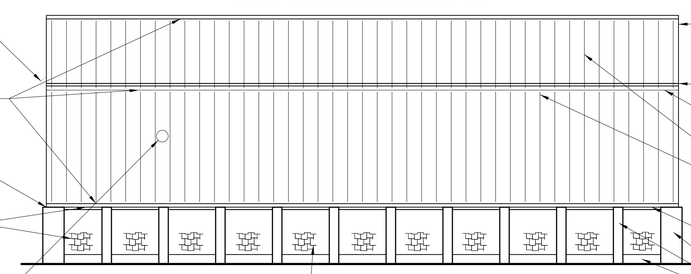

REMOVE EXISTING WOOD CANOPY. REFER TO NOTE 5.

HOT-AIR WELD PVC FLASHING STRIP LAP SECTIONS TO ALIGN HORIZONTALLY.

WATER SHIELD. REFER TO DETAIL 5/A-004

STAIN ALL CEDAR SHINGLES, TRIM AND UNDERSIDE OF SOFFITS. (TYP.) REFER TO NOTE 6.

EXISTING LIGHT FIXTURE REMOVED BY OTHERS. REFER TO NOTE 3.

REMOVE DAMAGED CEDAR SHINGLES ALONG BAYS ON ALL SIDES. (TYP) INSTALL CEDAR SHINGLES WHERE REMOVED AND AT ALL OTHER LOCATIONS WHERE MISSING/DAMAGED, STAIN. REFER TO NOTE 6.

SIDE ELEVATION 2 / A-002 — 4 / A-002 OPP. SIM.

SCALE: 3/32" = 1'-0"

EXISTING ELECTRICAL CONDUIT ALONG TRIM EDGE. REFER TO NOTE 3.

SNOW RETENTION SYSTEM. INSTALL 2 X 10 BLOCKING. REFER TO DETAIL 4/A-004

ROOF TRANSITION. REFER TO DETAIL 2/A-004.

PVC 'STANDING SEAM' PROFILE (EXTRUSION) MEMBRANE ROOF SYSTEM. REFER TO DETAIL 3/A-004.

STAIN TRIM AND UNDERSIDE OF EXISTING SOFFIT. (TYP.)

EXISITING CONCRETE CURB AND PILASTERS (TYP.)

REV.	DATE	REVISION DESCRIPTION	SHEET NO.

THE INFORMATION, INCLUDING ESTIMATED QUANTITIES OF WORK, SHOWN ON THESE SHEETS IS BASED ON LIMITED INVESTIGATIONS BY THE STATE AND IS IN NO WAY WARRANTED TO INDICATE THE CONDITIONS OF ACTUAL QUANTITIES OF WORK WHICH WILL BE REQUIRED.

Plotted Date: 10/1/2019

DESIGNER/DRAFTER: MLM

CHECKED BY: SMM

SCALE AS NOTED

STATE OF CONNECTICUT
DEPARTMENT OF TRANSPORTATION

Filename: ...\FD_MSH_ARC_171_429_A002_Union.dgn

SIGNATURE/BLOCK: OFFICE OF ENGINEERING

APPROVED BY:

PROJECT TITLE: THE REHABILITATION OF THE SALT SHEDS

TOWN: STAFFORD, UNION, VERNON

DRAWING TITLE: UNION PLAN AND ELEVATIONS

PROJECT NO. 0171-0429

DRAWING NO. A-002

SHEET NO. 03.02

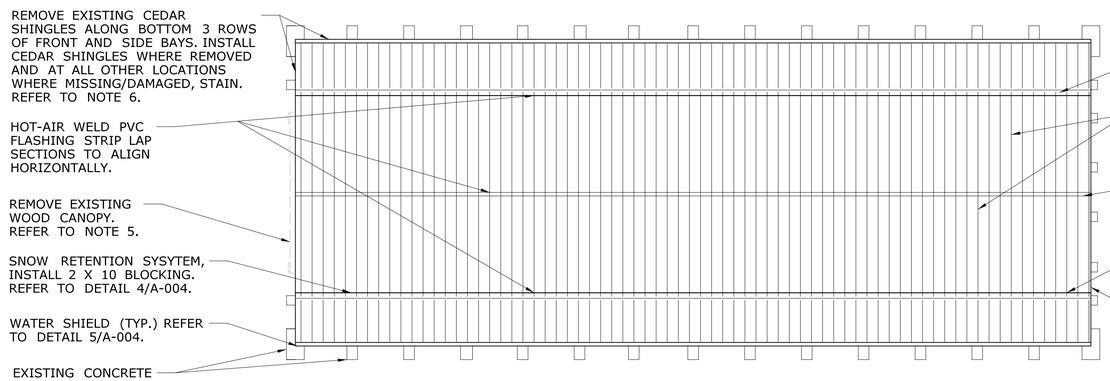

ROOF PLAN
SCALE 3/32" = 1'-0"

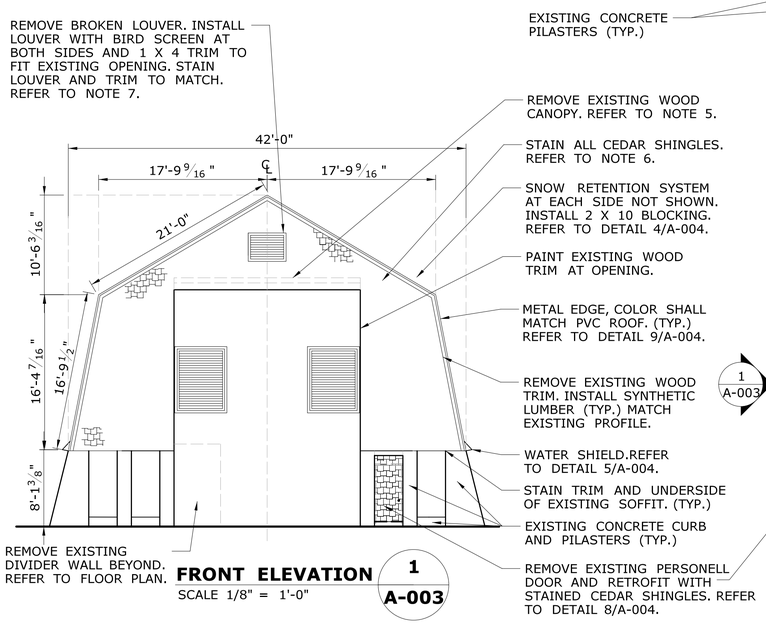

FRONT ELEVATION 1 A-003
SCALE 1/8" = 1'-0"

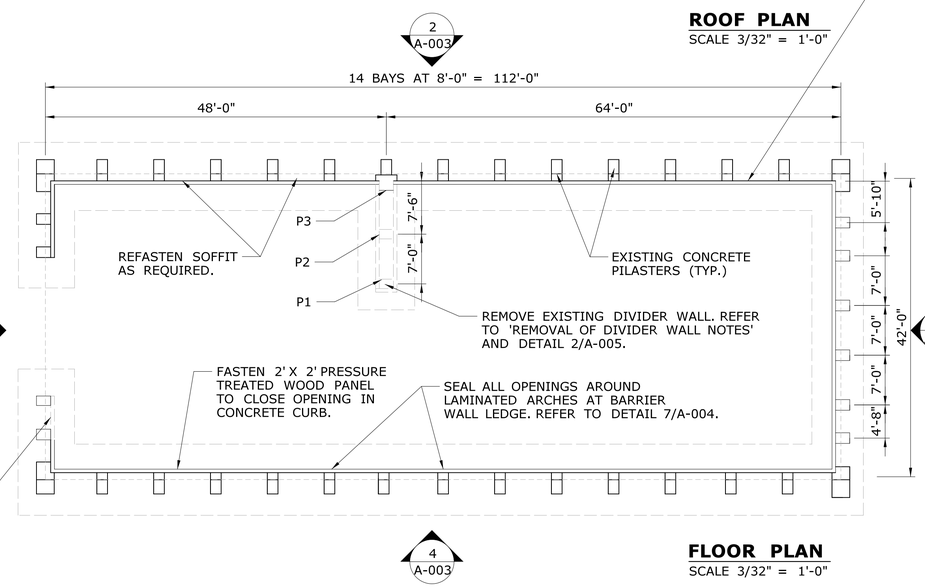

FLOOR PLAN
SCALE 3/32" = 1'-0"

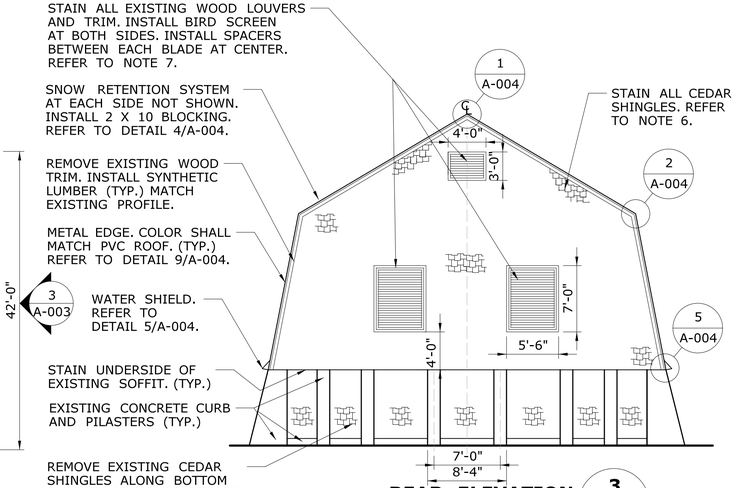

REAR ELEVATION 3 A-003
SCALE 1/8" = 1'-0"

NOTES

1. CONTRACTOR SHALL VERIFY IN THE FIELD ALL DIMENSIONS AND CONDITIONS.

2. ALL ITEMS ON PLANS ARE PROPOSED UNLESS LABELED EXISTING.

3. ELECTRICAL APPURTENANCES ARE NOT SHOWN. FIXTURES, ELECTRICAL CONDUIT AND BRACKETS SHALL BE REMOVED BY OTHERS FOR CONSTRUCTION. ALL FIXTURES SHALL BE REINSTALLED BY OTHERS AT THE COMPLETION OF CONSTRUCTION.

4. REMOVE AND DISCARD EXISTING ASPHALT ROOF SHINGLES AND VAPOR BARRIER.

5. INSTALL CEDAR SHINGLES, 20 OZ COPPER DRIP EDGE, UNDERLAYMENT, SHEATHING AND BLOCKING TO IN-FILL WHERE CANOPY WAS REMOVED.

6. REPLACE ALL MISSING AND DAMAGED SHINGLES WITH APPROXIMATELY 7 SQUARES OF CEDAR SHINGLES, STAIN.

7. ALL EXISTING AND RETROFIT WOOD LOUVERS AND TRIM SHALL BE STAINED TO MATCH EXISTING CEDAR SHINGLES.

8. SECURE EXISTING PLYWOOD SUBSTRATE WHERE APPLICABLE TO ACCEPT PROPOSED PVC ROOFING SYSTEM.

9. CONTRACTOR SHALL INSTALL FULL LENGTH PVC EXTRUSIONS. IF REQUIRED, INSTALL SHORTER SECTIONS ONLY AT ROOF TRANSITION.

11. ALL SALT SHED DEMOLITION WORK SHALL BE PAID FOR UNDER THE MLSI. REFER TO SPECIFICATION SECTION 300000.

10. DESIGN LIVE LOADS ARE 53 PSF OVER HALF OF THE ROOF AND 43 PSF OVER THE ENTIRE ROOF.

REMOVAL OF DIVIDER WALL NOTES:

1. REMOVE TIMBER WALL BY UNBOLTING INDIVIDUAL PLANKS FROM ATTACHMENT.
2. SAW-CUT AND REMOVE BITUMINOUS CONCRETE AROUND DIVIDER WALL. LIMITS OF SAW-CUT SHALL EXTEND 24" AROUND DIVIDER WALL. AT POSTS P1 AND P2 EXCAVATE TO BOTTOM OF PAVEMENT STRUCTURE, TYPICALLY 16" BELOW EXISTING BITUMINOUS CONCRETE.
3. CUT AND REMOVE EXISTING CONCRETE POSTS MARKED P1 AND P2 TO THE BOTTOM OF PAVEMENT STRUCTURE, TYPICALLY 16" BELOW THE EXISTING BITUMINOUS CONCRETE.
4. THE EXISTING CONCRETE POST P3 TO REMAIN, CUT ALL ATTACHMENT BOLTS AS CLOSE TO THE CONCRETE FACE AS POSSIBLE AFTER REMOVING TIMBER PLANKS.
5. REPAIR BITUMINOUS CONCRETE PER DETAIL "BITUMINOUS CONCRETE PATCHING - FULL DEPTH" IN SHEET A-005.

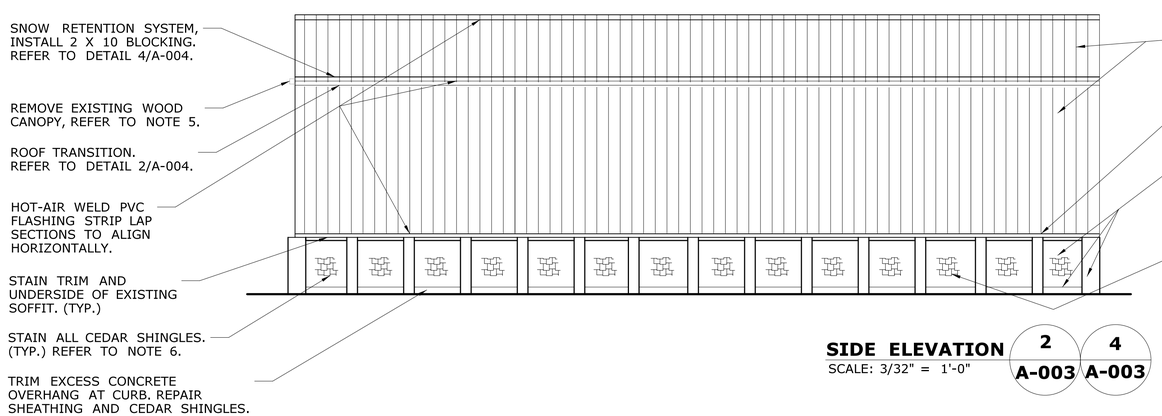

SIDE ELEVATION 2 A-003 4 A-003
SCALE: 3/32" = 1'-0"

REV.	DATE	REVISION DESCRIPTION	SHEET NO.

THE INFORMATION, INCLUDING ESTIMATED QUANTITIES OF WORK, SHOWN ON THESE SHEETS IS BASED ON LIMITED INVESTIGATIONS BY THE STATE AND IS IN NO WAY WARRANTED TO INDICATE THE CONDITIONS OF ACTUAL QUANTITIES OF WORK WHICH WILL BE REQUIRED.

Plotted Date: 10/1/2019

DESIGNER/DRAFTER: MLM
CHECKED BY: SMM
SCALE AS NOTED

STATE OF CONNECTICUT
DEPARTMENT OF TRANSPORTATION

Filename: ...\FD_MSH_ARC_171_429_A003_Vernon.dgn

SIGNATURE/BLOCK:
OFFICE OF ENGINEERING
APPROVED BY:

PROJECT TITLE:
THE REHABILITATION OF THE SALT SHEDS

TOWN: STAFFORD, UNION, VERNON

DRAWING TITLE: VERNON PLANS AND ELEVATIONS

PROJECT NO. 0171-0429
DRAWING NO. A-003
SHEET NO. 03.03

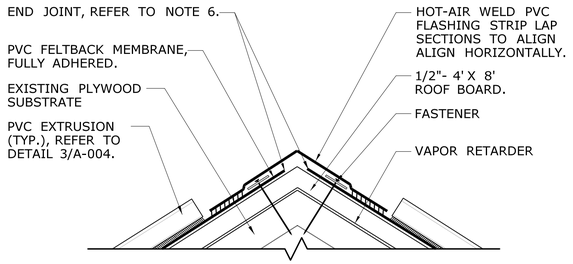

RIDGE 1 / A-004
NOT TO SCALE

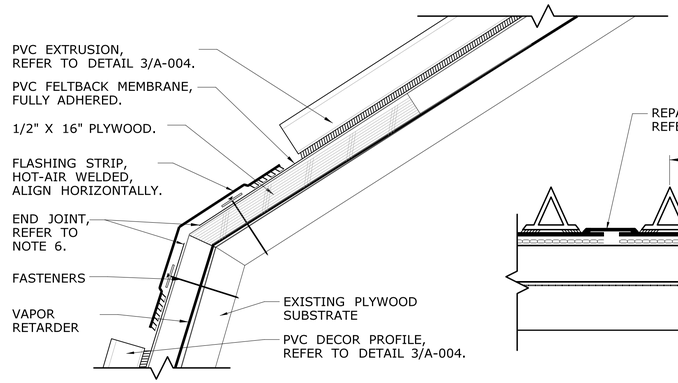

ROOF TRANSITION 2 / A-004
NOT TO SCALE

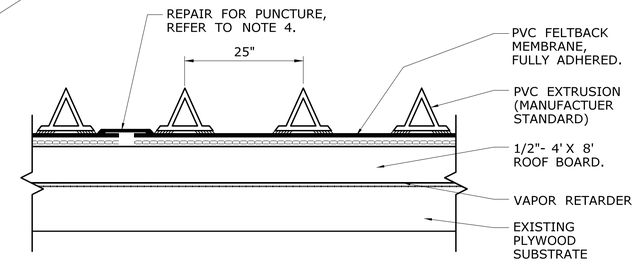

PVC EXTRUSION PROFILE/REPAIR 3 / A-004
NOT TO SCALE

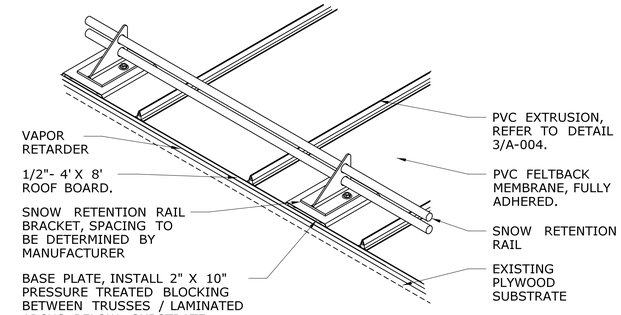

SNOW RETENTION SYSTEM 4 / A-004
NOT TO SCALE

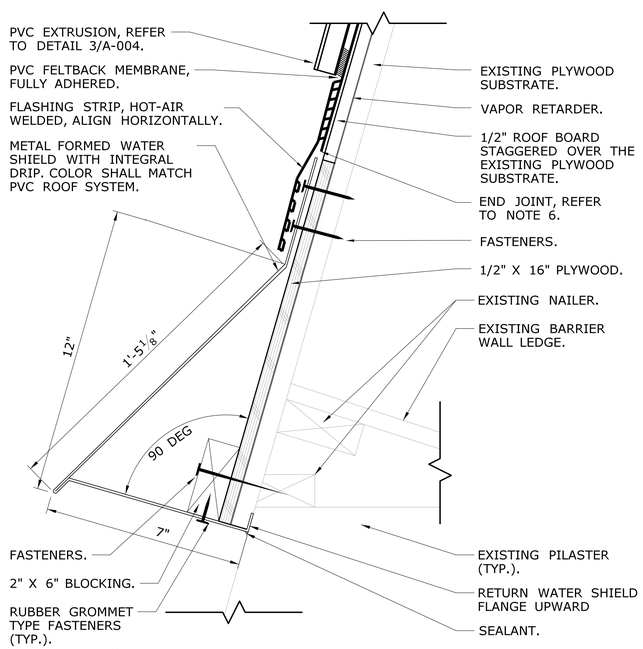

NOTE:
THE INTENT OF THE WATER SHIELD IS TO DIVERT CONSISTENT WATER FLOW AWAY FROM PILASTERS.

CONTRACTOR SHALL INSTALL METAL FORMED END CAPS TO EACH END, HOT-AIR WELD PVC TO OVERLAP AND BRIDGE METAL SEAMS, APPLY APPROVED SEALANT AS REQUIRED.

WATER SHIELD 5 / A-004
NOT TO SCALE

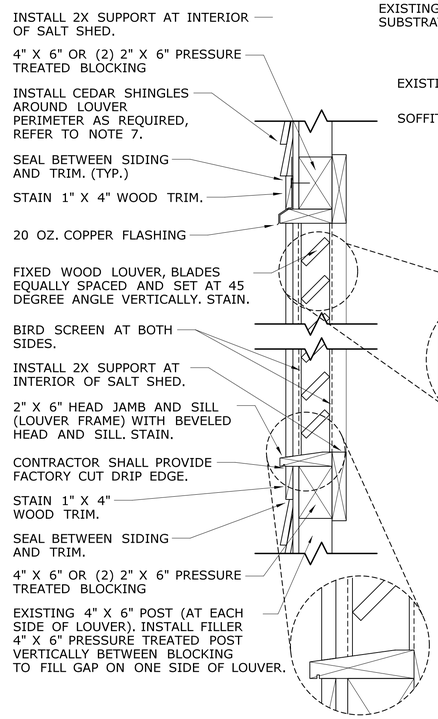

LOUVER RETROFIT 6 / A-004
NOT TO SCALE

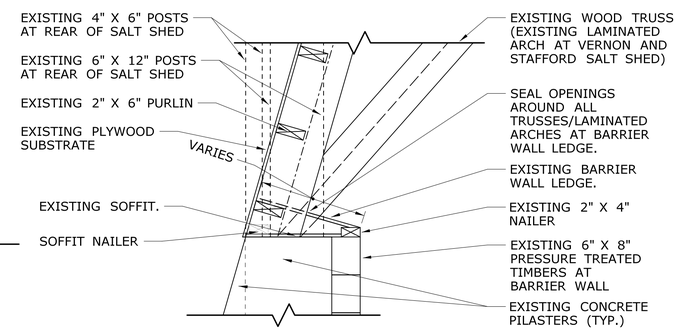

NOTE: PVC DECOR SYSTEM NOT SHOWN.

TRUSS AT TIMBER BARRIER WALL 7 / A-004
NOT TO SCALE

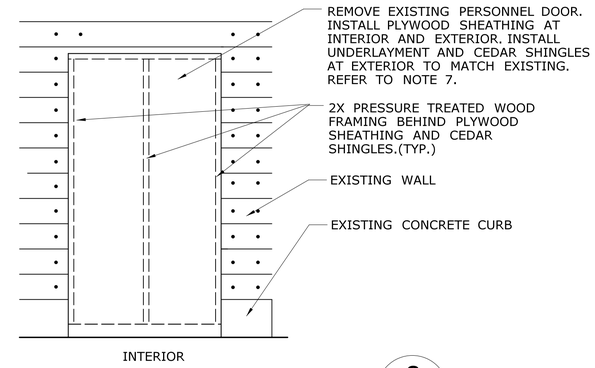

PERSONNEL DOOR RETROFIT 8 / A-004
NOT TO SCALE

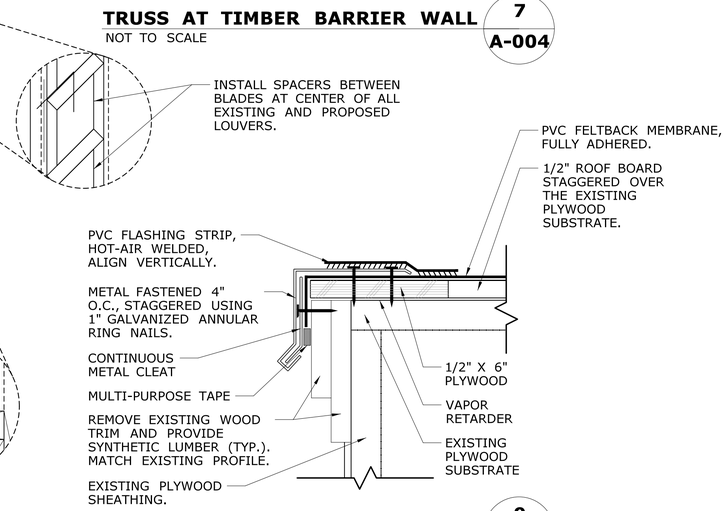

SECTION DETAIL AT FASCIA METAL EDGE 9 / A-004
NOT TO SCALE

NOTES

1. CONTRACTOR SHALL VERIFY IN THE FIELD ALL DIMENSIONS AND CONDITIONS.
2. ALL ITEMS ON PLANS ARE PROPOSED UNLESS LABELED EXISTING.
3. CONTRACTOR SHALL ADD ADDITIONAL FASTENERS AT ROOF BOARD JOINTS OVER THE EXISTING PLYWOOD SUBSTRATE.
4. IN THE EVENT OF A PUNCTURE TO THE PVC MEMBRANE, THE CONTRACTOR SHALL INSTALL A FULL-WIDTH PVC SHEET BETWEEN THE PVC EXTRUSIONS FOR THE FULL LENGTH OF THE ROOF FIELD.
5. CONTRACTOR SHALL STAGGER THE ROOF BOARD OVER THE EXISTING PLYWOOD SUBSTRATE.
6. PVC SHEET SHALL BE INSTALLED CONTINUOUS WITH NO END JOINTS AS SHOWN ON PLAN AT THE RIDGE, ROOF TRANSITION AND WATER SHIELD.
7. ANY CEDAR SHINGLES THAT REMAIN SHALL BE TURNED OVER TO THE STATE AS SPARE PARTS.

REV.	DATE	REVISION DESCRIPTION	SHEET NO.

THE INFORMATION, INCLUDING ESTIMATED QUANTITIES OF WORK, SHOWN ON THESE SHEETS IS BASED ON LIMITED INVESTIGATIONS BY THE STATE AND IS IN NO WAY WARRANTED TO INDICATE THE CONDITIONS OF ACTUAL QUANTITIES OF WORK WHICH WILL BE REQUIRED.

Plotted Date: 10/1/2019

DESIGNER/DRAFTER: MLM
CHECKED BY: SMM
SCALE AS NOTED

STATE OF CONNECTICUT
DEPARTMENT OF TRANSPORTATION

Filename: ...\FD_MSH_ARC_171_429_A004.dgn

SIGNATURE/BLOCK:
OFFICE OF ENGINEERING
APPROVED BY:

PROJECT TITLE:
THE REHABILITATION OF THE SALT SHEDS

TOWN: STAFFORD, UNION VERNON

DRAWING TITLE: ENLARGED DETAILS

PROJECT NO. 0171-0429
DRAWING NO. A-004
SHEET NO. 03.04

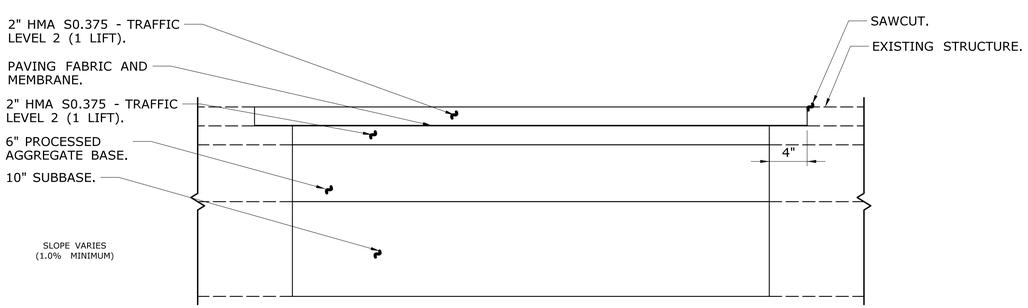

NOTES:
1. ALL ITEMS ASSOCIATED WITH BITUMINOUS CONCRETE PAVEMENT STRUCTURE WILL BE PAID FOR UNDER THE MLSI AS 'BITUMINOUS CONCRETE PATCHING - FULL DEPTH'
2. PAVEMENT STRUCTURE SHOWN IS TYPICAL. CONTRACTOR SHALL MATCH EXISTING BITUMINOUS DEPTH.

BITUMINOUS CONCRETE PATCHING 2 / A-005

SCALE: 1 1/2" = 1'-0"

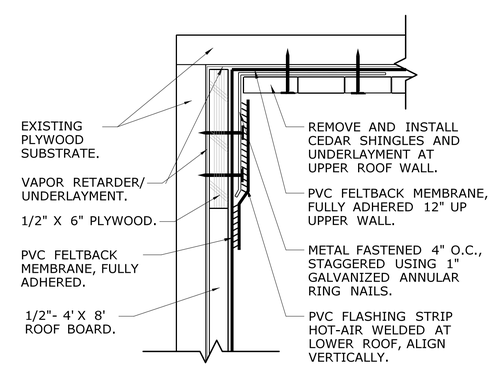

ROOF TO WALL FLASHING 1 / A-005

NOT TO SCALE

NOTES

1. CONTRACTOR SHALL VERIFY IN THE FIELD ALL DIMENSIONS AND CONDITIONS.
2. ALL ITEMS ON PLANS ARE PROPOSED UNLESS LABELED EXISTING.
3. CONTRACTOR SHALL ADD ADDITIONAL FASTENERS AT ROOF BOARD JOINTS OVER THE EXISTING PLYWOOD SUBSTRATE.
4. IN THE EVENT OF A PUNCTURE TO THE PVC MEMBRANE, THE CONTRACTOR SHALL INSTALL A FULL-WIDTH PVC SHEET BETWEEN THE PVC EXTRUSIONS FOR THE FULL LENGTH OF THE ROOF FIELD. REFER TO DETAIL 3/A-004.
5. CONTRACTOR SHALL STAGGER THE ROOF BOARD OVER THE EXISTING PLYWOOD SUBSTRATE.
6. PVC SHEET SHALL BE INSTALLED CONTINUOUS WITH NO END JOINTS AS SHOWN ON PLAN AT THE RIDGE, ROOF TRANSITION AND WATER SHIELD.
7. ANY CEDAR SHINGLES THAT REMAIN SHALL BE TURNED OVER TO THE STATE AS SPARE PARTS.

REV.	DATE	REVISION DESCRIPTION	SHEET NO.

THE INFORMATION, INCLUDING ESTIMATED QUANTITIES OF WORK, SHOWN ON THESE SHEETS IS BASED ON LIMITED INVESTIGATIONS BY THE STATE AND IS IN NO WAY WARRANTED TO INDICATE THE CONDITIONS OF ACTUAL QUANTITIES OF WORK WHICH WILL BE REQUIRED.

Plotted Date: 10/1/2019

DESIGNER/DRAFTER: MLM
CHECKED BY: SMM
SCALE AS NOTED

STATE OF CONNECTICUT
DEPARTMENT OF TRANSPORTATION

Filename: ...\FD_MSH_ARC_171_429_A005.dgn

SIGNATURE/ BLOCK:
OFFICE OF ENGINEERING
APPROVED BY:

PROJECT TITLE:
THE REHABILITATION OF THE SALT SHEDS

TOWN: STAFFORD, UNION, VERNON

DRAWING TITLE: ENLARGED DETAILS

PROJECT NO. 0171-0429
DRAWING NO. A-005
SHEET NO. 03.05

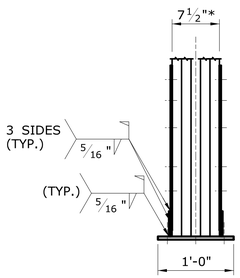

*NOTE:
THIS DIMENSION SHALL BE DETERMINED AT SITE.

PLATE SECTION — 4 / A-006
SCALE: 1" = 1'-0"

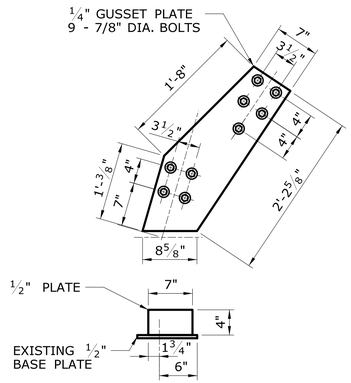

NOTE:
EXISTING PLATE DIMENSIONS NOT SHOWN. DIMENSIONS ARE APPROXIMATE TO BE VERIFIED FROM ACTUAL CONDITION AT SITE.

PLATE DETAIL — 3 / A-006
SCALE: 1" = 1'-0"

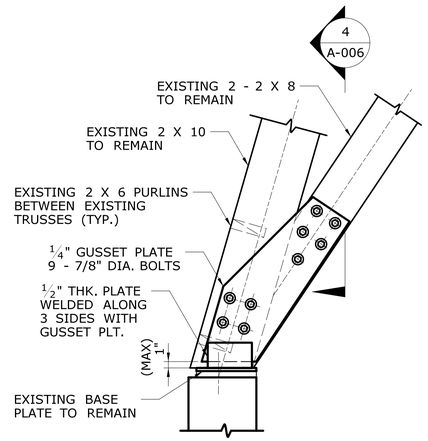

PLATE AT EXISTING TRUSS DETAIL — 2 / A-006
SCALE: 1" = 1'-0"

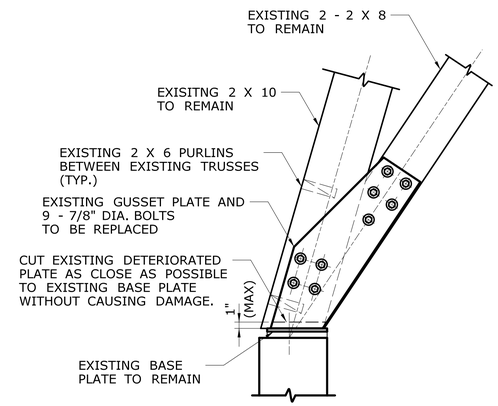

EXISTING PLATE AND TRUSS DETAIL — 1 / A-006
SCALE: 1" = 1'-0"

NOTES:

1. MATERIALS SHALL COMPLY WTIH THE FOLLOWING STANDARD: STEEL PLATES, SHAPES AND BARS ASTM A36. BOLTS ARE 7/8" DIAMETER, HEX-HEAD STAINLESS STEEL (ASTM A307, FY=36 KSI OR BETTER); THE NUTS ARE ASTM A563; THE WASHERS ASME B18.22.1 (PLAIN) AND ASME B18.21.1 (LOCK WASHERS) ARE STAINLESS STEEL.
2. FOR EACH TRUSS ADEQUATE SHORING MUST BE DESIGNED AND INSTALLED BY THE CONTRACTOR BEFORE THE START OF EVERY REPAIR. THE MINIMUM LOAD FOR EACH TRUSS SHORING SYSTEM SHALL NOT BE LESS THANK 20 KIPS PER TRUSS.
3. ALL PLATES AND BOLTS SHALL BE HOT-DIP GALVANIZED, AND PAINTED USING HIGH ZINC DUST CONTENT PAINT WHICH COMPLIES WITH SSPC-PAINT 20.
4. ALL DIMENSIONS MUST BE VERIFIED AT THE SITE BY THE CONTRACTOR.
5. THE CONTRACTOR MUST NOTIFY THE ENGINEER AND DESIGNER FOR LOCATIONS OF SECTION LOSS IN TRUSS PLATES THAT ARE DISCOVERED DURING CONSTRUCTION. EXACT NUMBER OF TRUSS PLATES THAT NEED REPAIR SHALL BE DETERMINED BY THE DESIGNER DURING CONSTRUCTION.

REV.	DATE	REVISION DESCRIPTION	SHEET NO.

THE INFORMATION, INCLUDING ESTIMATED QUANTITIES OF WORK, SHOWN ON THESE SHEETS IS BASED ON LIMITED INVESTIGATIONS BY THE STATE AND IS IN NO WAY WARRANTED TO INDICATE THE CONDITIONS OF ACTUAL QUANTITIES OF WORK WHICH WILL BE REQUIRED.

Plotted Date: 10/1/2019

DESIGNER/DRAFTER: RPL
CHECKED BY: SMM
SCALE AS NOTED

STATE OF CONNECTICUT
DEPARTMENT OF TRANSPORTATION

Filename: ...\FD_MSH_ARC_171_429_A006.dgn

SIGNATURE/BLOCK:
OFFICE OF ENGINEERING
APPROVED BY:

PROJECT TITLE:
THE REHABILITATION OF THE SALT SHEDS

TOWN: STAFFORD, UNION, VERNON

DRAWING TITLE:
ENLARGED DETAILS UNION TRUSS PLATES

PROJECT NO. 0171-0429
DRAWING NO. A-006
SHEET NO. 03.06