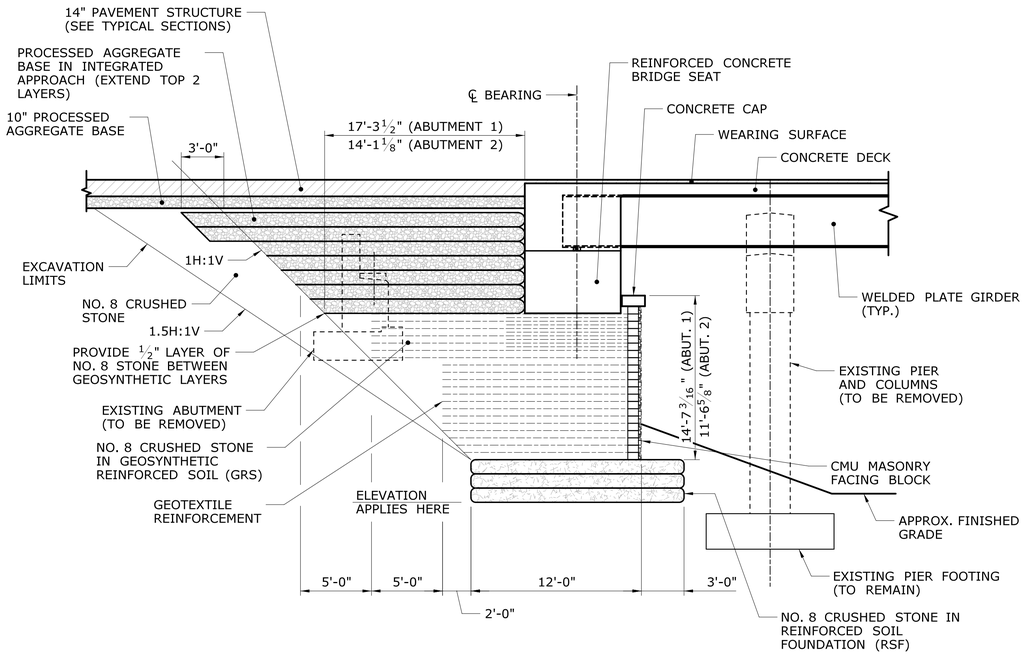

ABUTMENT	NUMBER OF GEOTEXTILE COURSES
1	26
2	20

TYPICAL ABUTMENT SECTION

SCALE: 3/16" = 1'-0"

NOTE:
ABUTMENT 2 SHOWN, ABUTMENT 1 SIMILAR

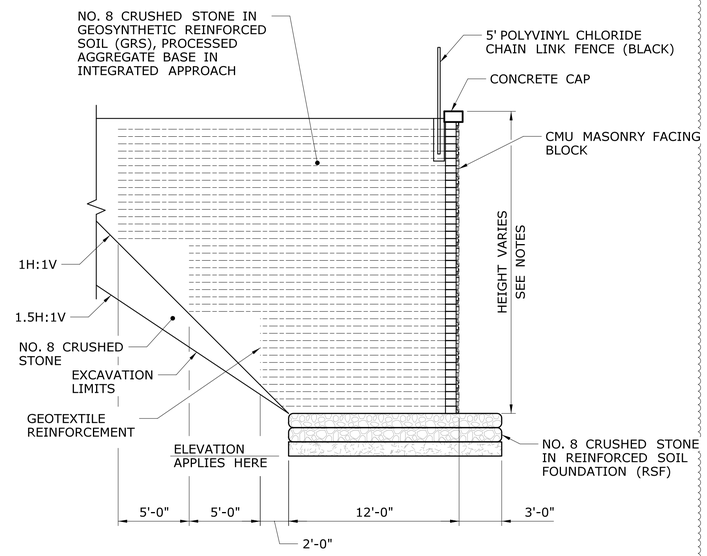

TYPICAL WINGWALL SECTION

SCALE: 3/16" = 1'-0"

NOTES:

1. ABUTMENT SECTION VIEW IS PERPENDICULAR TO THE ABUTMENT AND SKEWED TO THE BRIDGE BEAM.
2. THE MAXIMUM DESIGN FOUNDATION PRESSURES OF THE GRS-IBS ABUTMENTS AND WINGWALLS ARE AS FOLLOWS:

   ABUTMENT 1:

   - STRENGTH LIMIT STATE: 2.98 TSF
   - SERVICE LIMIT: 2.17 TSF

   ABUTMENT 2:

   - STRENGTH LIMIT STATE: 2.70 TSF
   - SERVICE LIMIT: 1.92 TSF
3. THE BEARING BED ZONE SHALL BE 5 BLOCK COURSES IN HEIGHT AND CONSIST OF MAIN GRS REINFORCEMENT ALONG WITH INTERMEDIATE BEARING BED REINFORCEMENT AT THE LENGTHS SHOWN.
4. REINFORCEMENT LENGTHS MAY BE EXTENDED TO ALLOW THE USE OF STANDARD ROLL WIDTHS.
5. A MINIMUM OF 2" SHALL BE MAINTAINED BETWEEN THE CONTINUOUS CIP BEARING SEAT AND BEARING BED REINFORCEMENT.
6. THE CONTRACTOR SHALL SUBMIT BLOCK COLOR AND FACING TEXTURE TO THE ENGINEER FOR APPROVAL.
7. THE CONTRACTOR SHALL SUBMIT CORNER DETAILS. WHERE BLOCK TO NOT INTERLOCK, THE BLOCK SUPPLIER SHALL RECOMMEND DETAILS TO PREVENT BLOCKS FROM SEPARATING ALONG THE TURNING LINE.
8. THE CONTRACTOR SHALL BE RESPONSIBLE FOR THE GLOBAL STABILITY OF THE EXISTING ABUTMENT DURING CONSTRUCTION AND THE INSTALLATION OF THE TEMPORARY EARTH RETAINING SYSTEM. THE TEMPORARY EARTH RETAINING SYSTEM SHALL BE INSTALLED DURING STAGE 1 PRIOR TO CONSTRUCTION OF THE RSF AND GRS ABUTMENT. A PORTION OF THE EXISTING BRIDGE WILL BE OPERATIONAL DURING INSTALLATION OF THE TEMPORARY EARTH RETAINING SYSTEM.
9. THE CIP BRIDGE SEAT AND THE CONCRETE CAP SHALL BE PAID UNDER THE COST OF ITEM "ABUTMENT AND WALL CONCRETE".
10. THE GEOSYNTHETIC FABRIC SHALL BE PLACED TO ACCOMMODATE THE FIRE SUPPRESSION STANDPIPE SYSTEM. THE STANDPIPE SYSTEM WITHIN THE LIMITS OF THE GRS ABUTMENT MAY BE INSTALLED CONCURRENTLY WITH THE ABUTMENT.

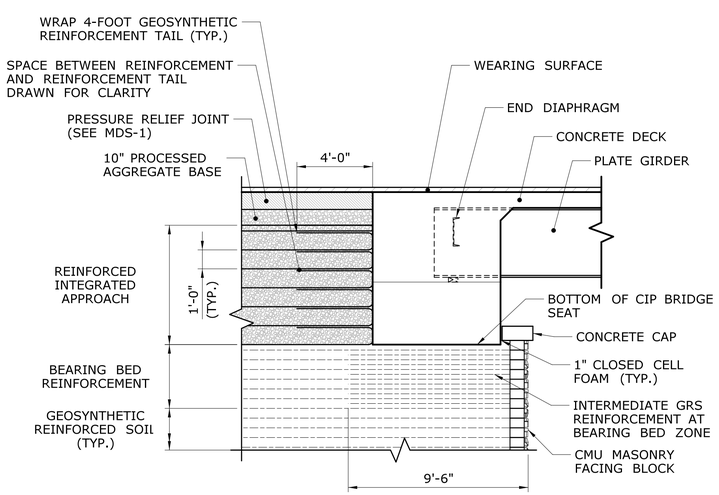

BRIDGE SEAT AND INTEGRATED APPROACH

SCALE: 1/4" = 1'-0"

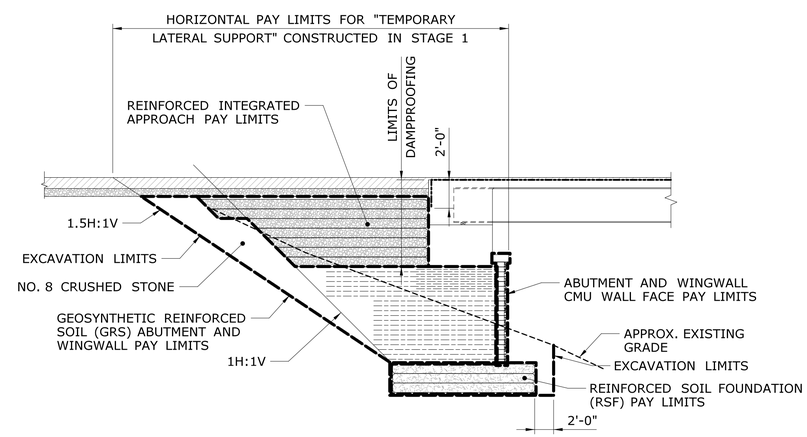

GRS-IBS PAY LIMITS

SCALE: N.T.S.

Digitally signed by Thomas Pechillo
Date: 2019.12.05
09:03:01-05'00'

ADDENDUM NO. 2

REV.	DATE	REVISION DESCRIPTION	SHEET NO.
1	12/03/19	REVISIONS PER ADDENDUM NO. 2	15.13

THE INFORMATION, INCLUDING ESTIMATED QUANTITIES OF WORK, SHOWN ON THESE SHEETS IS BASED ON LIMITED INVESTIGATIONS BY THE STATE AND IS IN NO WAY WARRANTED TO INDICATE THE CONDITIONS OF ACTUAL QUANTITIES OF WORK WHICH WILL BE REQUIRED.

Plotted Date: 12/5/2019

DESIGNER/DRAFTER: MW/TB
CHECKED BY: CP
SCALE AS NOTED

STATE OF CONNECTICUT
DEPARTMENT OF TRANSPORTATION

Filename: ...\SB_MSH_001745_155-171_S-13_Substructure Details 1_A2.dgn

SIGNATURE/BLOCK:
BL Companies
100 Constitution Plaza
10th Floor
Hartford, CT 06103

PROJECT TITLE:
SAFETY AND OPERATIONAL IMPROVEMENTS ON I-84 BRIDGE NO. 01745

TOWN: **WEST HARTFORD**

DRAWING TITLE: **SUBSTRUCTURE DETAILS - 1**

PROJECT NO. **155-171**
DRAWING NO. **S-13**
SHEET NO. **15.13.A2**

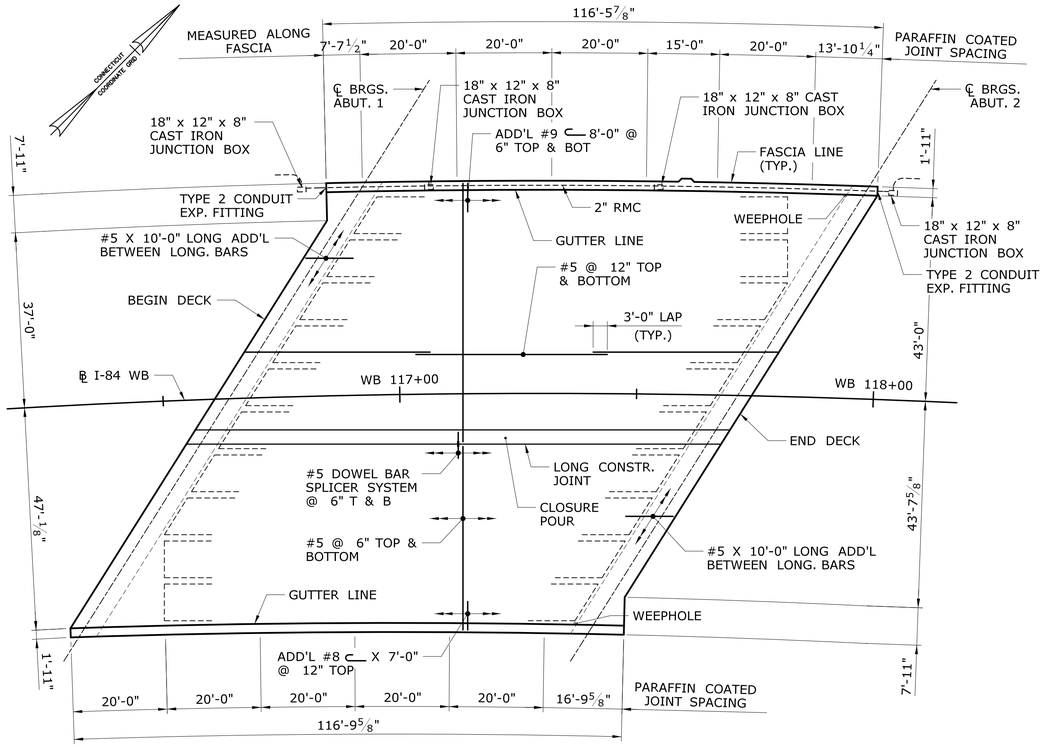

DECK PLAN

SCALE: 1/16" = 1'

TOP OF CONCRETE DECK ELEVATIONS											
GIRDER	℄ BRG. ABUT. 1	0.1L	0.2L	0.3L	0.4L	0.5L	0.6L	0.7L	0.8L	0.9L	℄ BRG. ABUT. 2
G1	165.71	165.60	165.46	165.33	165.19	165.04	164.89	164.73	164.57	164.41	164.22
G2	165.88	165.76	165.63	165.49	165.35	165.21	165.06	164.91	164.75	164.58	164.42
G3	165.62	165.51	165.39	165.28	165.17	165.06	164.94	164.83	164.71	164.60	164.48
G4	165.13	165.02	164.91	164.79	164.68	164.56	164.44	164.33	164.21	164.09	163.97
G5	164.65	164.54	164.43	164.31	164.20	164.08	163.97	163.85	163.73	163.62	163.50
G6	164.17	164.06	163.94	163.83	163.72	163.60	163.49	163.37	163.26	163.14	163.02
G7	163.69	163.57	163.46	163.35	163.24	163.12	163.01	162.89	162.77	162.66	162.54
G8	163.20	163.09	162.98	162.87	162.75	162.64	162.52	162.41	162.29	162.17	162.06
G9	162.72	162.61	162.50	162.38	162.27	162.16	162.04	161.92	161.81	161.69	161.57
G10	162.24	162.13	162.02	161.90	161.79	161.67	161.56	161.44	161.33	161.21	161.09
G11	161.76	161.65	161.53	161.42	161.31	161.19	161.08	160.96	160.84	160.73	160.61

DECK NOTES

1. ELEVATIONS SHOWN ON THE DECK PLAN APPLY AT THE TOP OF THE CONCRETE DECK.
2. BRIDGE DECK CONCRETE (SIP-FORMS) SHALL BE USED THROUGHOUT THE ENTIRE DECK.
3. PARAPET CONCRETE SHALL BE USED FOR THE PARAPETS.
4. ALL REINFORCEMENT IN THE CONCRETE DECK AND PARAPETS GALVANIZED, UNLESS OTHERWISE NOTED, AND SHALL BE PAID FOR IN THE ITEM "DEFORMED STEEL BARS - GALVANIZED".
5. MAIN REINFORCEMENT SHALL BE PERPENDICULAR TO THE GIRDERS.
6. FOR CONSTRUCTION STAGING, SEE DWG. NO. S-09
7. DOWEL BAR SPLICER SHALL BE GALVANIZED AND SHALL BE PAID FOR UNDER THE ITEM "DOWEL BAR SPLICER SYSTEM - GALVANIZED".
8. FOR MEMBRANE WATERPROOFING DETAILS, SEE DWG. NO. S-22.
9. FOR DECK GEOMETRY, SEE LAYOUT PLAN ON DWG. NO. S-04.

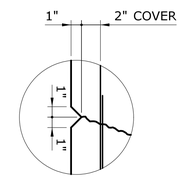

RUSTICATION DETAIL

SCALE: N.T.S.

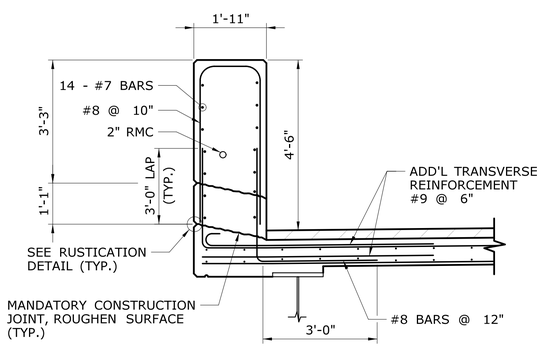

NORTH PARAPET

SCALE: 1/2" = 1'-0"

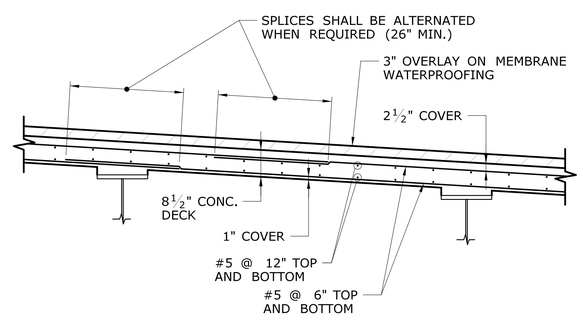

DECK SECTION

SCALE: 1/2" = 1'-0"

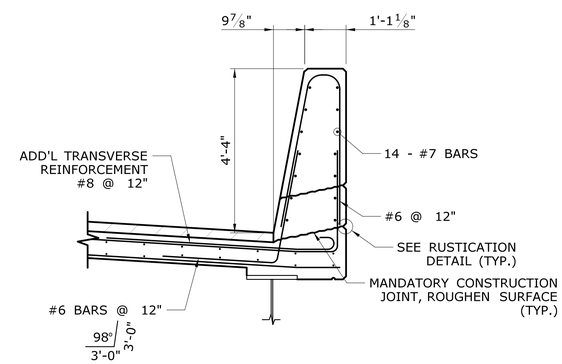

SOUTH PARAPET

SCALE: 1/2" = 1'-0"

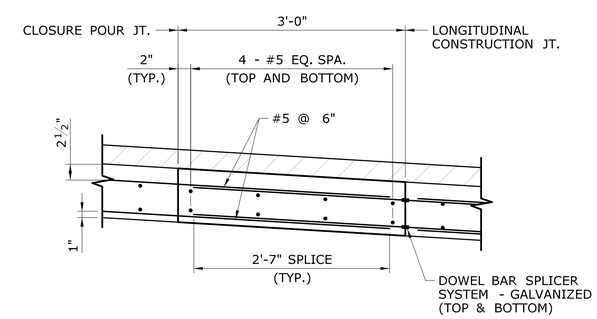

CLOSURE POUR DETAIL

SCALE: 1" = 1'-0

ADDENDUM NO. 2

REV.	DATE	REVISION DESCRIPTION	SHEET NO.
1	12/03/19	REVISIONS PER ADDENDUM NO. 2	15.21

THE INFORMATION, INCLUDING ESTIMATED QUANTITIES OF WORK, SHOWN ON THESE SHEETS IS BASED ON LIMITED INVESTIGATIONS BY THE STATE AND IS IN NO WAY WARRANTED TO INDICATE THE CONDITIONS OF ACTUAL QUANTITIES OF WORK WHICH WILL BE REQUIRED.

Plotted Date: 12/2/2019

DESIGNER/DRAFTER: MW/TB
CHECKED BY: CF
SCALE AS NOTED

STATE OF CONNECTICUT
DEPARTMENT OF TRANSPORTATION

Filename: ...\SB_MSH_001745_155-171_S-21_DPN_A2.dgn

SIGNATURE/BLOCK:
BL Companies
100 Constitution Plaza
10th Floor
Hartford, CT 06103

PROJECT TITLE:
SAFETY AND OPERATIONAL IMPROVEMENTS ON I-84 BRIDGE NO. 01745

TOWN: **WEST HARTFORD**

DRAWING TITLE: **DECK PLAN**

PROJECT NO. **155-171**
DRAWING NO. **S-21**
SHEET NO. **15.21.A2**

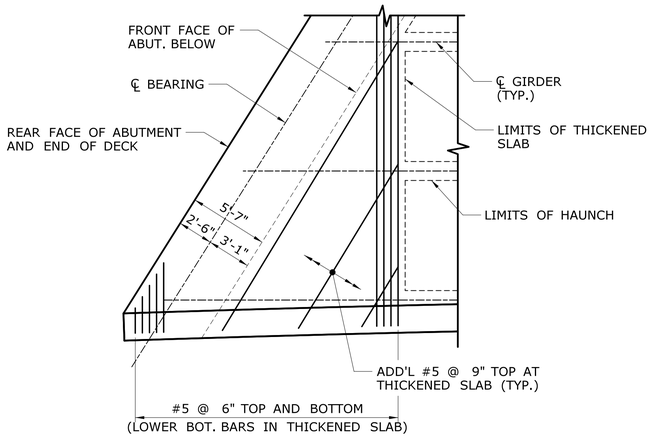

ACUTE CORNER DETAIL

SCALE: $^{3}/_{16}$" = 1'-0"

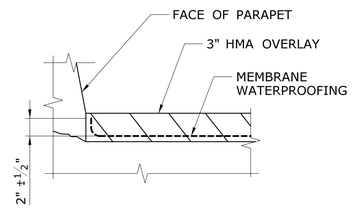

MEMBRANE WATERPROOFING AT GUTTER

SCALE: 1½" = 1'-0"

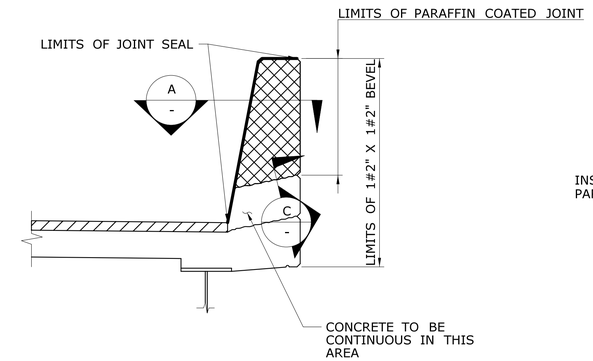

NEGATIVE MOMENT REGIONS

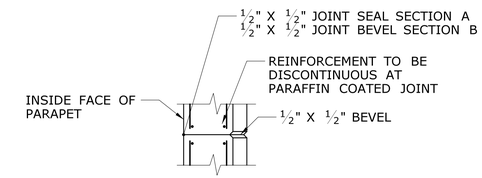

SECTION A, B

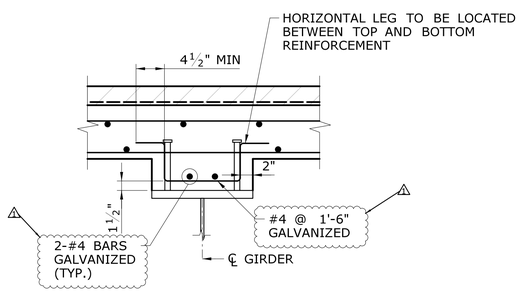

HAUNCH REINFORCEMENT DETAIL

SCALE: 1" = 1'-0"

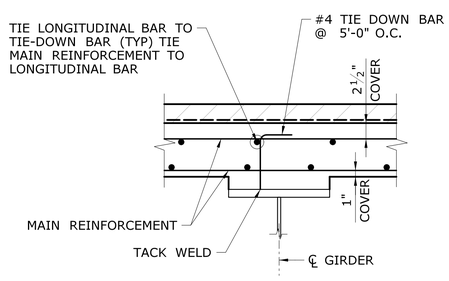

TIE DOWN DETAIL

SCALE: 1" = 1'-0

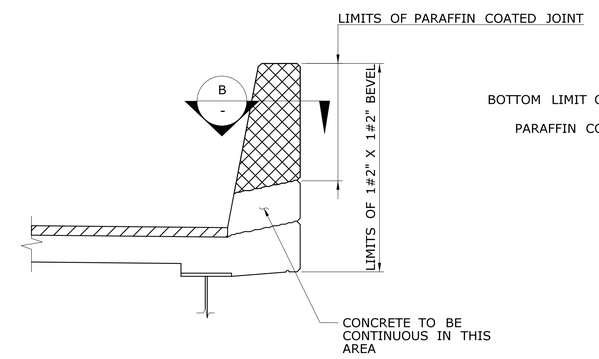

POSITIVE MOMENT REGIONS

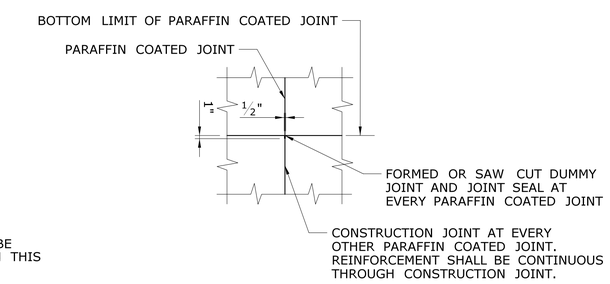

SECTION C

HAUNCH NOTES:

1. THE MINIMUM HAUNCH THICKNESS SHALL BE 1" MEASURED AT THE EDGE OF THE FLANGE. IF IT IS DETERMINED THAT THE HAUNCH CANNOT BE MAINTAINED, THE ENGINEER SHALL BE NOTIFIED IMMEDIATELY.
2. HAUNCH REINFORCEMENT SHOWN IS FOR HAUNCH DEPTH OF 4" TO 6". REINFORCEMENT IS NOT REQUIRED FOR HAUNCH DEPTH LESS THAN 4". IF HAUNCH DEPTH EXCEEDS 6", NOTIFY THE ENGINEER.

TIE DOWN NOTES:

1. TIE DOWN BARS DO NOT EXCLUDE THE USE OF CHAIRS FOR SUPPORTING THE REINFORCING MAT.
2. THE COST OF FURNISHING AND PLACING TIE-DOWN BARS TO BE INCLUDED IN THE CONTRACT ITEM "DEFORMED STEEL BARS - GALVANIZED."
3. TIE-DOWN BAR AND LONGITUDINAL BARS TO CLEAR SHEAR CONNECTORS
4. TIE-DOWN BARS SHALL NOT BE WELDED AT AREAS OF NEGATIVE MOMENT.

STANDARD PARAFFIN COATED JOINT DETAILS

SCALE: ½" = 1'-0"

ADDENDUM NO. 2

REV.	DATE	REVISION DESCRIPTION	SHEET NO.
1	12/03/19	REVISIONS PER ADDENDUM NO. 2	15.22

THE INFORMATION, INCLUDING ESTIMATED QUANTITIES OF WORK, SHOWN ON THESE SHEETS IS BASED ON LIMITED INVESTIGATIONS BY THE STATE AND IS IN NO WAY WARRANTED TO INDICATE THE CONDITIONS OF ACTUAL QUANTITIES OF WORK WHICH WILL BE REQUIRED.

Plotted Date: 12/2/2019

DESIGNER/DRAFTER: MW

CHECKED BY: CP

SCALE AS NOTED

STATE OF CONNECTICUT
DEPARTMENT OF TRANSPORTATION

Filename: ...\SB_MSH_001745_155-171_S-22_DDT1_A2.dgn

SIGNATURE/BLOCK:

BL Companies
100 Constitution Plaza
10th Floor
Hartford, CT 06103

PROJECT TITLE:

SAFETY AND OPERATIONAL IMPROVEMENTS ON I-84 BRIDGE NO. 01745

TOWN: **WEST HARTFORD**

DRAWING TITLE: **DECK DETAILS - 1**

PROJECT NO. **155-171**

DRAWING NO. **S-22**

SHEET NO. **15.22.A2**