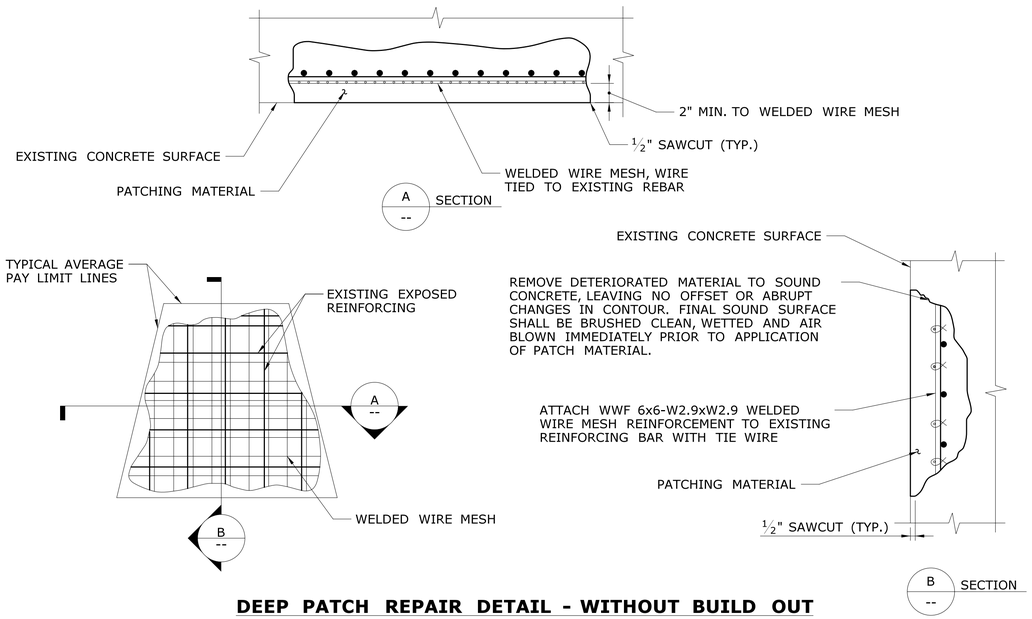

DEEP PATCH REPAIR DETAIL - WITHOUT BUILD OUT

NOT TO SCALE

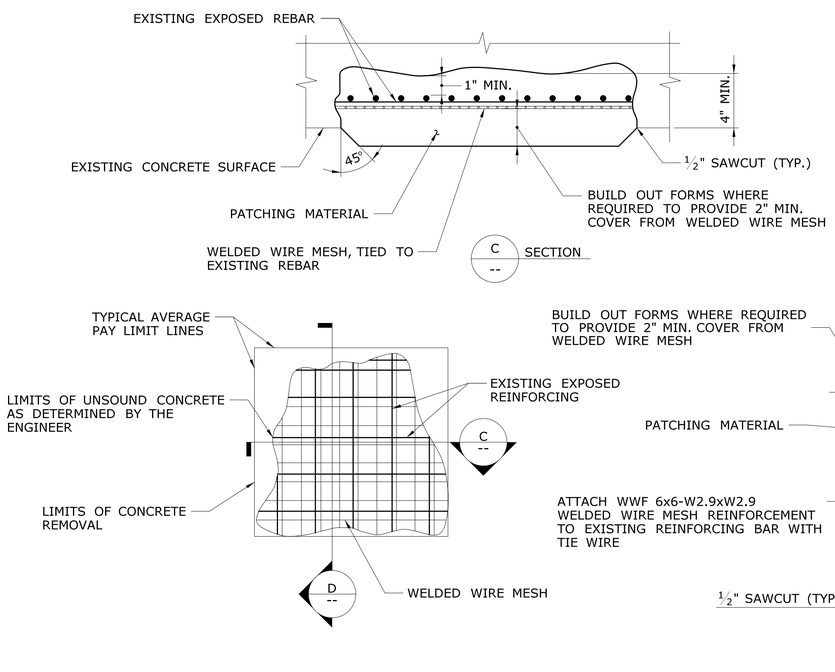

REPAIR DETAIL - WITH BUILD OUT

NOT TO SCALE

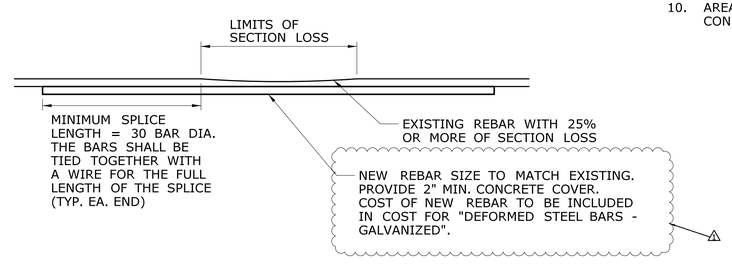

REINFORCEMENT SPLICE DETAIL

NOT TO SCALE

REPAIR PROCEDURE

1. REMOVE DETERIORATED MATERIAL TO SOUND CONCRETE LEAVING NO OFFSET OR ABRUPT CHANGES IN CONTOUR. IF REINFORCING BARS ARE NOT EXPOSED AFTER REMOVAL OF DETERIORATED CONCRETE, MOVE ON TO NEXT REPAIR LOCATION. IF REINFORCING BARS ARE EXPOSED, FOLLOW THE REMAINDER OF THIS PROCEDURE.
2. CLEAN EXISTING REINFORCING STEEL AND CONCRETE (NEWLY EXPOSED), SEE SPECIFICATIONS. MISSING OR DETERIORATED REINFORCING STEEL SHALL BE REPLACED AND SPLICED AS SHOWN IN THE DETAIL OR AS DIRECTED BY THE ENGINEER. COST OF SPLICING TO BE PAID UNDER "CLASS 'S' CONCRETE".
3. INSTALL WELDED WIRE MESH AND APPLY ZINC RICH PRIMER TO EXISTING AND NEW REINFORCING STEEL IMMEDIATELY PRIOR TO PLACING PATCHING MATERIAL. SURFACE OF EXISTING AND NEW STEEL SHALL BE PREPARED IN ACCORDANCE WITH THE PRIMER MANUFACTURER'S INSTRUCTIONS. COST OF WELDED WIRE MESH AND PRIMER TO BE PAID FOR UNDER "CLASS 'S' CONCRETE".
4. FORM AND PATCH SURFACE.
5. ALL NEW EXPOSED CONCRETE SURFACES WITHIN AREA TO BE REPAIRED SHALL BE RUBBED TO PRODUCE A SMOOTH FINISH.

REPAIR NOTES

1. REPAIR DETAILS APPLIY TO DETERIORATED AREAS OF REINFORCED CONCRETE WHERE REINFORCING IS EXPOSED.
2. ALL WORK SHALL BE PERFORMED WHERE DIRECTED BY THE ENGINEER.
3. REPAIRS SHALL BE PAID FOR UNDER THE ITEM "SURFACE REPAIR CONCRETE".
4. SURFACE PREPARATION, PROPORTIONING AND MIXING OF MATERIALS, APPLICATION OF MATERIALS AND REPAIR PROCEDURES SHALL BE IN ACCORDANCE WITH THE MANUFACTURER'S RECOMMENDATIONS.
5. NEW CONCRETE PATCHES SHALL MATCH SHAPE OF EXISTING CONCRETE SURFACE. COLOR OF NEW PATCH CONCRETE SHALL MATCH COLOR OF ADJACENT SURFACES AS CLOSELY AS POSSIBLE.
6. EXPOSED REINFORCING BARS SHALL BE BLAST CLEANED AND COATED WITH A ZINC RICH PRIMER, AS APPROVED BY THE ENGINEER, BEFORE APPLYING THE PATCHING MATERIAL. COST OF PRIMER SHALL BE INCLUDED IN THE COST OF "SURFACE REPAIR CONCRETE".
7. SPLICED REINFORCING BARS SHALL BE COATED WITH A ZINC RICH PRIMER, AS APPROVED BY THE ENGINEER, BEFORE APPLYING THE PATCHING MATERIAL. SURFACE OF EXISTING AND NEW STEEL SHALL BE PREPARED IN ACCORDANCE WITH THE PRIMER MANUFACTURER'S INSTRUCTIONS. COST OF PRIMER SHALL BE INCLUDED IN THE COST OF "SURFACE REPAIR CONCRETE".
8. THE REMOVAL OF DETERIORATED CONCRETE SHALL PROCEED AS DIRECTED BY THE ENGINEER. IF THE REMOVAL OF DETERIORATED CONCRETE BECOMES EXCESSIVE, THE REMOVAL WORK SHALL STOP AND THE ENGINEER NOTIFIED IMMEDIATELY. COST OF REMOVAL OF DETERIORATED CONCRETE AND SURFACE PREPARATION OF THE REPAIR AREA SHALL BE INCLUDED IN THE COST OF "SURFACE REPAIR CONCRETE".
9. THE CONTRACTOR SHALL NOT REMOVE CONCRETE EXCEPT IN THE PRESENCE OF THE ENGINEER OR HIS APPOINTED REPRESENTATIVE. IF THE AREA REMOVED EXCEEDS THE AREAS SHOWN ON THE PLANS BY 25%, OR IF THE REMOVAL DEPTHS EXTEND MORE THAN 1½" BEHIND THE MAIN REINFORCING BARS, THE CONTRACTOR SHALL CEASE REMOVAL OPERATIONS AND NOTIFY THE ENGINEER IMMEDIATELY. THE ENGINEER SHALL DETERMINE IF THE REMOVAL OPERATIONS REDUCE THE STRUCTURAL CAPACITY OF THE ELEMENT.
10. AREAS DISTURBED BY CONSTRUCTION SHALL BE RESTORED TO THEIR ORIGINAL CONDITION UNLESS OTHERWISE NOTED OR AS DIRECTED BY THE ENGINEER.

Digitally signed by Thomas Pechillo
Date: 2019.12.05 09:01:57-05'00'

ADDENDUM NO. 2

REV.	DATE	REVISION DESCRIPTION	SHEET NO.
1	12/03/19	REVISIONS PER ADDENDUM NO. 2	13.20

THE INFORMATION, INCLUDING ESTIMATED QUANTITIES OF WORK, SHOWN ON THESE SHEETS IS BASED ON LIMITED INVESTIGATIONS BY THE STATE AND IS IN NO WAY WARRANTED TO INDICATE THE CONDITIONS OF ACTUAL QUANTITIES OF WORK WHICH WILL BE REQUIRED.

Plotted Date: 12/2/2019

DESIGNER/DRAFTER: MW
CHECKED BY: CP
SCALE AS NOTED

STATE OF CONNECTICUT
DEPARTMENT OF TRANSPORTATION

Filename: ...\SB_MSH_Br01743B_155-171_S-20_CON_REPAIR_A2.dgn

SIGNATURE/BLOCK:
BL Companies
100 Constitution Plaza
10th Floor
Hartford, CT 06103

PROJECT TITLE:
SAFETY AND OPERATIONAL IMPROVEMENTS ON I-84 BRIDGE NO. 01743B

TOWN: **WEST HARTFORD**

DRAWING TITLE: **CONCRETE REPAIR DETAILS**

PROJECT NO. **155-171**
DRAWING NO. **S-20**
SHEET NO. **13.20.A2**

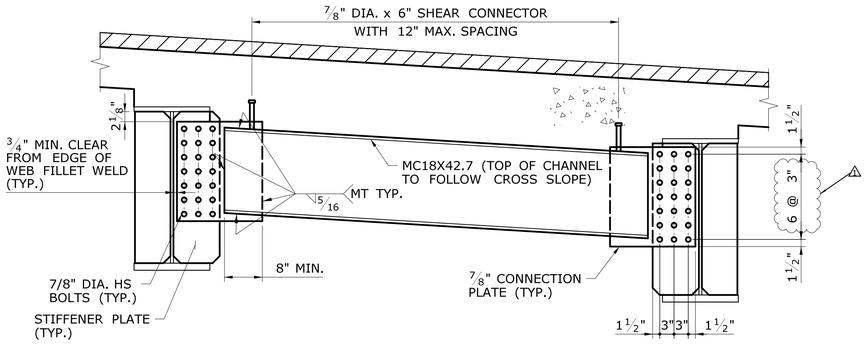

END BEARING DIAPHRAGM (D1)

SCALE: 3/4" = 1'-0"

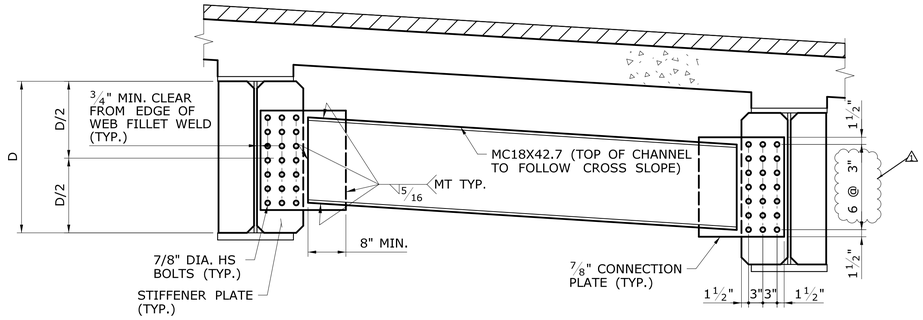

INTERMEDIATE DIAPHRAGM (D2)

SCALE: 3/4" = 1'-0"

NOTES:

1. ALL BOLTS SHALL BE 7/8" ASTM F3125 GRADE A490 TYPE 3 HIGH STRENGTH BOLTS.
2. ALL FASTNERS SHALL HAVE ONE HEAVY HEX NUT AND ONE HARDENED WASHER UNDER THE TURNED ELEMENT.
3. BOLT HOLES IN CHANNELS SHALL BE 15/16" Ø (STANDARD). BOLT HOLES IN CONNECTION OR STIFFENER PLATES SHALL BE 1 1/16" Ø (OVERSIZED).
4. CENTERLINE OF BOLT HOLES SHALL BE VERTICAL.
5. NO ATTACHMENT SHALL BE FILLET WELDED, PLUG WELDED OR TACK WELDED TO THE TENSION ZONE.

FIELD SPLICE NOTES:

1. ALL SPLICE BOLTS SHALL BE ASTM F3125 GRADE A490 TYPE 3, 7/8" Ø.
2. ALL SPLICE HOLES SHALL BE 15/16" Ø.
4. BOLT HEADS SHALL FACE DOWNWARD ON FLANGE SPLICES AND SHALL FACE OUTWARD ON FASCIA GIRDER WEB SPLICES.
5. BOLTED FIELD SPLICES ARE DESIGNED AS SLIP CRITICAL CONNECTIONS WITH CLASS "B" CONTACT FAYING SURFACES.
6. BOLTED FIELD SPLICES SHALL BE PAID FOR UNDER THE ITEM "STRUCTURAL STEEL (SITE NO. 1)".
7. ALL BOLT THREADS TO BE EXCLUDED FROM THE SHEAR PLANE.

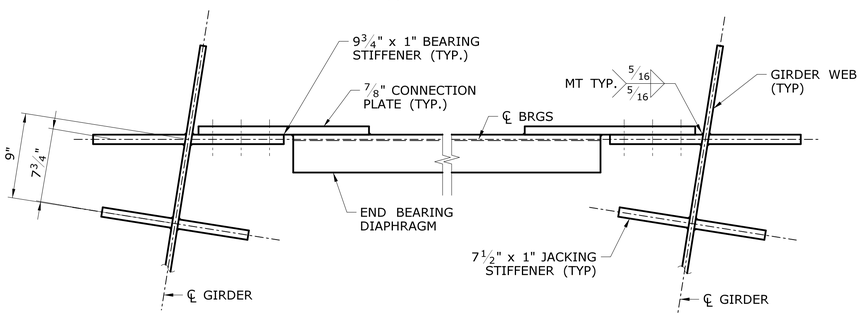

BEARING AND JACKING STIFFENER LAYOUT

SCALE: 1 1/2" = 1'-0"

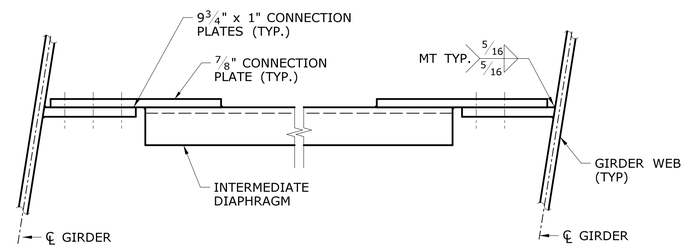

CONNECTION PLATE LAYOUT

SCALE: 1 1/2" = 1'-0"

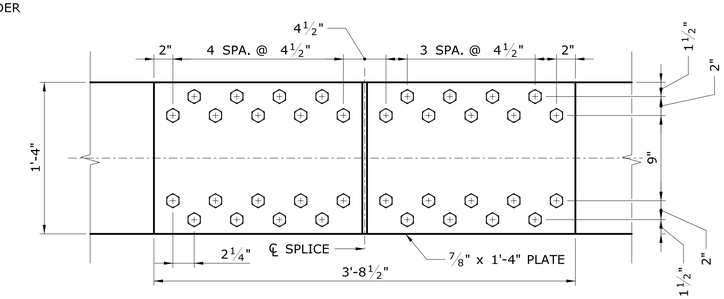

FIELD SPLICE TOP FLANGE PLAN

SCALE: 1 1/2" = 1'-0"

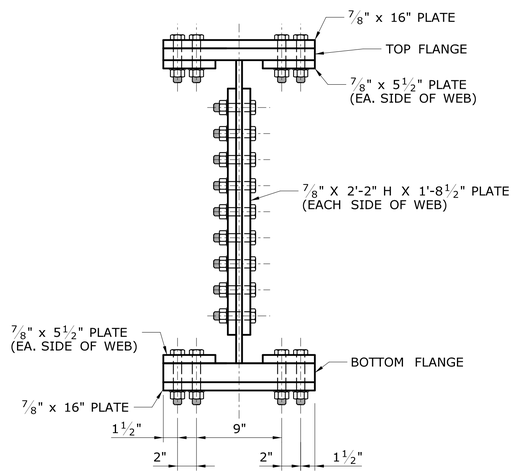

FIELD SPLICE SECTION

SCALE: 1 1/2" = 1'-0"

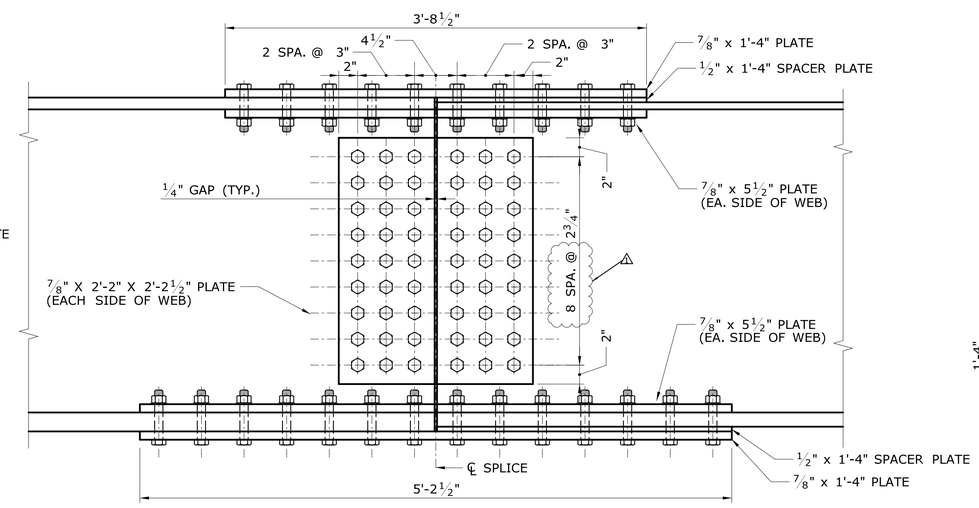

FIELD SPLICE ELEVATION

SCALE: 1 1/2" = 1'-0"

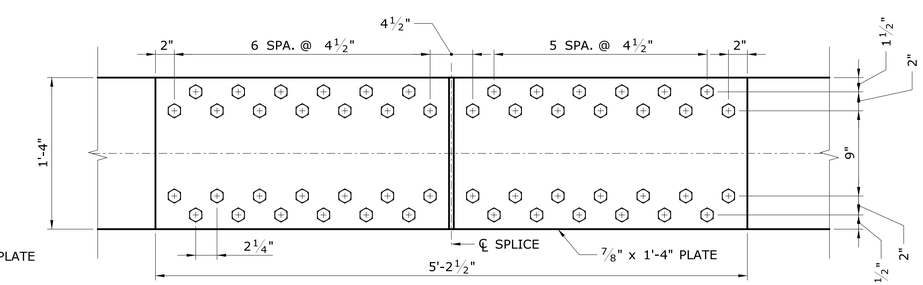

FIELD SPLICE BOTTOM FLANGE PLAN

SCALE: 1 1/2" = 1'-0"

ADDENDUM NO. 2

REV.	DATE	REVISION DESCRIPTION	SHEET NO.
1	12/03/19	REVISIONS PER ADDENDUM NO. 2	13.22

THE INFORMATION, INCLUDING ESTIMATED QUANTITIES OF WORK, SHOWN ON THESE SHEETS IS BASED ON LIMITED INVESTIGATIONS BY THE STATE AND IS IN NO WAY WARRANTED TO INDICATE THE CONDITIONS OF ACTUAL QUANTITIES OF WORK WHICH WILL BE REQUIRED.

Plotted Date: 12/2/2019

DESIGNER/DRAFTER: MW
CHECKED BY: CP
SCALE AS NOTED

STATE OF CONNECTICUT
DEPARTMENT OF TRANSPORTATION

Filename: ...\SB_MSH_Br01743B_155-171_S-22_SDT1_A2.dgn

SIGNATURE/BLOCK:
BL Companies
100 Constitution Plaza
10th Floor
Hartford, CT 06103

PROJECT TITLE:
SAFETY AND OPERATIONAL IMPROVEMENTS ON I-84 BRIDGE NO. 01743B

TOWN: WEST HARTFORD

DRAWING TITLE: STEEL DETAILS - 1

PROJECT NO. 155-171
DRAWING NO. S-22
SHEET NO. 13.22.A2

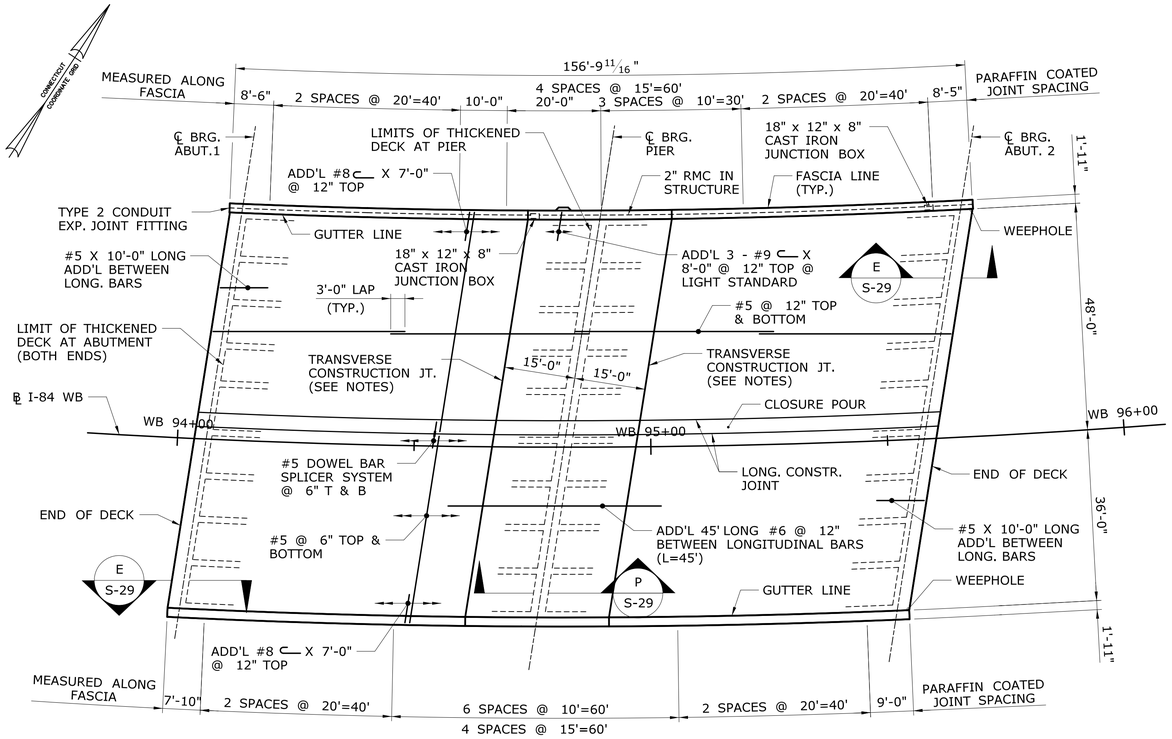

DECK PLAN

SCALE: 1/16" = 1'

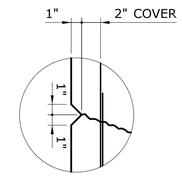

RUSTICATION DETAIL

SCALE: N.T.S.

DECK NOTES:

1. ELEVATIONS SHOWN ON THE DECK PLAN APPLY AT THE TOP OF THE CONCRETE DECK.
2. BRIDGE DECK CONCRETE (SIP-FORMS) SHALL BE USED THROUGHOUT THE ENTIRE DECK.
3. PARAPET CONCRETE SHALL BE USED FOR THE PARAPETS.
4. ALL REINFORCEMENT IN THE CONCRETE DECK AND PARAPETS SHALL BE GALVANIZED, UNLESS OTHERWISE NOTED, AND SHALL BE PAID FOR IN THE ITEM "DEFORMED STEEL BARS - GALVANIZED".
5. MAIN REINFORCEMENT SHALL BE PERPENDICULAR TO THE GIRDERS.
6. ROUGHEN SURFACE, BLAST CLEAN, THEN APPLY A NEAT CEMENT GROUT OR OTHER SUITABLE BONDING MATERIAL IMMEDIATELY PRIOR TO PLACING ADJACENT POUR.
7. FOR CONSTRUCTION STAGING, SEE DWG. NO. S-09.
8. DOWEL BAR SPLICER SHALL BE GALVANIZED AND SHALL BE PAID FOR UNDER THE ITEM "DOWEL BAR SPLICER SYSTEM - GALVANIZED".
9. FOR MEMBRANE WATERPROOFING DETAILS, SEE DWG. NO. S-29.
10. FOR DECK GEOMETRY, SEE LAYOUT PLAN ON STR. DWG. NO. S-05.

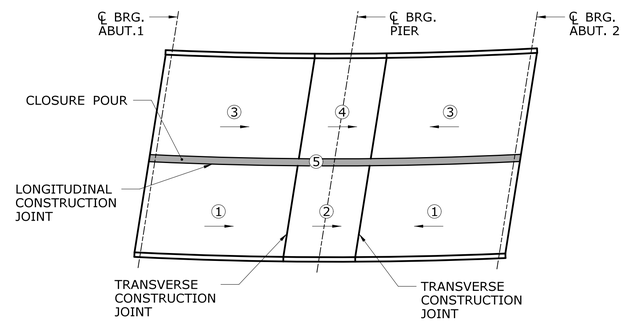

DECK POURING SEQUENCE

SCALE: N.T.S.

DECK POURING SEQUENCE NOTES:

1. POURING SEQUENCE IS AS NUMERICALLY SHOWN ON THE POURING SEQUENCE PLAN AND POURED IN THE DIRECTION SHOWN.
2. DECK SECTIONS OF THE SAME NUMBER SHALL BE PLACED SIMULTANEOUSLY OR CONSECUTIVELY WITH THE CONCRETE REMAINING PLASTIC THROUGHTOUT THE PLACEMENT.
3. ONCE THE PLACING OF THE DECK HAS BEEN STARTED, IT SHALL BE COMPLETED WITHOUT INTERRUPTION.
4. AN ALTERNATE SEQUENCE MAY BE SUBMITTED TO THE ENGINEER FOR APPROVAL PRIOR TO CONCRETE PLACEMENT.
5. POURS MUST BE MADE AT A MINIMUM OF 72 HOURS APART.

TOP OF CONCRETE DECK ELEVATIONS

		SPAN 1										SPAN 2									
GIRDER	CL BRGS ABUT 1	1/10	2/10	3/10	4/10	5/10	6/10	7/10	8/10	9/10	CL BRGS PIER 1	1/10	2/10	3/10	4/10	5/10	6/10	7/10	8/10	9/10	CL BRGS ABUT 2
G1	196.93	196.92	196.91	196.90	196.89	196.87	196.85	196.82	196.79	196.76	196.73	196.69	196.65	196.60	196.55	196.50	196.45	196.39	196.33	196.26	196.19
G2	197.48	197.47	197.47	197.46	197.44	197.42	197.40	197.38	197.35	197.32	197.29	197.25	197.21	197.16	197.12	197.06	197.01	196.95	196.89	196.83	196.76
G3	198.03	198.03	198.02	198.01	198.00	197.98	197.96	197.93	197.91	197.88	197.84	197.81	197.77	197.73	197.68	197.63	197.58	197.52	197.46	197.40	197.33
G4	198.58	198.58	198.57	198.56	198.55	198.53	198.51	198.49	198.47	198.44	198.40	198.37	198.33	198.29	198.24	198.19	198.14	198.09	198.03	197.97	197.90
G5	199.07	199.07	199.06	199.05	199.04	199.02	199.00	198.98	198.95	198.93	198.89	198.86	198.82	198.78	198.74	198.69	198.64	198.58	198.52	198.46	198.40
G6	199.69	199.69	199.68	199.67	199.66	199.64	199.63	199.60	199.58	199.55	199.52	199.49	199.45	199.41	199.37	199.32	199.27	199.22	199.16	199.10	199.04
G7	200.24	200.24	200.24	200.23	200.21	200.20	200.18	200.16	200.14	200.11	200.08	200.05	200.01	199.97	199.93	199.88	199.83	199.78	199.73	199.67	199.61
G8	200.80	200.79	200.79	200.78	200.77	200.76	200.74	200.72	200.69	200.67	200.64	200.61	200.57	200.53	200.49	200.45	200.40	200.35	200.29	200.23	200.17
G9	201.19	201.19	201.19	201.18	201.17	201.16	201.14	201.12	201.10	201.07	201.04	201.01	200.98	200.94	200.90	200.85	200.81	200.76	200.70	200.65	200.59
G10	201.10	201.10	201.10	201.09	201.08	201.07	201.05	201.03	201.01	200.98	200.96	200.93	200.89	200.85	200.81	200.77	200.73	200.68	200.62	200.57	200.51

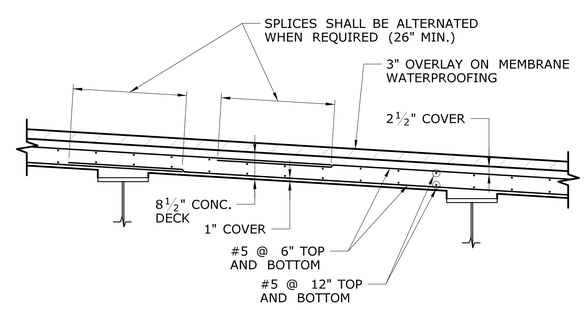

TYPICAL DECK SECTION

SCALE: 1/2" = 1'

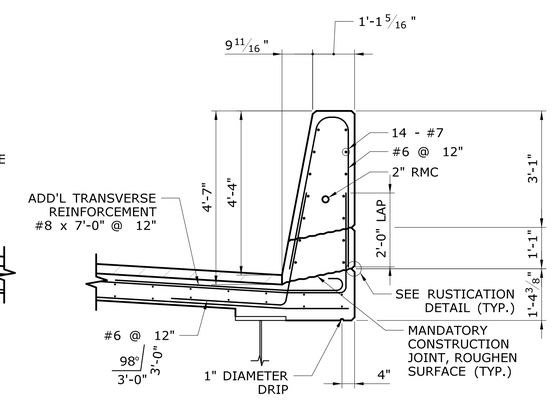

TYPICAL PARAPET SECTION

SCALE: 1/2" = 1'

ADDENDUM NO. 2

REV.	DATE	REVISION DESCRIPTION	SHEET NO.
1	12/03/19	REVISIONS PER ADDENDUM NO. 2	13.28

THE INFORMATION, INCLUDING ESTIMATED QUANTITIES OF WORK, SHOWN ON THESE SHEETS IS BASED ON LIMITED INVESTIGATIONS BY THE STATE AND IS IN NO WAY WARRANTED TO INDICATE THE CONDITIONS OF ACTUAL QUANTITIES OF WORK WHICH WILL BE REQUIRED.

Plotted Date: 12/2/2019

DESIGNER/DRAFTER: KL
CHECKED BY: CP
SCALE AS NOTED

STATE OF CONNECTICUT
DEPARTMENT OF TRANSPORTATION

Filename: ...\SB_MSH_Br01743B_155-171_S-28_DPN_A2.dgn

SIGNATURE/BLOCK:
BL Companies
100 Constitution Plaza
10th Floor
Hartford, CT 06103

PROJECT TITLE:
SAFETY AND OPERATIONAL IMPROVEMENTS ON I-84 BRIDGE NO. 01743B

TOWN: **WEST HARTFORD**

DRAWING TITLE: **DECK PLAN**

PROJECT NO. **155-171**
DRAWING NO. **S-28**
SHEET NO. **13.28.A2**

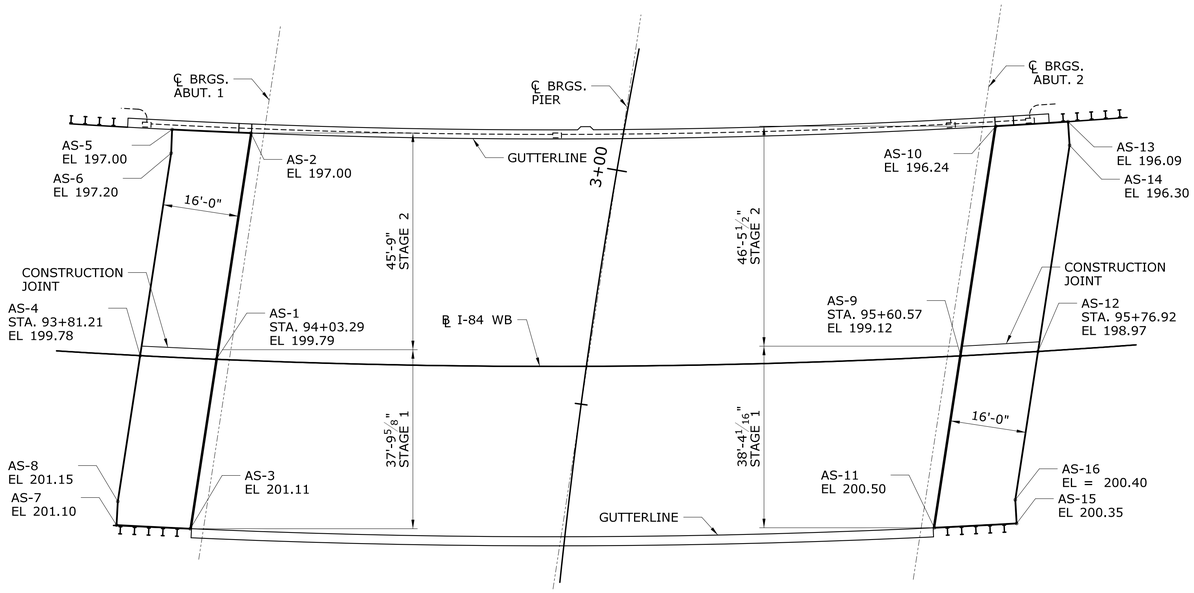

APPROACH SLAB PLAN

SCALE: 1/16" = 1'-0"

APPROACH SLAB COORDINATES		
POINT	NORTHING	EASTING
AS-1	825863.119	997817.913
AS-2	825907.131	997797.940
AS-3	825830.157	997832.872
AS-4	825854.974	997804.039
AS-5	825898.654	997783.595
AS-6	825894.365	997786.163
AS-7	825822.292	997819.409
AS-8	825826.621	997816.906
AS-9	825949.624	997949.189
AS-10	825994.313	997928.908
AS-11	825916.194	997964.360
AS-12	825959.319	997962.359
AS-13	826003.431	997941.147
AS-14	825999.436	997944.153
AS-15	825926.452	997978.417
AS-16	825930.476	997975.449

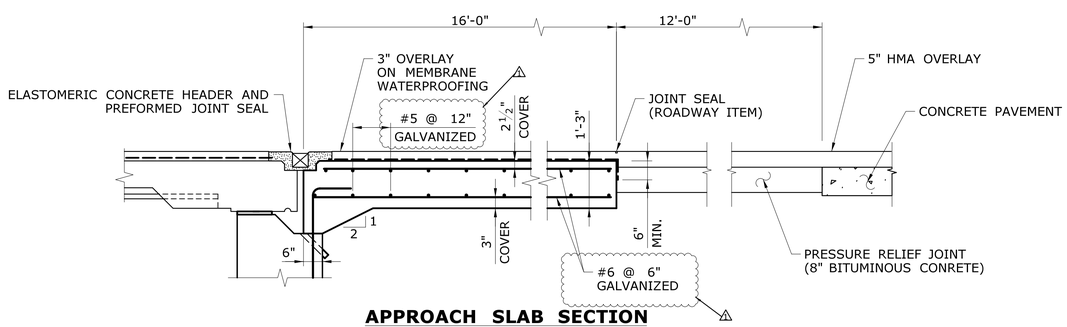

APPROACH SLAB SECTION

SCALE: ½"=1'-0"

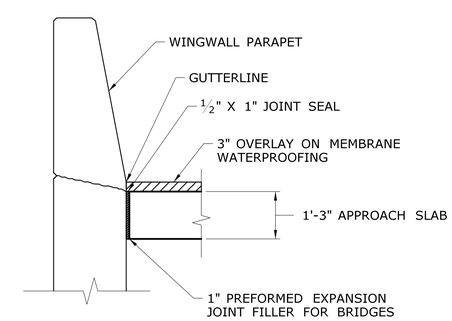

APPROACH SLAB AT GUTTERLINE

SCALE: ½" = 1'-0"

ADDENDUM NO. 2

REV.	DATE	REVISION DESCRIPTION	SHEET NO.
1	12/03/19	REVISIONS PER ADDENDUM NO. 2	13.31

THE INFORMATION, INCLUDING ESTIMATED QUANTITIES OF WORK, SHOWN ON THESE SHEETS IS BASED ON LIMITED INVESTIGATIONS BY THE STATE AND IS IN NO WAY WARRANTED TO INDICATE THE CONDITIONS OF ACTUAL QUANTITIES OF WORK WHICH WILL BE REQUIRED.

Plotted Date: 12/2/2019

DESIGNER/DRAFTER: MW

CHECKED BY: CP

SCALE AS NOTED

STATE OF CONNECTICUT
DEPARTMENT OF TRANSPORTATION

Filename: ...\SB_MSH_Br01743B_155-171_S-31_APPROACH SLABS_A2.dgn

SIGNATURE/BLOCK:

BL Companies
100 Constitution Plaza
10th Floor
Hartford, CT 06103

PROJECT TITLE:

SAFETY AND OPERATIONAL IMPROVEMENTS ON I-84 BRIDGE NO. 01743B

TOWN: **WEST HARTFORD**

DRAWING TITLE: **APPROACH SLAB**

PROJECT NO. **155-171**

DRAWING NO. **S-31**

SHEET NO. **13.31.A2**