05 - ILLUMINATION
INDEX OF DRAWINGS

DRAWING NUMBER	DRAWING TITLE	DRAWING NUMBER	DRAWING TITLE
IDX-03	INDEX OF DRAWINGS		
ILL-01 - ILL-02	ILLUMINATION PLANS		
ILL-03	ELECTRICAL CONNECTIONS		
ILL-04	SERVICE ENTRANCE AND CABINET - TYPE II		
ILL-05	CONCRETE HANDHOLES		

DESIGNED BY:

BL Companies

BL COMPANIES, INC.
355 RESEARCH PARKWAY
MERIDEN, CT 06450

REV.	DATE	REVISION DESCRIPTION	SHEET NO.
-	-	-	-
-	-	-	-
-	-	-	-
-	-	-	-
-	-	-	-
-	-	-	-

THE INFORMATION, INCLUDING ESTIMATED QUANTITIES OF WORK, SHOWN ON THESE SHEETS IS BASED ON LIMITED INVESTIGATIONS BY THE STATE AND IS IN NO WAY WARRANTED TO INDICATE THE CONDITIONS OF ACTUAL QUANTITIES OF WORK WHICH WILL BE REQUIRED.

Plotted Date: 5/30/2019

DESIGNER/DRAFTER: K.H.E.

CHECKED BY: M.F.

STATE OF CONNECTICUT
DEPARTMENT OF TRANSPORTATION

Filename: ...\HW_MSH_99-114-115_IDX-03.dgn

SIGNATURE/ BLOCK:

STATE OF CONNECTICUT · GEORGE L. CONNORS · No. 21019 · LICENSED · PROFESSIONAL ENGINEER

PROJECT TITLE:
RAILROAD-HIGHWAY GRADE CROSSING IMPROVEMENTS
U.S. ROUTES 7&44 (MAIN ST.)

TOWN: NORTH CANAAN

DRAWING TITLE: INDEX OF DRAWINGS

PROJECT NO. 99-144/115

DRAWING NO. IDX-03

SHEET NO. 05.01

GENERAL NOTES

1. THE CONTRACTOR SHALL ORGANIZE HIS WORK SO THAT ANY PORTION OF THE ROADWAY WHICH HAS EXISTING NIGHTTIME ILLUMINATION AND IS OPEN FOR USE REMAINS LIGHTED. THE LIGHTING MAY CONSIST OF: 1) EXISTING LIGHTING, 2) NEW LIGHTING, 3) TEMPORARY LIGHTING OR ANY COMBINATION OF THE ABOVE. IT IS THE CONTRACTOR'S RESPONSIBILITY TO STAGE THE INSTALLATION OF LIGHTS, POLES, CONDUIT, CIRCUITRY, AND ELECTRICAL CONTROLS SO THAT PROPER NIGHTTIME ILLUMINATION IS MAINTAINED. IF IT IS NECESSARY TO INSTALL TEMPORARY POLES, LIGHTS, OR CIRCUITRY, THAT WORK SHALL BE PAID FOR AT THE BID UNIT PRICES FOR THESE ITEMS. THE CONTRACTOR SHALL MAINTAIN ALL LIGHTING WITHIN THE PROJECT LIMITS THROUGHOUT THE DURATION OF THE PROJECT. SEE SECTION 10.00.14 FOR SPECIFIC REQUIREMENTS.
2. ALL ELECTRICAL WORK SHALL CONFORM TO THE NATIONAL ELECTRIC CODE, CONNECTICUT STANDARD SPECIFICATIONS, AND WHERE APPLICABLE, UTILITY COMPANY REGULATIONS.
3. CONDUCTORS SHALL BE COPPER, INSULATION TYPE XHHN AND RATED FOR 600 VOLTS. INSULATION SHALL BE COLORED CROSS LINKED POLYETHYLENE (XLP), SINGLE PHASE.
4. INSTALL ONE NUMBER 8 BARE COPPER GROUNDING CONDUCTOR THROUGHOUT ALL LIGHTING CIRCUITS.
5. LOCATION OF EXISTING ILLUMINATION ON PLANS IS APPROXIMATE.
6. TAPE ALL UNUSED CONDUCTORS.
7. PRIOR TO TRENCHING THE CONTRACTOR SHALL CONTACT "CALL BEFORE YOU DIG" AND CONNDOT DISTRICT 4 ELECTRICAL MAINTENANCE TO HAVE ALL EXISTING UNDERGROUND ELECTRICAL FACILITIES PROPERLY MARKED OUT INCLUDING BUT NOT LIMITED TO: TRAFFIC SIGNAL AND INTERCONNECT CABLES, INCIDENT MANAGEMENT SYSTEM AND FIBER OPTIC CABLES, AND EXISTING ILLUMINATION CIRCUITS. THE CONTRACTOR SHALL BE RESPONSIBLE FOR REPAIR OR REPLACEMENT OF ALL EXISTING FACILITIES DAMAGED BY HIS TRENCHING OPERATION.
8. ALL CONDUCTOR SPLICES IN HANDHOLES SHALL BE MADE WITH INSULATED SUBMERSIBLE CONNECTORS.
9. ALL PVC CONDUIT SHALL BE SCHEDULE 80.
10. THE CONTRACTOR SHALL CONTACT NAME AT SUSAN WASILUS AT (860) 496-5126 TO COORDINATE THE INSTALLATION OF SERVICE CABINET FEED.
11. A GFI OUTLET SHALL BE INSTALLED ON EACH POLE.

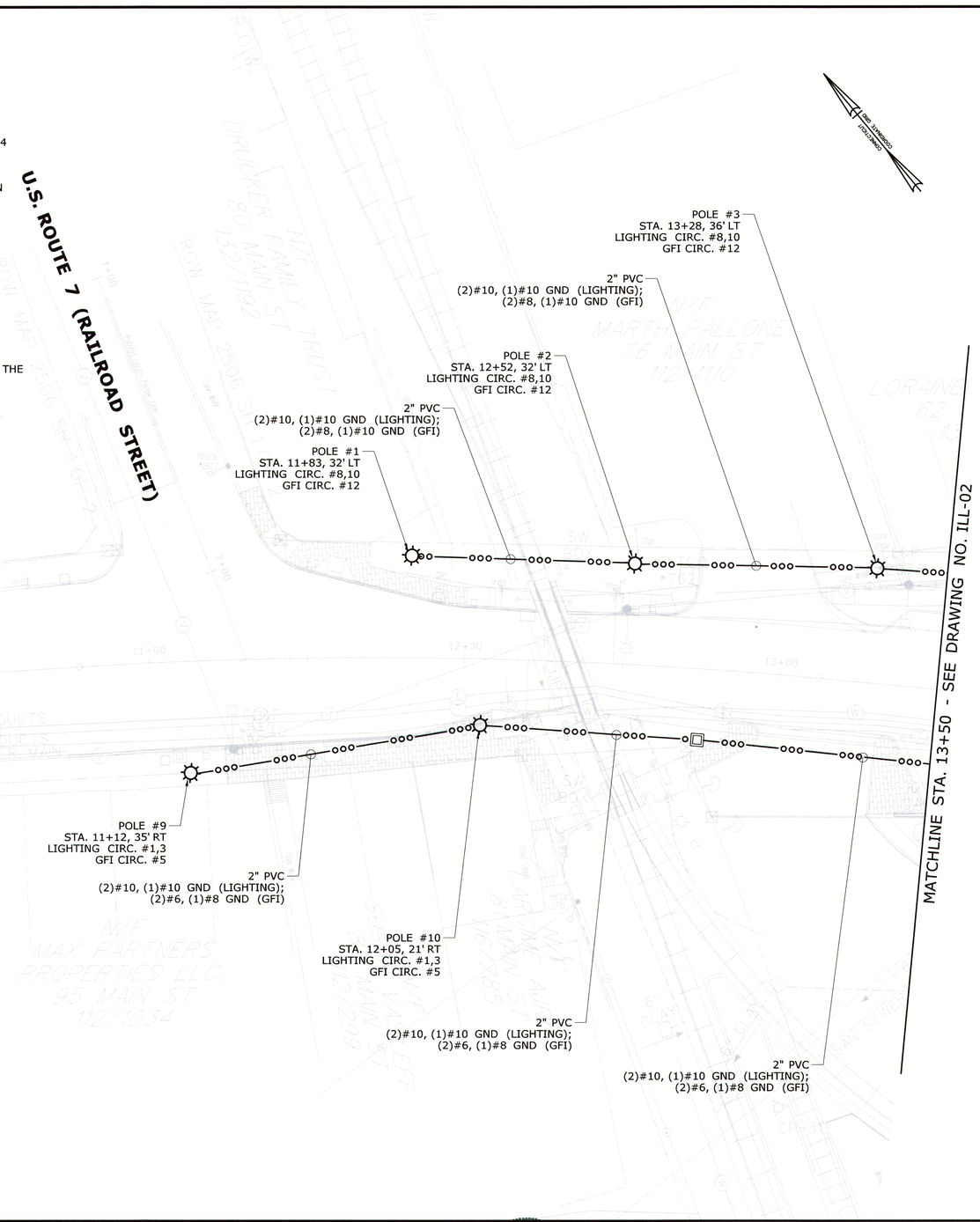

PANEL:	LL											
AMPS/MAINS:			100A/80A MCB			kAIC:		22				
VOLTAGE/PHASE/WIRE			208/120V, 3ø, 4W			MOUNTING:		SURFACE				
FEED:			NEMA 4X			LOCATION:		UTILITY POLE				
	CIRCUIT BREAKER				PHASE	PHASE	PHASE			CIRCUIT BREAKER		
Pos.	AMP	POLES	LOAD DESCRIPTION	KVA	A	B	C	KVA	LOAD DESCRIPTION	POLES	AMP	Pos.
1	20	2	POLE LIGHTING (5)	0.35	0.63			0.28	POLE LIGHTING (4)	2	20	2
3				0.35		0.63		0.28				4
5	20	1	GFI/WP REC (5)	0.90			1.62	0.72	GFI/WP REC (4)	1	20	6
7	20	1	LIGHTING CONTACTORS	0.50	0.78			0.28	POLE LIGHTING (4)	2	20	8
9	20	1	SPARE			0.28		0.28				10
11	20	1	SPARE				0.90	0.90	GFI/WP REC (4)	1	20	12

LEGEND

- 2" PVC IN TRENCH
- DECORATIVE LIGHT POLE AND FIXTURE (2 70-WATT LED)
- CONCRETE HANDHOLE
- SERVICE ENTRANCE AND CABINET - TYPE II

REV.	DATE	REVISION DESCRIPTION	SHEET NO.
-	-	-	-
-	-	-	-
-	-	-	-
-	-	-	-
-	-	-	-
-	-	-	-

THE INFORMATION, INCLUDING ESTIMATED QUANTITIES OF WORK, SHOWN ON THESE SHEETS IS BASED ON LIMITED INVESTIGATIONS BY THE STATE AND IS IN NO WAY WARRANTED TO INDICATE THE CONDITIONS OF ACTUAL QUANTITIES OF WORK WHICH WILL BE REQUIRED.

Plotted Date: 5/30/2019

DESIGNER/DRAFTER: C.L.M.
CHECKED BY: M.F.
SCALE IN FEET 0 20 40
SCALE 1"=20'

STATE OF CONNECTICUT
DEPARTMENT OF TRANSPORTATION

Filename: ...\HW_MSH_99-114-115_ILL-01.dgn

SIGNATURE/BLOCK:

STATE OF CONNECTICUT · MARK JOHANNES FRANCIS · No. 18530 · LICENSED PROFESSIONAL ENGINEER

PROJECT TITLE:
RAILROAD-HIGHWAY GRADE CROSSING IMPROVEMENTS U.S. ROUTES 7&44 (MAIN ST.)

TOWN: **NORTH CANAAN**

DRAWING TITLE: **ILLUMINATION PLAN**

PROJECT NO. 99-114/115
DRAWING NO. ILL-01
SHEET NO. 05.02

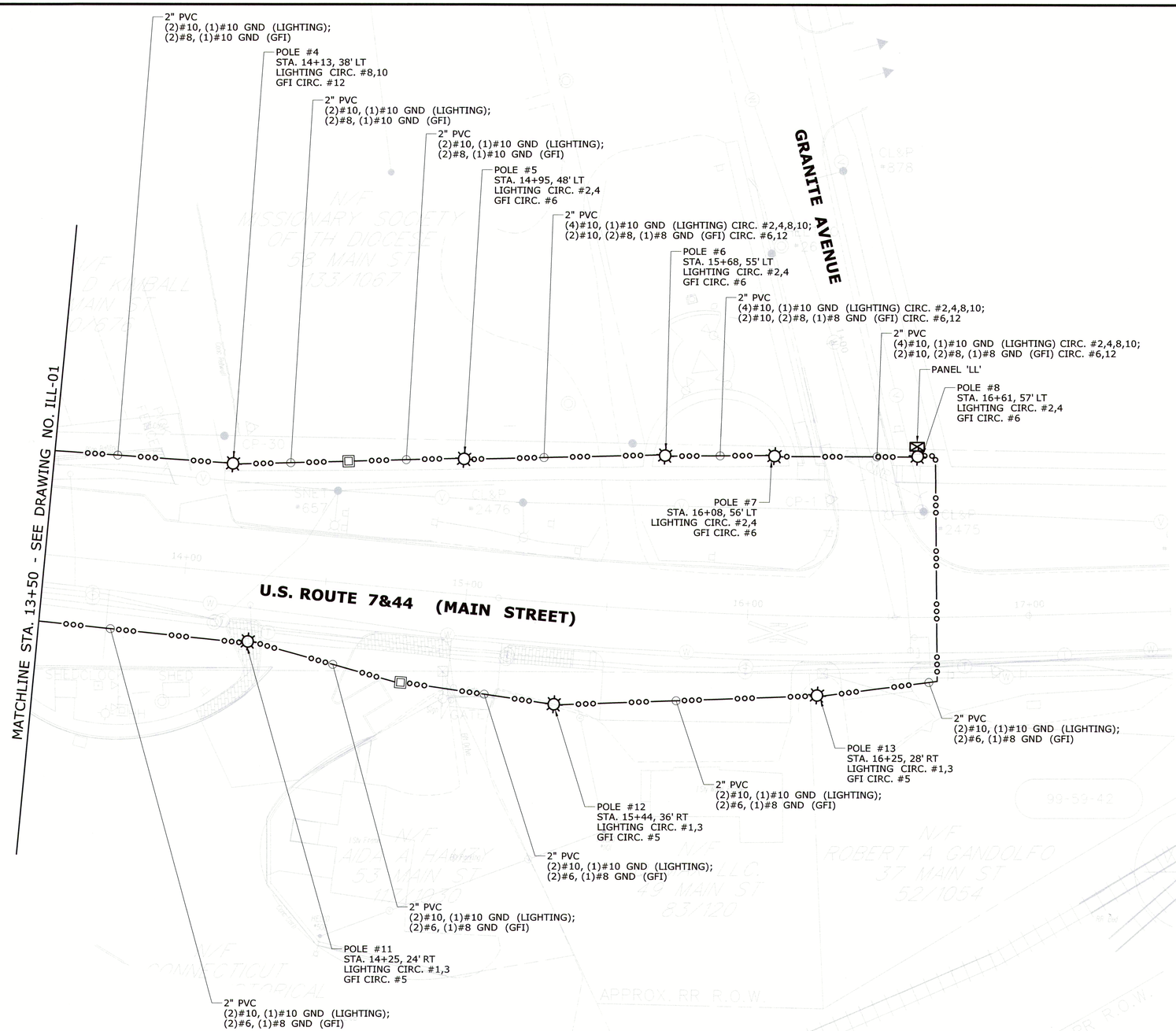

LEGEND

—ooo—	2" PVC IN TRENCH
☼	DECORATIVE LIGHT POLE AND FIXTURE (2 70-WATT LED)
▣	CONCRETE HANDHOLE
⊠	SERVICE ENTRANCE AND CABINET - TYPE II

REV.	DATE	REVISION DESCRIPTION	SHEET NO.
-	-	-	-
-	-	-	-
-	-	-	-
-	-	-	-
-	-	-	-
-	-	-	-

THE INFORMATION, INCLUDING ESTIMATED QUANTITIES OF WORK, SHOWN ON THESE SHEETS IS BASED ON LIMITED INVESTIGATIONS BY THE STATE AND IS IN NO WAY WARRANTED TO INDICATE THE CONDITIONS OF ACTUAL QUANTITIES OF WORK WHICH WILL BE REQUIRED.

Plotted Date: 5/30/2019

DESIGNER/DRAFTER: **C.L.M.**

CHECKED BY: **M.F.**

SCALE IN FEET 0 20 40

SCALE 1"=20'

STATE OF CONNECTICUT
DEPARTMENT OF TRANSPORTATION

Filename: ...\HW_MSH_99-114-115_ILL-02.dgn

SIGNATURE/BLOCK:

STATE OF CONNECTICUT
MICHAEL FARRAR
NO. 22010
LICENSED PROFESSIONAL ENGINEER

PROJECT TITLE:

RAILROAD-HIGHWAY GRADE CROSSING IMPROVEMENTS U.S. ROUTES 7&44 (MAIN ST.)

TOWN: **NORTH CANAAN**

DRAWING TITLE: **ILLUMINATION PLAN**

PROJECT NO. **99-114/115**

DRAWING NO. **ILL-02**

SHEET NO. **05.03**

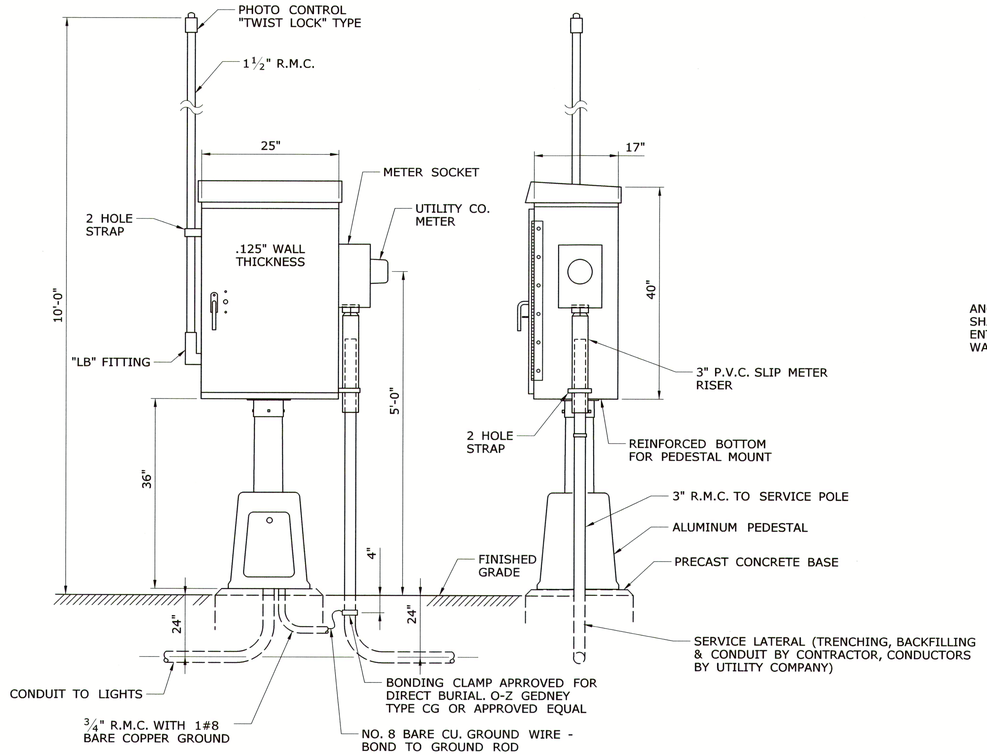

SERVICE ENTRANCE AND CABINET TYPE II

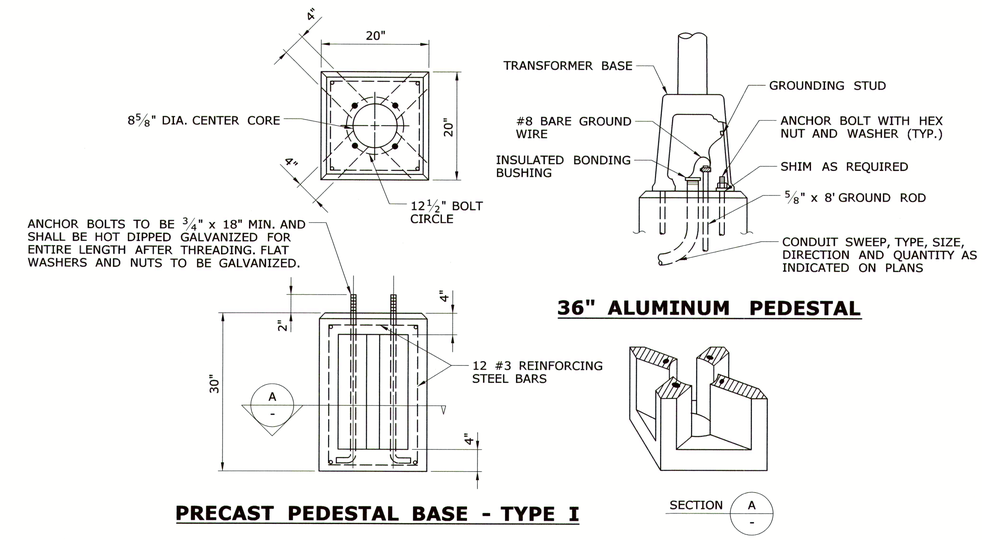

36" ALUMINUM PEDESTAL

PRECAST PEDESTAL BASE - TYPE I

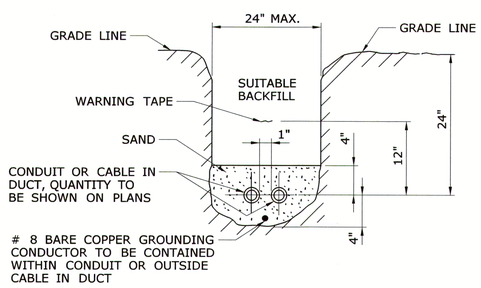

BURIED CONDUIT OR CABLE IN DUCT

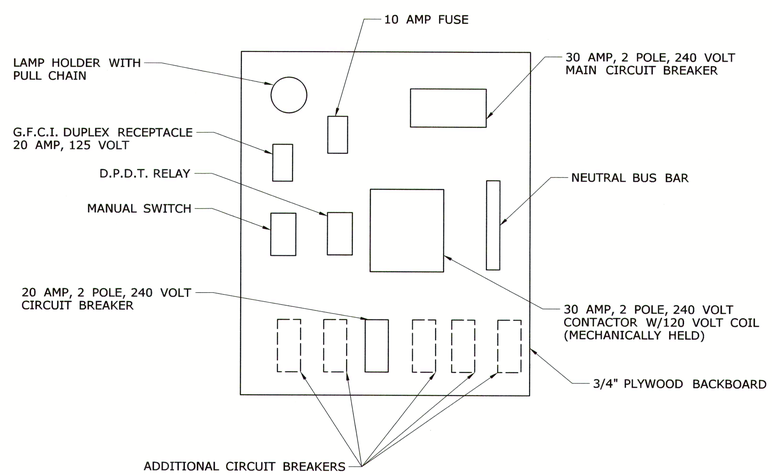

PANEL LAYOUT

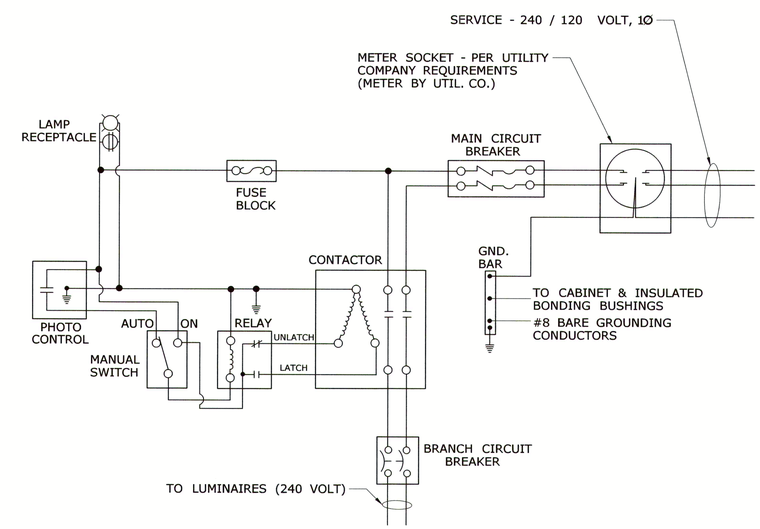

WIRING DIAGRAM

REV.	DATE	REVISION DESCRIPTION	SHEET NO.

THE INFORMATION, INCLUDING ESTIMATED QUANTITIES OF WORK, SHOWN ON THESE SHEETS IS BASED ON LIMITED INVESTIGATIONS BY THE STATE AND IS IN NO WAY WARRANTED TO INDICATE THE CONDITIONS OF ACTUAL QUANTITIES OF WORK WHICH WILL BE REQUIRED.

Plotted Date: 5/30/2019

DESIGNER/DRAFTER: MWD

CHECKED BY: MWD

NO SCALE

STATE OF CONNECTICUT
DEPARTMENT OF TRANSPORTATION

Filename: ...\HW_MSH_99-114-115_ILL-04 SERVICE ENTRANCE & CABINET - TYPE II.dgn

SIGNATURE/BLOCK:

STATE OF CONNECTICUT · JOHN H. JOHANSEN · No. 22810 · LICENSED PROFESSIONAL ENGINEER

PROJECT TITLE:

RAILROAD-HIGHWAY GRADE CROSSING IMPROVEMENTS U.S. ROUTES 7&44 (MAIN ST.)

TOWN: **NORTH CANAAN**

DRAWING TITLE: **SERVICE ENTRANCE AND CABINET - TYPE II**

PROJECT NO. **99-144/155**

DRAWING NO. **ILL-04**

SHEET NO. **05.05**

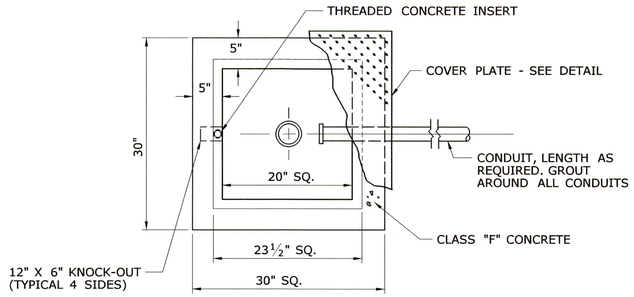

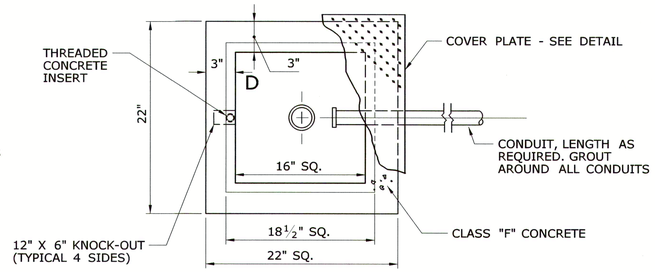

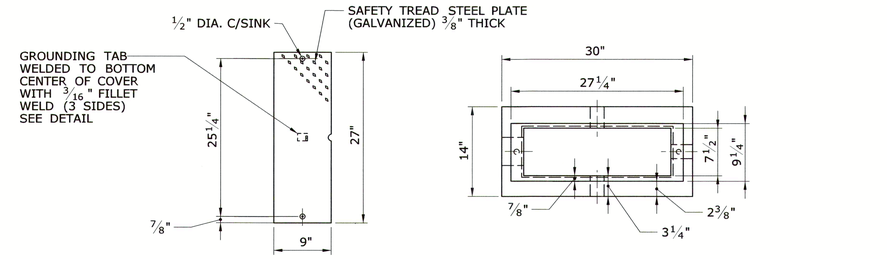

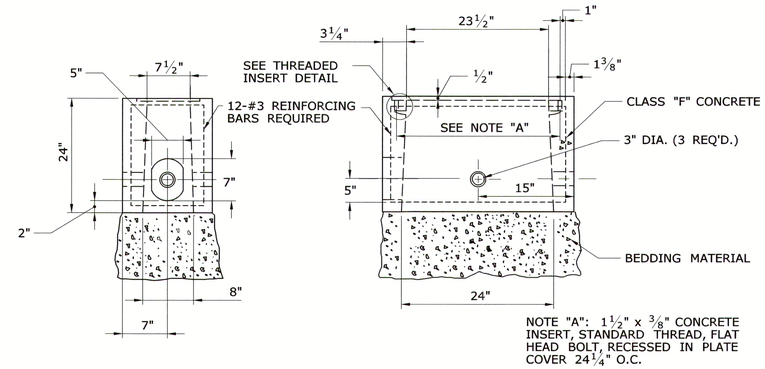

CONCRETE HANDHOLE - TYPE II

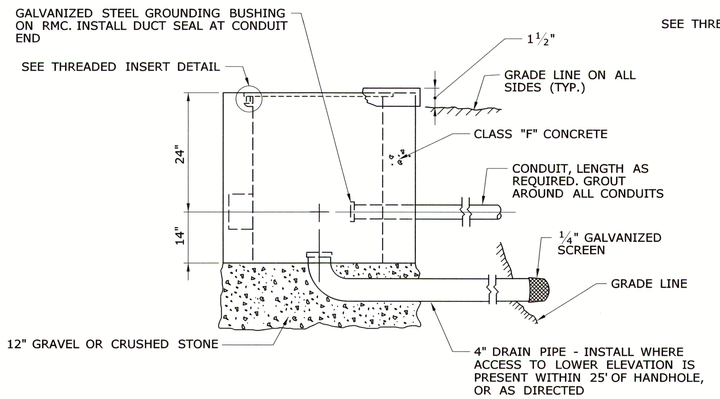

CONCRETE HANDHOLE - TYPE I

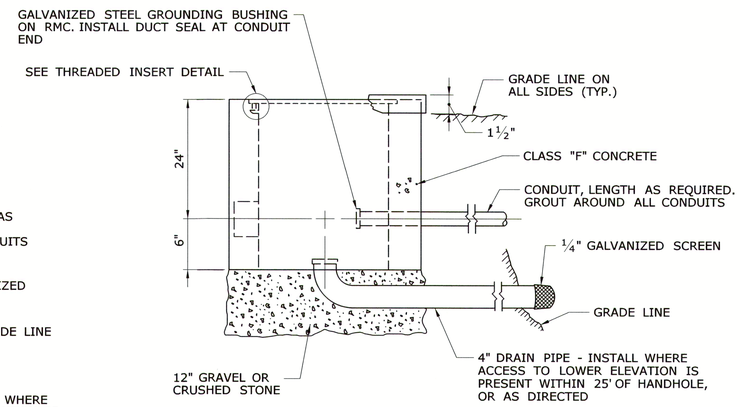

CONCRETE HANDHOLE - TYPE III

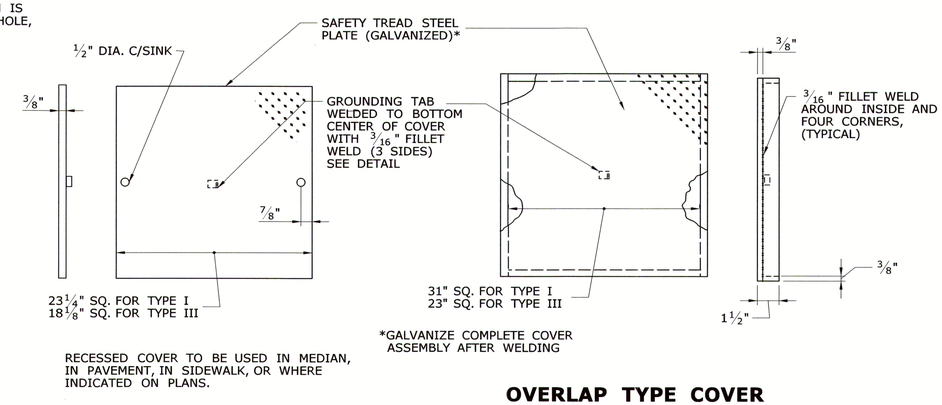

RECESSED TYPE COVER

OVERLAP TYPE COVER

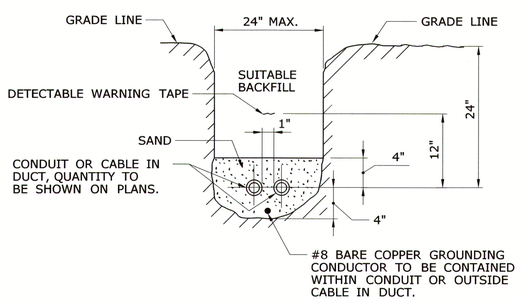

BURIED CONDUIT OR CABLE IN DUCT

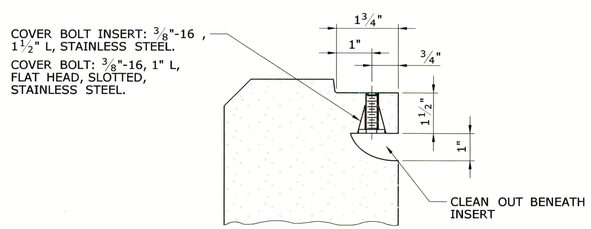

THREADED INSERT

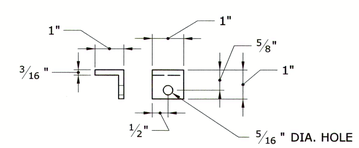

STEEL GROUNDING TAB

NOTE:
ATTACH 72" LENGTH OF NO. 8 GROUND WIRE TO GROUNDING TAB WITH ONE HOLE LUG, ¼" x ¾" LG. SST HEX HEAD BOLT, AND SST FLAT WASHER. ATTACH FREE END OF GROUND WIRE TO NO. 8 BARE GROUND WIRE IN HANDHOLE.

REV.	DATE	REVISION DESCRIPTION	SHEET NO.

THE INFORMATION, INCLUDING ESTIMATED QUANTITIES OF WORK, SHOWN ON THESE SHEETS IS BASED ON LIMITED INVESTIGATIONS BY THE STATE AND IS IN NO WAY WARRANTED TO INDICATE THE CONDITIONS OF ACTUAL QUANTITIES OF WORK WHICH WILL BE REQUIRED.

Plotted Date: 5/30/2019

DESIGNER/DRAFTER: MWD
CHECKED BY: MWD
NO SCALE

STATE OF CONNECTICUT
DEPARTMENT OF TRANSPORTATION

Filename: ...\HW_MSH_99-114-115_ILL-05 CONCRETE HANDHOLES.dgn

SIGNATURE/BLOCK:

STATE OF CONNECTICUT · MODESTO H. JOHNSON · No. 20148 · LICENSED PROFESSIONAL ENGINEER

PROJECT TITLE:
RAILROAD-HIGHWAY GRADE CROSSING IMPROVEMENTS
U.S. ROUTES 7&44 (MAIN ST.)

TOWN: NORTH CANAAN

DRAWING TITLE: CONCRETE HANDHOLES

PROJECT NO. 99-144/115
DRAWING NO. ILL-05
SHEET NO. 05.06

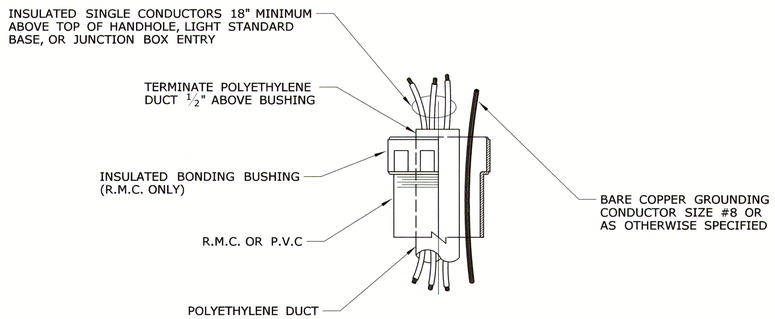

CABLE IN DUCT TERMINATION AT LIGHT STANDARD BASE, HANDHOLE AND CAST IRON JUNCTION BOX

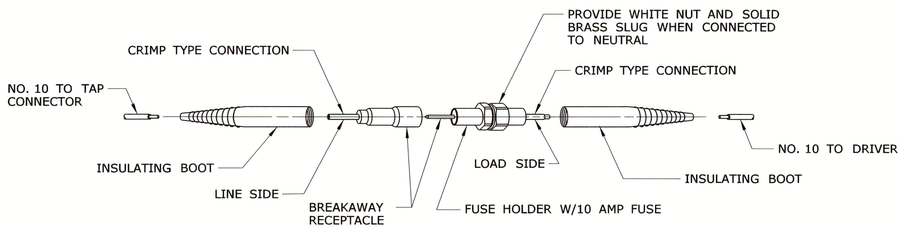

BREAKAWAY FUSE CONNECTOR

TO BE USED WITH TWIN LUMINAIRE LIGHT STANDARDS (4 REQUIRED PER LIGHT STANDARD) AND UNDERBRIDGE LUMINAIRES

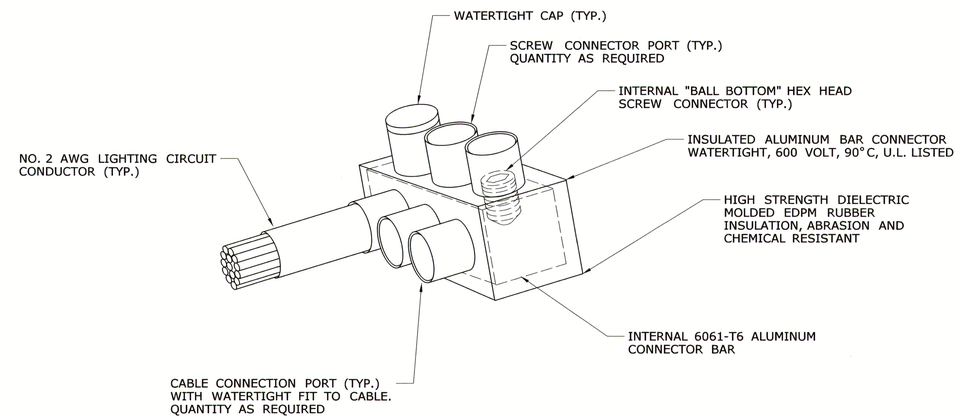

WATERTIGHT CONNECTOR

TO BE USED IN HANDHOLES AND JUNCTION BOXES

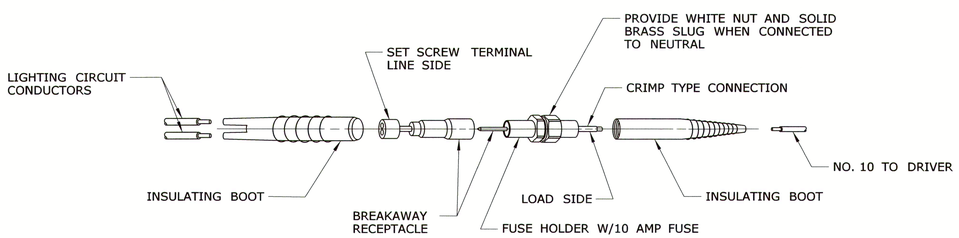

BREAKAWAY FUSE CONNECTOR

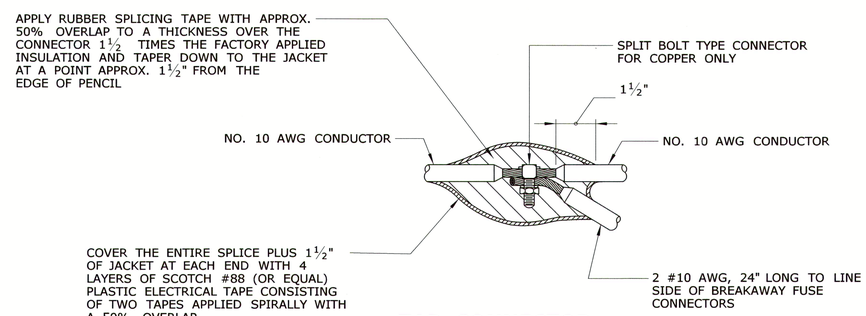

TAP CONNECTOR

TO BE USED W/TWIN LUMINAIRE LIGHT STANDARDS

REV.	DATE	REVISION DESCRIPTION	SHEET NO.

THE INFORMATION, INCLUDING ESTIMATED QUANTITIES OF WORK, SHOWN ON THESE SHEETS IS BASED ON LIMITED INVESTIGATIONS BY THE STATE AND IS IN NO WAY WARRANTED TO INDICATE THE CONDITIONS OF ACTUAL QUANTITIES OF WORK WHICH WILL BE REQUIRED.

Plotted Date: 5/30/2019

DESIGNER/DRAFTER: MWD
CHECKED BY: MWD

NO SCALE

STATE OF CONNECTICUT
DEPARTMENT OF TRANSPORTATION

Filename: ...\HW_MSH_99-114-115_ILL-03 ELECTRICAL CONNECTIONS.dgn

SIGNATURE/BLOCK:

STATE OF CONNECTICUT · DEREK J. JOHANSEN · No. 19189 · LICENSED PROFESSIONAL ENGINEER

PROJECT TITLE:
RAILROAD-HIGHWAY GRADE CROSSING IMPROVEMENTS U.S. ROUTES 7&44 (MAIN ST.)

TOWN: **NORTH CANAAN**

DRAWING TITLE: **ELECTRICAL CONNECTIONS**

PROJECT NO. 99-144/155
DRAWING NO. ILL-03
SHEET NO. 05.04