04-HIGHWAYS

INDEX OF DRAWINGS

DRAWING NUMBER	DRAWING TITLE	DRAWING NUMBER	DRAWING TITLE
INX-01	HIGHWAY INDEX SHEET		
DGS-01 - DGS-12	DRAINAGE GUIDE SHEETS		
MDS-01	CONCRETE WASHOUT AREA		
TYP-01	TYPICAL SECTIONS		
ALN-01	ALIGNMENT SHEET		
DRG-01	DRAINAGE DESIGN		
PLN-01	PLAN SHEET		
PRO-1	PROFILE		
XSC-01 - XCS-10	CROSS SECTIONS		

THE DESIGN APPEARS TO CONFORM TO APPLICABLE CRITERIA. APPROVAL IS NOT TO BE CONSTRUED TO MEAN THAT ALL ASPECTS OF THE DESIGN HAVE BEEN PERSONALLY CHECKED BY THE UNDERSIGNED.

Michael S. Cherpak, P.E.
FOR
2019.08.14 08:28:01-04'00'

TRANSPORTATION PRINCIPAL ENGINEER

REV.	DATE	REVISION DESCRIPTION	SHEET NO.

THE INFORMATION, INCLUDING ESTIMATED QUANTITIES OF WORK, SHOWN ON THESE SHEETS IS BASED ON LIMITED INVESTIGATIONS BY THE STATE AND IS IN NO WAY WARRANTED TO INDICATE THE CONDITIONS OF ACTUAL QUANTITIES OF WORK WHICH WILL BE REQUIRED.

Plotted Date: 8/14/2019

DESIGNER/DRAFTER: RF

CHECKED BY: SN

STATE OF CONNECTICUT
DEPARTMENT OF TRANSPORTATION

Filename: ...\HW_MSH_0123_0066_INX-01.dgn

SIGNATURE/ BLOCK:

OFFICE OF ENGINEERING

APPROVED BY:

PROJECT TITLE:

REPLACEMENT OF BRIDGE
00681 - HUNTINGTON RD. (RTE.14)
OVER THE MERRICK BROOK

TOWN:

TOWN OF SCOTLAND

DRAWING TITLE:

HIGHWAY INDEX SHEET

PROJECT NO. 0123-0066

DRAWING NO. INX-01

SHEET NO. 4.01

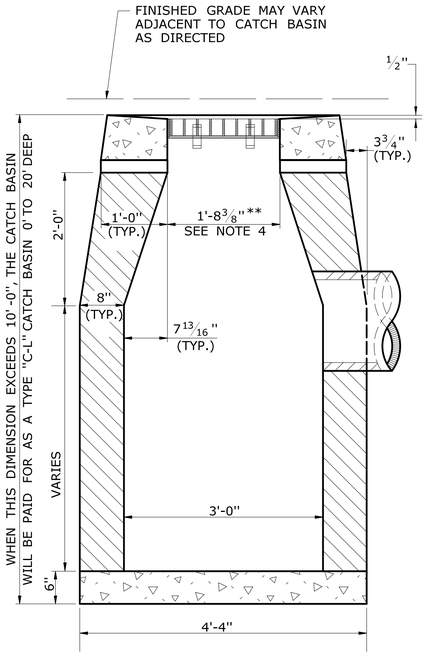

SECTION B

TYPE "C-L" CATCH BASIN

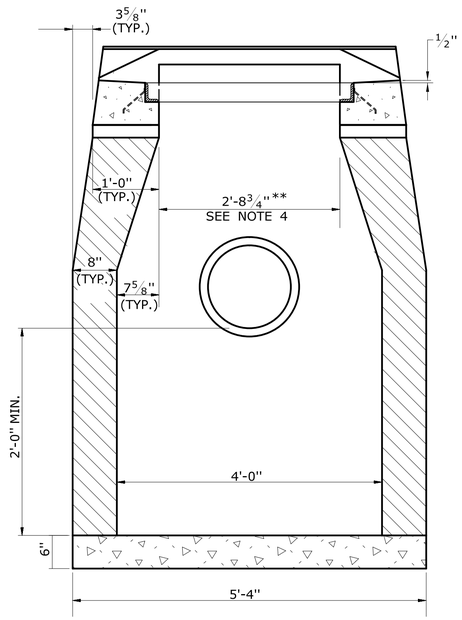

SECTION A

TYPE "C" & "C-L" CATCH BASIN (TYPE "C" TOP SHOWN)

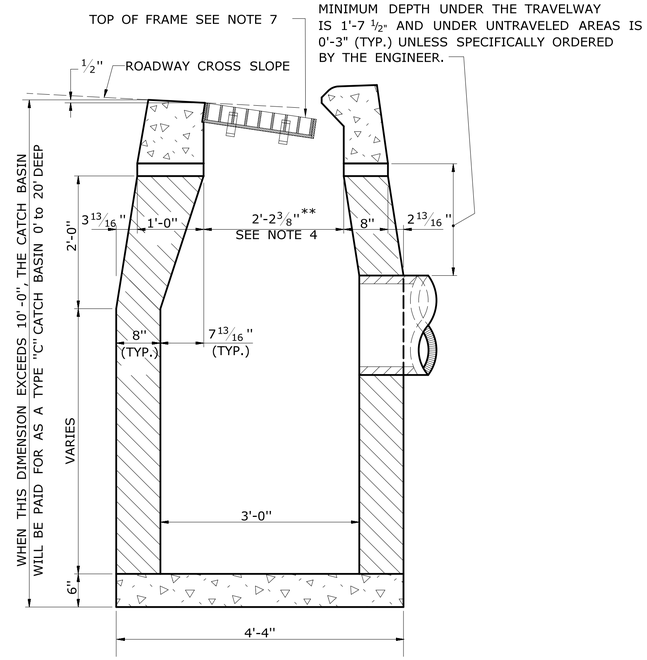

SECTION B

TYPE "C" CATCH BASIN

GENERAL NOTES:

1. FOR CATCH BASIN TOPS, SEE DRAWING NO. DGS-07.
2. ALL FACES OF STRUCTURES IN CONTACT WITH CONCRETE PAVEMENT SHALL BE COVERED WITH A LAYER OF TAR PAPER OR APPROVED EQUAL.
3. USE 6'-0" ON UPGRADE SIDE (SEE PLAN VIEW) OF CONTINUOUS GRADE AND 1'-0" ON DOWNGRADE SIDE OF CONTINUOUS GRADE OR AS DIRECTED BY THE ENGINEER.
4. IF MASONRY UNITS ARE REQUIRED, THE BASIN SHALL BE CONSTRUCTED IN CONFORMANCE WITH THE DIMENSIONS SHOWN. CORBELLING SHALL BE PERMITTED TO A MAXIMUM OF 3". NO PROJECTION SHALL EXTEND INSIDE THE LIMITS FOR THE CATCH BASIN OPENINGS SHOWN IN THE SECTION VIEWS **.
5. WALL THICKNESS OF ALL CATCH BASINS OVER 10' DEEP SHALL BE INCREASED TO 12" THICK. INSIDE DIMENSION SHALL REMAIN THE SAME. 12" THICKNESS SHALL START AFTER THE FIRST 10'.
6. SPACERS CAN BE EITHER CONCRETE MASONRY UNIT OR PRECAST WITH THE REQUIRED REINFORCING (RECOMMENDED BY THE MANUFACTURER) AS NEEDED TO PROVIDE THE PROPER GRADE SHOWN ON THE PLANS.
7. TOP OF FRAME ELEVATION SHALL BE MEASURED IN THE CENTER OF GRATE AT GUTTER LINE.

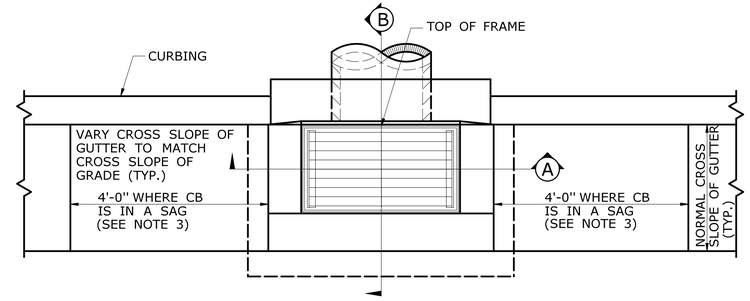

PLAN

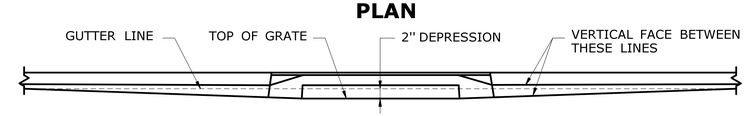

CATCH BASINS IN A LINE WITH 4" CONCRETE PARK CURBING OR 4" BITUMINOUS CONCRETE PARK CURBING

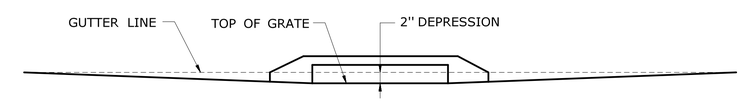

CATCH BASINS WHERE NO CURBING OF ANY TYPE EXISTS OR IS PROPOSED

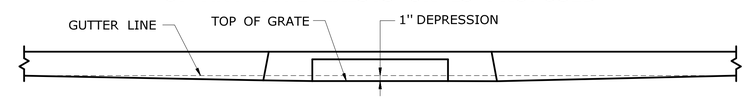

CATCH BASINS IN A LINE WITH 6" CONCRETE CURBING OR 6" STONE CURBING

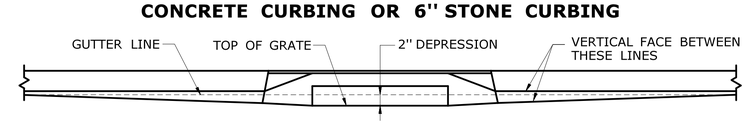

CATCH BASINS IN A LINE WITH 6" BITUMINOUS CONCRETE LIP CURBING (MACHINE FORMED)

DETAILS OF DEPRESSED GUTTER STRIP FOR TYPE "C" CATCH BASIN

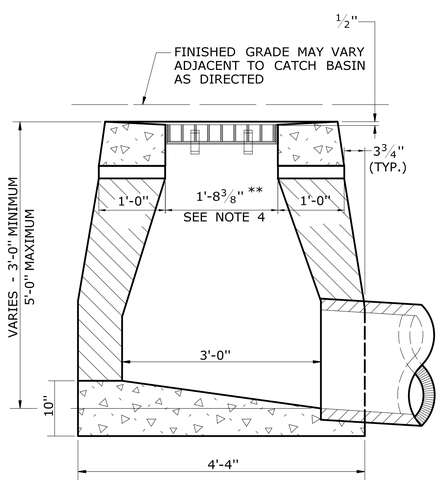

SECTION B

TYPE "C-L" DROP INLET

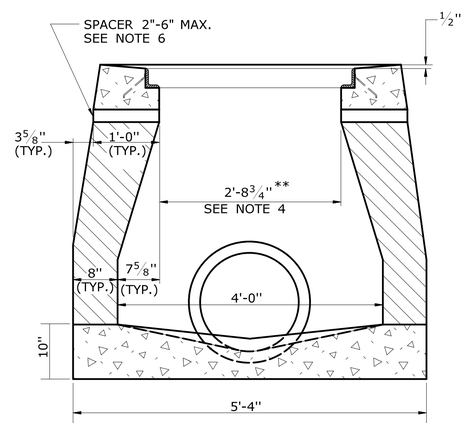

SECTION A

TYPE "C" & "C-L" DROP INLET (TYPE "C-L" TOP SHOWN)

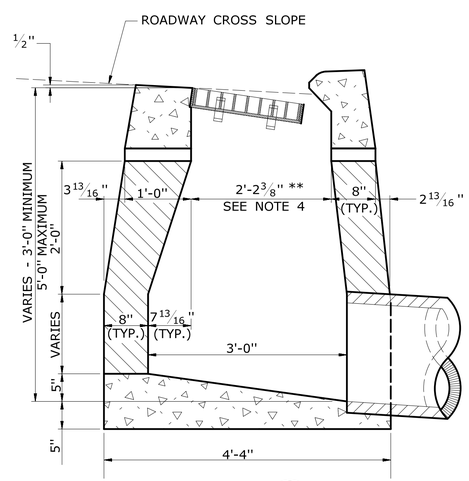

SECTION B

TYPE "C" DROP INLET

REV.	DATE	REVISION DESCRIPTION	SHEET NO.

THE INFORMATION, INCLUDING ESTIMATED QUANTITIES OF WORK, SHOWN ON THESE SHEETS IS BASED ON LIMITED INVESTIGATIONS BY THE STATE AND IS IN NO WAY WARRANTED TO INDICATE THE CONDITIONS OF ACTUAL QUANTITIES OF WORK WHICH WILL BE REQUIRED.

Plotted Date: 8/14/2019

DESIGNER/DRAFTER: RF
CHECKED BY: SN

STATE OF CONNECTICUT
DEPARTMENT OF TRANSPORTATION

Filename: ...\Plan\CTDOT_HIGHWAY_GD.dgn

SIGNATURE/BLOCK: OFFICE OF ENGINEERING
APPROVED BY: Matthew Vaz

PROJECT TITLE: REPLACEMENT OF BRIDGE 00681 - HUNTINGTON RD. (RTE.14) OVER THE MERRICK BROOK

TOWN: TOWN OF SCOTLAND

DRAWING TITLE: CATCH BASIN AND DROP INLET TYPES

PROJECT NO. 0123-0066
DRAWING NO. DGS-01
SHEET NO. 4.02

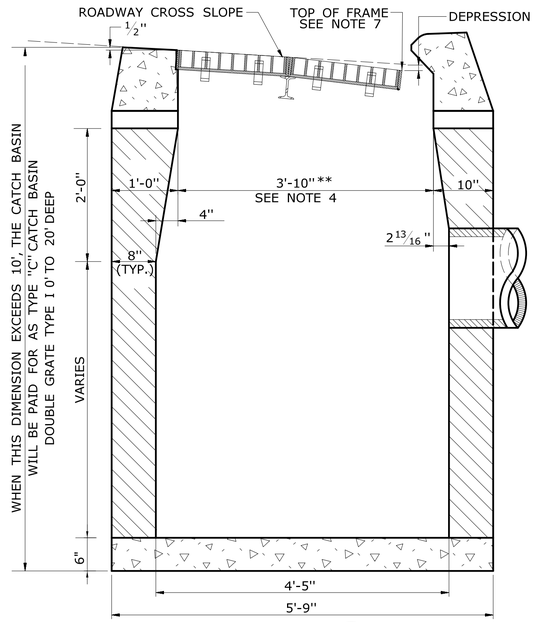

SECTION B

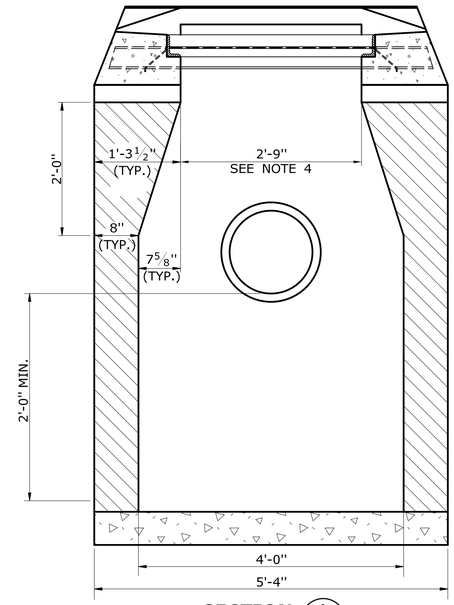

SECTION A

TYPE "C" CATCH BASIN DOUBLE GRATE - TYPE I

GENERAL NOTES:

1. FOR CATCH BASIN TOPS, SEE DRAWING NO. DGS-07.
2. ALL FACES OF THE STRUCTURE IN CONTACT WITH CONCRETE PAVEMENT SHALL BE COVERED WITH A LAYER OF TAR PAPER OR APPROVED EQUAL.
3. USE 6'-0" ON THE UPGRADE SIDE (SEE PLAN VIEW) OF CONTINUOUS GRADE AND 1'-0" ON DOWNGRADE SIDE OF CONTINUOUS GRADE AS DIRECTED BY THE ENGINEER.
4. IF MASONRY UNITS ARE REQUIRED, THE BASIN SHALL BE CONSTRUCTED IN CONFORMANCE WITH DIMENSIONS SHOWN. CORBELLING SHALL BE PERMITTED TO A MAXIMUM OF 3". NO PROJECTION SHALL EXTEND INSIDE THE LIMITS BY **.
5. WALL THICKNESS OF ALL CATCH BASINS OVER 10' DEEP SHALL BE INCREASED TO 12" THICK. INSIDE DIMENSIONS SHALL REMAIN THE SAME. 12" THICKNESS SHALL START AFTER THE FIRST 10'.
6. SPACERS CAN BE EITHER CONCRETE MASONRY UNIT OR PRECAST WITH THE REQUIRED REINFORCING (RECOMMENDED BY THE MANUFACTURER) AS NEEDED TO PROVIDE THE PROPER GRADE SHOWN ON THE PLANS.
7. TOP OF FRAME ELEVATION SHALL BE MEASURED IN THE CENTER OF THE GRATE AT THE GUTTER LINE.

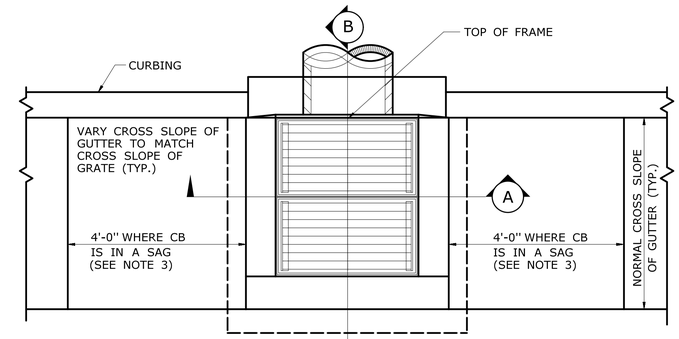

PLAN

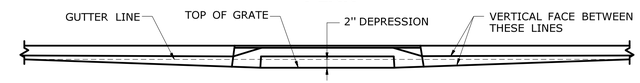

CATCH BASINS IN A LINE WITH 4" CONCRETE PARK CURBING OR 4" BITUMINOUS CONCRETE PARK CURBING

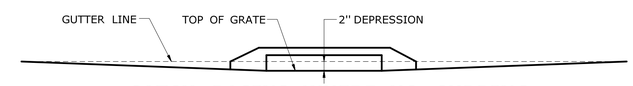

CATCH BASINS WHERE NO CURBING OF ANY TYPE EXISTS OR IS PROPOSED

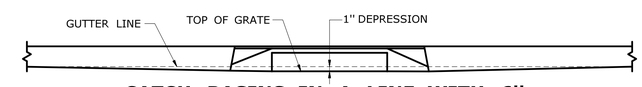

CATCH BASINS IN A LINE WITH 6" CONCRETE CURBING OR 6" STONE CURBING

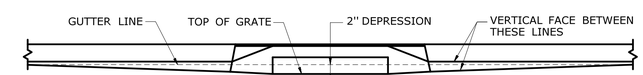

CATCH BASINS IN A LINE WITH 6" BITUMINOUS CONCRETE LIP CURBING (MACHINE FORMED)

DETAILS OF DEPRESSED GUTTER STRIP FOR TYPE "C" CATCH BASIN

FINISHED GRADE MAY VARY ADJACENT TO CATCH BASIN AS DIRECTED

MINIMUM DEPTH UNDER THE TRAVEL WAY IS 1'-7 1/2" AND UNDER UNTRAVELED AREAS IS 0'-3" (TYP.) UNLESS SPECIFICALLY ORDERED BY THE ENGINEER.

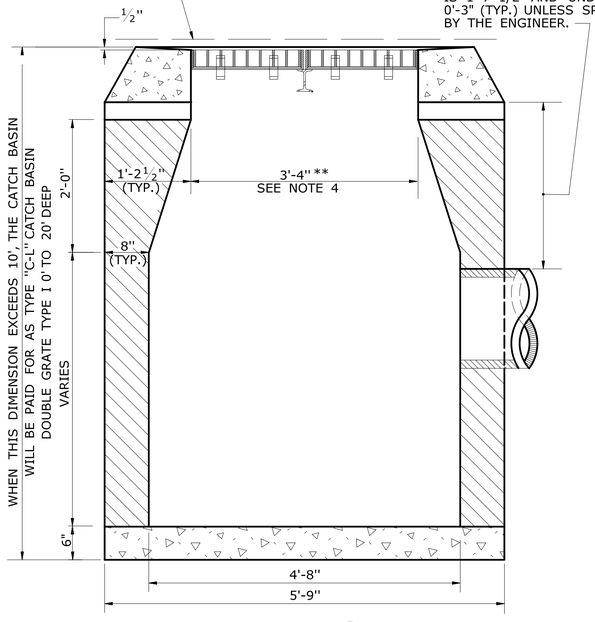

SECTION B

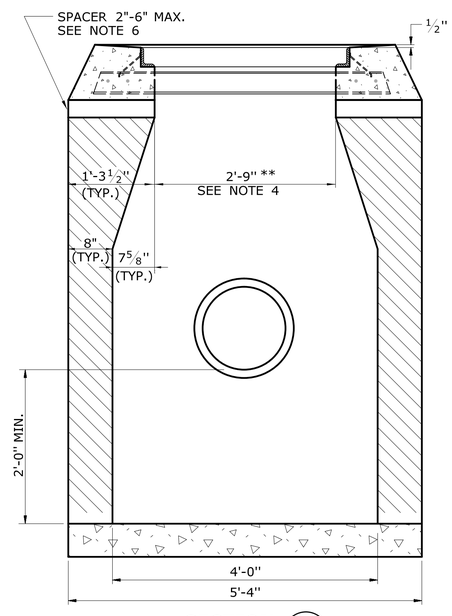

SECTION A

TYPE "C-L" CATCH BASIN DOUBLE GRATE - TYPE I

REV.	DATE	REVISION DESCRIPTION	SHEET NO.

THE INFORMATION, INCLUDING ESTIMATED QUANTITIES OF WORK, SHOWN ON THESE SHEETS IS BASED ON LIMITED INVESTIGATIONS BY THE STATE AND IS IN NO WAY WARRANTED TO INDICATE THE CONDITIONS OF ACTUAL QUANTITIES OF WORK WHICH WILL BE REQUIRED.

Plotted Date: 8/14/2019

DESIGNER/DRAFTER: RF
CHECKED BY: SN

STATE OF CONNECTICUT
DEPARTMENT OF TRANSPORTATION

Filename: ...\Plan\CTDOT_HIGHWAY_GD.dgn

SIGNATURE/BLOCK: OFFICE OF ENGINEERING
APPROVED BY: Matthew Vaul

PROJECT TITLE: REPLACEMENT OF BRIDGE 00681 - HUNTINGTON RD. (RTE.14) OVER THE MERRICK BROOK

TOWN: TOWN OF SCOTLAND

DRAWING TITLE: CATCH BASIN TYPES DOUBLE GRATE TYPE I

PROJECT NO. 0123-0066
DRAWING NO. DGS-02
SHEET NO. 4.03

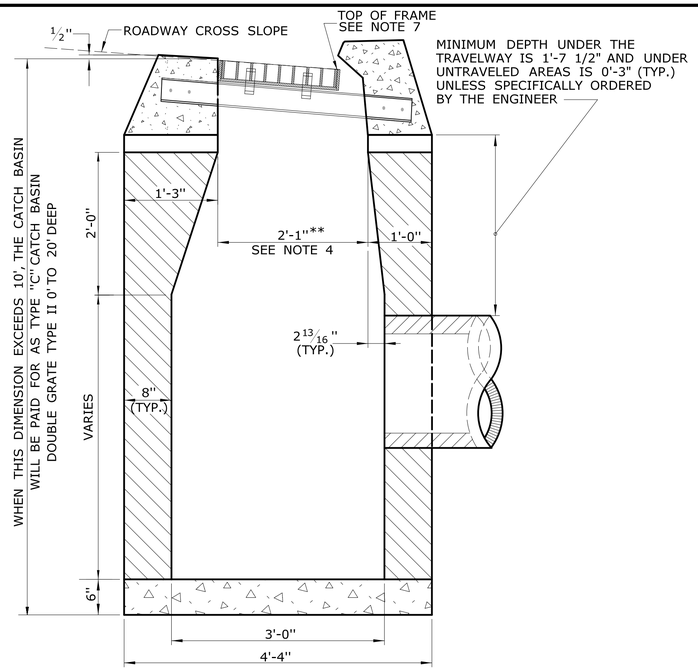

SECTION B

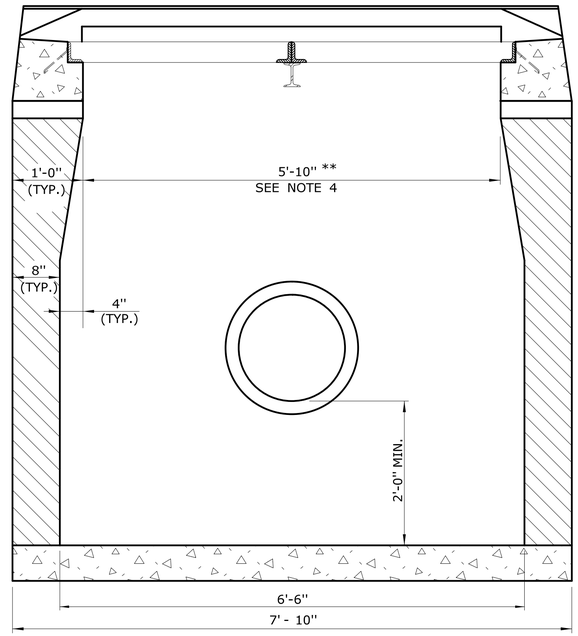

SECTION A

TYPE "C" CATCH BASIN DOUBLE GRATE - TYPE II

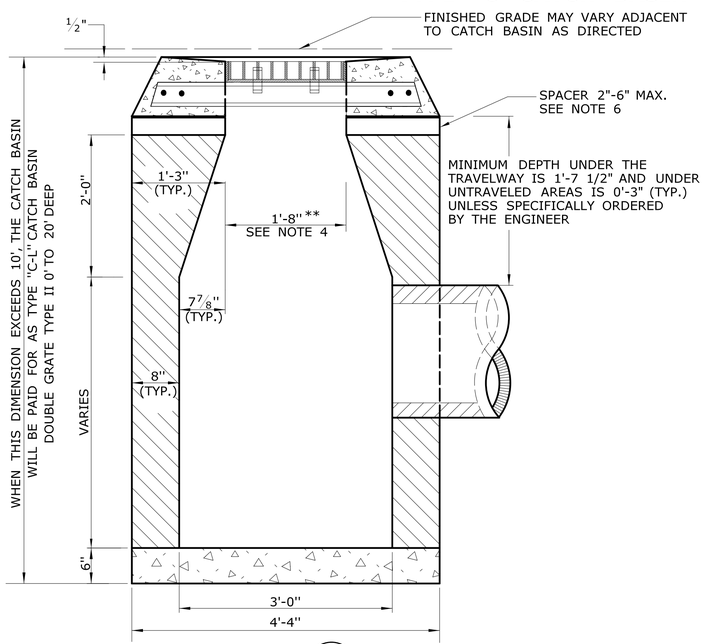

SECTION B

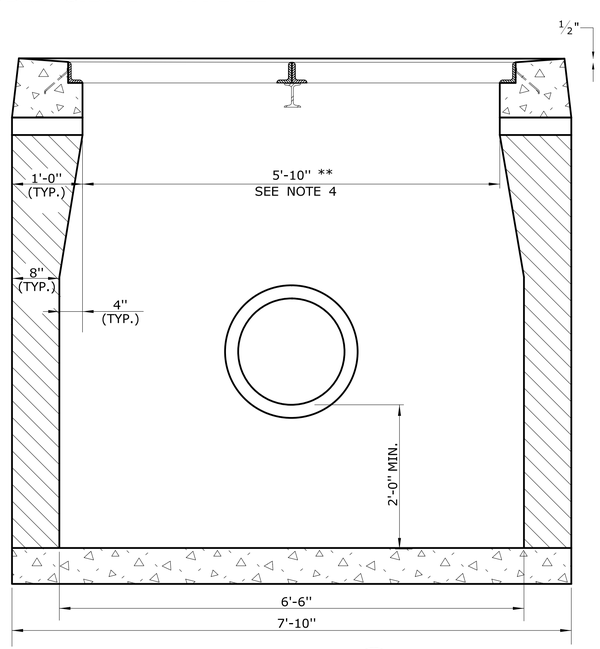

SECTION A

TYPE "C-L" CATCH BASIN DOUBLE GRATE - TYPE II

GENERAL NOTES:

1. FOR CATCH BASIN TOPS, SEE DRAWING NO. DGS-07.
2. ALL THE FACES OF THE STRUCTURE IN CONTACT WITH CONCRETE PAVEMENT SHALL BE COVERED WITH A LAYER OF TAR PAPER OR APPROVED EQUAL.
3. USE 6'-0" ON UPGRADE SIDE (SEE PLAN VIEW) OF CONTINUOUS GRADE AND 1'-0" ON DOWNGRADE SIDE OF CONTINUOUS GRADE AS DIRECTED BY THE ENGINEER.
4. IF MASONRY UNITS ARE REQUIRED, THE BASIN SHALL BE CONSTRUCTED IN CONFORMANCE WITH DIMENSIONS SHOWN. CORBELLING SHALL BE PERMITTED TO A MAXIMUM OF 3". NO PROJECTION SHALL EXTEND INSIDE THE LIMITS NOTED BY **.
5. WALL THICKNESS OF ALL CATCH BASINS OVER 10' DEEP SHALL BE INCREASED TO 12" THICK. INSIDE DIMENSION SHALL REMAIN THE SAME. 12" THICKNESS SHALL START AFTER THE FIRST 10'.
6. SPACERS CAN BE EITHER CONCRETE MASONRY UNIT OR PRECAST, WITH THE REQUIRED REINFORCING (RECOMMENDED BY THE MANUFACTURER) AS NEEDED TO PROVIDE THE PROPER GRADE SHOWN ON THE PLANS.
7. TOP OF FRAME ELEVATION SHALL BE MEASURED IN BETWEEN BOTH GRATES AT THE GUTTER.

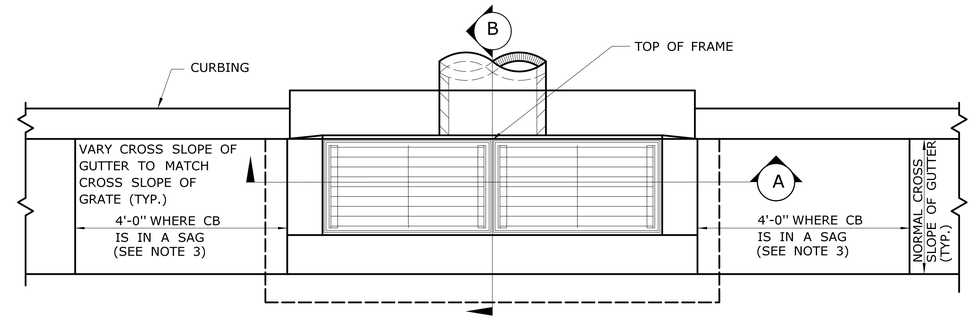

PLAN

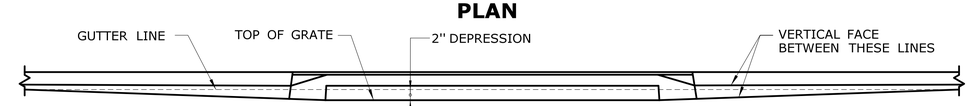

CATCH BASINS IN A LINE WITH 4" CONCRETE PARK CURBING OR 4" BITUMINOUS CONCRETE PARK CURBING

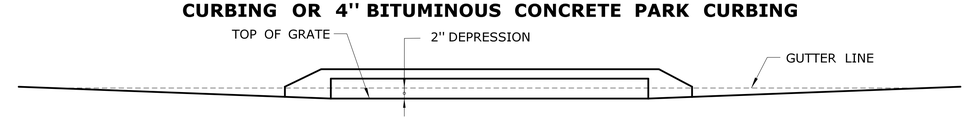

CATCH BASINS WHERE NO CURBING OF ANY TYPE EXISTS OR IS PROPOSED

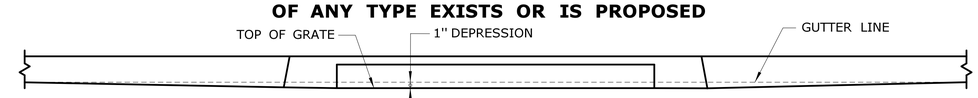

CATCH BASINS IN A LINE WITH 6" CONCRETE CURBING OR 6" STONE CURBING

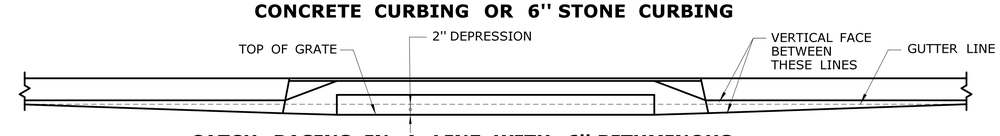

CATCH BASINS IN A LINE WITH 6" BITUMINOUS CONCRETE LIP CURBING (MACHINE FORMED)

DETAILS OF DEPRESSED GUTTER STRIP FOR TYPE "C" CATCH BASIN DOUBLE GRATE TYPE II

REV.	DATE	REVISION DESCRIPTION	SHEET NO.

THE INFORMATION, INCLUDING ESTIMATED QUANTITIES OF WORK, SHOWN ON THESE SHEETS IS BASED ON LIMITED INVESTIGATIONS BY THE STATE AND IS IN NO WAY WARRANTED TO INDICATE THE CONDITIONS OF ACTUAL QUANTITIES OF WORK WHICH WILL BE REQUIRED.

Plotted Date: 8/14/2019

DESIGNER/DRAFTER: RF
CHECKED BY: SN

STATE OF CONNECTICUT
DEPARTMENT OF TRANSPORTATION

Filename: ...\Plan\CTDOT_HIGHWAY_GD.dgn

SIGNATURE/BLOCK: OFFICE OF ENGINEERING
APPROVED BY: Matthew Wolf

PROJECT TITLE: REPLAVEMENT OF BRIDGE 00681 - HUNTINGTON RD. (RTE.14) OVER THE MERRICK BROOK

TOWN: TOWN OF SCOTLAND

DRAWING TITLE: CATCH BASIN TYPES DOUBLE GRATE TYPE II

PROJECT NO. 0123-0066
DRAWING NO. DGS-03
SHEET NO. 4.04

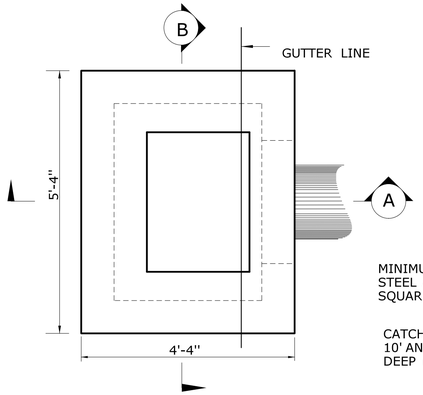

PLAN

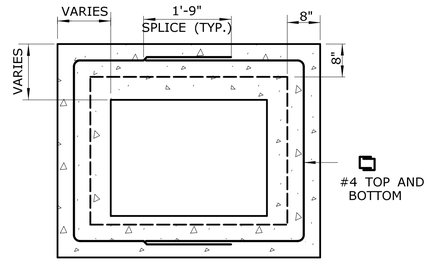

REDUCER SECTION (TYP.)

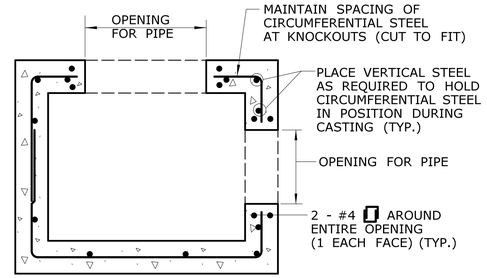

TYPICAL SECTION THROUGH RISER WITH OPENING

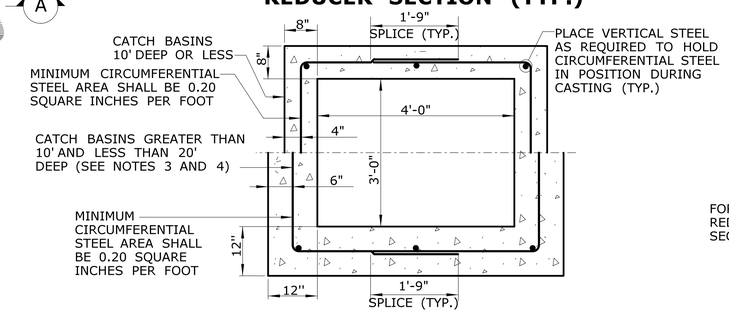

RISER SECTION (TYP.)

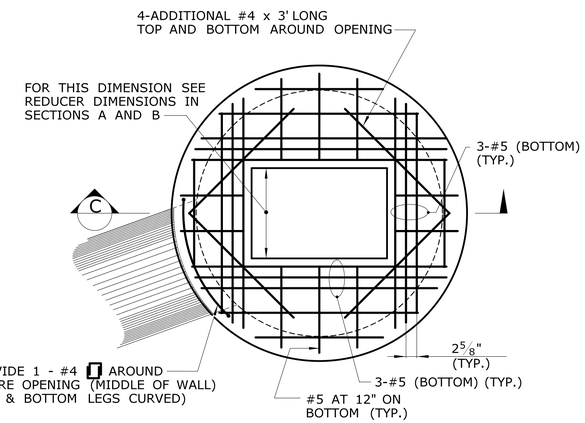

PLAN

(SEE NOTE 9)

GENERAL NOTES:

1. WELDED WIRE FABRIC WITH AN AREA EQUAL TO OR GREATER THAN THE REINFORCING SHOWN MAY BE SUBSTITUTED AS APPROVED BY THE ENGINEER.
2. ALL REINFORCEMENT SHALL HAVE A MINIMUM CLEAR COVER OF 2 INCHES, EXCEPT FOR BENEATH BOTTOM REINFORCEMENT IN TOP SLABS, WHERE THE MINIMUM MAY BE 1½ INCHES.
3. WALL THICKNESS OF ALL CATCH BASINS OVER 10 FEET DEEP SHALL BE INCREASED TO 12 INCHES. INSIDE DIMENSIONS SHALL REMAIN THE SAME. THE 12 INCH THICKNESS SHALL START AFTER THE FIRST 10 FEET.
4. BASES AND RISERS AT A DEPTH OF 20 FEET AND GREATER SHALL BE DESIGNED BY THE CONTRACTOR AND WORKING DRAWINGS SHALL BE SUBMITTED TO THE ENGINEER FOR REVIEW.
5. RISERS MAY BE PREFABRICATED WITH PIPE OPENINGS IN ALL FOUR WALLS. ADEQUATE REINFORCING AROUND PIPE OPENINGS SHALL BE PROVIDED. RISERS USED WHERE A PIPE OPENING IS TO REMAIN IN PLACE MUST BE FORMED UP WITH BRICK AS DIRECTED BY THE ENGINEER.
6. RISERS SHALL NEVER HAVE CORNER PIPE ENTRIES. ROUND STRUCTURES SHALL BE USED WHEN PIPES CANNOT ALIGN WITH A RECTANGULAR STRUCTURE KNOCKOUT.
7. SHRINKAGE AND TEMPERATURE REINFORCEMENT SHALL BE PROVIDED IN THE TOPS OF SLABS. THE TOTAL AREA OF REINFORCEMENT PROVIDED SHALL BE AT LEAST 0.125 SQUARE INCHES PER FOOT IN EACH DIRECTION. THE MAXIMUM SPACING OF THIS REINFORCEMENT SHALL NOT EXCEED 18 INCHES.
8. THE DETAILS SHOWN IN THE PLAN VIEW FOR PRECAST CONCRETE ROUND STRUCTURES SHALL ALSO BE USED FOR CONVERTING MANHOLES TO CATCH BASINS.
9. FOR CATCH BASIN TOPS, SEE DRAWING NO. DGS-07 FOR RECTANGULAR OPENING OR DRAWING NOS. DGS-10a,10b OR 10c FOR CIRCULAR OPENING.

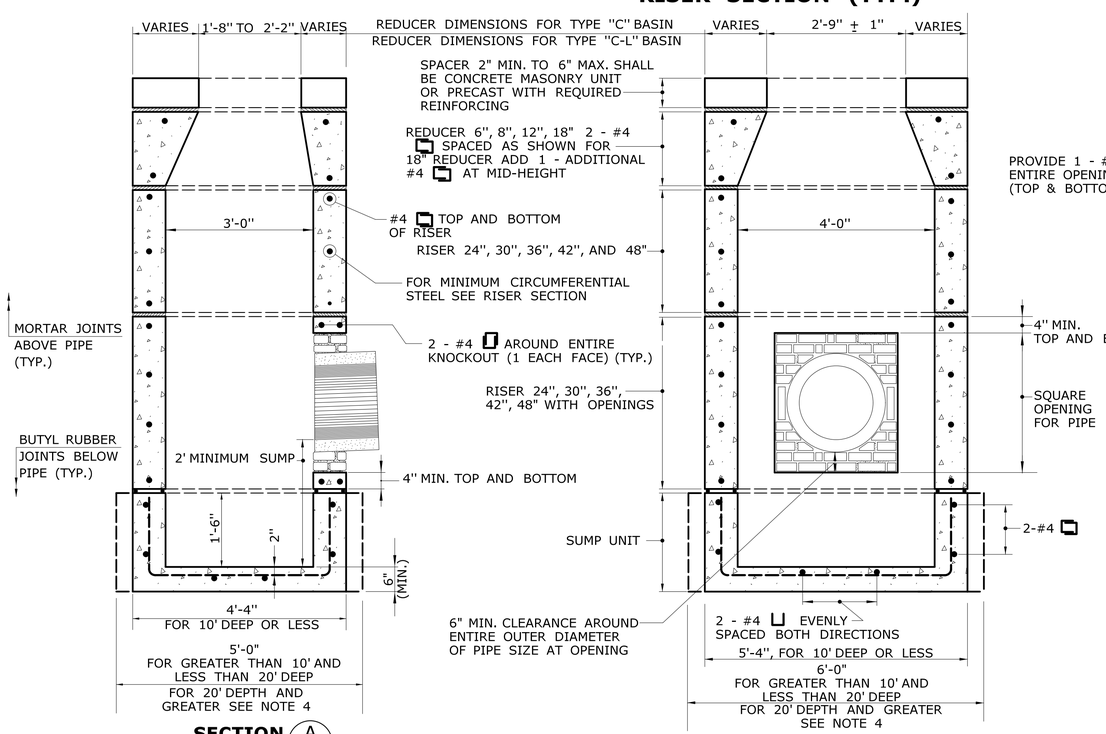

SECTION A

SECTION B

PRECAST CONCRETE TYPE "C" AND "C-L" CATCH BASIN

(UNDER 10' DEEP SHOWN)

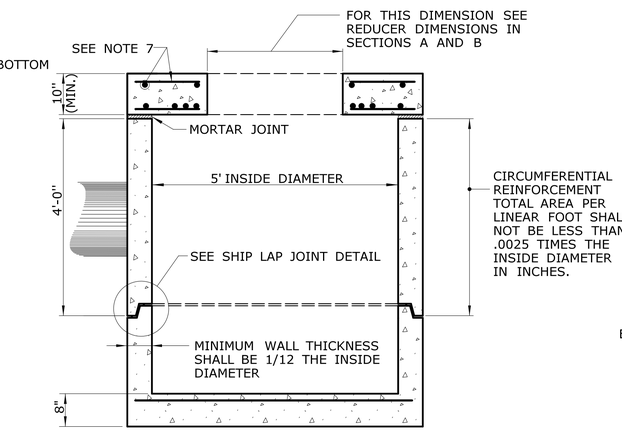

SECTION C

PRECAST CONCRETE TYPE "C" AND "C-L" ROUND STRUCTURE

(SEE NOTE 6)

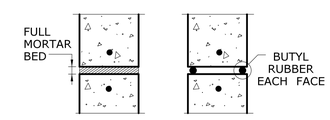

MORTAR JOINT DETAIL

BUTYL RUBBER JOINT DETAIL

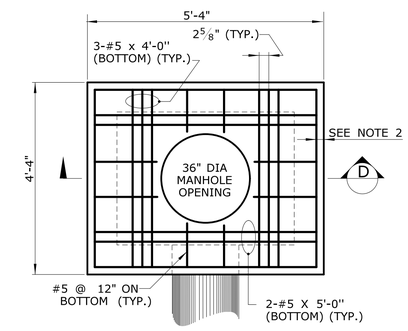

PLAN

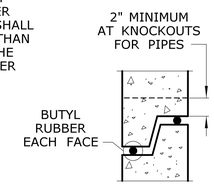

SHIP LAP JOINT DETAIL

(FOR USE WITH ROUND STRUCTURES ONLY)

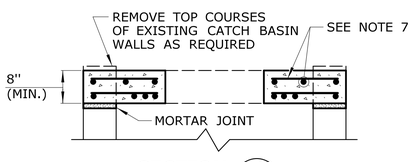

SECTION D

TOP SLAB TO CONVERT CATCH BASIN TO MANHOLE

REV.	DATE	REVISION DESCRIPTION	SHEET NO.
1.	5/19	REVISED MANHOLE DIA IN PLAN VIEW	

THE INFORMATION, INCLUDING ESTIMATED QUANTITIES OF WORK, SHOWN ON THESE SHEETS IS BASED ON LIMITED INVESTIGATIONS BY THE STATE AND IS IN NO WAY WARRANTED TO INDICATE THE CONDITIONS OF ACTUAL QUANTITIES OF WORK WHICH WILL BE REQUIRED.

Plotted Date: 8/14/2019

DESIGNER/DRAFTER: RF

CHECKED BY: SN

STATE OF CONNECTICUT
DEPARTMENT OF TRANSPORTATION

Filename: ...\Plan\CTDOT_HIGHWAY_GD.dgn

SIGNATURE/BLOCK: OFFICE OF ENGINEERING

APPROVED BY: Matthew Vail

PROJECT TITLE: REPLACEMENT OF BRIDGE 00681 - HUNTINGTON RD. (RTE.14) OVER THE MERRICK BROOK

TOWN: TOWN OF SCOTLAND

DRAWING TITLE: PRECAST CATCH BASIN & ROUND STRUCTURE

PROJECT NO. 0123-0066

DRAWING NO. DGS-04

SHEET NO. 4.05

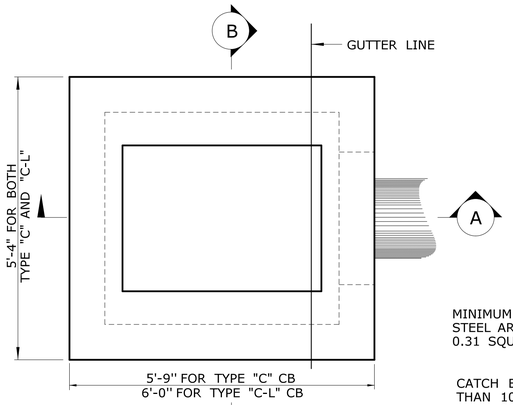

PLAN

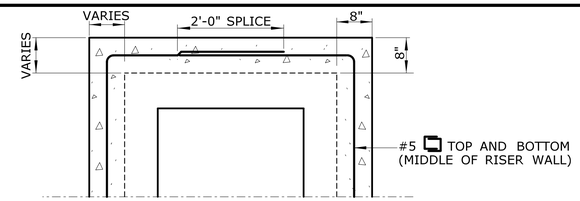

HALF REDUCER SECTION (TYP.)

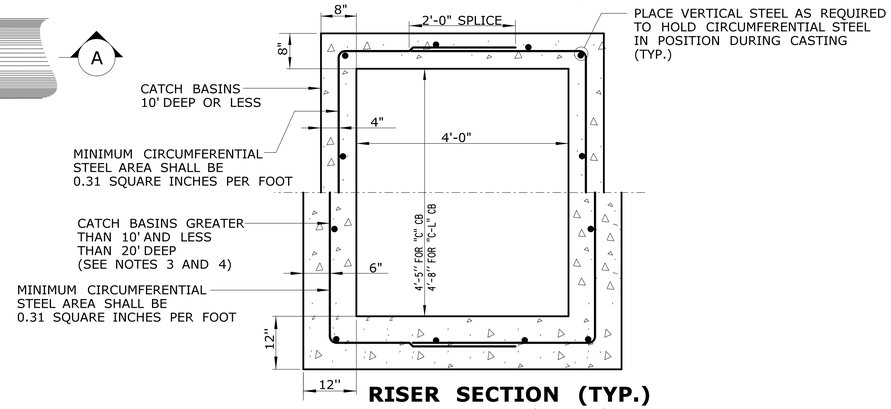

RISER SECTION (TYP.)

GENERAL NOTES:

1. WELDED WIRE FABRIC WITH AN AREA EQUAL TO OR GREATER THAN THE REINFORCING SHOWN MAY BE SUBSTITUTED AS APPROVED BY THE ENGINEER.
2. ALL REINFORCEMENT SHALL HAVE A MINIMUM CLEAR COVER OF 2 INCHES, EXCEPT FOR BENEATH BOTTOM REINFORCEMENT IN TOP SLABS, WHERE THE MINIMUM MAY BE $1\frac{1}{2}$ INCHES.
3. WALL THICKNESS OF ALL CATCH BASINS OVER 10 FEET DEEP SHALL BE INCREASED TO 12 INCHES. INSIDE DIMENSIONS SHALL REMAIN THE SAME. THE 12 INCH THICKNESS SHALL START AFTER THE FIRST 10 FEET.
4. BASES AND RISERS AT A DEPTH OF 20 FEET AND GREATER SHALL BE DESIGNED BY THE CONTRACTOR AND WORKING DRAWINGS SHALL BE SUBMITTED TO THE ENGINEER FOR REVIEW.
5. RISERS MAY BE PREFABRICATED WITH PIPE OPENINGS IN ALL FOUR WALLS. ADEQUATE REINFORCING AROUND PIPE OPENINGS SHALL BE PROVIDED. RISERS USED WHERE A PIPE OPENING IS TO REMAIN IN PLACE MUST BE FORMED UP WITH BRICK AS DIRECTED BY THE ENGINEER.
6. RISERS SHALL NEVER HAVE CORNER PIPE ENTRIES. ROUND STRUCTURES SHALL BE USED WHEN PIPES CANNOT ALIGN WITH A RECTANGULAR STRUCTURE KNOCK OUT.
7. FOR CATCH BASIN TOPS, SEE DRAWING NO. DGS-07.

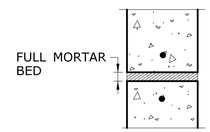

MORTAR JOINT

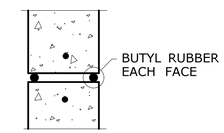

BUTYL RUBBER JOINT

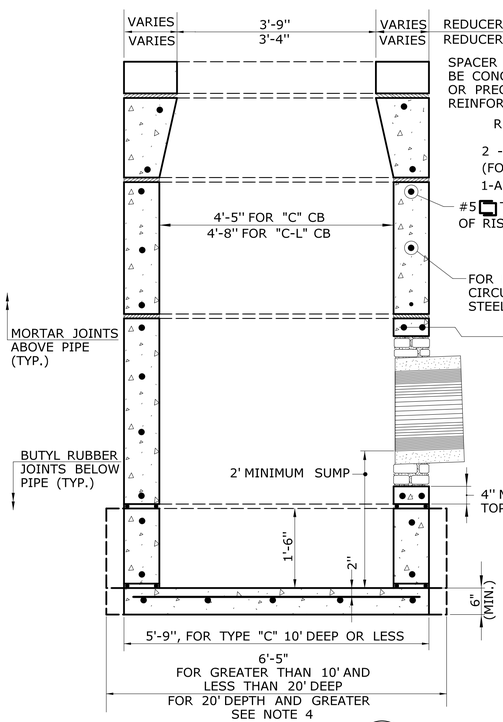

SECTION A

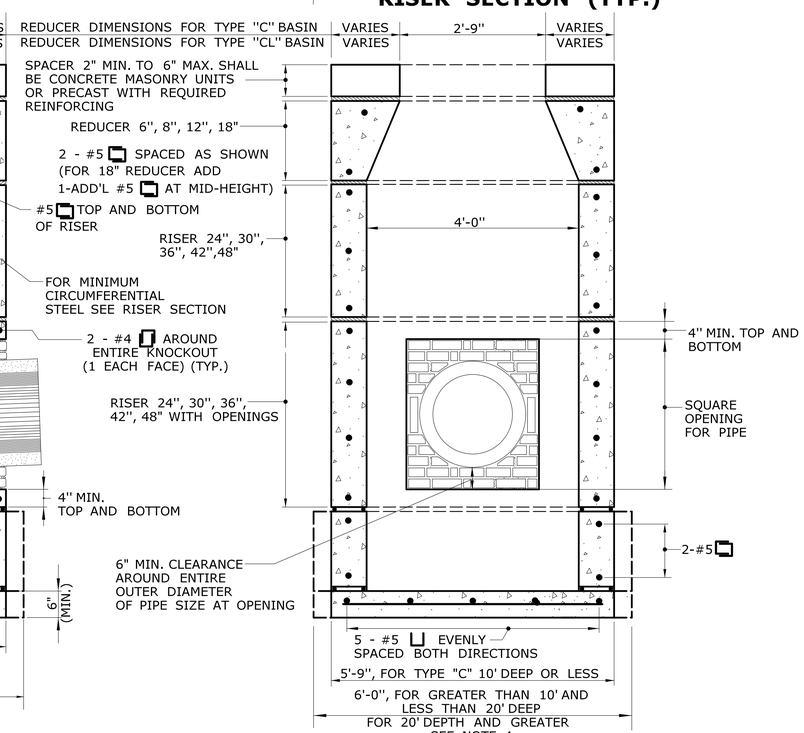

SECTION B

PRECAST CONCRETE TYPE "C" AND "C-L" DOUBLE GRATE TYPE I CATCH BASIN
(UNDER 10' DEEP SHOWN)

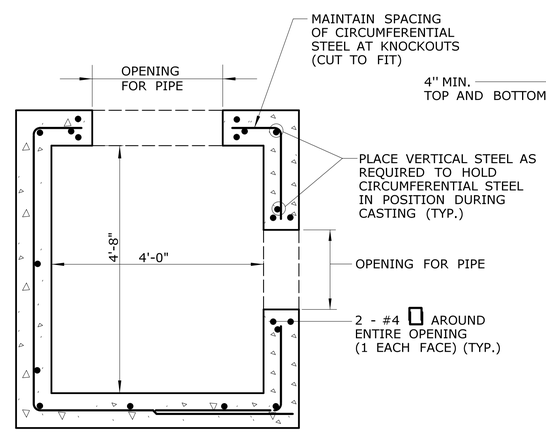

TYPICAL SECTION THRU SINGLE RISER WITH OPENING

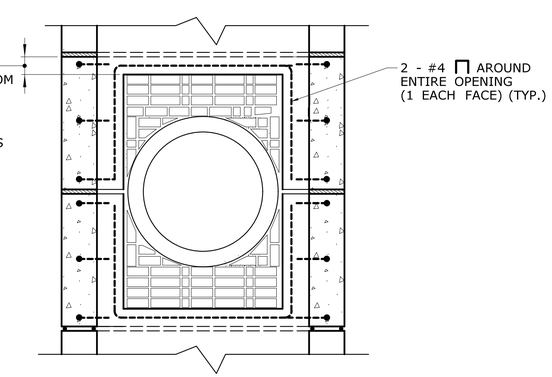

DOUBLE RISER OPENING (TYP.)
PIPES GREATER THAN 24" OUTSIDE DIAMETER

REV.	DATE	REVISION DESCRIPTION	SHEET NO.

THE INFORMATION, INCLUDING ESTIMATED QUANTITIES OF WORK, SHOWN ON THESE SHEETS IS BASED ON LIMITED INVESTIGATIONS BY THE STATE AND IS IN NO WAY WARRANTED TO INDICATE THE CONDITIONS OF ACTUAL QUANTITIES OF WORK WHICH WILL BE REQUIRED.

Plotted Date: 8/14/2019

DESIGNER/DRAFTER: RF
CHECKED BY: SN

STATE OF CONNECTICUT
DEPARTMENT OF TRANSPORTATION

Filename: ...\Plan\CTDOT_HIGHWAY_GD.dgn

SIGNATURE/BLOCK:
OFFICE OF ENGINEERING
APPROVED BY:

PROJECT TITLE:
REPLACEMENT OF BRIDGE
00681 - HUNTINGTON RD. (RTE.14)
OVER THE MERRICK BROOK

TOWN:
TOWN OF SCOTLAND

DRAWING TITLE:
PRECAST CATCH BASIN
TYPES DOUBLE GRATE I

PROJECT NO. 0123-0066
DRAWING NO. DGS-05
SHEET NO. 4.06

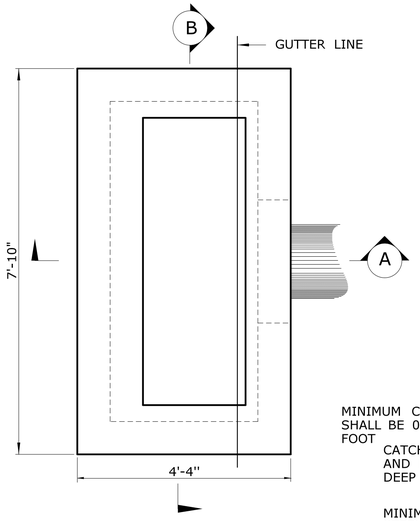

PLAN

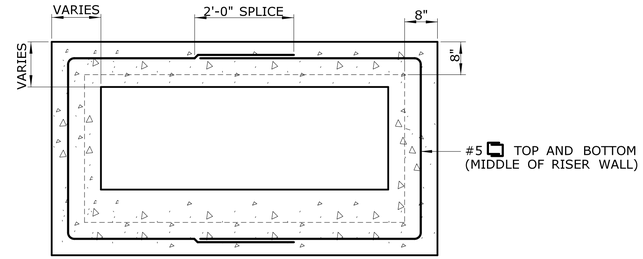

REDUCER SECTION (TYP.)

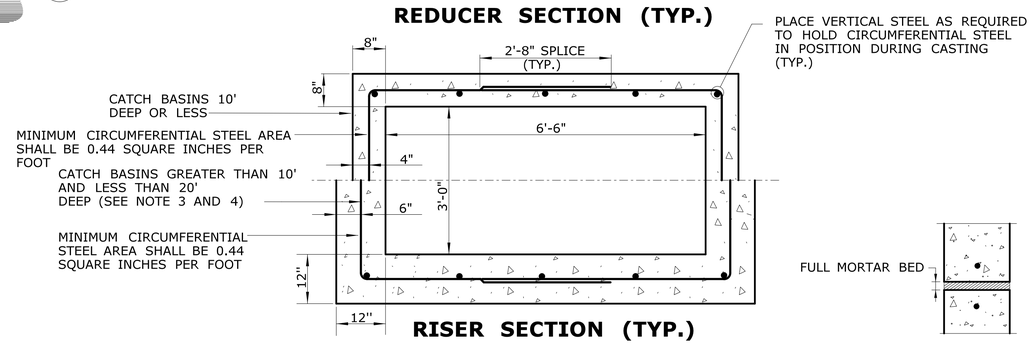

RISER SECTION (TYP.)

MORTAR JOINT

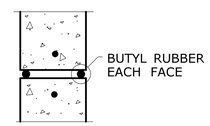

BUTYL RUBBER JOINT

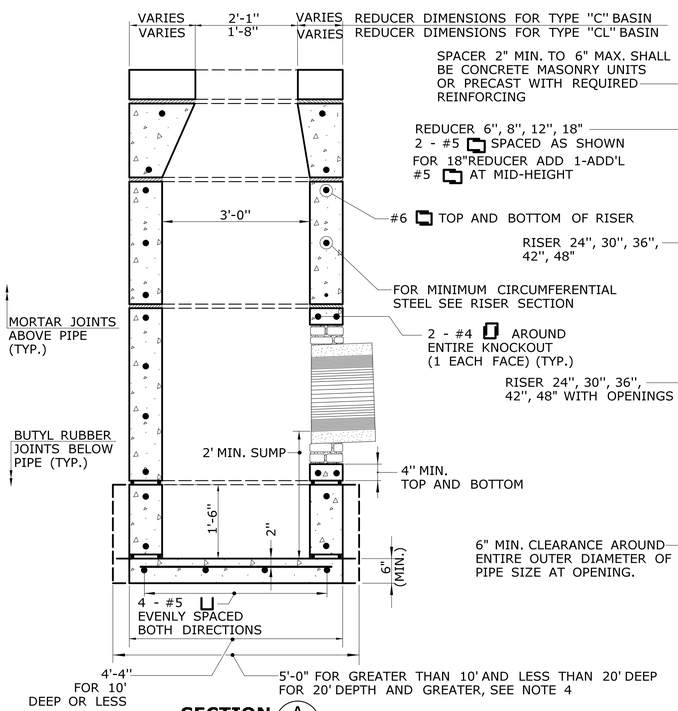

SECTION A

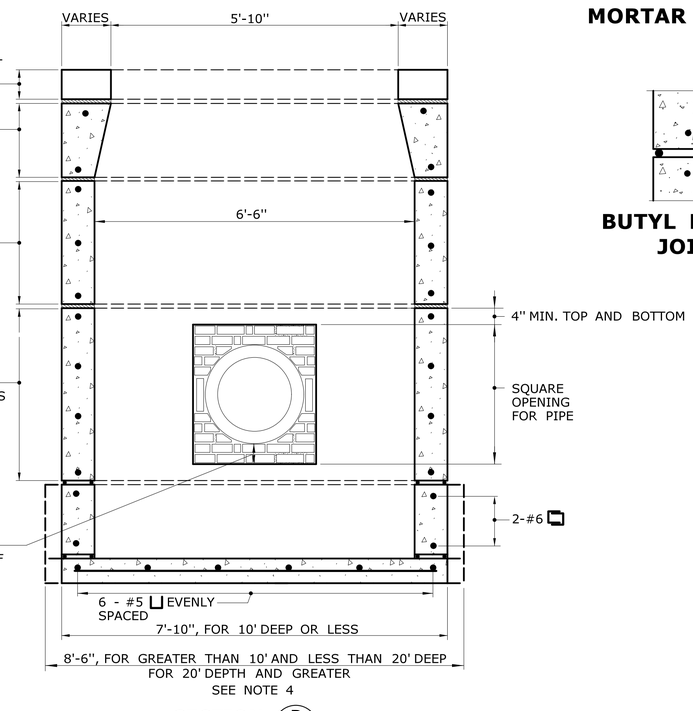

SECTION B

PRECAST CONCRETE TYPE "C" AND "C-L" DOUBLE GRATE TYPE II CATCH BASIN
(UNDER 10' DEEP SHOWN)

GENERAL NOTES:

1. WELDED WIRE FABRIC WITH AN AREA EQUAL TO OR GREATER THAN THE REINFORCING SHOWN MAY BE SUBSTITUTED AS APPROVED BY THE ENGINEER.
2. ALL REINFORCEMENT SHALL HAVE A MINIMUM CLEAR COVER OF 2 INCHES EXCEPT FOR BENEATH BOTTOM REINFORCEMENT IN TOP SLABS, WHERE THE MINIMUM MAY BE $1\frac{1}{2}$ INCHES.
3. WALL THICKNESS OF ALL CATCH BASINS OVER 10 FEET DEEP SHALL BE INCREASED TO 12 INCHES. INSIDE DIMENSIONS SHALL REMAIN THE SAME. THE 12 INCH THICKNESS SHALL START AFTER THE FIRST 10 FEET.
4. BASES AND RISERS AT A DEPTH OF 20 FEET AND GREATER SHALL BE DESIGNED BY THE CONTRACTOR AND WORKING DRAWINGS SHALL BE SUBMITTED TO THE ENGINEER FOR REVIEW.
5. RISERS MAY BE PREFABRICATED WITH PIPE OPENINGS IN ALL FOUR WALLS. ADEQUATE REINFORCING AROUND PIPE OPENINGS SHALL BE PROVIDED. RISERS USED WHERE A PIPE OPENING IS TO REMAIN IN PLACE MUST BE FORMED UP WITH BRICK AS DIRECTED BY THE ENGINEER.
6. RISERS SHALL NEVER HAVE CORNER PIPE ENTRIES. ROUND STRUCTURES SHALL BE USED WHEN PIPES CANNOT ALIGN WITH A RECTANGULAR STRUCTURE KNOCKOUT.
7. FOR CATCH BASIN TOPS, SEE DRAWING NO. DGS-07.

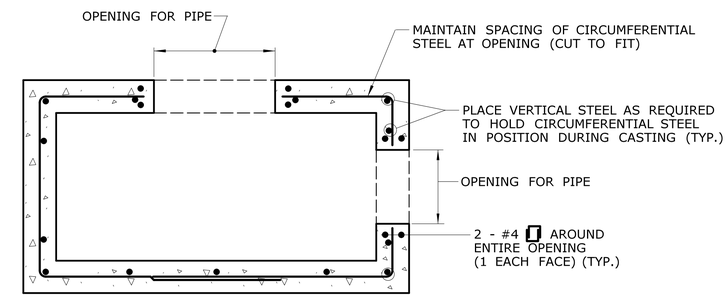

TYPICAL SECTION THROUGH SINGLE RISER WITH OPENINGS

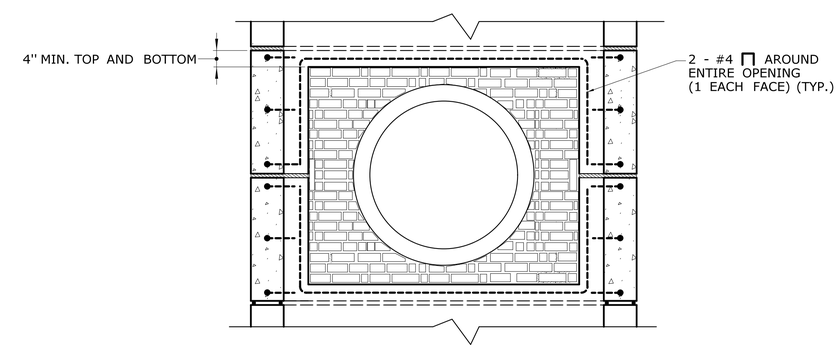

DOUBLE RISER OPENING (TYP.)
PIPES GREATER THAN 24" OUTSIDE DIAMETER

REV.	DATE	REVISION DESCRIPTION	SHEET NO.

THE INFORMATION, INCLUDING ESTIMATED QUANTITIES OF WORK, SHOWN ON THESE SHEETS IS BASED ON LIMITED INVESTIGATIONS BY THE STATE AND IS IN NO WAY WARRANTED TO INDICATE THE CONDITIONS OF ACTUAL QUANTITIES OF WORK WHICH WILL BE REQUIRED.

Plotted Date: 8/14/2019

DESIGNER/DRAFTER: RF
CHECKED BY: SN

STATE OF CONNECTICUT
DEPARTMENT OF TRANSPORTATION

Filename: ...\Plan\CTDOT_HIGHWAY_GD.dgn

SIGNATURE/BLOCK:
OFFICE OF ENGINEERING
APPROVED BY:
Matthew Vail

PROJECT TITLE:
REPLACEMENT OF BRIDGE
00681 - HUNTINGTON RD. (RTE.14)
OVER THE MERRICK BROOK

TOWN:
TOWN OF SCOTLAND

DRAWING TITLE:
PRECAST CATCH BASIN
TYPES DOUBLE GRATE II

PROJECT NO. 0123-0066
DRAWING NO. DGS-06
SHEET NO. 4.07

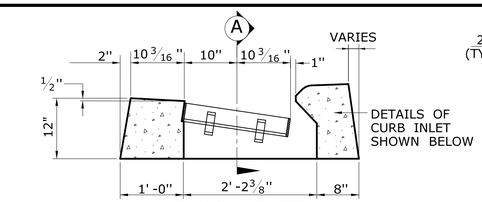

CROSS SECTION

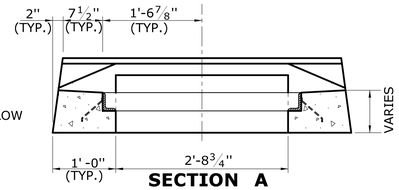

SECTION A

TYPE "C" CATCH BASIN TOP

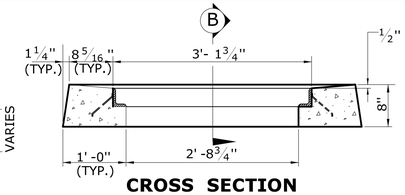

CROSS SECTION

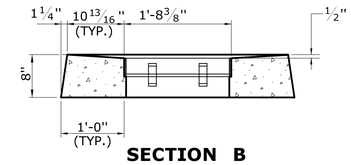

SECTION B

TYPE "C-L" CATCH BASIN TOP

GENERAL NOTES:

1. FOR DETAILS OF FRAMES AND GRATES, SEE DRAWING NO. DGS-08.
2. ALL BARS SHALL HAVE A MINIMUM 2" COVER.

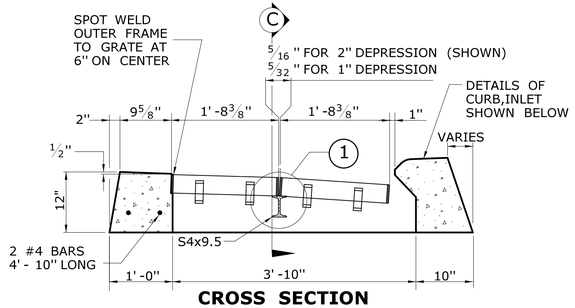

CROSS SECTION

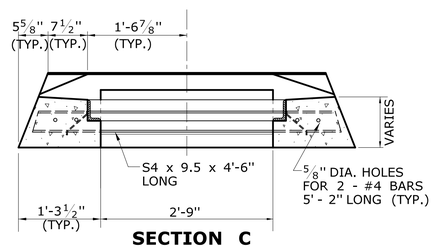

SECTION C

TYPE "C" CATCH BASIN DOUBLE GRATE - TYPE I TOP

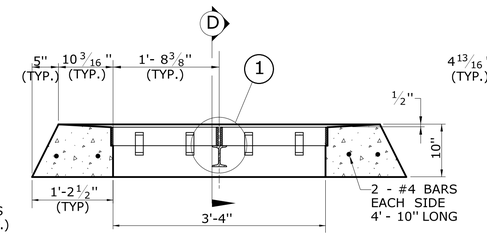

CROSS SECTION

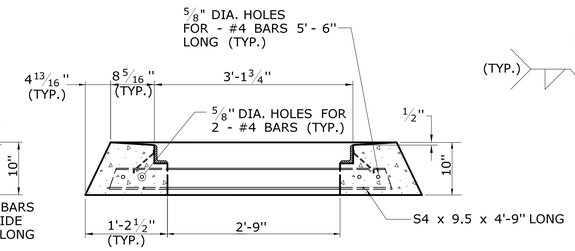

SECTION D

TYPE "C-L" CATCH BASIN DOUBLE GRATE - TYPE I TOP

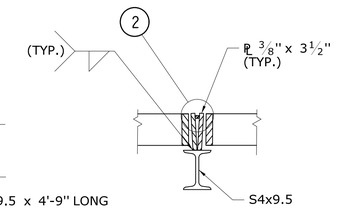

DETAIL "1"

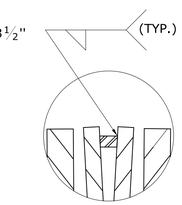

DETAIL "2"

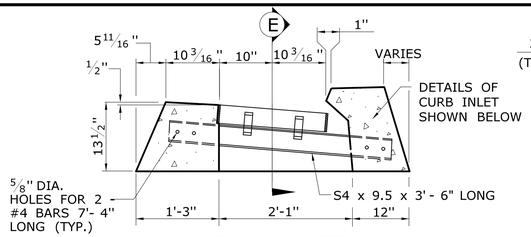

CROSS SECTION

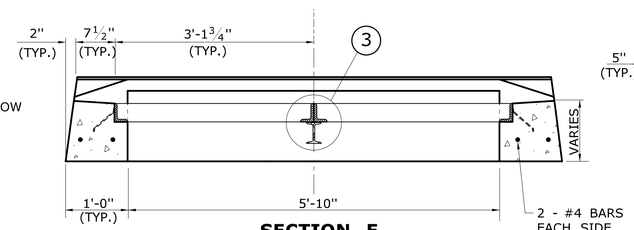

SECTION E

TYPE "C" CATCH BASIN DOUBLE GRATE - TYPE II TOP

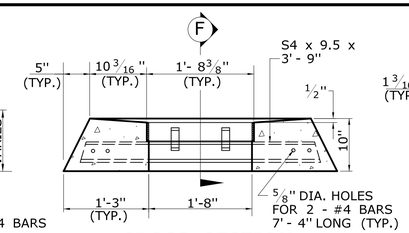

CROSS SECTION

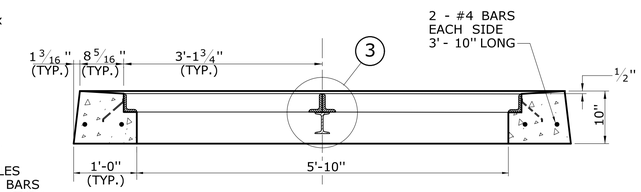

SECTION F

TYPE "C-L" CATCH BASIN DOUBLE GRATE - TYPE II TOP

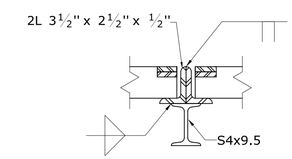

DETAIL "3"

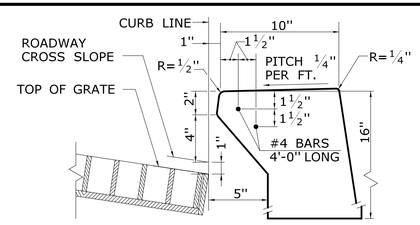

INLET WITH 6" CONCRETE OR STONE CURBING FOR TYPE "C" CB

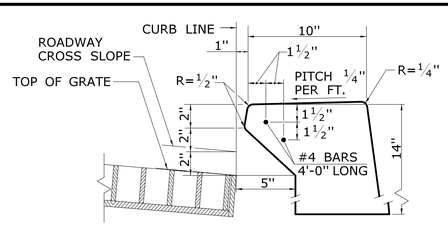

INLET WITH NO CURBING (PLAIN TYPE) FOR TYPE "C" CB

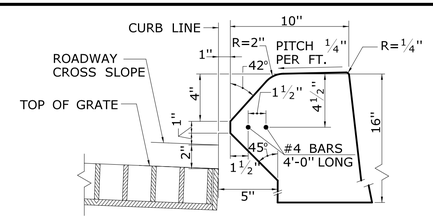

INLET WITH 6" BITUMINOUS CONCRETE LIP CURBING FOR TYPE "C" CB

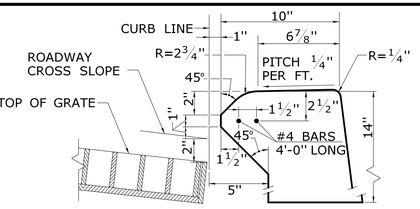

INLET WITH 4" CONCRETE PARK CURBING FOR TYPE "C" CB

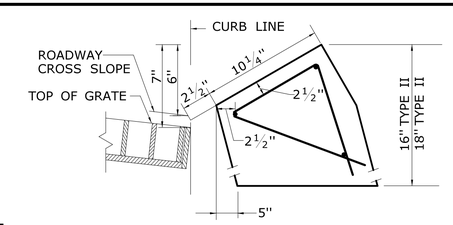

INLET WITH GRANITE SLOPE CURB FOR TYPE "C" CB

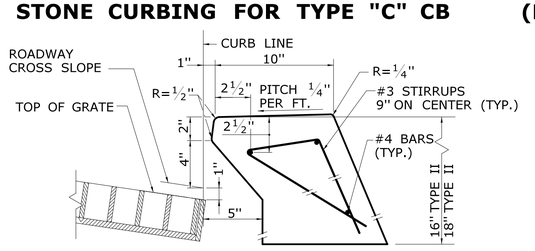

INLET WITH 6" CONCRETE OR STONE CURBING FOR TYPE "C" CB DOUBLE GRATE TYPE I & II

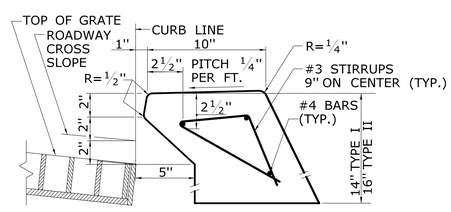

INLET WITH NO CURBING (PLAIN TYPE) FOR TYPE "C" CB DOUBLE GRATE TYPE I & II

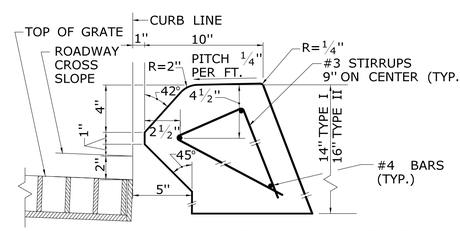

INLET WITH 6" BITUMINOUS CONCRETE LIP CURBING FOR TYPE "C" CB DOUBLE GRATE TYPE I & II

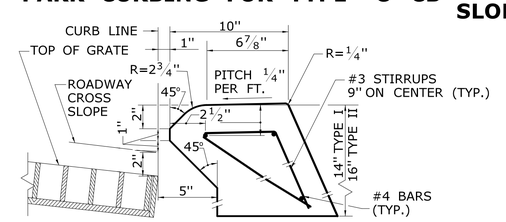

INLET WITH 4" CONCRETE PARK CURBING FOR TYPE "C" CB DOUBLE GRATE TYPE I & II

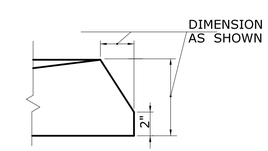

ALTERNATE CONSTRUCTION OF TYPE II TOP

REV.	DATE	REVISION DESCRIPTION	SHEET NO.

THE INFORMATION, INCLUDING ESTIMATED QUANTITIES OF WORK, SHOWN ON THESE SHEETS IS BASED ON LIMITED INVESTIGATIONS BY THE STATE AND IS IN NO WAY WARRANTED TO INDICATE THE CONDITIONS OF ACTUAL QUANTITIES OF WORK WHICH WILL BE REQUIRED.

Plotted Date: 8/14/2019

DESIGNER/DRAFTER: RF

CHECKED BY: SN

STATE OF CONNECTICUT
DEPARTMENT OF TRANSPORTATION

Filename: ...\Plan\CTDOT_HIGHWAY_GD.dgn

SIGNATURE/BLOCK: OFFICE OF ENGINEERING

APPROVED BY: Matthew Vail

PROJECT TITLE: REPLACEMENT OF BRIDGE 00681 - HUNTINGTON RD. (RTE.14) OVER THE MERRICK BROOK

TOWN: TOWN OF SCOTLAND

DRAWING TITLE: CATCH BASIN TOPS TYPE "C" & "C-L"

PROJECT NO. 0123-0066

DRAWING NO. DGS-07

SHEET NO. 4.08

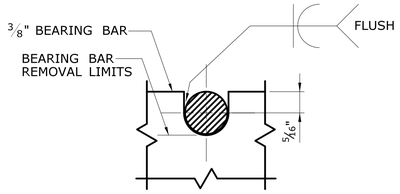

NOTE:
5/8" DIA. ROUND BAR SHALL CONTACT BEARING BAR AT BOTTOM AND BE FLUSH AT TOP.

ROUND BAR ATTACHMENT
CATCH BASIN GRATE TYPE A

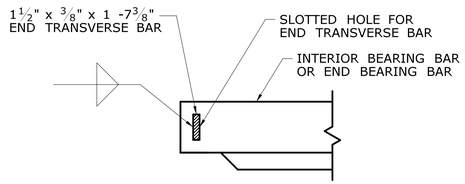

END TRANSVERSE BAR ATTACHMENT
CATCH BASIN GRATE TYPE A AND B

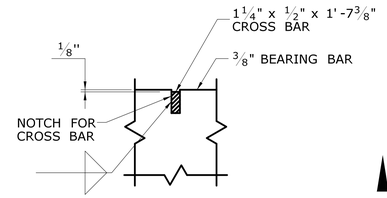

CROSS BAR ATTACHMENT
CATCH BASIN GRATE TYPE B

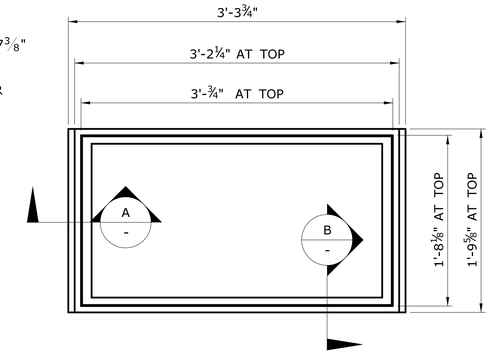

PLAN

GENERAL NOTES:

1. STEEL OR CAST IRON SHALL BE USED FOR FRAMES. STEEL SHALL BE USED FOR TYPE "A" AND "B" GRATES.
2. TYPE "A" GRATES SHALL BE USED ON ALL ROADWAYS WHERE BICYCLE TRAFFIC IS ALLOWED OR ON HEAVY DUTY LOCK DOWN TOPS AS DIRECTED BY THE ENGINEER.
3. TYPE "B" GRATES SHALL BE USED ON ALL LIMITED ACCESS HIGHWAYS, RAMPS AND WHERE BICYCLE TRAFFIC IS NOT ALLOWED OR AS DIRECTED BY THE ENGINEER.
4. DO NOT GALVANIZE CAST IRON FRAMES.
5. DIMENSIONAL TOLERANCES SHALL BE ± 1/16 INCH.
6. ALL STEEL BARS SHALL BE WELDED AT ALL INTERSECTIONS.

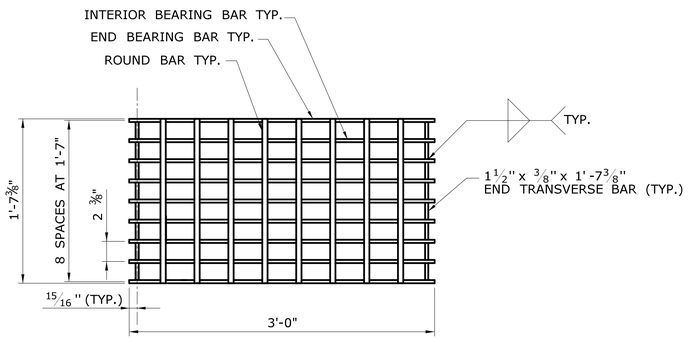

PLAN

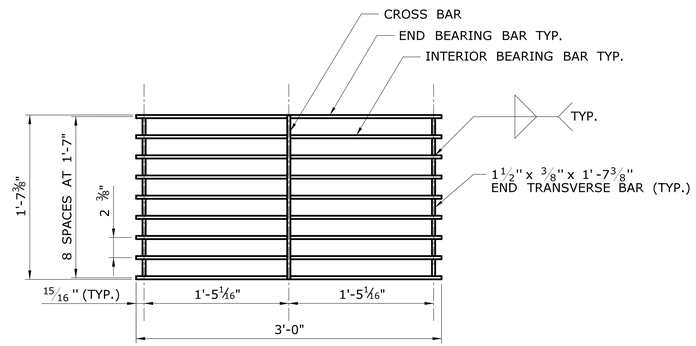

PLAN

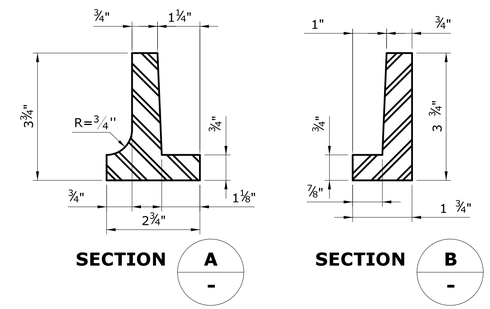

CAST IRON FRAME ALTERNATE

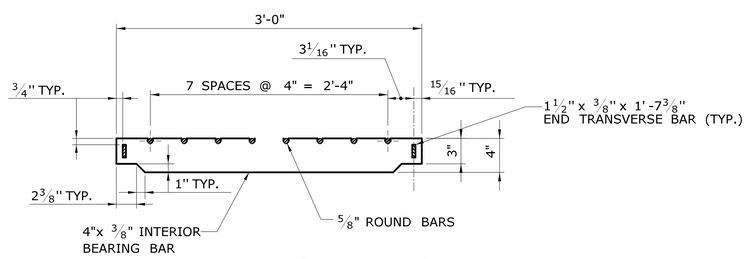

ELEVATION- INTERIOR BEARING BAR

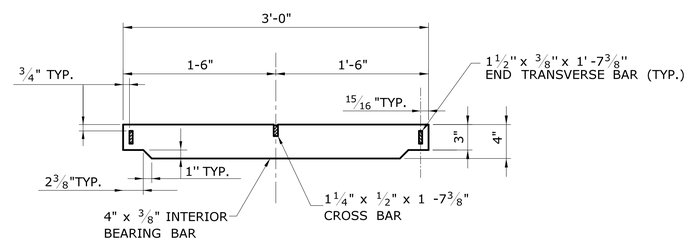

ELEVATION- INTERIOR BEARING BAR

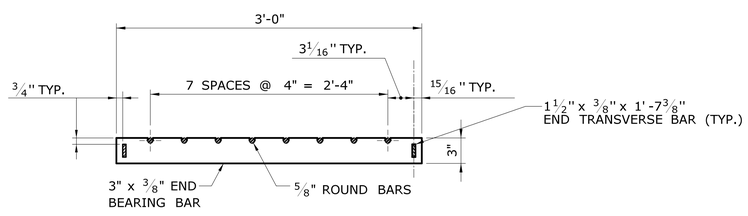

ELEVATION- END BEARING BAR
CATCH BASIN GRATE TYPE A

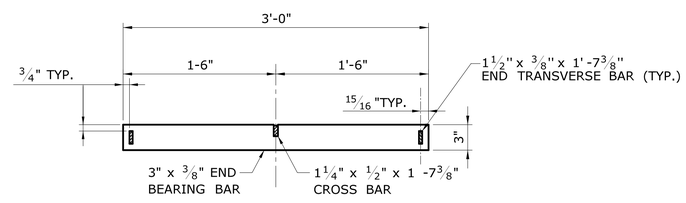

ELEVATION- END BEARING BAR
CATCH BASIN GRATE TYPE B

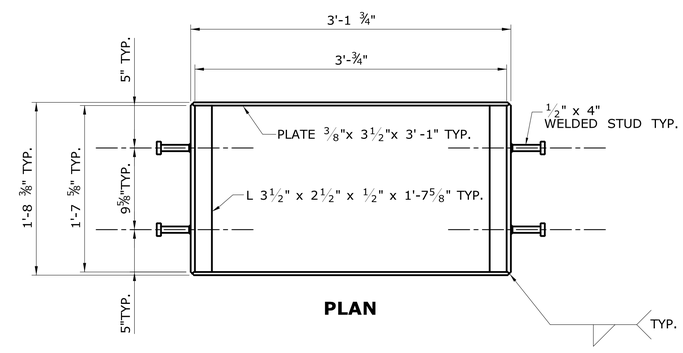

PLAN

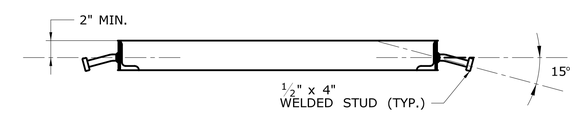

WELDED STUD ANCHOR DETAILS
STEEL FRAME

REV.	DATE	REVISION DESCRIPTION	SHEET NO.

THE INFORMATION, INCLUDING ESTIMATED QUANTITIES OF WORK, SHOWN ON THESE SHEETS IS BASED ON LIMITED INVESTIGATIONS BY THE STATE AND IS IN NO WAY WARRANTED TO INDICATE THE CONDITIONS OF ACTUAL QUANTITIES OF WORK WHICH WILL BE REQUIRED.

Plotted Date: 8/14/2019

DESIGNER/DRAFTER: RF
CHECKED BY: SN

STATE OF CONNECTICUT
DEPARTMENT OF TRANSPORTATION

Filename: ...\Plan\CTDOT_HIGHWAY_GD.dgn

SIGNATURE/ BLOCK:
OFFICE OF ENGINEERING
APPROVED BY:

PROJECT TITLE:
REPLACEMENT OF BRIDGE 00681 - HUNTINGTON RD. (RTE.14) OVER THE MERRICK BROOK

TOWN: TOWN OF SCOTLAND

DRAWING TITLE: CATCH BASIN FRAMES AND GRATES

PROJECT NO. 0123-0066
DRAWING NO. DGS-08
SHEET NO. 4.09

GENERAL NOTES:

1. ALL DIMENSIONS ARE SUBJECT TO MANUFACTURING TOLERANCES.

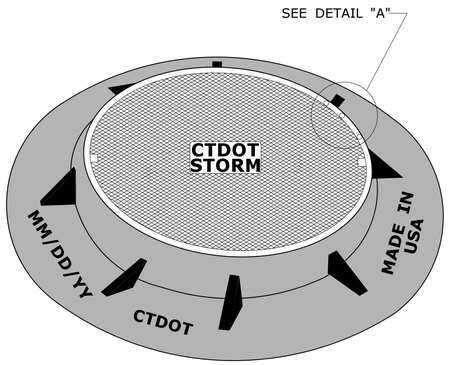

MANHOLE FRAME AND COVER

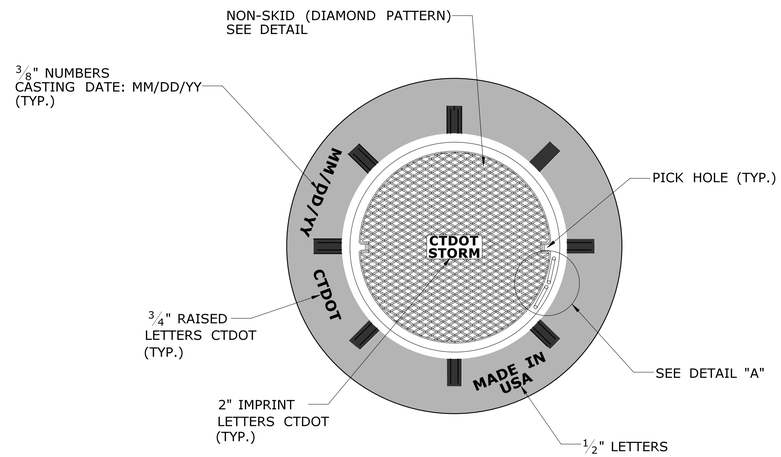

PLAN

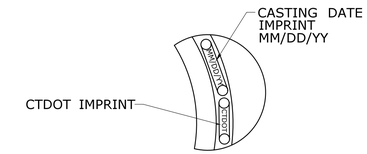

DETAIL "A"

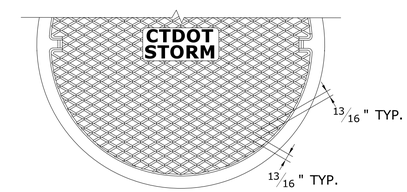

DIAMOND PATTERN PLAN

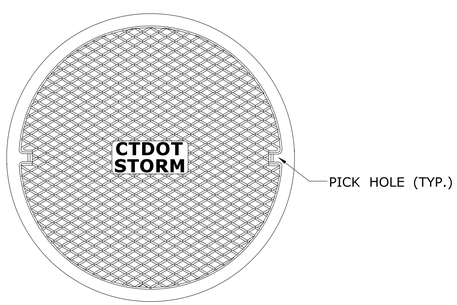

MANHOLE COVER PLAN

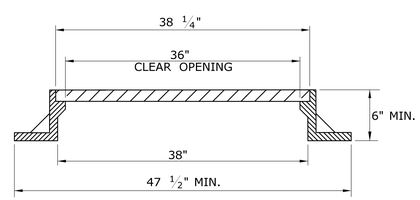

MANHOLE FRAME AND COVER

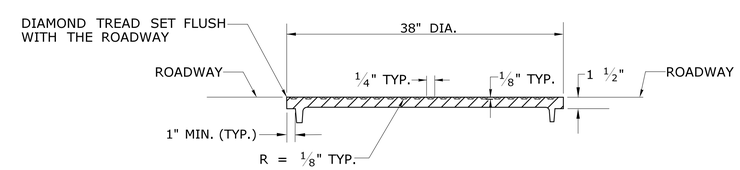

MANHOLE COVER WITH DIAMOND PATTERN

REV.	DATE	REVISION DESCRIPTION	SHEET NO.

THE INFORMATION, INCLUDING ESTIMATED QUANTITIES OF WORK, SHOWN ON THESE SHEETS IS BASED ON LIMITED INVESTIGATIONS BY THE STATE AND IS IN NO WAY WARRANTED TO INDICATE THE CONDITIONS OF ACTUAL QUANTITIES OF WORK WHICH WILL BE REQUIRED.

Plotted Date: 8/14/2019

DESIGNER/DRAFTER: RF

CHECKED BY: SN

STATE OF CONNECTICUT
DEPARTMENT OF TRANSPORTATION

Filename: ...\Plan\CTDOT_HIGHWAY_GD.dgn

SIGNATURE/ BLOCK:

OFFICE OF ENGINEERING

APPROVED BY:

PROJECT TITLE:

REPLACEMENT OF BRIDGE 00681 - HUNTINGTON RD. (RTE.14) OVER THE MERRICK BROOK

TOWN: **TOWN OF SCOTLAND**

DRAWING TITLE: **MANHOLE FRAME AND COVER**

PROJECT NO. **0123-0066**

DRAWING NO. **DGS-09**

SHEET NO. **4.10**

GENERAL NOTES:

1. ALL DIMENSIONS ARE SUBJECT TO MANUFACTURERS TOLERANCE.
2. SEE GUIDE SHEET NO. DGS-09 FOR MANHOLE FRAME, GRATE AND COVER DETAIL.

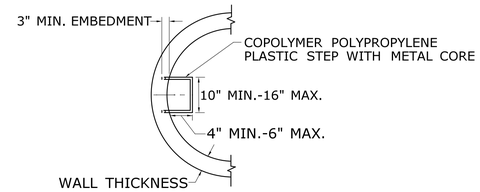

STEP DETAIL

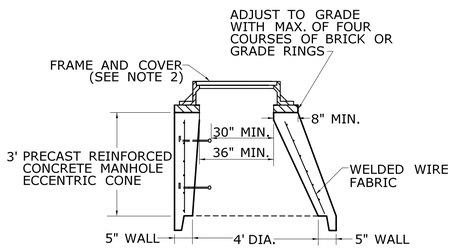

ECCENTRIC CONE SECTION

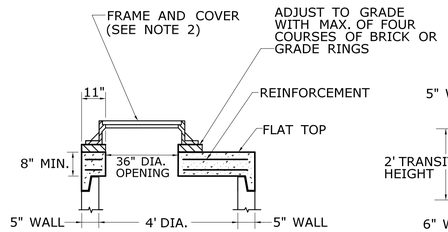

FLAT SLAB TOP FOR RISER SECTION

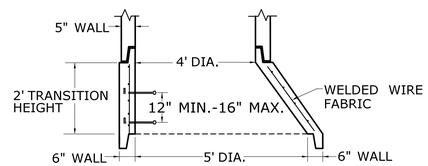

TRANSITION SECTION

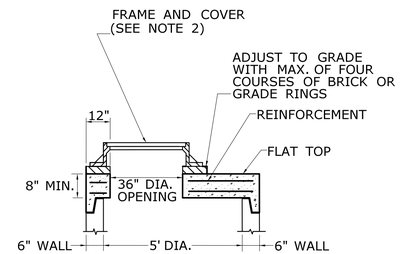

FLAT SLAB TOP FOR RISER SECTION

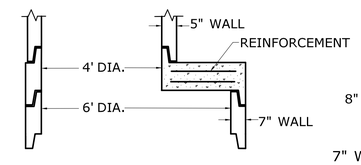

REDUCER SECTION

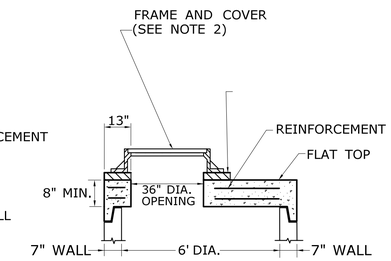

FLAT SLAB TOP FOR RISER SECTION

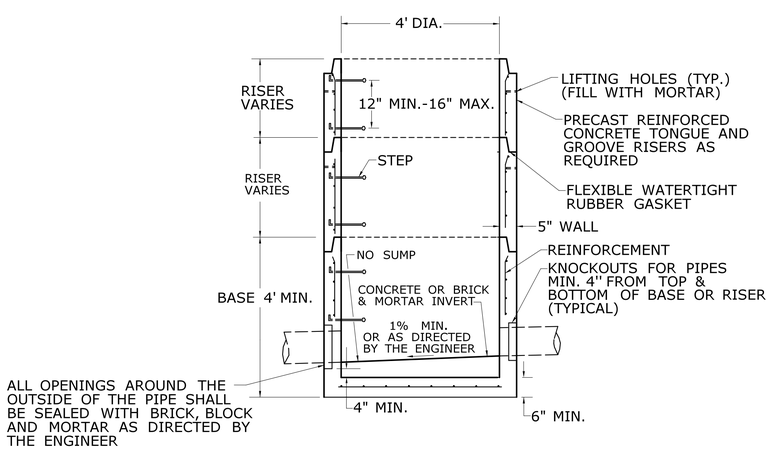

SECTION
4' DIAMETER REINFORCED PRECAST CONCRETE MANHOLE

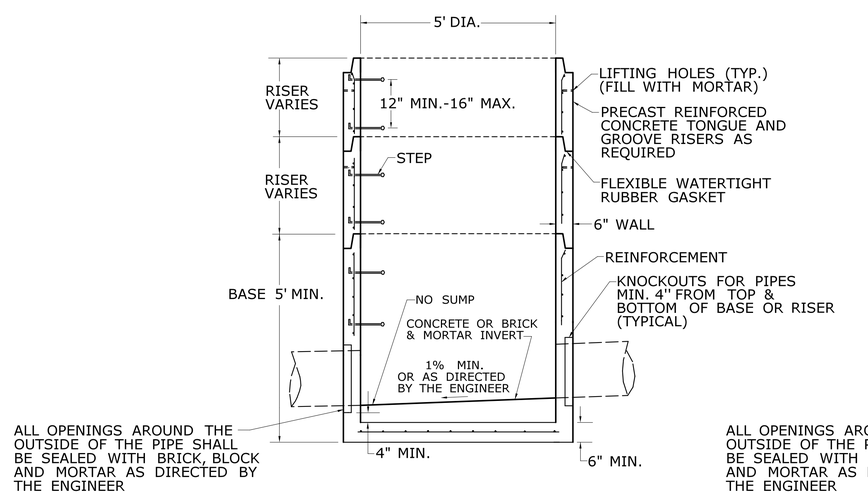

SECTION
5' DIAMETER REINFORCED PRECAST CONCRETE MANHOLE

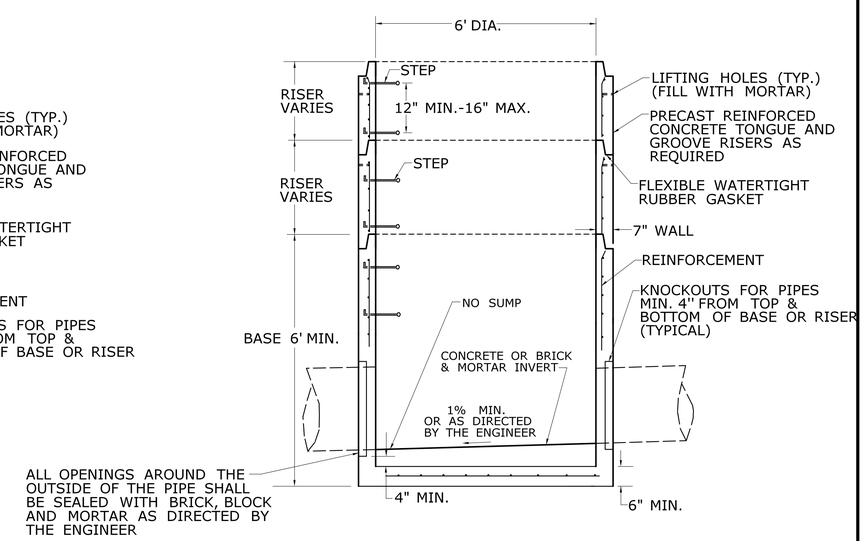

SECTION
6' DIAMETER REINFORCED PRECAST CONCRETE MANHOLE

REV.	DATE	REVISION DESCRIPTION	SHEET NO.

THE INFORMATION, INCLUDING ESTIMATED QUANTITIES OF WORK, SHOWN ON THESE SHEETS IS BASED ON LIMITED INVESTIGATIONS BY THE STATE AND IS IN NO WAY WARRANTED TO INDICATE THE CONDITIONS OF ACTUAL QUANTITIES OF WORK WHICH WILL BE REQUIRED.

Plotted Date: 8/14/2019

DESIGNER/DRAFTER: RF
CHECKED BY: SN

STATE OF CONNECTICUT
DEPARTMENT OF TRANSPORTATION

Filename: ...\Plan\CTDOT_HIGHWAY_GD.dgn

SIGNATURE/BLOCK:
OFFICE OF ENGINEERING
APPROVED BY:

PROJECT TITLE:
REPLACEMENT OF BRIDGE 00681 - HUNTINGTON RD. (RTE.14) OVER THE MERRICK BROOK

TOWN:
TOWN OF SCOTLAND

DRAWING TITLE:
REINFORCED PRECAST CONCRETE MANHOLE

PROJECT NO. **0123-0066**
DRAWING NO. **DGS-10**
SHEET NO. **4.11**

GENERAL NOTES:

1. SEE GUIDE SHEET NO. DGS-09 FOR MANHOLE FRAME, GRATE AND COVER DETAIL.

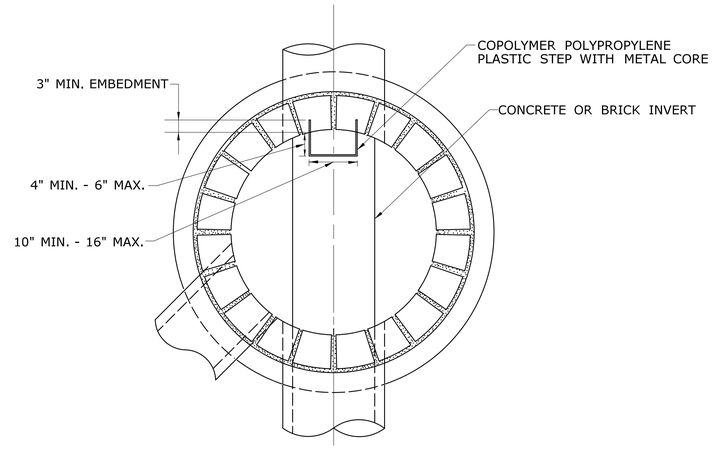

PLAN

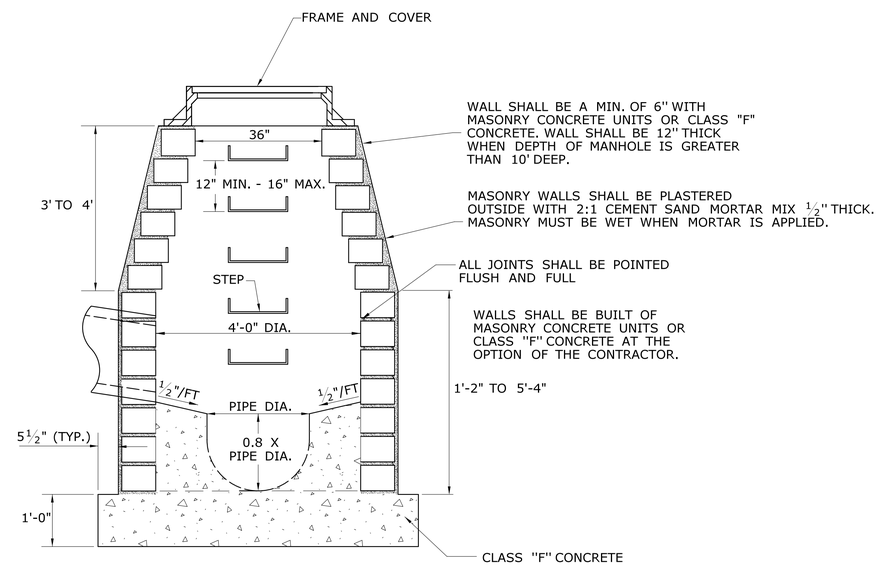

MANHOLE SECTION

REV.	DATE	REVISION DESCRIPTION	SHEET NO.

THE INFORMATION, INCLUDING ESTIMATED QUANTITIES OF WORK, SHOWN ON THESE SHEETS IS BASED ON LIMITED INVESTIGATIONS BY THE STATE AND IS IN NO WAY WARRANTED TO INDICATE THE CONDITIONS OF ACTUAL QUANTITIES OF WORK WHICH WILL BE REQUIRED.

Plotted Date: 8/14/2019

DESIGNER/DRAFTER: RF

CHECKED BY: SN

STATE OF CONNECTICUT
DEPARTMENT OF TRANSPORTATION

Filename: ...\Plan\CTDOT_HIGHWAY_GD.dgn

SIGNATURE/ BLOCK:
OFFICE OF ENGINEERING

APPROVED BY:
Matthew Vail

PROJECT TITLE:
REPLACEMENT OF BRIDGE 00681 - HUNTINGTON RD. (RTE.14) OVER THE MERRICK BROOK

TOWN:
TOWN OF SCOTLAND

DRAWING TITLE:
MANHOLE NON-PRECAST CONCRETE UNIT

PROJECT NO. **0123-0066**

DRAWING NO. **DGS-11**

SHEET NO. **4.12**

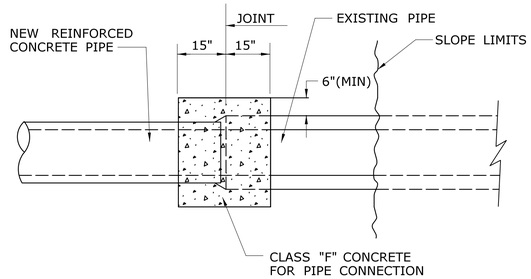

PLAN

NOTES:

1. "CONCRETE PIPE CONNECTION" IS INTENDED FOR USE WHERE A REINFORCED CONCRETE PIPE REPAIR OR MODIFICATION IS NEEDED SOMEWHERE WITHIN A PIPE RUN WHERE A BELL/SPIGOT JOINT CANNOT BE ACHIEVED.
2. MAINTAIN INTERIOR ALIGNMENT OF PIPE AT JOINTS UNTIL CONCRETE IS PROPERLY CURED.
3. BACKFILL OF PIPE REPAIR WITH SUITABLE MATERIAL MAY NOT TAKE PLACE UNTIL CONCRETE IS PROPERLY CURED.
4. CONTRACTOR SHALL MAINTAIN LINE AND GRADE OF PIPE REPAIR OR MODIFICATION BY METHODS APPROVED BY THE ENGINEER.
5. HOLES OR GAPS AT JOINT LARGER THAN 3/8" SHALL BE FILLED OR WRAPPED TO PREVENT CONCRETE FROM ENTERING PIPE.

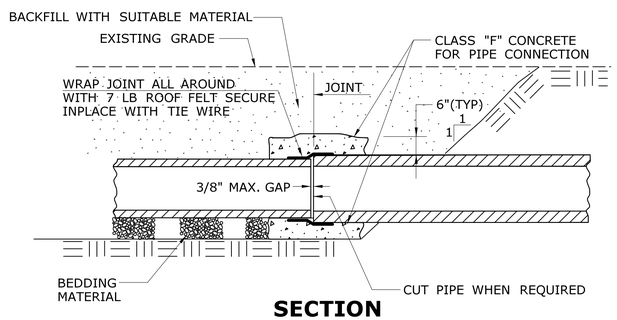

SECTION
CONCRETE PIPE CONNECTION

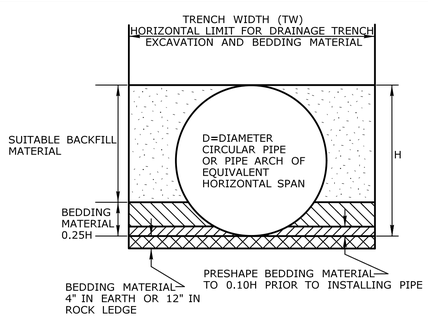

PIPE TRENCH
FOR PIPES LESS THAN 48"

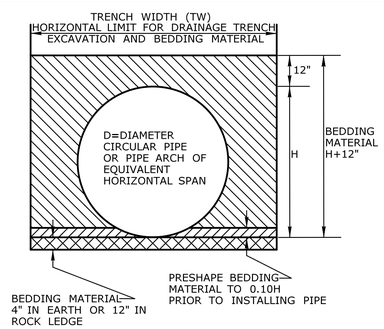

PIPE TRENCH
FOR PIPES GREATER THAN OR EQUAL TO 48"

TRENCH WIDTH (TW) CHART

PIPE, PIPE-ARCH, OR DRAINAGE STRUCTURE	TRENCH WIDTH
PIPE OR PIPE-ARCH WITH NOMINAL INSIDE HORIZONTAL SPAN LESS THAN 30"	2' GREATER THAN NOMINAL INSIDE HORIZONTAL SPAN
PIPE OR PIPE-ARCH WITH NOMINAL INSIDE HORIZONTAL SPAN GREATER THAN OR EQUAL TO 30"	3' GREATER THAN NOMINAL INSIDE HORIZONTAL SPAN
PIPE OR PIPE-ARCH FABRICATED FROM STRUCTURAL PLATES	4' GREATER THAN NOMINAL INSIDE HORIZONTAL SPAN
DRAINAGE STRUCTURES	2' BEYOND ALL EXTERIOR OR FOUNDATION WALLS

GENERAL NOTES:

1. ROCK REMOVED BEYOND THE MAXIMUM LIMIT SHOWN SHALL BE REPLACED WITH CEMENT RUBBLE MASONRY AND GRANULAR FILL.
2. FILL, AS REQUIRED TO CLOSE THE OPENING AS SHOWN ON THE PLANS, WILL BE AT THE CONTRACTORS EXPENSE. HOWEVER, THE PAY LIMIT LINES MAY BE MODIFIED TO COINCIDE WITH NATURAL FAULTS OR FISSURES OF ROCK AS THE ENGINEER MAY DETERMINE.
3. COATED CORRUGATED METAL PPE (C.C.M.P.).
4. D = PIPE DIAMETER.

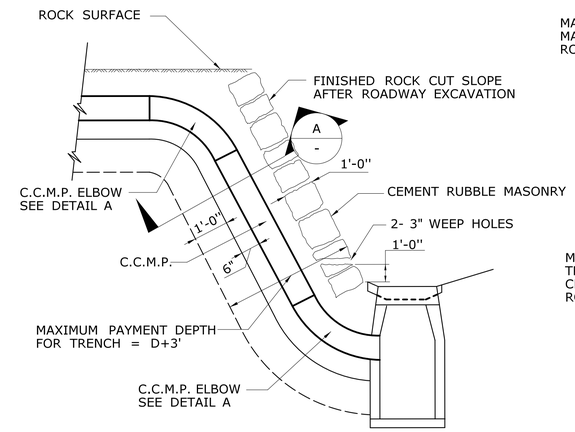

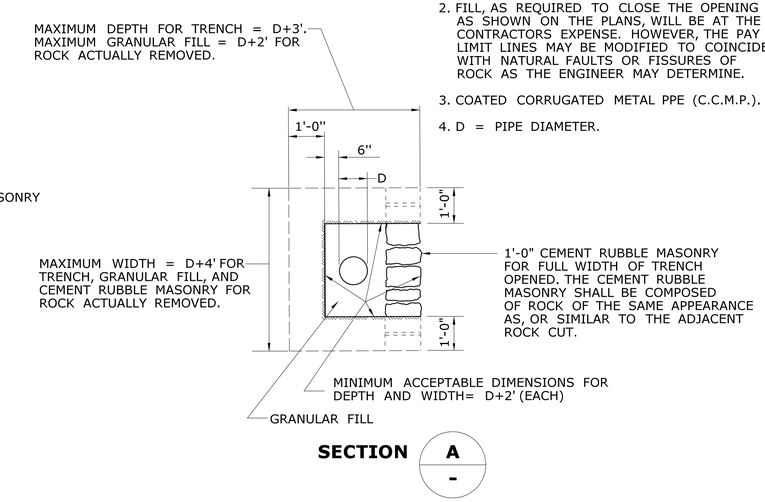

TYPICAL INSTALLATION OF C.C.M.P. IN ROCK SLOPE

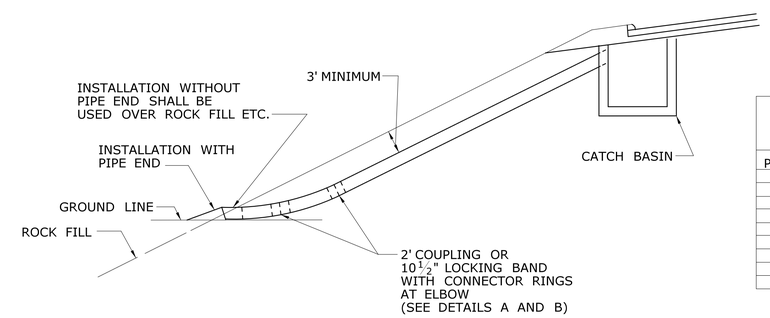

TYPICAL INSTALLATION OF C.C.M.P ELBOW IN FILL SLOPE

TABLE C
CONNECTOR RINGS

PIPE DIAMETER	LENGTH OF RING
12"	52"
15"	61"
18"	71"
21"	80"
24"	90"
30"	108"
36"	128"
42"	147"
48"	166"

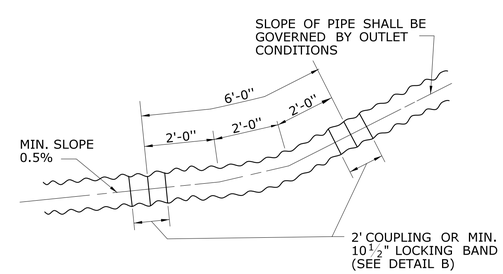

DETAIL A
C.C.M.P. ELBOW AND COUPLING

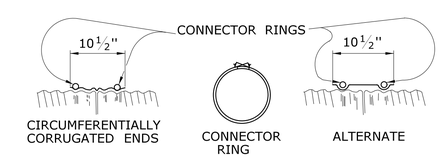

RODS: 7/16" DIAMETER ELECTRO-GALVANIZED WITH 6" LENGTH OF ½" ROLLED THREADS EACH END, FURNISHED CURVED, TO FIT PIPE. SEE TABLE C

LUGS: DOUBLE TAKE UP, CAST IRON, ELECTRO-GALVANIZED.

NOTE: THE COUPLER FASTENING DEVICE SHALL NOT INTERFERE WITH INSTALLATION OF CONNECTOR RINGS.

DETAIL B
ELBOW DIMENSIONS

REV.	DATE	REVISION DESCRIPTION	SHEET NO.

THE INFORMATION, INCLUDING ESTIMATED QUANTITIES OF WORK, SHOWN ON THESE SHEETS IS BASED ON LIMITED INVESTIGATIONS BY THE STATE AND IS IN NO WAY WARRANTED TO INDICATE THE CONDITIONS OF ACTUAL QUANTITIES OF WORK WHICH WILL BE REQUIRED.

Plotted Date: 8/14/2019

DESIGNER/DRAFTER: RF
CHECKED BY: SN

STATE OF CONNECTICUT
DEPARTMENT OF TRANSPORTATION

Filename: ...\Plan\CTDOT_HIGHWAY_GD.dgn

SIGNATURE/BLOCK: OFFICE OF ENGINEERING
APPROVED BY: Matthew Ford

PROJECT TITLE: REPLACEMENT OF BRIDGE 00681 - HUNTINGTON RD. (RTE.14) OVER THE MERRICK BROOK

TOWN: TOWN OF SCOTLAND

DRAWING TITLE: C.C.M. PIPE INSTALLATION & PIPE TRENCH DETAIL

PROJECT NO. 0123-0066
DRAWING NO. DGS-12
SHEET NO. 4.13

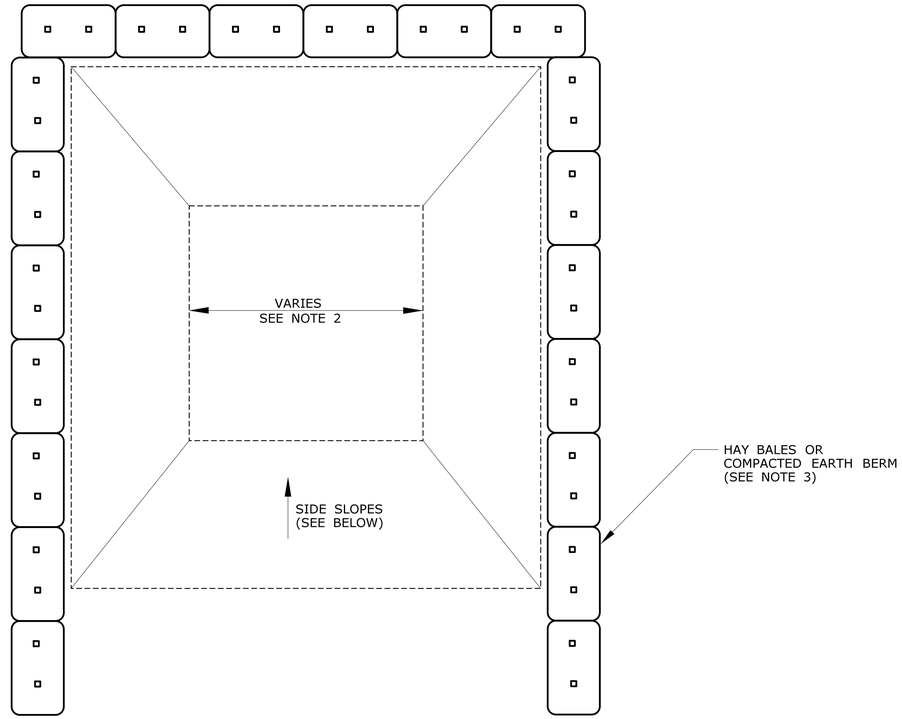

PLAN

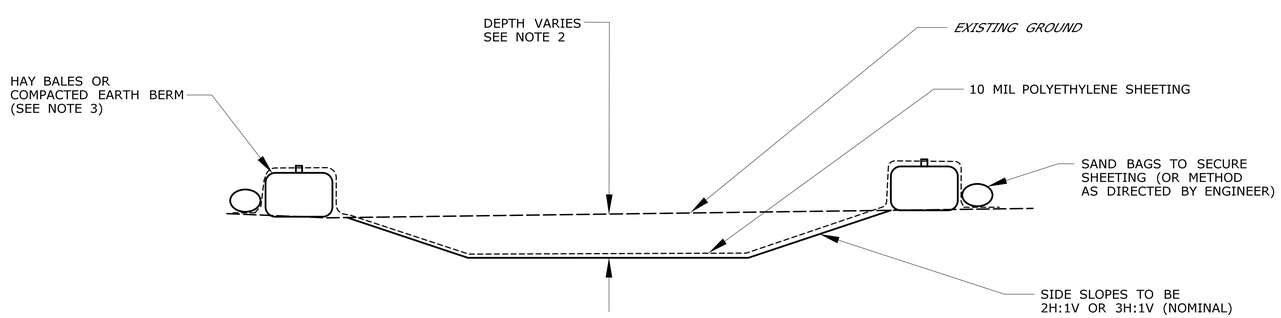

CONCRETE WASHOUT AREA
NOT TO SCALE
(SEE NOTE 2)

GENERAL NOTES:

1. CONCRETE WASHOUT AREA(S) SHALL BE INSTALLED PRIOR TO CONCRETE PLACEMENT ON SITE. THE CONCRETE WASHOUT AREA SHALL BE ENTIRELY SELF-CONTAINED.

2. THE CONTRACTOR SHALL SUBMIT THE DESIGN, LOCATION AND SIZING OF THE CONCRETE WASHOUT AREA(S) WITH THE PROJECT'S EROSION AND SEDIMENTATION CONTROL PLAN AND SHALL BE APPROVED BY THE ENGINEER.

   LOCATION: WASHOUT AREA(S) ARE TO BE LOCATED AT LEAST 50 FEET FROM ANY STREAM, WETLAND, STORM DRAINS, OR OTHER SENSITIVE RESOURCE. THE FLOOD CONTINGENCY PLAN MUST ADDRESS THE CONCRETE WASHOUT IF THE WASHOUT IS TO BE LOCATED WITHIN THE FLOODPLAIN.

   SIZE: THE WASHOUT MUST HAVE SUFFICIENT VOLUME TO CONTAIN ALL LIQUID AND CONCRETE WASTE GENERATED BY WASHOUT OPERATIONS INCLUDING, BUT NOT LIMITED TO, OPERATIONS ASSOCIATED WITH GROUT AND MORTAR.

3. SURFACE DISCHARGE IS UNACCEPTABLE. THEREFORE, HAY BALES OR OTHER CONTROL MEASURES, AS APPROVED BY THE ENGINEER, SHOULD BE USED AROUND THE PERIMETER OF THE CONCRETE WASHOUT AREA FOR CONTAINMENT.

4. SIGNS SHOULD BE PLACED AT THE CONSTRUCTION ENTRANCE, AT THE CONCRETE AREA(S) AND ELSEWHERE AS NECESSARY TO CLEARLY INDICATE THE LOCATION OF THE CONCRETE WASHOUT TO OPERATORS OF CONCRETE TRUCKS AND PUMP RIGS. WASHOUT AREA(S) SHOULD BE FLAGGED WITH SAFETY FENCING OR OTHER APPROVED METHOD.

5. WASHOUT AREA(S) ARE TO BE INSPECTED AT LEAST ONCE A WEEK FOR STRUCTURAL INTEGRITY, ADEQUATE HOLDING CAPACITY AND CHECKED FOR LEAKS, TEARS, OR OVERFLOWS. (AS REQUIRED BY THE CONSTRUCTION SITE ENVIRONMENTAL INSPECTION REPORT) WASHOUT AREA(S) SHOULD BE CHECKED AFTER HEAVY RAINS.

6. HARDENED CONCRETE WASTE SHOULD BE REMOVED AND DISPOSED OF WHEN THE WASTE HAS ACCUMULATED TO HALF OF THE CONCRETE WASHOUT'S DEPTH. THE WASTE CAN BE STORED AT AN UPLAND LOCATION, AS APPROVED BY THE ENGINEER. ALL CONCRETE WASTE SHALL BE DISPOSED OF IN A MANNER CONSISTENT WITH ALL APPLICABLE LAWS, REGULATIONS, AND GUIDELINES.

7. PAYMENT FOR THIS ITEM IS TO BE INCLUDED UNDER THE GENERAL COST OF THE WORK FOR THE PROJECT, INCLUDING SITE RESTORATION.

REV.	DATE	REVISION DESCRIPTION	SHEET NO.

THE INFORMATION, INCLUDING ESTIMATED QUANTITIES OF WORK, SHOWN ON THESE SHEETS IS BASED ON LIMITED INVESTIGATIONS BY THE STATE AND IS IN NO WAY WARRANTED TO INDICATE THE CONDITIONS OF ACTUAL QUANTITIES OF WORK WHICH WILL BE REQUIRED.

Plotted Date: 8/14/2019

DESIGNER/DRAFTER: RF
CHECKED BY: SN

STATE OF CONNECTICUT
DEPARTMENT OF TRANSPORTATION

Filename: ...\Plan\CTDOT_HIGHWAY_GD.dgn

SIGNATURE/BLOCK:
OFFICE OF ENGINEERING
APPROVED BY:
Matthew Vail

PROJECT TITLE:
REPLACEMENT OF BRIDGE 00681 - HUNTINGTON RD. (RTE.14) OVER THE MERRICK BROOK

TOWN: TOWN OF SCOTLAND

DRAWING TITLE: CONCRETE WASHOUT AREA

PROJECT NO. 0123-0066
DRAWING NO. MDS-01
SHEET NO. 4.14

LEGEND

1. 2" HMA S0.5 TRAFFIC LEVEL 2 (SINGLE LIFT)
1a. 2" HMA S0.5 TRAFFIC LEVEL 2 (SINGLE LIFT)
1b. 1" HMA S0.25 TRAFFIC LEVEL 2 (SINGLE LIFT)
2. 3" HMA S1.0 TRAFFIC LEVEL 2 (SINGLE LIFT)
3. 12" SUBBASE
4. 2" FINE MILLING OF BITUMINOUS CONCRETE
5. FORMATION OF SUBGRADE
6. BITUMINOUS CONCRETE LIP CURBING
7. FURNISHING AND PLACING TOPSOIL
8. TURF ESTABLISHMENT - LAWN
9. CUT BITUMINOUS
10. BRIDGE DECK

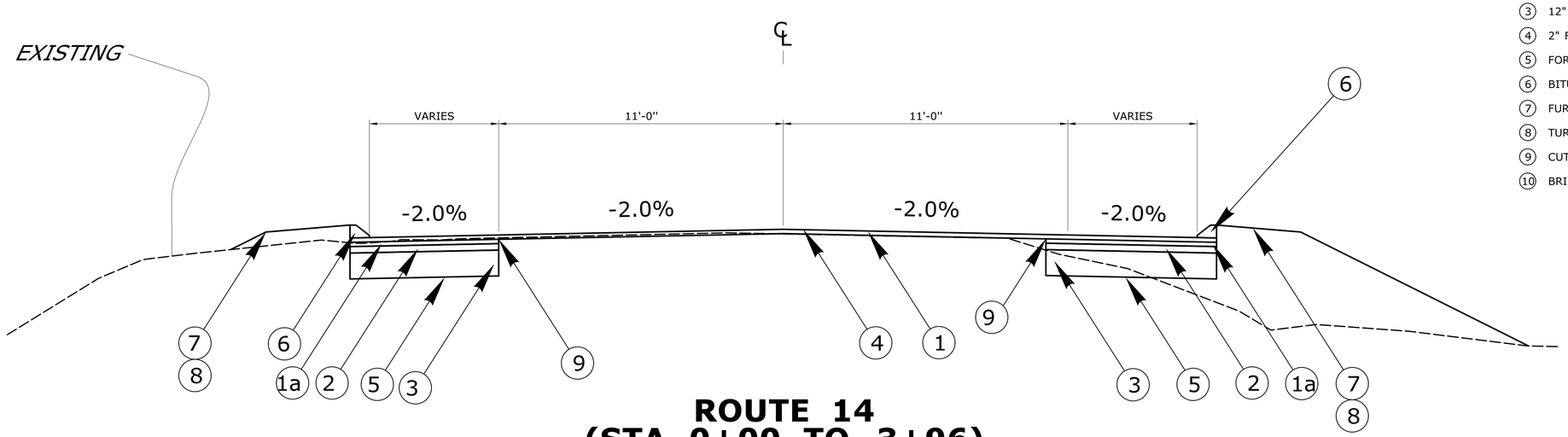

ROUTE 14
(STA. 0+00 TO 3+96)

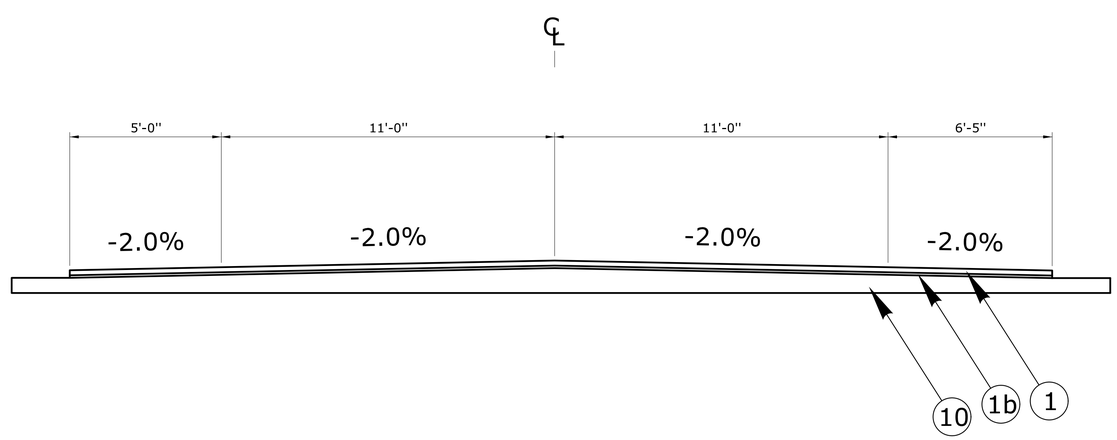

ROUTE 14 BRIDGE SECTION
(SEE STRUCTURE PLANS)

GENERAL NOTES:

1. TYPICAL SECTION SHALL BE USED IN CONJUNCTION WITH ROADWAY ALIGNMENT PLANS TO DETERMINE THE PROPER ROADWAY WIDTH.
2. FULL DEPTH LIMITS ARE SHOWN ON PLAN SHEET AND WILL BE A MINIMUM OF 2' WIDE.
3. TEMP PAVEMENT OVER MICROPILES SHALL CONSIST OF 6" OF HMA S0.5 PLACED IN TWO EVEN LIFTS.

REV.	DATE	REVISION DESCRIPTION	SHEET NO.

THE INFORMATION, INCLUDING ESTIMATED QUANTITIES OF WORK, SHOWN ON THESE SHEETS IS BASED ON LIMITED INVESTIGATIONS BY THE STATE AND IS IN NO WAY WARRANTED TO INDICATE THE CONDITIONS OF ACTUAL QUANTITIES OF WORK WHICH WILL BE REQUIRED.

Plotted Date: 8/14/2019

DESIGNER/DRAFTER: RF
CHECKED BY: SN
SCALE AS NOTED

STATE OF CONNECTICUT
DEPARTMENT OF TRANSPORTATION

Filename: ...\HW_MSH_0123_0066_TYP-01.dgn

SIGNATURE/ BLOCK:
OFFICE OF ENGINEERING
APPROVED BY:

PROJECT TITLE:
REPLACEMENT OF BRIDGE 00681 - HUNTINGTON RD. (RTE.14) OVER THE MERRICK BROOK

TOWN: TOWN OF SCOTLAND

DRAWING TITLE: ROUTE 14 TYPICAL SECTIONS

PROJECT NO. 0123-0066
DRAWING NO. TYP-01
SHEET NO. 4.15

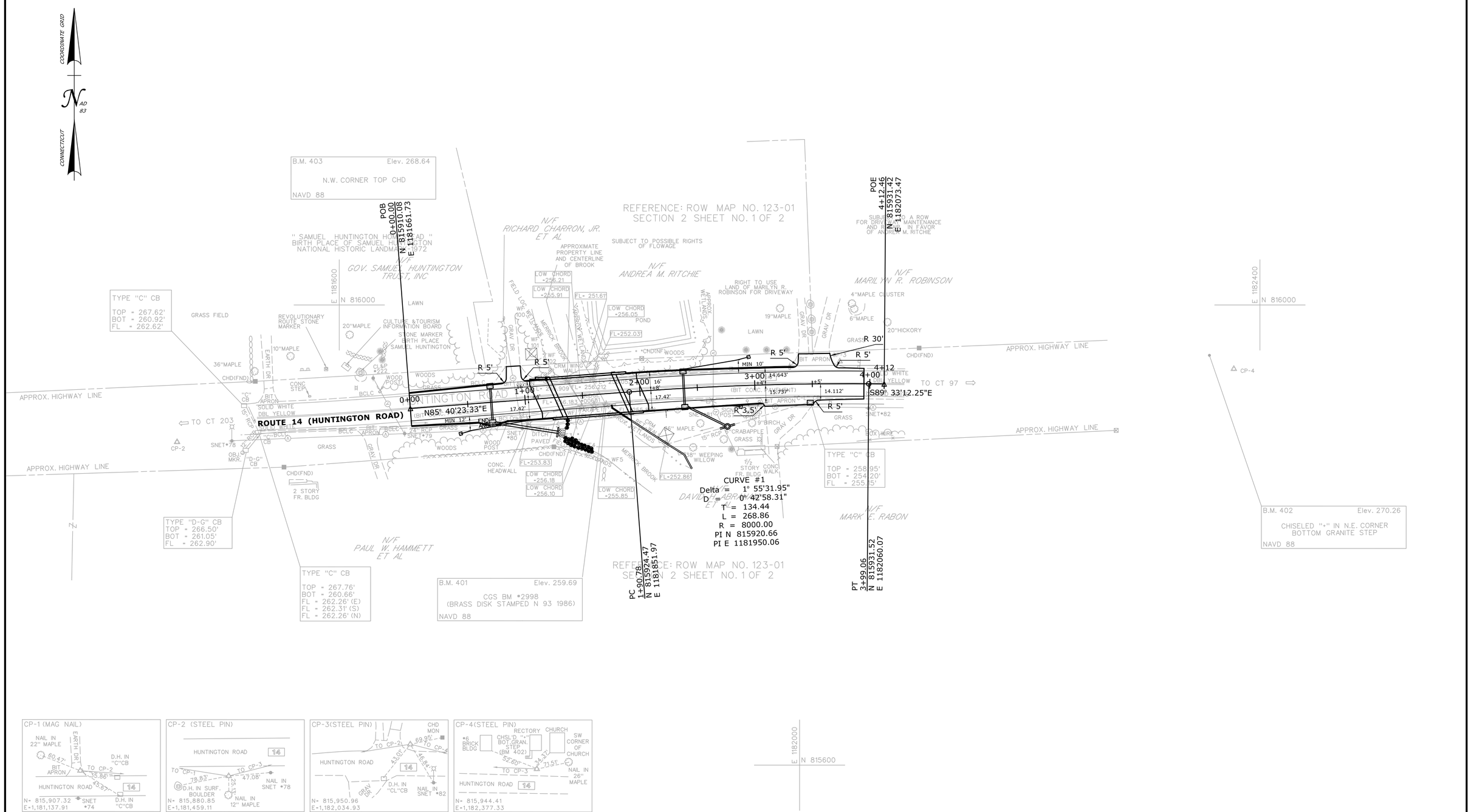

REV.	DATE	REVISION DESCRIPTION	SHEET NO.

THE INFORMATION, INCLUDING ESTIMATED QUANTITIES OF WORK, SHOWN ON THESE SHEETS IS BASED ON LIMITED INVESTIGATIONS BY THE STATE AND IS IN NO WAY WARRANTED TO INDICATE THE CONDITIONS OF ACTUAL QUANTITIES OF WORK WHICH WILL BE REQUIRED.

Plotted Date: 8/14/2019

DESIGNER/DRAFTER: RF

CHECKED BY: SN

SCALE IN FEET 0 40 80

SCALE 1"=40'

STATE OF CONNECTICUT
DEPARTMENT OF TRANSPORTATION

Filename: ...\HW_MSH_0123_0066_ALN-01.dgn

SIGNATURE/ BLOCK:
OFFICE OF ENGINEERING

APPROVED BY:

PROJECT TITLE:
REPLACEMENT OF BRIDGE 00681 - HUNTINGTON RD. (RTE.14) OVER THE MERRICK BROOK

TOWN:
TOWN OF SCOTLAND

DRAWING TITLE:
ALIGNMENT SHEET ROUTE 14

PROJECT NO. **0123-0066**

DRAWING NO. **ALN-01**

SHEET NO. **4.16**

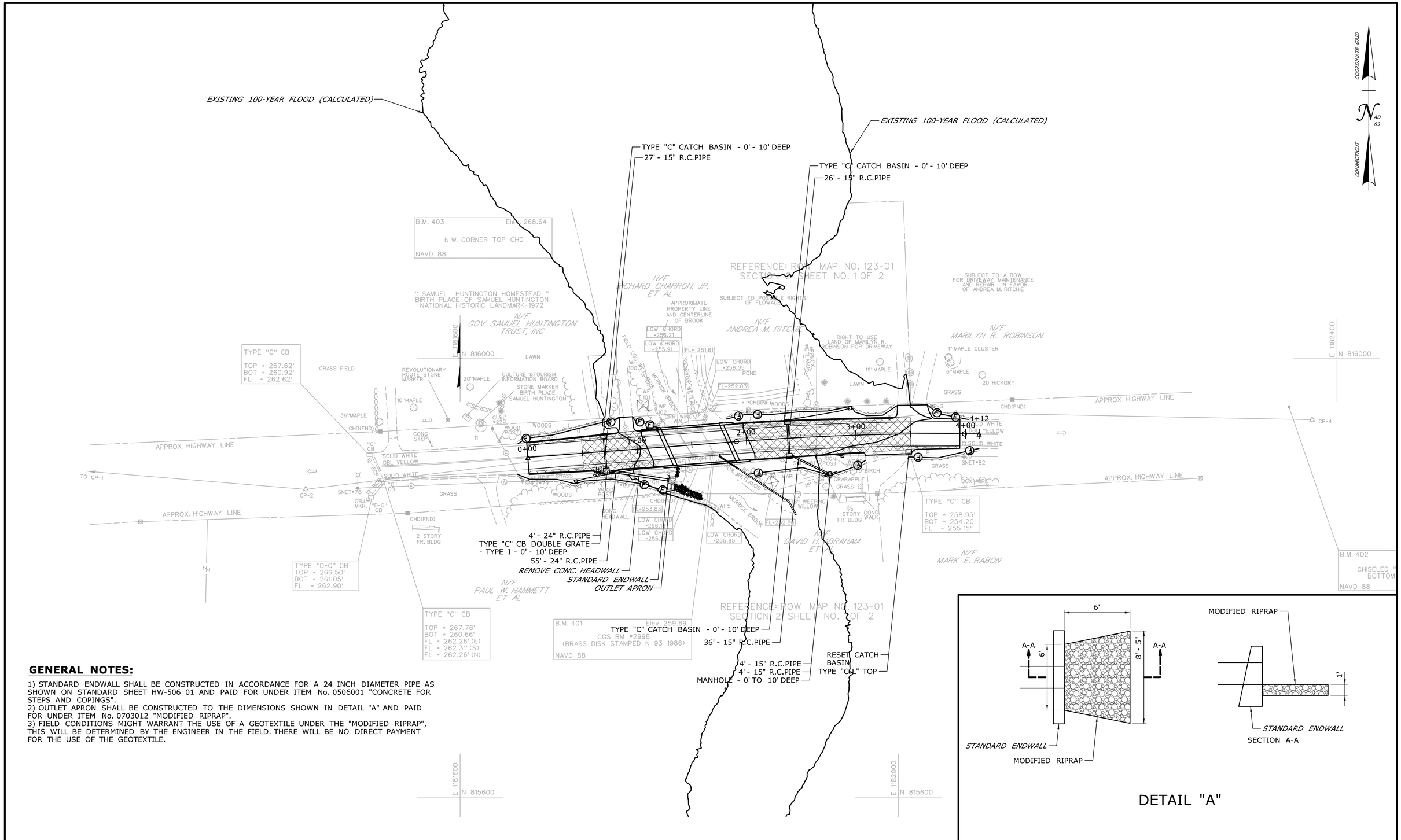

GENERAL NOTES:

1) STANDARD ENDWALL SHALL BE CONSTRUCTED IN ACCORDANCE FOR A 24 INCH DIAMETER PIPE AS SHOWN ON STANDARD SHEET HW-506 01 AND PAID FOR UNDER ITEM No. 0506001 "CONCRETE FOR STEPS AND COPINGS".
2) OUTLET APRON SHALL BE CONSTRUCTED TO THE DIMENSIONS SHOWN IN DETAIL "A" AND PAID FOR UNDER ITEM No. 0703012 "MODIFIED RIPRAP".
3) FIELD CONDITIONS MIGHT WARRANT THE USE OF A GEOTEXTILE UNDER THE "MODIFIED RIPRAP", THIS WILL BE DETERMINED BY THE ENGINEER IN THE FIELD. THERE WILL BE NO DIRECT PAYMENT FOR THE USE OF THE GEOTEXTILE.

REV.	DATE	REVISION DESCRIPTION	SHEET NO.

THE INFORMATION, INCLUDING ESTIMATED QUANTITIES OF WORK, SHOWN ON THESE SHEETS IS BASED ON LIMITED INVESTIGATIONS BY THE STATE AND IS IN NO WAY WARRANTED TO INDICATE THE CONDITIONS OF ACTUAL QUANTITIES OF WORK WHICH WILL BE REQUIRED.

Plotted Date: 8/14/2019

DESIGNER/DRAFTER: RF
CHECKED BY: SN
SCALE IN FEET 0 40 80
SCALE 1"=40'

STATE OF CONNECTICUT
DEPARTMENT OF TRANSPORTATION

Filename: ...\HW_MSH_0123_0066_DRG-01.dgn

SIGNATURE/ BLOCK: OFFICE OF ENGINEERING
APPROVED BY: Matthew Vail

PROJECT TITLE: REPLACEMENT OF BRIDGE 00681 - HUNTINGTON RD. (RTE.14) OVER THE MERRICK BROOK

TOWN: TOWN OF SCOTLAND

DRAWING TITLE: DRAINAGE ROUTE 14

PROJECT NO. 0123-0066
DRAWING NO. DRG-01
SHEET NO. 4.17

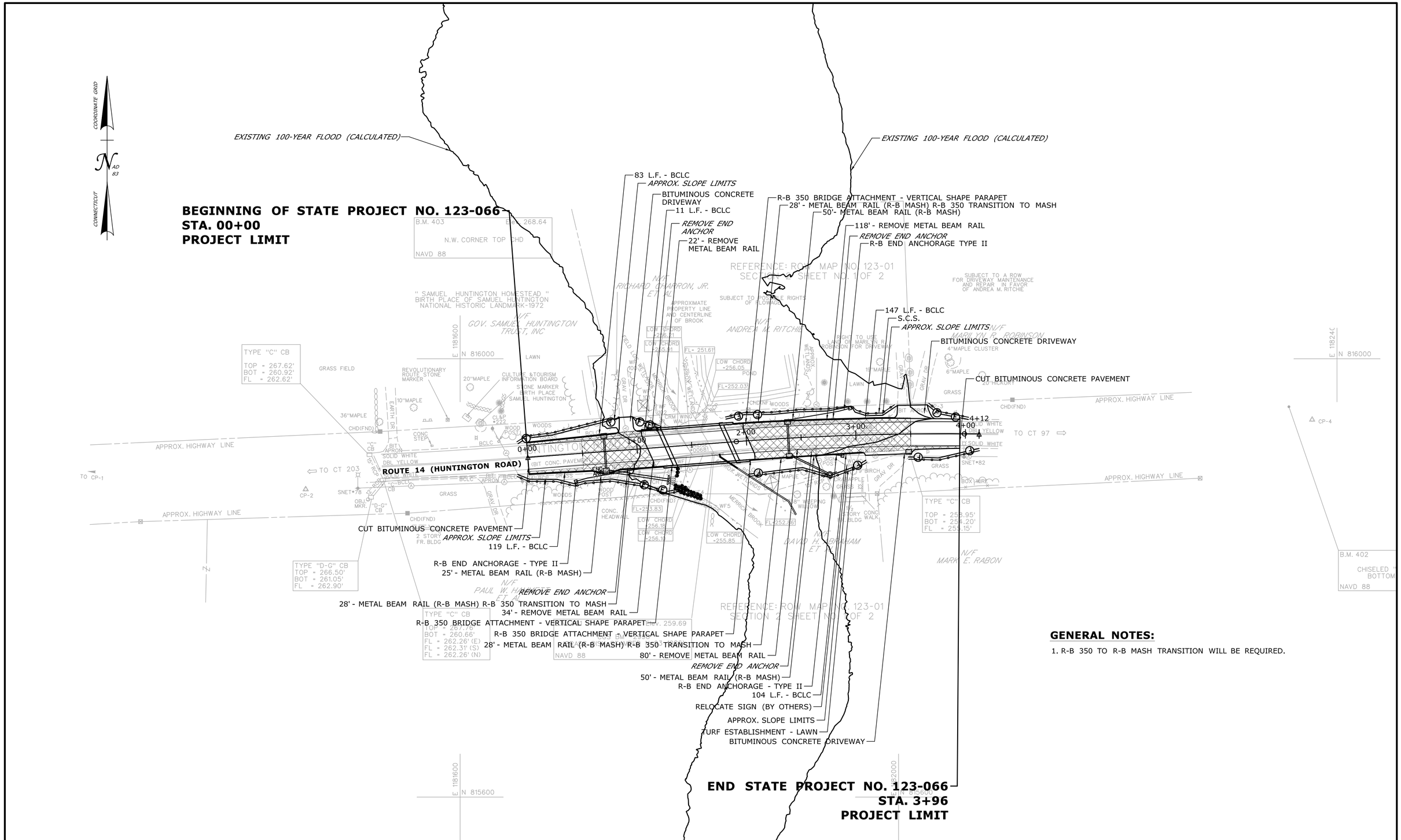

GENERAL NOTES:

1. R-B 350 TO R-B MASH TRANSITION WILL BE REQUIRED.

REV.	DATE	REVISION DESCRIPTION	SHEET NO.

THE INFORMATION, INCLUDING ESTIMATED QUANTITIES OF WORK, SHOWN ON THESE SHEETS IS BASED ON LIMITED INVESTIGATIONS BY THE STATE AND IS IN NO WAY WARRANTED TO INDICATE THE CONDITIONS OF ACTUAL QUANTITIES OF WORK WHICH WILL BE REQUIRED.

Plotted Date: 8/14/2019

DESIGNER/DRAFTER: RF

CHECKED BY: SN

SCALE IN FEET 0 40 80

SCALE 1"=40'

STATE OF CONNECTICUT
DEPARTMENT OF TRANSPORTATION

Filename: ...\HW_MSH_0123_0066_PLN-01.dgn

SIGNATURE/ BLOCK: OFFICE OF ENGINEERING

APPROVED BY: Matthew Vail

PROJECT TITLE: REPLACEMENT OF BRIDGE 00681 - HUNTINGTON RD. (RTE.14) OVER THE MERRICK BROOK

TOWN: TOWN OF SCOTLAND

DRAWING TITLE: PLAN SHEET ROUTE 14

PROJECT NO. 0123-0066

DRAWING NO. PLN-01

SHEET NO. 4.18

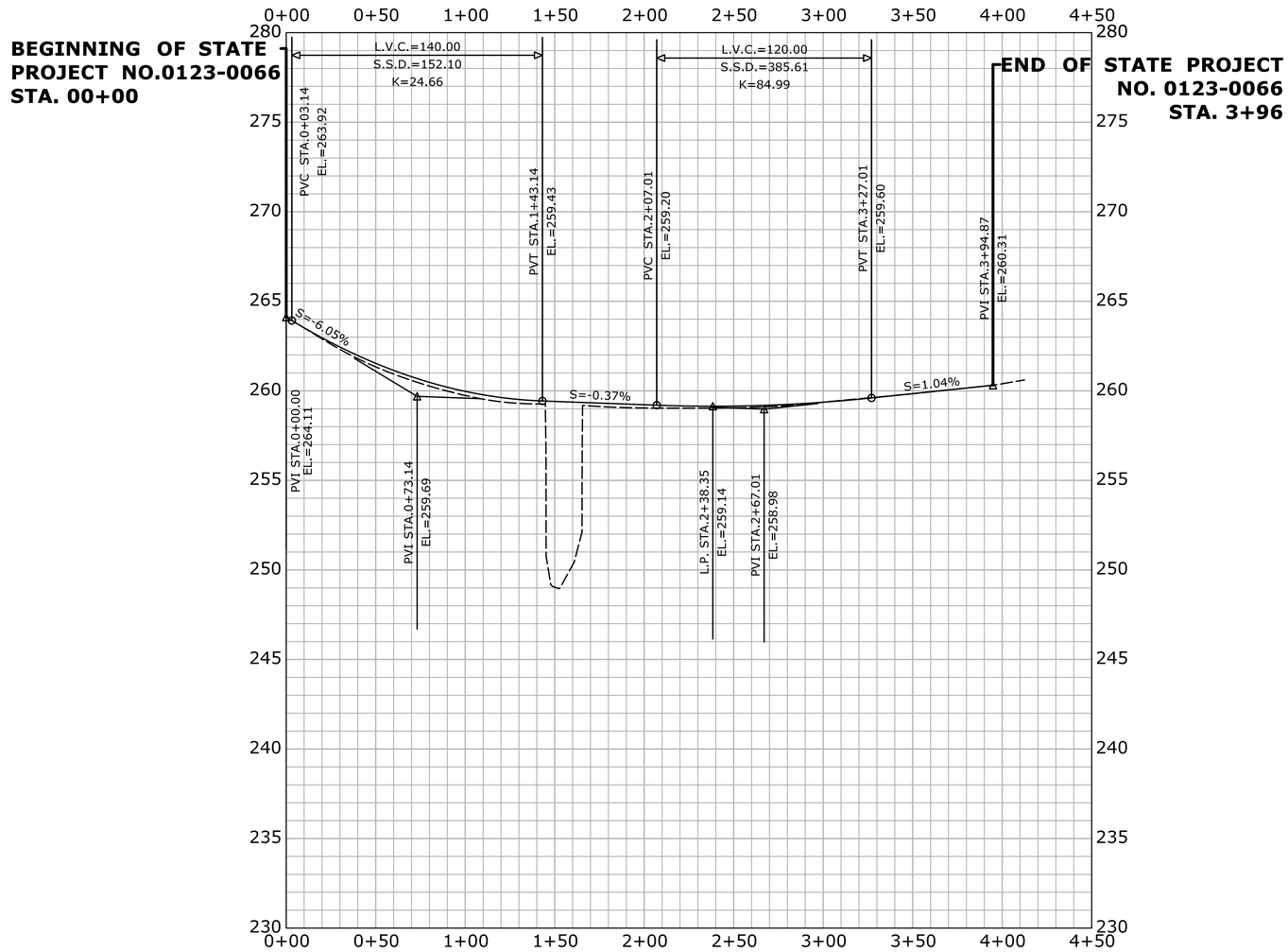

REV.	DATE	REVISION DESCRIPTION	SHEET NO.

THE INFORMATION, INCLUDING ESTIMATED QUANTITIES OF WORK, SHOWN ON THESE SHEETS IS BASED ON LIMITED INVESTIGATIONS BY THE STATE AND IS IN NO WAY WARRANTED TO INDICATE THE CONDITIONS OF ACTUAL QUANTITIES OF WORK WHICH WILL BE REQUIRED.

Plotted Date: 8/14/2019

DESIGNER/DRAFTER: RF

CHECKED BY: SN

HORIZ. SCALE IN FEET 0 40 80

VERT. SCALE IN FEET 0 4 8

STATE OF CONNECTICUT
DEPARTMENT OF TRANSPORTATION

Filename: ...\HW_MSH_0123_0066_PRO-01.dgn

SIGNATURE/ BLOCK:

OFFICE OF ENGINEERING

APPROVED BY:

Matthew Vail

PROJECT TITLE:

REPLACEMENT OF BRIDGE 00681 - HUNTINGTON RD. (RTE.14) OVER THE MERRICK BROOK

TOWN: TOWN OF SCOTLAND

DRAWING TITLE: ROUTE 14 PROFILE

PROJECT NO. 0123-0066

DRAWING NO. PRO-01

SHEET NO. 4.19

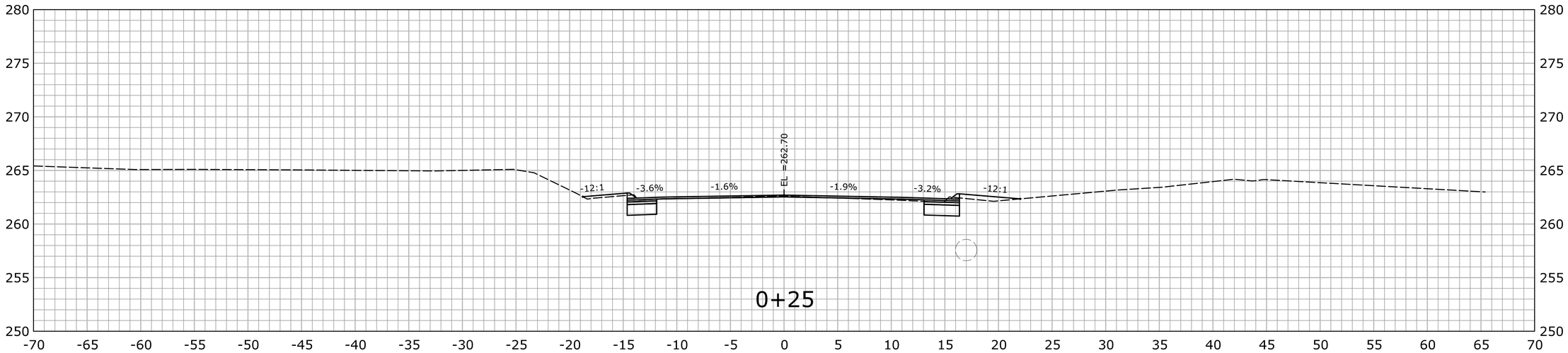

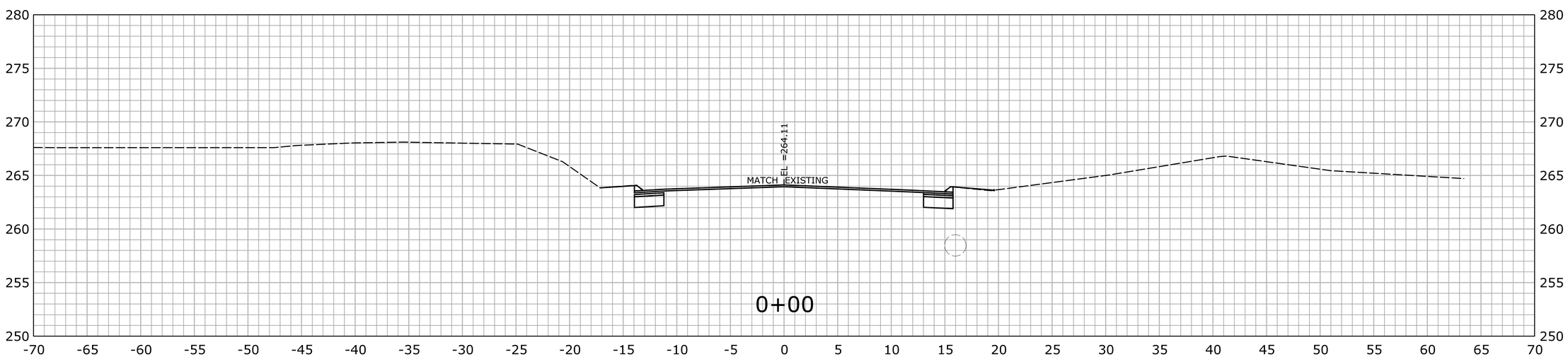

STA.0+00 TO STA.0+25

REV.	DATE	REVISION DESCRIPTION	SHEET NO.

THE INFORMATION, INCLUDING ESTIMATED QUANTITIES OF WORK, SHOWN ON THESE SHEETS IS BASED ON LIMITED INVESTIGATIONS BY THE STATE AND IS IN NO WAY WARRANTED TO INDICATE THE CONDITIONS OF ACTUAL QUANTITIES OF WORK WHICH WILL BE REQUIRED.

Plotted Date: 8/14/2019

DESIGNER/DRAFTER: RF

CHECKED BY: SN

SCALE IN FEET 0 5 10

SCALE 1" = 5'

STATE OF CONNECTICUT
DEPARTMENT OF TRANSPORTATION

Filename: ...\HW_MSH_0123_0066_XSC.dgn

SIGNATURE/ BLOCK:

OFFICE OF ENGINEERING

APPROVED BY:

PROJECT TITLE:

REPLACEMENT OF BRIDGE
00681 - HUNTINGTON RD. (RTE.14)
OVER THE MERRICK BROOK

TOWN:

TOWN OF SCOTLAND

DRAWING TITLE:

ROUTE 14
CROSS SECTIONS

PROJECT NO. 0123-0066

DRAWING NO. XSC-01

SHEET NO. 4.20

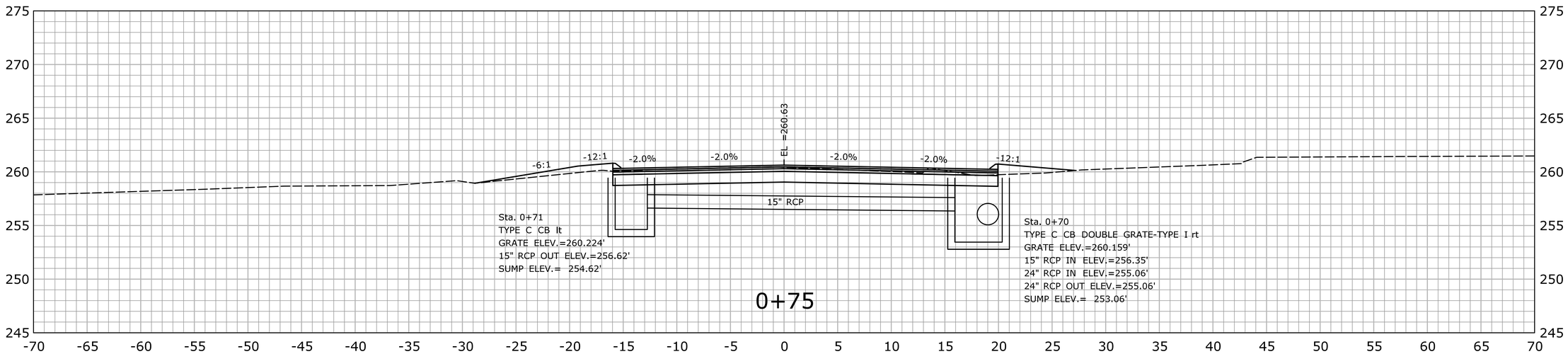

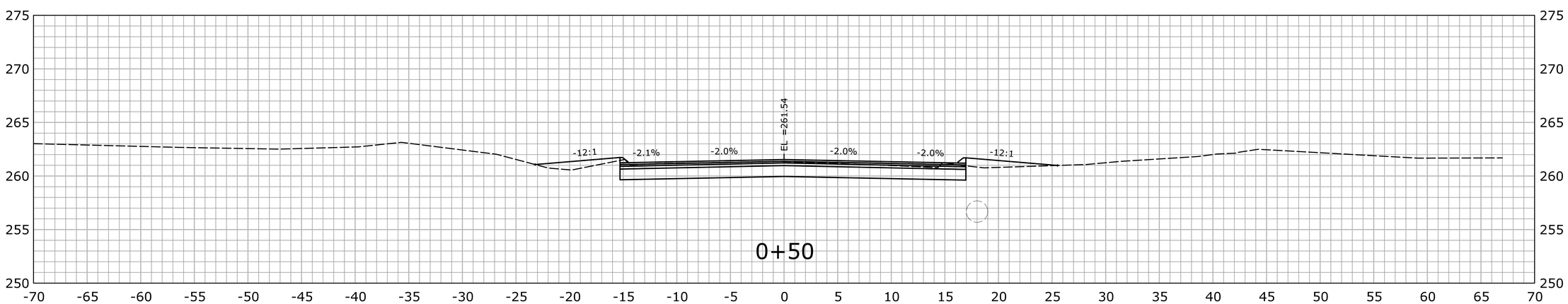

STA.0+50 TO STA.0+75

REV.	DATE	REVISION DESCRIPTION	SHEET NO.

THE INFORMATION, INCLUDING ESTIMATED QUANTITIES OF WORK, SHOWN ON THESE SHEETS IS BASED ON LIMITED INVESTIGATIONS BY THE STATE AND IS IN NO WAY WARRANTED TO INDICATE THE CONDITIONS OF ACTUAL QUANTITIES OF WORK WHICH WILL BE REQUIRED.

Plotted Date: 8/14/2019

DESIGNER/DRAFTER: RF

CHECKED BY: SN

SCALE IN FEET 0 5 10

SCALE 1" = 5'

STATE OF CONNECTICUT
DEPARTMENT OF TRANSPORTATION

Filename: ...\HW_MSH_0123_0066_XSC.dgn

SIGNATURE/ BLOCK:
OFFICE OF ENGINEERING

APPROVED BY:

PROJECT TITLE:
REPLACEMENT OF BRIDGE 00681 - HUNTINGTON RD. (RTE.14) OVER THE MERRICK BROOK

TOWN:
TOWN OF SCOTLAND

DRAWING TITLE:
ROUTE 14 CROSS SECTIONS

PROJECT NO. 0123-0066

DRAWING NO. XSC-02

SHEET NO. 4.21

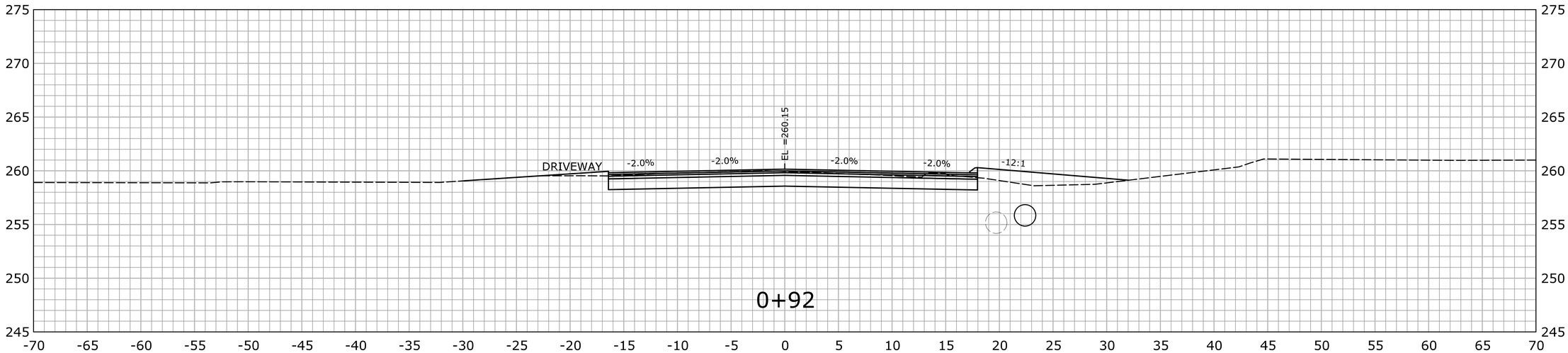

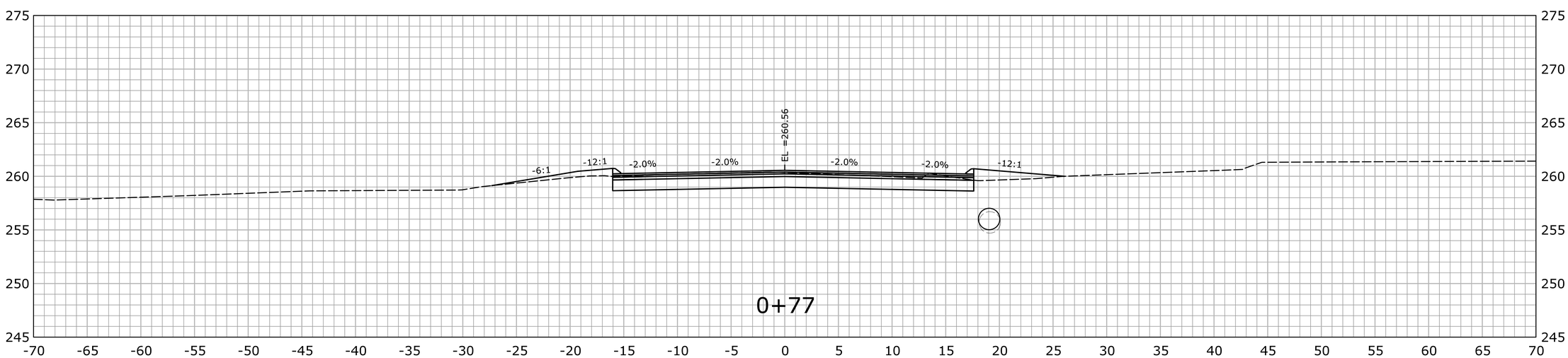

STA.0+77 TO STA.0+92

REV.	DATE	REVISION DESCRIPTION	SHEET NO.

THE INFORMATION, INCLUDING ESTIMATED QUANTITIES OF WORK, SHOWN ON THESE SHEETS IS BASED ON LIMITED INVESTIGATIONS BY THE STATE AND IS IN NO WAY WARRANTED TO INDICATE THE CONDITIONS OF ACTUAL QUANTITIES OF WORK WHICH WILL BE REQUIRED.

Plotted Date: 8/14/2019

DESIGNER/DRAFTER: RF

CHECKED BY: SN

SCALE IN FEET

0 5 10

SCALE 1" = 5'

STATE OF CONNECTICUT
DEPARTMENT OF TRANSPORTATION

Filename: ...\HW_MSH_0123_0066_XSC.dgn

SIGNATURE/ BLOCK:

OFFICE OF ENGINEERING

APPROVED BY:

PROJECT TITLE:

REPLACEMENT OF BRIDGE 00681 - HUNTINGTON RD. (RTE.14) OVER THE MERRICK BROOK

TOWN:

TOWN OF SCOTLAND

DRAWING TITLE:

ROUTE 14 CROSS SECTIONS

PROJECT NO. **0123-0066**

DRAWING NO. **XSC-03**

SHEET NO. **4.22**

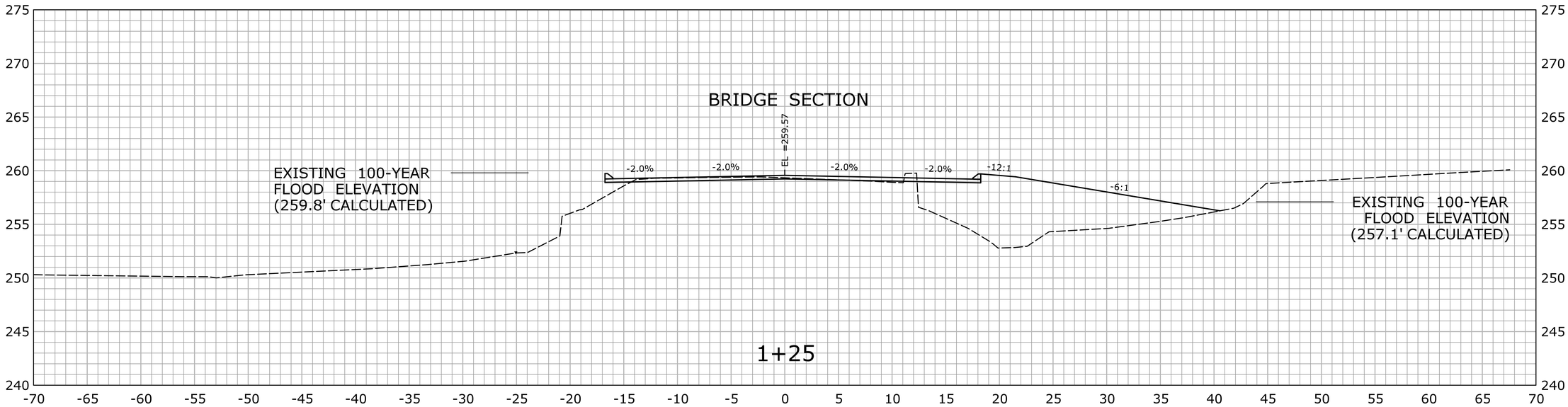

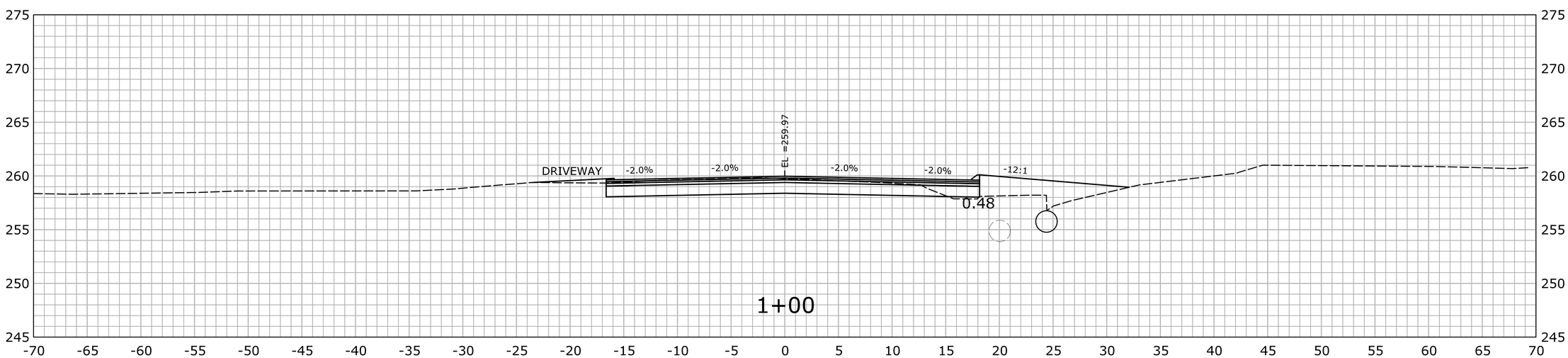

STA.1+00 TO STA.1+25

REV.	DATE	REVISION DESCRIPTION	SHEET NO.

THE INFORMATION, INCLUDING ESTIMATED QUANTITIES OF WORK, SHOWN ON THESE SHEETS IS BASED ON LIMITED INVESTIGATIONS BY THE STATE AND IS IN NO WAY WARRANTED TO INDICATE THE CONDITIONS OF ACTUAL QUANTITIES OF WORK WHICH WILL BE REQUIRED.

Plotted Date: 8/14/2019

DESIGNER/DRAFTER: RF

CHECKED BY: SN

SCALE IN FEET 0 5 10

SCALE 1" = 5'

STATE OF CONNECTICUT
DEPARTMENT OF TRANSPORTATION

Filename: ...\HW_MSH_0123_0066_XSC.dgn

SIGNATURE/ BLOCK:
OFFICE OF ENGINEERING

APPROVED BY:

PROJECT TITLE:
REPLACEMENT OF BRIDGE
00681 - HUNTINGTON RD. (RTE.14)
OVER THE MERRICK BROOK

TOWN:
TOWN OF SCOTLAND

DRAWING TITLE:
ROUTE 14
CROSS SECTIONS

PROJECT NO. 0123-0066

DRAWING NO. XSC-04

SHEET NO. 4.23

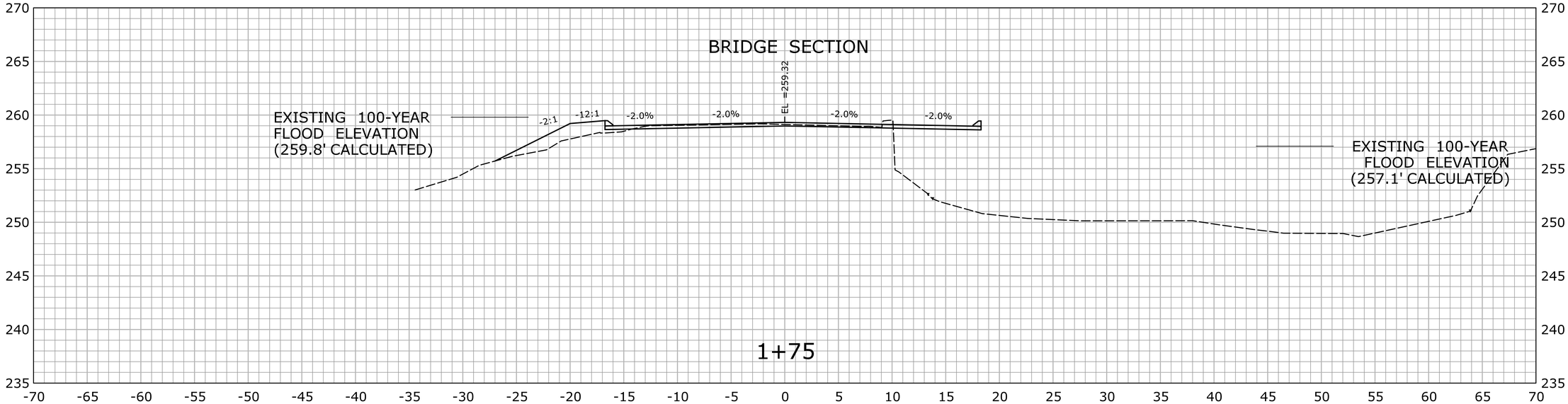

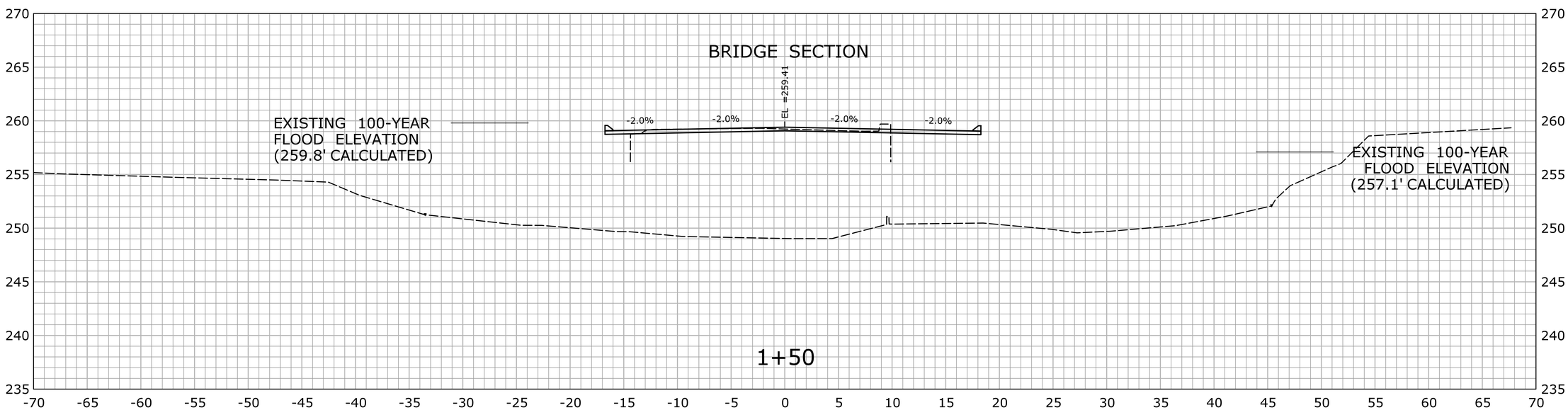

STA.1+50 TO STA.1+75

REV.	DATE	REVISION DESCRIPTION	SHEET NO.

THE INFORMATION, INCLUDING ESTIMATED QUANTITIES OF WORK, SHOWN ON THESE SHEETS IS BASED ON LIMITED INVESTIGATIONS BY THE STATE AND IS IN NO WAY WARRANTED TO INDICATE THE CONDITIONS OF ACTUAL QUANTITIES OF WORK WHICH WILL BE REQUIRED.

Plotted Date: 8/14/2019

DESIGNER/DRAFTER: RF

CHECKED BY: SN

SCALE IN FEET 0 5 10

SCALE 1" = 5'

STATE OF CONNECTICUT
DEPARTMENT OF TRANSPORTATION

Filename: ...\HW_MSH_0123_0066_XSC.dgn

SIGNATURE/BLOCK: OFFICE OF ENGINEERING

APPROVED BY: Matthew Nash

PROJECT TITLE: REPLACEMENT OF BRIDGE 00681 - HUNTINGTON RD. (RTE.14) OVER THE MERRICK BROOK

TOWN: TOWN OF SCOTLAND

DRAWING TITLE: ROUTE 14 CROSS SECTIONS

PROJECT NO. 0123-0066

DRAWING NO. XSC-05

SHEET NO. 4.24

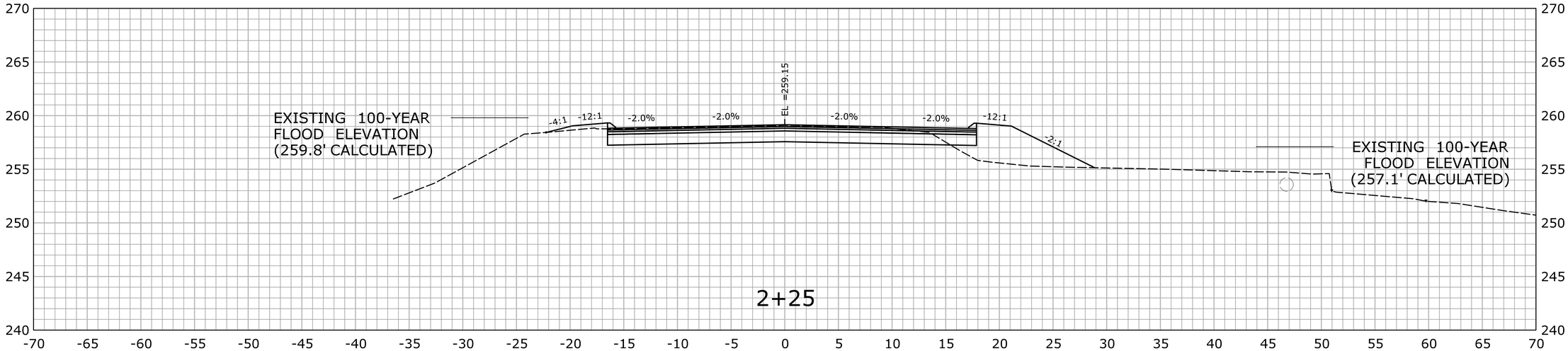

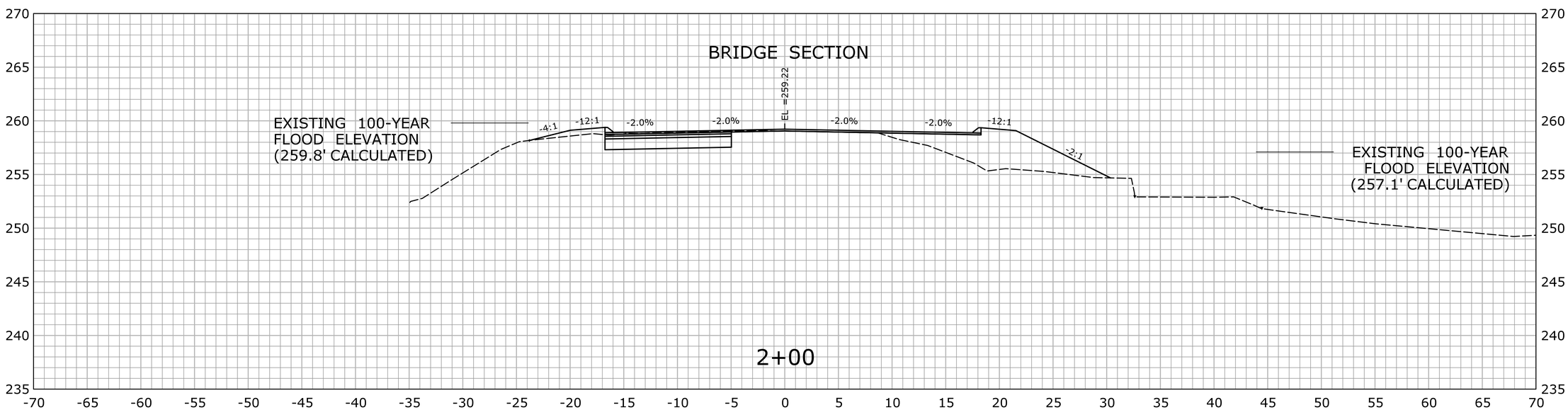

STA.2+00 TO STA.2+25

REV.	DATE	REVISION DESCRIPTION	SHEET NO.

THE INFORMATION, INCLUDING ESTIMATED QUANTITIES OF WORK, SHOWN ON THESE SHEETS IS BASED ON LIMITED INVESTIGATIONS BY THE STATE AND IS IN NO WAY WARRANTED TO INDICATE THE CONDITIONS OF ACTUAL QUANTITIES OF WORK WHICH WILL BE REQUIRED.

Plotted Date: 8/14/2019

DESIGNER/DRAFTER: RF
CHECKED BY: SN
SCALE IN FEET 0 5 10
SCALE 1" = 5'

STATE OF CONNECTICUT
DEPARTMENT OF TRANSPORTATION

Filename: ...\HW_MSH_0123_0066_XSC.dgn

SIGNATURE/BLOCK: OFFICE OF ENGINEERING
APPROVED BY: Matthew Nash

PROJECT TITLE: REPLACEMENT OF BRIDGE 00681 - HUNTINGTON RD. (RTE.14) OVER THE MERRICK BROOK

TOWN: TOWN OF SCOTLAND

DRAWING TITLE: ROUTE 14 CROSS SECTIONS

PROJECT NO. 0123-0066
DRAWING NO. XSC-06
SHEET NO. 4.25

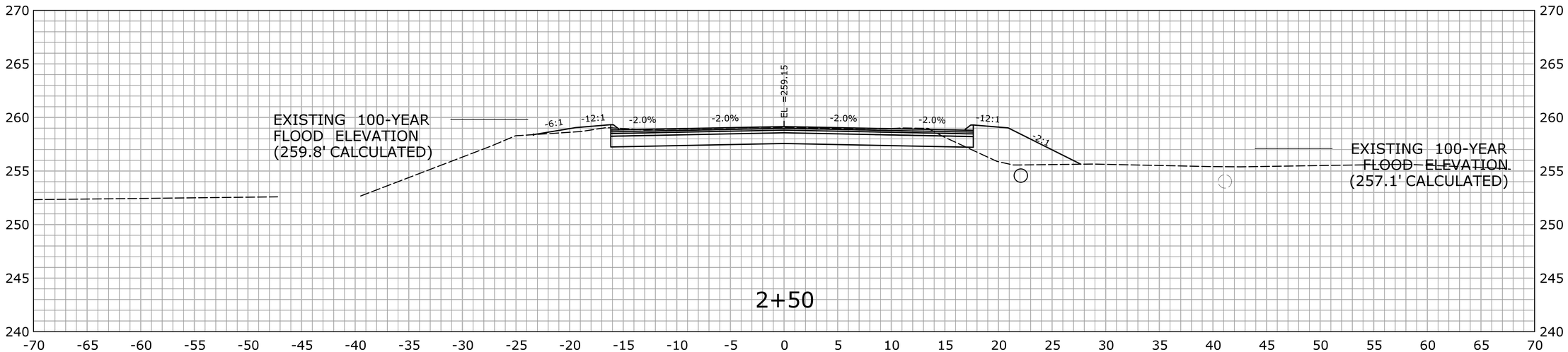

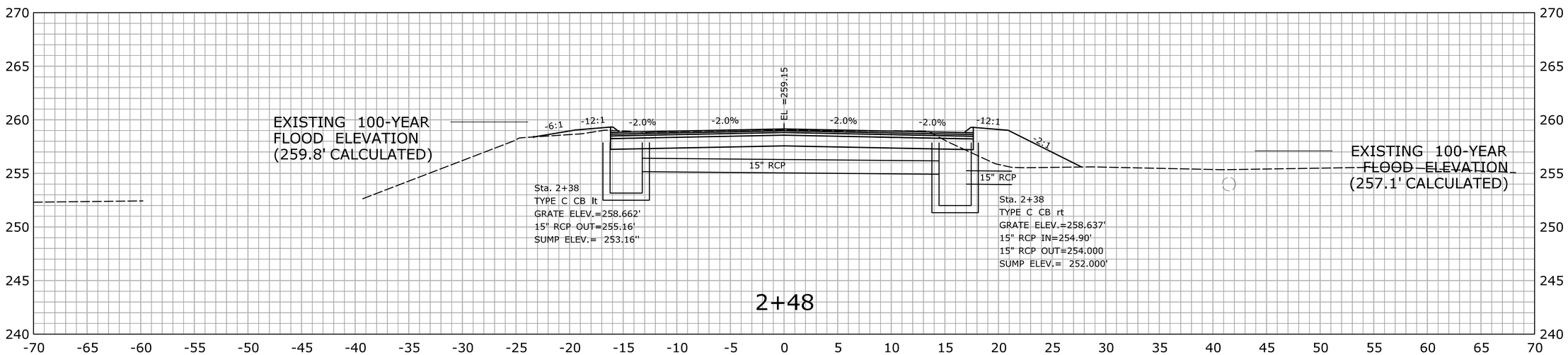

STA.2+48 TO STA.2+50

REV.	DATE	REVISION DESCRIPTION	SHEET NO.

THE INFORMATION, INCLUDING ESTIMATED QUANTITIES OF WORK, SHOWN ON THESE SHEETS IS BASED ON LIMITED INVESTIGATIONS BY THE STATE AND IS IN NO WAY WARRANTED TO INDICATE THE CONDITIONS OF ACTUAL QUANTITIES OF WORK WHICH WILL BE REQUIRED.

Plotted Date: 8/14/2019

DESIGNER/DRAFTER: RF

CHECKED BY: SN

SCALE IN FEET 0 5 10

SCALE 1" = 5'

STATE OF CONNECTICUT
DEPARTMENT OF TRANSPORTATION

Filename: ...\HW_MSH_0123_0066_XSC.dgn

SIGNATURE/ BLOCK:
OFFICE OF ENGINEERING

APPROVED BY:

PROJECT TITLE:
REPLACEMENT OF BRIDGE
00681 - HUNTINGTON RD. (RTE.14)
OVER THE MERRICK BROOK

TOWN:
TOWN OF SCOTLAND

DRAWING TITLE:
ROUTE 14
CROSS SECTIONS

PROJECT NO. 0123-0066

DRAWING NO. XSC-07

SHEET NO. 4.26

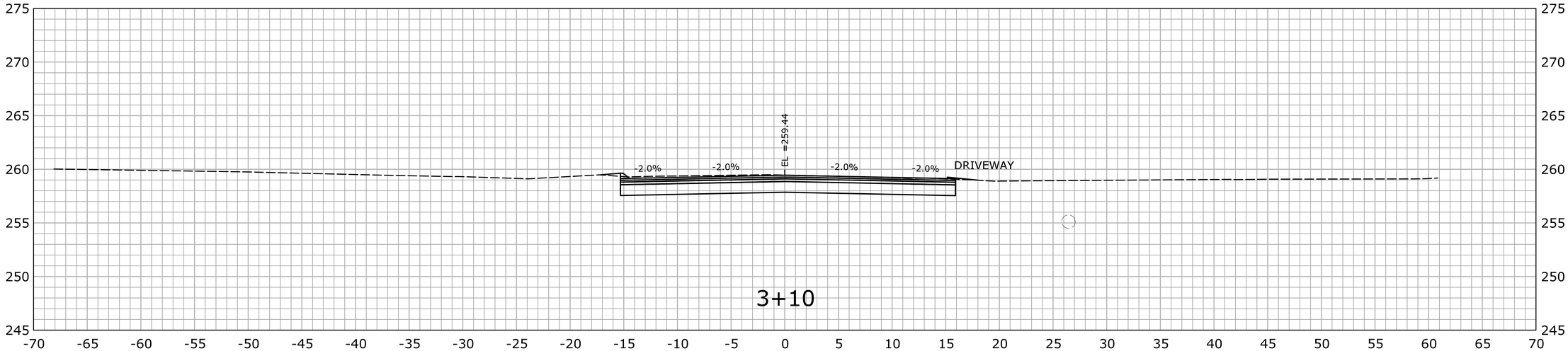

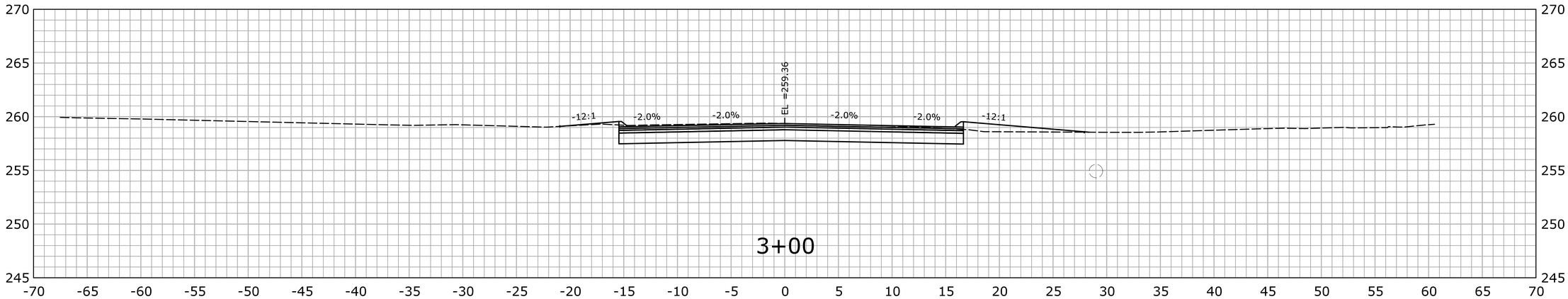

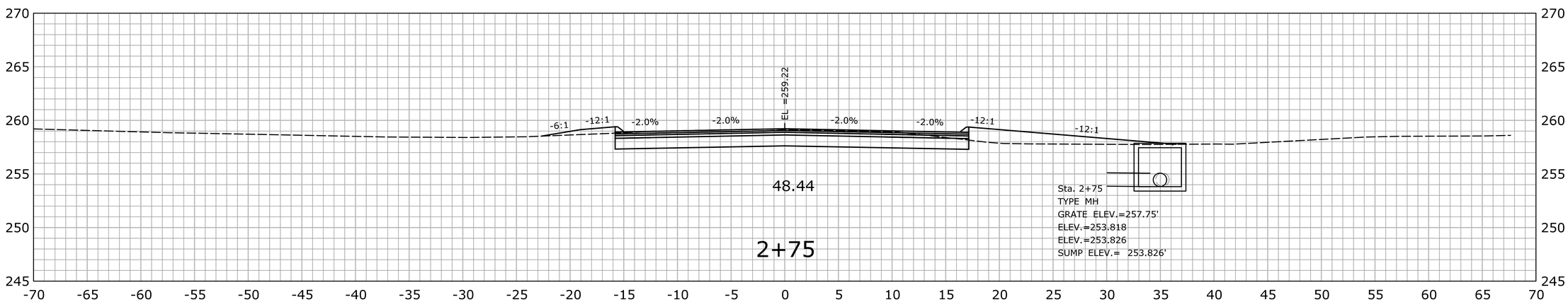

STA.2+75 TO STA.3+10

REV.	DATE	REVISION DESCRIPTION	SHEET NO.

THE INFORMATION, INCLUDING ESTIMATED QUANTITIES OF WORK, SHOWN ON THESE SHEETS IS BASED ON LIMITED INVESTIGATIONS BY THE STATE AND IS IN NO WAY WARRANTED TO INDICATE THE CONDITIONS OF ACTUAL QUANTITIES OF WORK WHICH WILL BE REQUIRED.

Plotted Date: 8/14/2019

DESIGNER/DRAFTER: RF

CHECKED BY: SN

SCALE IN FEET 0 5 10

SCALE 1" = 5'

STATE OF CONNECTICUT
DEPARTMENT OF TRANSPORTATION

Filename: ...\HW_MSH_0123_0066_XSC.dgn

SIGNATURE/ BLOCK:

OFFICE OF ENGINEERING

APPROVED BY:

PROJECT TITLE:

REPLACEMENT OF BRIDGE
00681 - HUNTINGTON RD. (RTE.14)
OVER THE MERRICK BROOK

TOWN: TOWN OF SCOTLAND

DRAWING TITLE: ROUTE 14 CROSS SECTIONS

PROJECT NO. 0123-0066

DRAWING NO. XSC-08

SHEET NO. 4.27

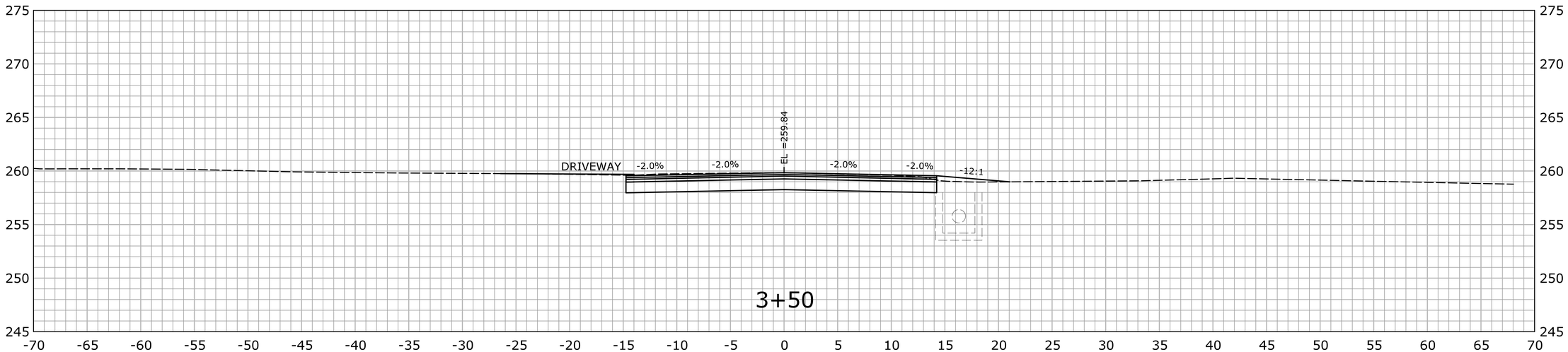

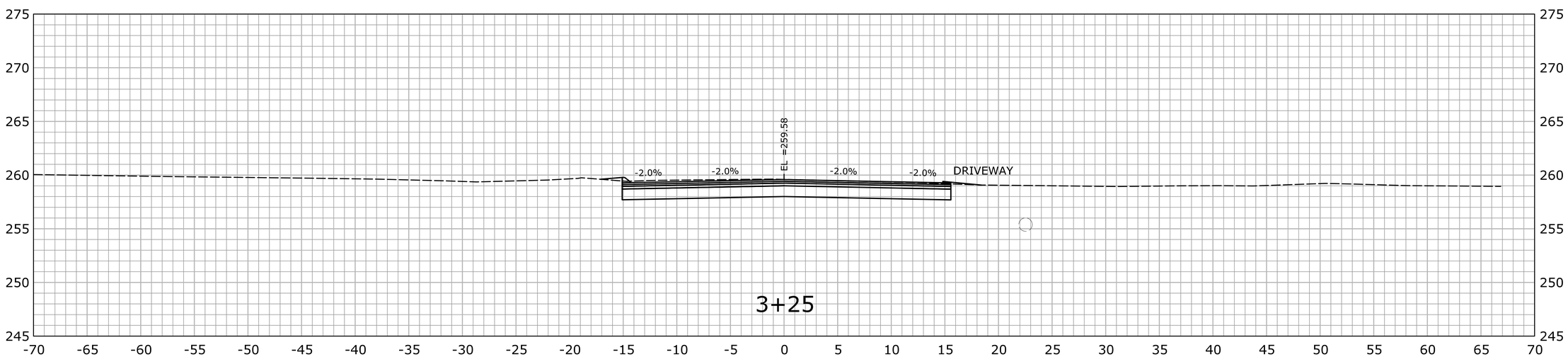

STA.3+25 TO STA.3+50

REV.	DATE	REVISION DESCRIPTION	SHEET NO.

THE INFORMATION, INCLUDING ESTIMATED QUANTITIES OF WORK, SHOWN ON THESE SHEETS IS BASED ON LIMITED INVESTIGATIONS BY THE STATE AND IS IN NO WAY WARRANTED TO INDICATE THE CONDITIONS OF ACTUAL QUANTITIES OF WORK WHICH WILL BE REQUIRED.

Plotted Date: 8/14/2019

DESIGNER/DRAFTER: RF

CHECKED BY: SN

SCALE IN FEET 0 5 10

SCALE 1" = 5'

STATE OF CONNECTICUT
DEPARTMENT OF TRANSPORTATION

Filename: ...\HW_MSH_0123_0066_XSC.dgn

SIGNATURE/ BLOCK:

OFFICE OF ENGINEERING

APPROVED BY:

PROJECT TITLE:

REPLACEMENT OF BRIDGE
00681 - HUNTINGTON RD. (RTE.14)
OVER THE MERRICK BROOK

TOWN: TOWN OF SCOTLAND

DRAWING TITLE: ROUTE 14 CROSS SECTIONS

PROJECT NO. 0123-0066

DRAWING NO. XSC-09

SHEET NO. 4.28

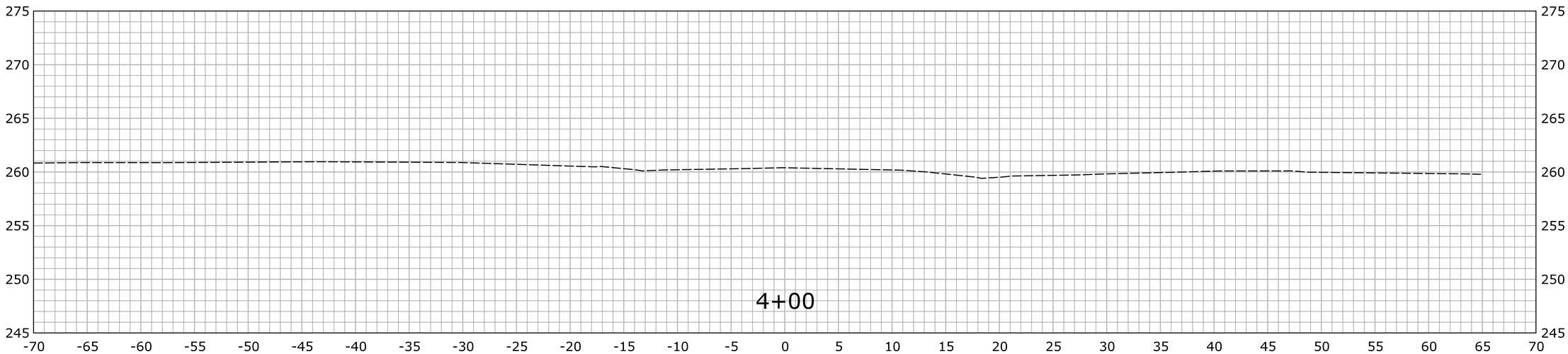

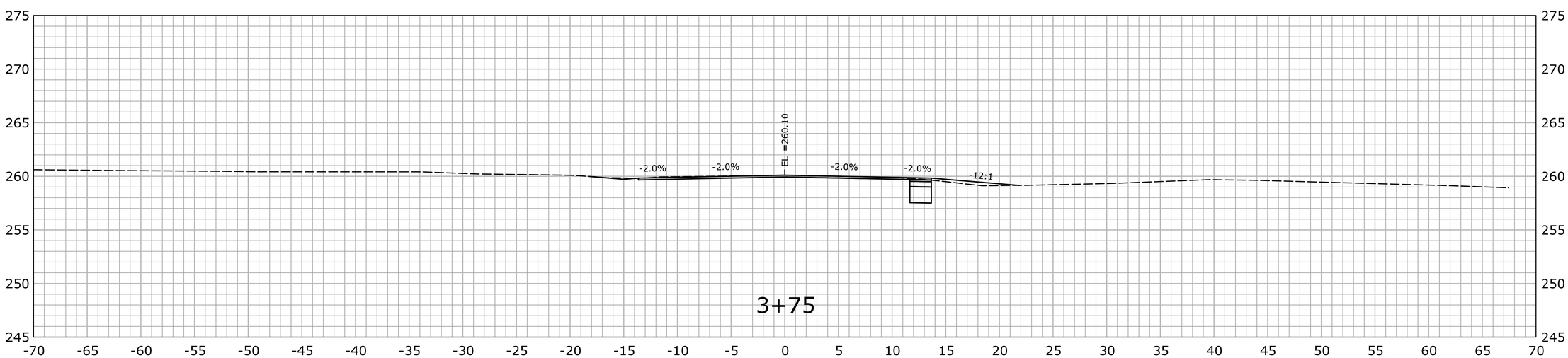

STA.3+75 TO STA.4+00

REV.	DATE	REVISION DESCRIPTION	SHEET NO.

THE INFORMATION, INCLUDING ESTIMATED QUANTITIES OF WORK, SHOWN ON THESE SHEETS IS BASED ON LIMITED INVESTIGATIONS BY THE STATE AND IS IN NO WAY WARRANTED TO INDICATE THE CONDITIONS OF ACTUAL QUANTITIES OF WORK WHICH WILL BE REQUIRED.

Plotted Date: 8/14/2019

DESIGNER/DRAFTER: RF

CHECKED BY: SN

SCALE IN FEET 0 5 10

SCALE 1" = 5'

STATE OF CONNECTICUT
DEPARTMENT OF TRANSPORTATION

Filename: ...\HW_MSH_0123_0066_XSC.dgn

SIGNATURE/ BLOCK:

OFFICE OF ENGINEERING

APPROVED BY:

Matthew Ford

PROJECT TITLE:

REPLACEMENT OF BRIDGE
00681 - HUNTINGTON RD. (RTE.14)
OVER THE MERRICK BROOK

TOWN:

TOWN OF SCOTLAND

DRAWING TITLE:

ROUTE 14
CROSS SECTIONS

PROJECT NO. 0123-0066

DRAWING NO. XSC-10

SHEET NO. 4.29