SUBSET 03

INDEX OF DRAWINGS

DRAWING NUMBER	DRAWING TITLE	DRAWING NUMBER	DRAWING TITLE
S-01	INDEX OF DRAWINGS	S-21	DECK UNIT DETAILS - 1
S-02	GENERAL PLAN	S-22	DECK UNIT DETAILS - 2
S-03	GENERAL NOTES	S-23	DECK UNIT DETAILS - 3
S-04	GRADING PLAN	S-24	DECK PLAN
S-05	BORING LOGS - 1	S-25	DECK CROSS SECTION AND DECK DETAILS
S-06	BORING LOGS - 2	S-26	APPROACH SLAB DETAILS
S-07	LAYOUT PLAN	S-27	PARAPET DETAILS
S-08	WATER HANDLING PLAN	S-28	PARAPET REINFORCEMENT DETAILS
S-09	CONSTRUCTION SEQUENCE 1	ROW-1	ROW IMPACT PLAN
S-10	CONSTRUCTION SEQUENCE 2		
S-11	CONSTRUCTION SEQUENCE 3		
S-12	PILE PLAN AND DETAILS		
S-13	ABUTMENT & WINGWALL PLANS AND ELEVATIONS		
S-14	ABUTMENT 1 REINFORCEMENT DETAILS		
S-15	ABUTMENT 2 REINFORCEMENT DETAILS		
S-16	ABUTMENT DETAILS		
S-17	WINGWALL DETAILS		
S-18	WINGWALL REINFORCEMENT DETAILS		
S-19	POUR SEQUENCE		
S-20	FRAMING PLAN		

THE DESIGN APPEARS TO CONFORM TO APPLICABLE CRITERIA. APPROVAL IS NOT TO BE CONSTRUED TO MEAN THAT ALL ASPECTS OF THE DESIGN HAVE BEEN PERSONALLY CHECKED BY THE UNDERSIGNED.

TRANSPORTATION PRINCIPAL ENGINEER

REV.	DATE	REVISION DESCRIPTION	SHEET NO.

THE INFORMATION, INCLUDING ESTIMATED QUANTITIES OF WORK, SHOWN ON THESE SHEETS IS BASED ON LIMITED INVESTIGATIONS BY THE STATE AND IS IN NO WAY WARRANTED TO INDICATE THE CONDITIONS OF ACTUAL QUANTITIES OF WORK WHICH WILL BE REQUIRED.

Plotted Date: 8/13/2019

DESIGNER/DRAFTER: SPM

CHECKED BY: RIB

SCALE AS NOTED

STATE OF CONNECTICUT
DEPARTMENT OF TRANSPORTATION

Filename: ...\MSta_Sheet_Files\01_Index.dgn

SIGNATURE/ BLOCK:

OFFICE OF ENGINEERING

APPROVED BY:

PROJECT TITLE:

REPLACEMENT OF BR. NO. 00681 - HUNTINGTON RD. (RTE. 14) OVER MERRICK BROOK

TOWN: **SCOTLAND**

DRAWING TITLE: **INDEX OF DRAWINGS**

PROJECT NO. **123-066**

DRAWING NO. **S-01**

SHEET NO. **03.01**

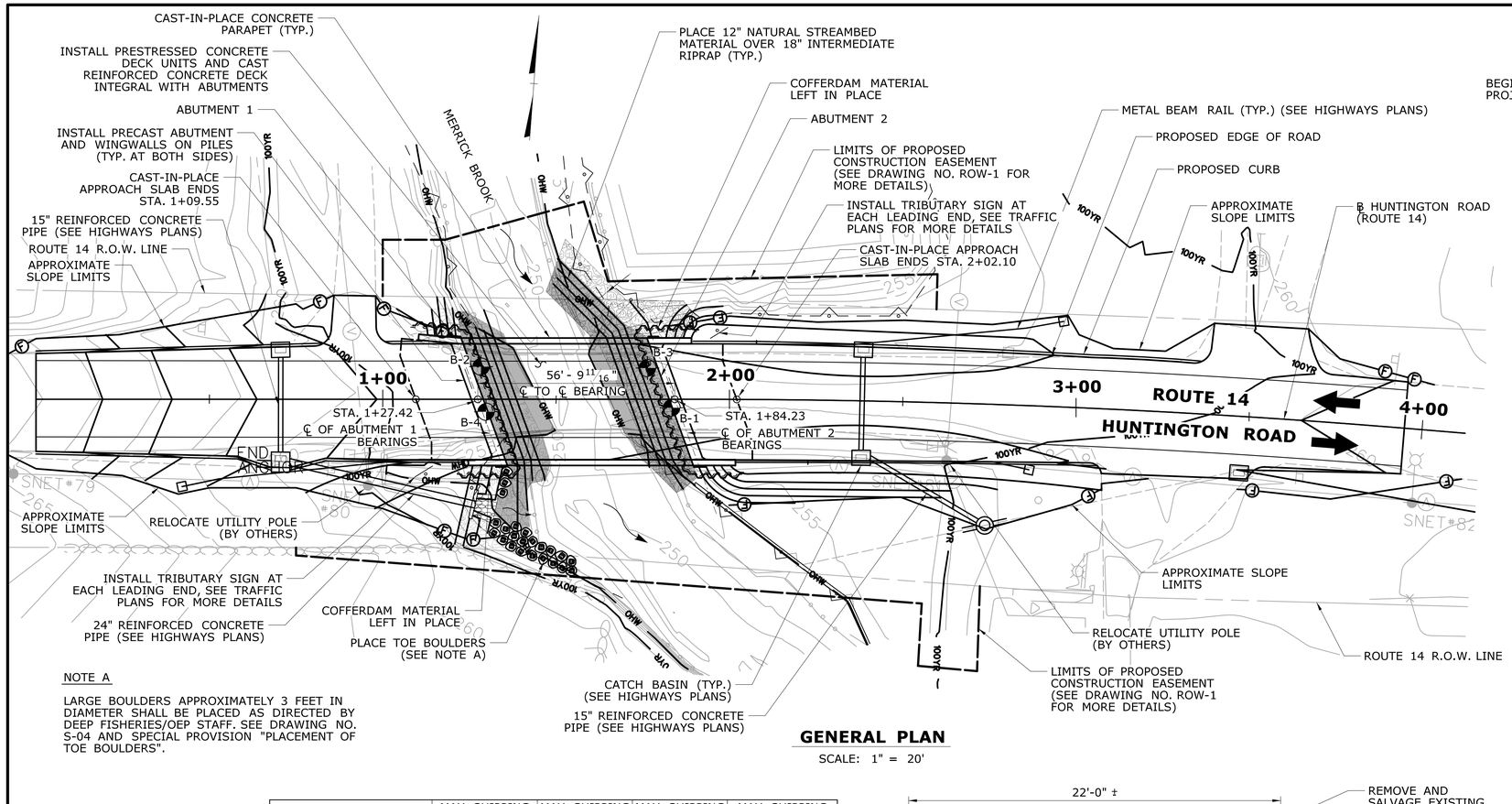

NOTE A

LARGE BOULDERS APPROXIMATELY 3 FEET IN DIAMETER SHALL BE PLACED AS DIRECTED BY DEEP FISHERIES/OEP STAFF. SEE DRAWING NO. S-04 AND SPECIAL PROVISION "PLACEMENT OF TOE BOULDERS".

GENERAL PLAN

SCALE: 1" = 20'

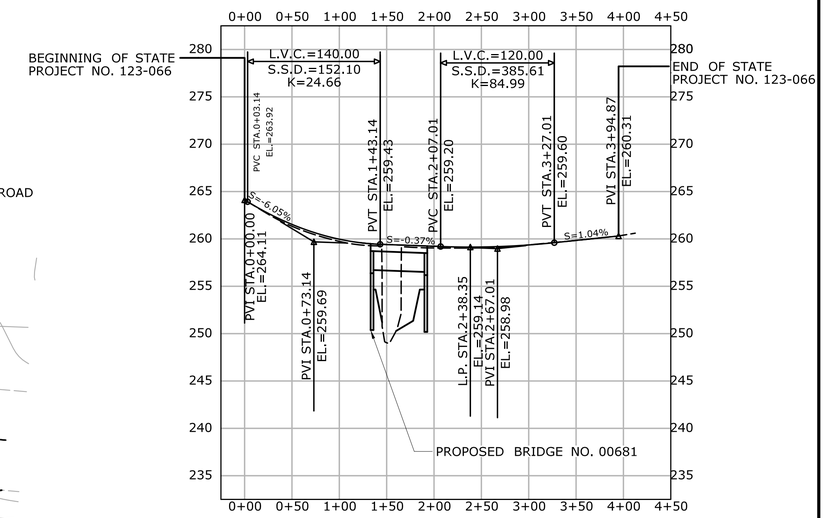

ROADWAY PROFILE

VERTICAL SCALE: 1/8" = 1'-0"
HORIZONTAL SCALE: 1" = 80'

DESCRIPTION OF WORK

01. CONTROL AND REMOVAL OF INVASIVE VEGETATION.
02. CLEARING AND GRUBBING AND INSTALLATION OF SEDIMENTATION CONTROL SYSTEM.
03. RELOCATE UTILITY POLES TO TEMPORARY LOCATIONS (BY OTHERS).
04. INSTALL DRAINAGE PIPES AND CATCH BASINS.
05. INSTALL PILES AND TEST PRODUCTION PILES.
06. CLOSE ROAD AND DETOUR TRAFFIC.
07. REMOVE AND SALVAGE EXISTING METAL BEAM RAIL POSTS.
08. REMOVE EXISTING SUPERSTRUCTURE.
09. INSTALL FULLY ENCLOSED COFFERDAM AROUND PILES. INSTALL DEWATERING BASINS AND EXCAVATE.
10. PLACE 1' GRANULAR FILL.
11. INSTALL PRECAST ABUTMENTS AND WINGWALLS. BACKFILL AS NEEDED.
12. INSTALL TEMPORARY WATER HANDLING.
13. REMOVE EXISTING ABUTMENTS AND WINGWALLS TO EL. 249.0 AND REMOVE PORTION OF EXISTING RETAINING WALL.
14. PLACE RIPRAP AND TOE BOULDERS.
15. REMOVE TEMPORARY WATER HANDLING.
16. INSTALL PRESTRESSED DECK UNITS AND POST-TENSION.
17. CONSTRUCT CIP CONCRETE DECK SLAB, APPROACH SLABS, AND PARAPETS.
18. APPLY WATERPROOFING MEMBRANE AND INSTALL HMA OVERLAY ON BRIDGE AND APPROACHES. APPLY TEMPORARY PAVEMENT MARKINGS.
19. INSTALL APPROACH METAL BEAM RAILS.
20. OPEN ROADWAY TO TRAFFIC.
21. RELOCATE UTILITY POLES TO PERMANENT LOCATIONS (BY OTHERS).
22. PLACE TOPSOIL, LANDSCAPE, AND ESTABLISH TURF.
23. INSTALL PERMANENT PAVEMENT MARKINGS.
24. REMOVE EROSION AND SEDIMENTATION CONTROL SYSTEM UPON PERMANENT STABILIZATION.

MEMBER	MAX. SHIPPING LENGTH	MAX. SHIPPING HEIGHT	MAX. SHIPPING WIDTH	MAX. SHIPPING WEIGHT
PRESTRESSED DECK UNITS - B1 & B12	58'-0"	2'-3"	3'-0"	43,209 LBS
PRESTRESSED DECK UNITS - B2 THRU B11	58'-0"	2'-3"	3'-0"	34,704 LBS
ABUTMENT STEM	10'-3"	5'-10"	3'-3"	25,795 LBS
ABUTMENT STEM WITH WINGWALL	14'-5"	5'-10"	7'-4"	26,221 LBS

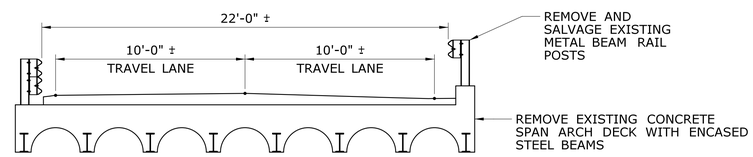

EXISTING SECTION

SCALE: 1/4" = 1'-0"

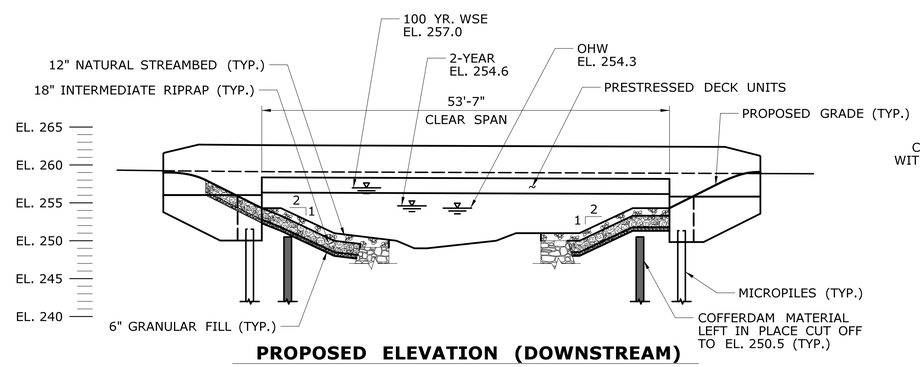

PROPOSED ELEVATION (DOWNSTREAM)

SCALE: 1" = 10'

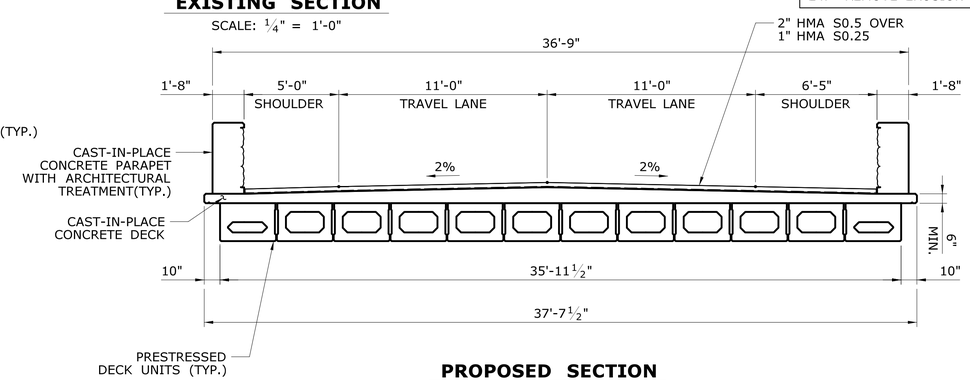

PROPOSED SECTION

SCALE: 1/4" = 1'-0"

HYDRAULIC DATA

DRAINAGE AREA	8.4 SQ. MI.
DRAINAGE FREQUENCY	100 YEAR
DESIGN DISCHARGE	1690 CFS
AVERAGE DAILY FLOW ELEVATION	252.8 FT
UPSTREAM DESIGN WATER SURFACE ELEVATION	257.8 FT
MAXIMUM SCOUR ELEVATION	238.5 FT
FREQUENCY	230 YEAR
DISCHARGE	2105 CFS
WORST CASE SCOUR SUBSTRUCTURE UNIT	EAST ABUT.

REV.	DATE	REVISION DESCRIPTION	SHEET NO.

THE INFORMATION, INCLUDING ESTIMATED QUANTITIES OF WORK, SHOWN ON THESE SHEETS IS BASED ON LIMITED INVESTIGATIONS BY THE STATE AND IS IN NO WAY WARRANTED TO INDICATE THE CONDITIONS OF ACTUAL QUANTITIES OF WORK WHICH WILL BE REQUIRED.

Plotted Date: 8/22/2019

DESIGNER/DRAFTER: SPM
CHECKED BY: RIB
SCALE AS NOTED

STATE OF CONNECTICUT
DEPARTMENT OF TRANSPORTATION

Filename: ...\02_General Plan.dgn

SIGNATURE/BLOCK: OFFICE OF ENGINEERING
APPROVED BY: Mary E. Cook

PROJECT TITLE: REPLACEMENT OF BR. NO. 00681 - HUNTINGTON RD. (RTE 14) OVER MERRICK BROOK

TOWN: SCOTLAND

DRAWING TITLE: GENERAL PLAN

PROJECT NO. 123-066
DRAWING NO. S-02
SHEET NO. 03.02

GENERAL NOTES

SPECIFICATIONS: CONNECTICUT DEPARTMENT OF TRANSPORTATION FORM 817 (2016), SUPPLEMENTAL SPECIFICATIONS THERETO DATED JULY 2018 AND SPECIAL PROVISIONS.

DESIGN SPECIFICATIONS: AASHTO LRFD BRIDGE DESIGN SPECIFICATIONS 8TH EDITION (2017), WITH LATEST INTERIM SPECIFICATIONS AS SUPPLEMENTED BY THE CONNECTICUT DEPARTMENT OF TRANSPORTATION BRIDGE DESIGN MANUAL (2003).

MATERIAL STRENGTHS:

CONCRETE:
CLASS PCC05560 BASED ON f'c = 5000 PSI
CLASS PCC04462 BASED ON f'c = 4000 PSI
CLASS PCC04460 BASED ON f'c = 4000 PSI
PRESTRESSED CONCRETE BASED ON f'c = 10000 PSI AND f'ci = 6000PSI

REINFORCEMENT:
ASTM A615, GRADE 60 Fy = 60 KSI
PRESTRESSING STRANDS: 270 KSI

THE SPECIFIED CONCRETE STRENGTH USED IN DESIGN, f'c, OF THE CONCRETE COMPONENTS IS NOTED ABOVE. THE MINIMUM COMPRESSIVE STRENGTH OF THE CONCRETE IN THE CONSTRUCTED COMPONENTS SHALL CONFORM TO THE REQUIREMENTS OF 'SECTION 6.01 CONCRETE FOR STRUCTURES' AND 'SECTION M.03 PORTLAND CEMENT CONCRETE' FOR THE CLASS OF CONCRETE SPECIFIED.

LIVE LOAD: HL 93, LEGAL, AND PERMIT VEHICLES.

FUTURE PAVING ALLOWANCE: NONE

BITUMINOUS CONCRETE OVERLAY: OVERLAY ON THE BRIDGE SHALL HAVE A BASE LIFT OF 1" OF HMA S0.25 TRAFFIC LEVEL 2. THE FINAL LIFT SHALL BE 2" OF HMA S0.5 TRAFFIC LEVEL 2. IF PAVEMENT WEDGES ARE NEEDED TO ADJUST PROFILE AND CROSS SLOPE, 0"-1.5" HMA S0.25 TRAFFIC LEVEL 2 SHALL BE PLACED BETWEEN THE BASE AND THE FINAL LIFT.

MEMBRANE WATERPROOFING (COLD LIQUID ELASTOMERIC): COLD LIQUID ELASTOMERIC SHALL BE PLACED ON THE BRIDGE DECK AFTER THEY HAVE BEEN POURED AND CURED. THE COLD LIQUID ELASTOMERIC SHALL EXTEND 2"± UP THE CURBS.

FOUNDATION PRESSURES: THE LIMIT STATES NOTED ON THE SUBSTRUCTURE PLAN SHEETS REFER TO THE LIMIT STATES AS GIVEN IN THE AASHTO LRFD BRIDGE DESIGN SPECIFICATIONS.

DIMENSIONS AND ELEVATIONS: ALL DIMENSIONS ARE GIVEN IN FEET UNLESS OTHERWISE NOTED. ALL ELEVATIONS ARE GIVEN IN FEET. WHEN DECIMAL DIMENSIONS OR ELEVATIONS ARE GIVEN TO LESS THAN THREE DECIMAL PLACES, THE OMITTED DIGITS SHALL BE ASSUMED TO BE ZEROS.

EXISTING DIMENSIONS: DIMENSIONS OF THE EXISTING STRUCTURE ARE INCLUDED FOR GENERAL REFERENCE ONLY AND MAY NOT DEPICT AS-BUILT CONDITIONS NOR ALL MODIFICATIONS MADE SINCE ORIGINAL CONSTRUCTION. THE CONTRACTOR SHALL TAKE ALL FIELD MEASUREMENTS NECESSARY TO ASSURE PROPER FIT OF THE FINISHED WORK AND SHALL ASSUME FULL RESPONSIBILITY FOR THEIR ACCURACY.

TRAFFIC: ALL WORK SHALL BE DONE IN ACCORDANCE WITH THE SPECIAL PROVISIONS "MAINTENANCE AND PROTECTION OF TRAFFIC" AND "PROSECUTION AND PROGRESS."

UTILITY RELOCATION: THE CONTRACTOR IS RESPONSIBLE FOR COORDINATING WITH THE RESPECTIVE UTILITY COMPANIES IN ADVANCE OF THE REPLACEMENT OF BRIDGE NO. 00681. THE FOLLOWING UTILITIES ARE LOCATED WITHIN THE PROJECT LIMITS AND SHALL BE PROTECTED DURING CONSTRUCTION: FRONTIER COMMUNICATIONS, CROWN CASTLE FIBER, EVERSOURCE AND CHARTER. THE CONTRACTOR SHALL COORDINATE ALL WORK RELATED TO UTILITY RELOCATION WITH THE RESPECTIVE UTILITY COMPANIES.

SUBSTRUCTURE AND SUPERSTRUCTURE REMOVAL: BEFORE INITIATING CONSTRUCTION, THE CONTRACTOR SHALL SUBMIT A PLAN FOR APPROVAL DEFINING METHOD FOR CONSTRUCTION AND PROTECTION OF DEBRIS FROM FALLING ONTO MERRICK BROOK DURING REMOVAL OF THE EXISTING BRIDGE SUPERSTRUCTURE. COST TO BE INCLUDED FOR PAYMENT UNDER THE ITEMS "REMOVAL OF EXISTING MASONRY" AND "REMOVAL OF SUPERSTRUCTURE"

SALVAGE: THE CONTRACTOR SHALL SALVAGE THE EXISTING METAL BEAM RAIL POSTS ON THE BRIDGE AND APPROACHES.

BRIDGE IDENTIFICATION PLACARDS: THE CONTRACTOR SHALL PROVIDE AND INSTALL NEW BRIDGE IDENTIFICATION SIGNS AT THE LEADING END OF EACH BRIDGE PARAPET. THE SIGNS SHALL BE FABRICATED WITH 40 GAUGE ALUMINUM SHEET METAL. THE SIGNS SHALL BE 4" X 12" WITH 3" WHITE RETROREFLECTIVE BLOCK LETTERS ON GREEN RETROREFLECTIVE SHEETING. EACH SIGN SHALL READ: 00681. ALL COSTS ASSOCIATED WITH PROVIDING AND INSTALLING THE BRIDGE SIGNS SHALL BE COVERED UNDER THE ITEM "SIGN FACE - SHEET ALUMINUM (TYPE IX RETROREFLECTIVE SHEETING)". THE FINAL LOCATION AND ATTACHMENT METHOD FOR THE SIGNS SHALL BE APPROVED BY THE ENGINEER PRIOR TO INSTALLATION.

DETOUR NOTES

1. PRESTRESSED DECK UNIT SHALL BE CURED MINIMUM 28 DAYS BEFORE THE DETOUR IS INITIATED.
2. ALL SUBMITTALS REQUIRE FINAL APPROVAL BEFORE THE DETOUR IS INITIATED.
3. ALL PRECAST SUBSTRUCTURE ELEMENTS SHALL BE CAST AND APPROVED BEFORE THE DETOUR IS INITIATED.
4. ALL MATERIALS NEEDED FOR THE PROJECT SHALL BE ONSITE BEFORE THE DETOUR IS INITIATED.
5. THE CONTRACTOR SHALL INSTALL TEMPORARY PRECAST CONCRETE BARRIER CURB ACROSS ROUTE 14 TO PREVENT PEDESTRIAN ACCESS TO CONSTRUCTION AREA. THE BARRIER SHALL REMAIN IN PLACE AT ALL TIMES THROUGHOUT THE DETOUR.

CONCRETE NOTES

EXPOSED CONCRETE EDGES: EXPOSED EDGES OF CONCRETE SHALL BE BEVELED 1" X 1", UNLESS DIMENSIONED OTHERWISE.

CONCRETE COVER: ALL REINFORCEMENT SHALL HAVE 2" MINIMUM COVER, UNLESS DIMENSIONED OTHERWISE.

REMAIN-IN-PLACE FORMS: THE USE OF REMAIN-IN-PLACE FORMS ON THIS STRUCTURE IS NOT ALLOWED.

COMPOSITE CONSTRUCTION: NO TEMPORARY INTERMEDIATE SUPPORTS SHALL BE USED PRIOR TO AND DURING THE PLACING AND SETTING OF THE CONCRETE DECK SLAB. CONSTRUCTION LOADS AND DEAD LOADS WILL BE PERMITTED WHEN THE CONCRETE HAS REACHED A STRENGTH OF F'C=3500 PSI. LIVE LOADS (TRAFFIC) WILL BE PERMITTED ON THE STRUCTURE AFTER THE CONCRETE HAS REACHED A STRENGTH OF F'C=4000 PSI.

THE CONCRETE FOR THE PRESTRESSED DECK UNITS: THE CONCRETE MIX FOR THE DECK UNITS SHALL ATTAIN A MINIMUM 28 DAY COMPRESSIVE STRENGTH OF F'c = 10.0 KSI. SEE PRESTRESSED DECK UNITS NOTES ON THE PLANS FOR REQUIREMENTS.

THE FOLLOWING PAY ITEMS AND CONCRETE CLASSES ARE REQUIRED FOR PRECAST BRIDGE COMPONENTS:

ITEM NAME	BRIDGE COMPONENTS	PCC CLASS
PRECAST SUBSTRUCTURE ELEMENTS	ABUTMENT STEMS AND WINGWALLS STEMS	PCC05560

THE FOLLOWING PAY ITEMS AND CONCRETE CLASSES ARE REQUIRED FOR CAST-IN-PLACE BRIDGE COMPONENTS:

ITEM NAME	BRIDGE COMPONENTS	PCC CLASS
BRIDGE DECK CONCRETE	BRIDGE DECK AND BACKWALL	PCC04462
PARAPET CONCRETE	BRIDGE AND WINGWALL PARAPETS	PCC04462
APPROACH SLAB CONCRETE	APPROACH SLABS	PCC04460
PRECAST SUBSTRUCTURE ELEMENTS	ABUTMENT STEM VOIDS	PCC05560
ABUTMENT AND WALL CONCRETE	CAST-IN-PLACE WINGWALLS	PCC05560

REINFORCEMENT: ALL STEEL REINFORCING BARS IN CAST-IN-PLACE BRIDGE DECK SLAB, PARAPETS AND APPROACH SLAB AND PRECAST ABUTMENT STEMS AND WINGWALL STEMS SHALL CONFORM TO ASTM A615 GRADE 60 AND SHALL BE GALVANIZED IN ACCORDANCE WITH ASTM A767, CLASS 1.

SEE STEEL REINFORCEMENT NOTES FOR CAST-IN-PLACE, PRECAST AND PRESTRESSED CONCRETE COMPONENTS ON THE PLANS.

CONSTRUCTION JOINTS: CONSTRUCTION JOINTS OTHER THAN THOSE SHOWN ON THE PLANS, WILL NOT BE PERMITTED WITHOUT THE PRIOR APPROVAL OF THE ENGINEER. THE SURFACES BETWEEN THE NEW AND EXISTING CONCRETE SHALL BE FREE OF LOOSE MATERIAL, UNSOUND CONCRETE, AND FOREIGN MATERIAL. THE SURFACES SHALL BE CLEANED TO THE SATISFACTION OF THE ENGINEER AND SHALL BE DAMPENED WITH WATER JUST PRIOR TO PLACING THE CONCRETE.

NOTICE TO BRIDGE INSPECTORS

THE DEPARTMENT'S BRIDGE SAFETY PROCEDURES REQUIRE THIS BRIDGE TO BE INSPECTED FOR, BUT NOT LIMITED TO, ALL APPROPRIATE COMPONENTS INDICATED IN THE GOVERNING MANUALS FOR BRIDGE INSPECTION. ATTENTION MUST BE GIVEN TO INSPECTING THE FOLLOWING SPECIAL COMPONENTS AND DETAILS. (THE LISTING FOR COMPONENTS FOR SPECIFIC ATTENTION SHALL NOT BE CONSTRUED TO REDUCE THE IMPORTANCE OF INSPECTION OF ANY OTHER COMPONENT OF THE STRUCTURE). THE FREQUENCY OF INSPECTION OF THIS STRUCTURE SHALL BE IN ACCORDANCE WITH THE GOVERNING MANUALS FOR BRIDGE INSPECTION, UNLESS OTHERWISE DIRECTED BY THE MANAGER OF BRIDGE SAFETY AND EVALUATION.

COMPONENT OR DETAIL	BRIDGE SHEET REFERENCE
FOLLOW NORMAL INSPECTION PROCEDURES	-

CONCRETE DISTRIBUTION

SUPERSTRUCTURE	C.Y.	157
SUBSTRUCTURE	C.Y.	8
FOOTING	C.Y.	N/A

INSPECTION OF FIELD WELDS

METHOD	UNIT	AMOUNT
ULTRASONIC	IN.	-
MAGNETIC PARTICLE	L.F.	-

SUGGESTED SEQUENCE OF CONSTRUCTION

PRIOR TO ROAD CLOSURE:

1. CLEARING AND GRUBBING AND REMOVAL OF INVASIVE VEGETATION
2. INSTALL SEDIMENTATION CONTROL SYSTEM.
3. RELOCATE UTILITY POLES TO TEMPORARY LOCATIONS (BY OTHERS).
4. INSTALL DRAINAGE PIPES AND CATCH BASINS.
5. INSTALL PILES AND TEST PRODUCTION PILES.

DURING ROAD CLOSURE:

1. CLOSE ROAD TO ALL TRAFFIC.
2. REMOVE AND SALVAGE EXISTING METAL BEAM RAIL ON BRIDGE AND APPROACHES.
3. INSTALL DEBRIS SHIELD.
4. REMOVE EXISTING CONCRETE SPAN ARCH DECK WITH ENCASED STEEL BEAMS AND CONCRETE CURB.
5. REMOVE ANY APPURTENANCES ATTACHED TO CONCRETE CURB.
6. REMOVE EXISTING HMA OVERLAY AND ROADWAY SUBBASE.
7. INSTALL FULLY ENCLOSED COFFERDAMS AND EXCAVATE INSIDE COFFERDAMS.
8. PLACE GRANULAR FILL AND INSTALL PRECAST ABUTMENTS AND WINGWALLS, CONSTRUCT SHEAR KEYS AND FILL ABUTMENT VOIDS.
9. DAMPPROOF AND BACKFILL PRECAST ABUTMENTS AND WINGWALLS.
10. EXCAVATE BEHIND EXISTING ABUTMENTS.
11. PARTIALLY REMOVE EXISTING ABUTMENT AND WINGWALLS.
12. CONSTRUCT REVETMENTS AND INSTALL RIPRAP.
13. INSTALL ELASTOMERIC BEARINGS AND PRESTRESSED DECK UNITS.
14. FORM DECK, INSTALL REINFORCEMENT AND PLACE CONCRETE DECK.
15. CONSTRUCT CAST-IN-PLACE WINGWALLS AND CONCRETE PARAPETS.
16. DAMPPROOF CAST-IN-PLACE CONCRETE WINGWALLS AND DECK END.
17. CONSTRUCT APPROACH SLABS.
18. CONSTRUCT TEMPORARY APPROACH ROADWAY TO BRIDGE.
19. INSTALL MEMBRANE AND HMA OVERLAY ON BRIDGE AND APPROACH SLABS.
20. GRADE GROUND SURFACE.
21. INSTALL METAL BEAM RAIL ON APPROACHES.
22. INSTALL TEMPORARY PAVEMENT MARKINGS.

FINAL CONSTRUCTION STAGE:

1. REOPEN ROAD TO ALL TRAFFIC.
2. COMPLETE ROADWAY RECONSTRUCTION ON APPROACHES.
3. INSTALL PERMANENT PAVEMENT MARKINGS.
4. RELOCATE UTILITY POLES TO PERMANENT LOCATIONS (BY OTHERS).
5. INSTALL BRIDGE NUMBER PLACARD AND TRIBUTARY SIGN AT EACH LEADING END.
6. REMOVE SEDIMENTATION CONTROL SYSTEM, PLACE TOP SOIL AND TURF ESTABLISHMENT.

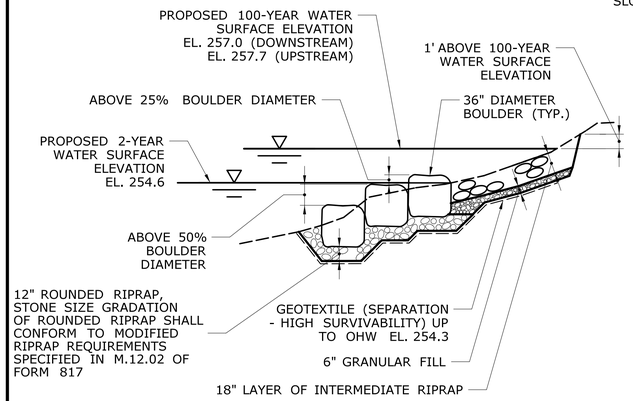

SECTION - BOULDER PLACEMENT

NOT TO SCALE

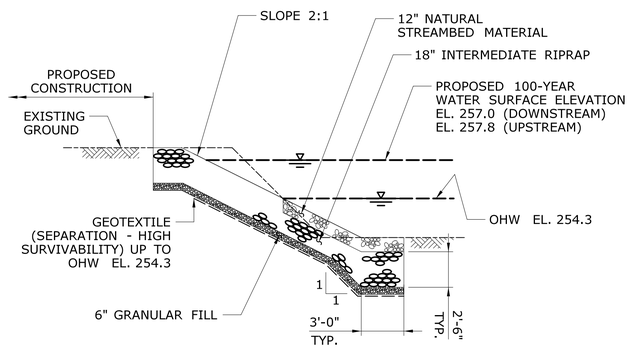

DETAIL - RIPRAP FOR SLOPE PROTECTION

NOT TO SCALE

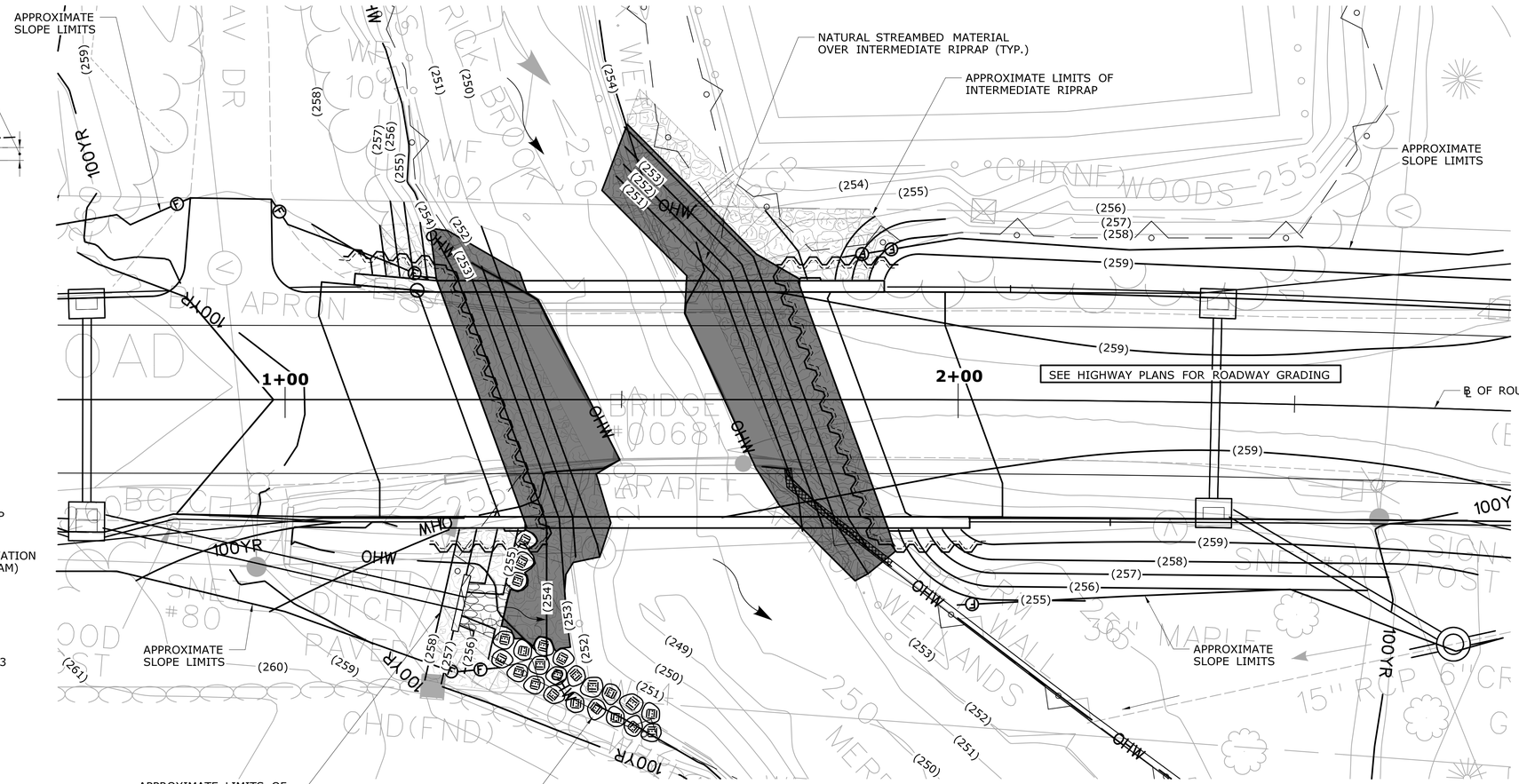

GRADING PLAN

SCALE: 1" = 10'-0"

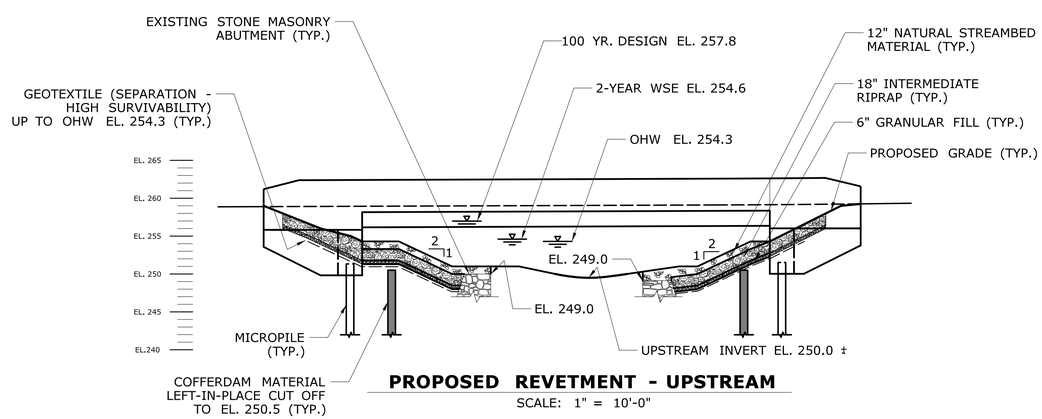

PROPOSED REVETMENT - UPSTREAM

SCALE: 1" = 10'-0"

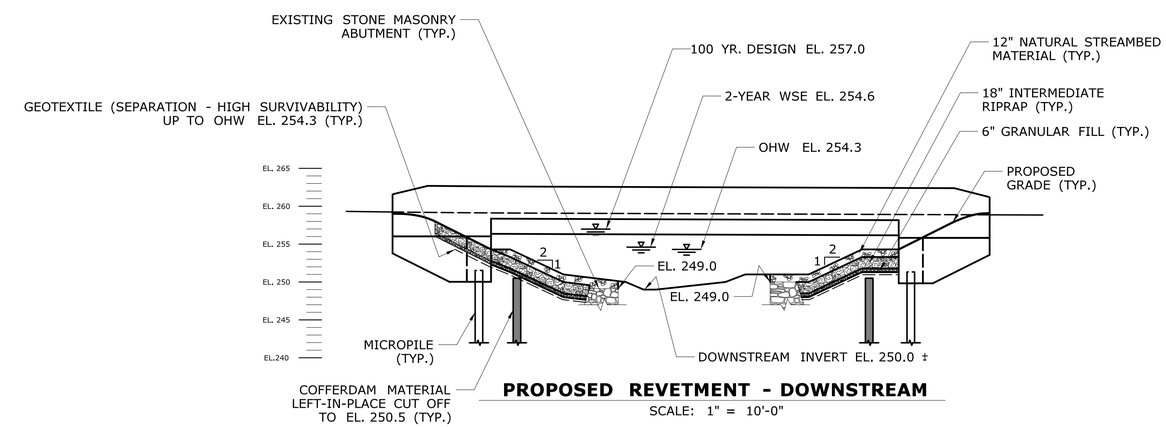

PROPOSED REVETMENT - DOWNSTREAM

SCALE: 1" = 10'-0"

REV.	DATE	REVISION DESCRIPTION	SHEET NO.

THE INFORMATION, INCLUDING ESTIMATED QUANTITIES OF WORK, SHOWN ON THESE SHEETS IS BASED ON LIMITED INVESTIGATIONS BY THE STATE AND IS IN NO WAY WARRANTED TO INDICATE THE CONDITIONS OF ACTUAL QUANTITIES OF WORK WHICH WILL BE REQUIRED.

Plotted Date: 7/23/2019

DESIGNER/DRAFTER: SPM

CHECKED BY: RIB

SCALE AS NOTED

STATE OF CONNECTICUT
DEPARTMENT OF TRANSPORTATION

Filename: ...\04-Grading Plan.dgn

SIGNATURE/BLOCK: OFFICE OF ENGINEERING

APPROVED BY: Mary E. Beck

PROJECT TITLE: REPLACEMENT OF BR. NO. 00681 - HUNTINGTON RD. (RTE 14) OVER MERRICK BROOK

TOWN: SCOTLAND

DRAWING TITLE: GRADING PLAN

PROJECT NO. 123-066

DRAWING NO. S-04

SHEET NO. 03.04

Connecticut DOT Boring Report

Driller: Tyler		Hole No.: B-1	
Inspector: Glenn L. Arzt	Town: Scotland, Connecticut	Stat./Offset: STA. 1+83.31 / 2.43 FT	
Engineer: Luke Arno	Project No.: 0123-0066	Northing: 1181844.702	
Start Date: 6-5-18	Route No.: 14	Easting: 815921.483	
Finish Date: 6-6-18	Bridge No.: 00681	Surface Elevation: 259.11	
Project Description: Replacement of Bridge 00681			
Casing Size/Type: 4" HFJ	Sampler Type/Size: 2"SS	Core Barrel Type: NX2	
Hammer Wt.: Fall: in.	Hammer Wt.: 140 Fall: 30in.		
Groundwater Observations: @6 after 0 hours			

Depth (ft)	Sample Type/No.	Blows on Sampler per 6 inches	Pen. (in.)	Rec. (in.)	RQD %	Generalized Strata Description	Material Description and Notes	Elevation (ft)
0	S-1	8 5 3 8	24	13		PAVEMENT STRUCTURE / MISC FILL	Brown C-F SAND, little F Gravel , tr. Silt	
5	S-2	6 6 1 1	24	2			Brown C-F SAND, little F-M Gravel, tr. Silt	255
10	S-3	35 12 16 15	24	4		GRAVELLY SAND	White/Gray C-F Gravel, some C-F SAND, tr. Silt	250
15	S-4	20 20 18 17	24	0		SAND	No Recovery, Cobbles Present	245
20	S-5	11 14 19 88	24	20			Brown C-F SAND and M-F GRAVEL, tr. Silt	240
25	S-6	24 80/1"	7	4			Brown C-F SAND, some M-F Gravel, tr. Silt	235
	C-1		36	11			Gray medium grained, medium bedded, intensely fractured, moderately weathered and medium strong Gneiss. Core run times: 2, 1.5, 1 minutes.	
30	S-7	13 16 16 15	24	12			Gray/Brown C-F SAND and M-F Gravel, tr. Silt	230
35	S-8	16 14 9 7	24	10		WEATHERED BEDROCK	Gray M-F Gravel, some C-F Sand, tr. Silt	225
40	S-9	50/0"	0	0			No Recovery	220
	C-2		60	46	55	BEDROCK	Gray medium grained, medium bedded, highly fractured, moderately weathered, and medium strong Gneiss. Core run times: 2.5, 2.5, 3.5, 3, 3 minutes.	215
45	C-3		48	60	90		Gray medium grained, medium bedded, moderately fractured, slightly weathered, and strong Gneiss. Core run times: 3, 3.5, 3, 5.5 minutes.	210
50	C-4		36	36	100		Gray medium grained, medium bedded, highly fractured, slightly weathered, and strong Gneiss. Core run times: 4, 3.5, 3.5	205
55								
60							END OF BORING 52ft	200

Sample Type: S = Split Spoon C = Core UP = Undisturbed Piston V = Vane Shear Test

Proportions Used: Trace = 1 - 10%, Little = 10 - 20%, Some = 20 - 35%, And = 35 - 50%

Total Penetration in Earth: 40ft Rock: 12ft No. of Soil Samples: 9 No. of Core Runs: 4	NOTES: 4.5" pavement structure, about a 3" cobble at 10' 3' boulder at 25.5', took rock core	Sheet 1 of 1 SM-001-M REV. 1/02

Connecticut DOT Boring Report

Driller: Tyler		Hole No.: B-2	
Inspector: Glenn L. Arzt	Town: Scotland, Connecticut	Stat./Offset: STA. 1+28.36 / 9.40 FT	
Engineer: Luke Arno	Project No.: 0123-0066	Northing: 1181789.021	
Start Date: 6-7-18	Route No.: 14	Easting: 815929.138	
Finish Date: 6-8-18	Bridge No.: 00681	Surface Elevation: 259.39	
Project Description: Replacement of Bridge 00681			
Casing Size/Type: 4" HFJ	Sampler Type/Size: 2"SS	Core Barrel Type: NX2	
Hammer Wt.: Fall: in.	Hammer Wt.: 140 Fall: 30in.		
Groundwater Observations: @5 after 0 hours			

Depth (ft)	Sample Type/No.	Blows on Sampler per 6 inches	Pen. (in.)	Rec. (in.)	RQD %	Generalized Strata Description	Material Description and Notes	Elevation (ft)
0	S-1	5 5 11 16	24	4		PAVEMENT STRUCTURE / MISC FILL	Brown C-F SAND, little M-F Gravel, tr. Silt	
5	S-2	21 14 17 11	24	10			Brown C-F SAND, little M-F Gravel, tr. Silt	255
10	S-3	20 13 12 18	24	15		SAND	Brown F-C SAND, tr. Silt	250
15	S-4	21 26 33 79/5"	23	16		GRAVELLY SAND	Gray C-F GRAVEL, little C-F Sand, tr. Silt	245
20	S-5	24 13 10 18	24	12			Brown C-F SAND, little F-M Gravel, tr. Silt	240
25	S-6	24 31 38 36	24	19			Brown C-F SAND, little F-M Gravel, tr. Silt	235
30	S-7	42 48 32 27	24	18		WEATHERED BEDROCK	Gray C-F SAND, some M-F Gravel, tr. Silt	230
35	C-1		60	52	36.6	BEDROCK	Gray medium grained, medium bedded, highly fractured, moderately weathered, and strong GNEISS. Core run times: 4.5, 2, 3, 3.5, 2.5 minutes.	225
40	C-2		60	60	86.6		Gray medium grained, medium bedded, highly fractured, slightly weathered, and strong GNEISS. Core run times: 2, 2, 2, 2, 2 minutes	220
45							END OF BORING 43ft	215
50								210

Sample Type: S = Split Spoon C = Core UP = Undisturbed Piston V = Vane Shear Test

Proportions Used: Trace = 1 - 10%, Little = 10 - 20%, Some = 20 - 35%, And = 35 - 50%

Total Penetration in Earth: 33ft Rock: 10ft No. of Soil Samples: 7 No. of Core Runs: 2	NOTES: 8" pavement structure, 15'-11" to 18'-6" various cobbles and boulders present	Sheet 1 of 1 SM-001-M REV. 1/02

REV.	DATE	REVISION DESCRIPTION	SHEET NO.

THE INFORMATION, INCLUDING ESTIMATED QUANTITIES OF WORK, SHOWN ON THESE SHEETS IS BASED ON LIMITED INVESTIGATIONS BY THE STATE AND IS IN NO WAY WARRANTED TO INDICATE THE CONDITIONS OF ACTUAL QUANTITIES OF WORK WHICH WILL BE REQUIRED.

Plotted Date: 7/23/2019

DESIGNER/DRAFTER: SPM

CHECKED BY: RIB

SCALE AS NOTED

STATE OF CONNECTICUT
DEPARTMENT OF TRANSPORTATION

Filename: ...\05_Borings 1.dgn

SIGNATURE/BLOCK: OFFICE OF ENGINEERING

APPROVED BY: Mary E. Back

PROJECT TITLE: REPLACEMENT OF BR. NO. 00681 - HUNTINGTON RD. (RTE 14) OVER MERRICK BROOK

TOWN: SCOTLAND

DRAWING TITLE: BORING LOGS - 1

PROJECT NO. 123-066

DRAWING NO. S-05

SHEET NO. 03.05

Connecticut DOT Boring Report

Driller:	Tyler	Hole No.:	B-3
Inspector:	S. Ghatee / G. Arzt	Town: Scotland, Connecticut	Stat./Offset: STA. 1+76.34 / 9.02 FT
Engineer:	Luke Arno	Project No.: 0123-0066	Northing: 1181836.89
Start Date:	6-12-18	Route No.: 14	Easting: 815932.379
Finish Date:	6-13-18	Bridge No.: 00681	Surface Elevation: 259.19

Project Description: Replacement of Bridge 00681

Casing Size/Type: 4" HFJ	Sampler Type/Size: 2" SS	Core Barrel Type: NX2
Hammer Wt.: Fall: in.	Hammer Wt.: 140 Fall: 30in.	

Groundwater Observations: @7 after 0 hours

Depth (ft)	Sample Type/No.	Blows on Sampler per 6 inches	Pen. (in.)	Rec. (in.)	RQD %	Generalized Strata Description	Material Description and Notes	Elevation (ft)
0	S-1	10 6 3 9	24	12		PAVEMENT STRUCTURE / MISC FILL	Brown F-C SAND, tr. F Gravel, tr. Silt	
5	S-2	12 11 20 11	24	10		GRAVELLY SAND	Brown C-F SAND and C-F GRAVEL, tr. Silt	255
10	S-3	6 7 38 22	24	9			Brown C-F SAND and M-F GRAVEL, tr. Silt	250
15	S-4	7 6 7 9	24	6		SAND	Brown F-C SAND, little Silt	245
20	S-5	8 9 15 22	24	14			Brown F-C SAND, tr. M-F Gravel, tr. Silt	240
25	S-6	18 26 18 16	24	7		GRAVELLY SAND	Brown C-F SAND, little M-F Gravel, tr. Silt	235
30	S-7	13 24 21 14	24	16			Brown C-F SAND and M-F GRAVEL, little Silt	230
35	S-8	13 13 10 12	24	7		WEATHERED BEDROCK	Gray M-F GRAVEL, some C-F SAND, tr. Silt	225
40	C-1		60	48	66.6	BEDROCK	Gray medium grained, medium bedded, moderately fractured, moderately weathered, and medium strong GNEISS. Core run times: 2.5, 2, 2, 2, 2 minutes.	220
45	C-2		60	56	31.6		Gray medium grained, medium bedded, highly fractured, moderately weathered, and medium strong GNEISS. Core run times: 1.5, 1.5, 1.5, 2, 2.5 minutes.	215
50							END OF BORING 49ft	210
55								205

Sample Type: S = Split Spoon C = Core UP = Undisturbed Piston V = Vane Shear Test

Proportions Used: Trace = 1 - 10%, Little = 10 - 20%, Some = 20 - 35%, And = 35 - 50%

Total Penetration in Earth: 39ft Rock: 10ft	NOTES: 7" pavement structure with no discernable subbase	Sheet 1 of 1
No. of Soil Samples: 8 No. of Core Runs: 2		SM-001-M REV. 1/02

Connecticut DOT Boring Report

Driller:	Tyler	Hole No.:	B-4
Inspector:	Glenn L. Arzt	Town: Scotland, Connecticut	Stat./Offset: STA. 1+29.80 / 3.58 FT
Engineer:	Luke Arno	Project No.: 0123-0066	Northing: 1181791.433
Start Date:	6-14-18	Route No.: 14	Easting: 815916.297
Finish Date:	6-15-18	Bridge No.: 00681	Surface Elevation: 259.23

Project Description: Replacement of Bridge 00681

Casing Size/Type:	Sampler Type/Size:	Core Barrel Type:
Hammer Wt.: Fall:	Hammer Wt.: Fall:	

Groundwater Observations: @6 after 0 hours

Depth (ft)	Sample Type/No.	Blows on Sampler per 6 inches	Pen. (in.)	Rec. (in.)	RQD %	Generalized Strata Description	Material Description and Notes	Elevation (ft)
0	S-1	17 11 7 7	24	8		PAVEMENT STRUCTURE / MISC FILL	Brown C-F SAND, little M-F Gravel, tr. Silt	
5	S-2	9 9 22 14	24	5			Gray M-F GRAVEL, some C-F Sand, tr. Silt	255
10	S-3	8 10 14 15	24	12		SAND	Brown F-C SAND, tr. Silt	250
15	S-4	18 23 13 14	24	12		GRAVELLY SAND	Brown C-F SAND, some M-F Gravel, tr. Silt	245
20	S-5	12 13 12 16	24	14			Brown C-F SAND and C-F GRAVEL, tr. Silt	240
25	S-6	57 45 100/3"	15	5		WEATHERED BEDROCK	Brown C-F SAND, little M-F Gravel, tr. Silt	235
30	C-1		60	10	0		Gray medium grained, medium bedded, intensely fractured, moderately weathered, and medium strong GNEISS. Core run times: 2.5, 1, 4.5, 0.5 minutes.	230
35	S-7	50/0"	0	0		BEDROCK	No Recovery	225
	C-2		60	56	63.3		Gray medium grained, medium bedded, highly fractured, slightly weathered, and medium strong GNEISS. Core run times: 3, 2, 2, 2, 2.5 minutes.	220
40	C-3		60	57	76.6		Gray medium grained, medium bedded, highly fractured, slightly weathered, and medium strong GNEISS. Core run times: 2, 2, 2.5, 2.5, 3 minutes.	215
45							END OF BORING 44ft	
50								210

Sample Type: S = Split Spoon C = Core UP = Undisturbed Piston V = Vane Shear Test

Proportions Used: Trace = 1 - 10%, Little = 10 - 20%, Some = 20 - 35%, And = 35 - 50%

Total Penetration in Earth: 34ft Rock: 10ft	NOTES: 8" pavement structure	Sheet 1 of 1
No. of Soil Samples: 7 No. of Core Runs: 3		SM-001-M REV. 1/02

REV.	DATE	REVISION DESCRIPTION	SHEET NO.

THE INFORMATION, INCLUDING ESTIMATED QUANTITIES OF WORK, SHOWN ON THESE SHEETS IS BASED ON LIMITED INVESTIGATIONS BY THE STATE AND IS IN NO WAY WARRANTED TO INDICATE THE CONDITIONS OF ACTUAL QUANTITIES OF WORK WHICH WILL BE REQUIRED.

Plotted Date: 7/23/2019

DESIGNER/DRAFTER: SPM

CHECKED BY: RIB

SCALE AS NOTED

STATE OF CONNECTICUT
DEPARTMENT OF TRANSPORTATION

Filename: ...\06_Borings 2.dgn

SIGNATURE/BLOCK: OFFICE OF ENGINEERING

APPROVED BY: Mary E. Cook

PROJECT TITLE: REPLACEMENT OF BR. NO. 00681 - HUNTINGTON RD. (RTE 14) OVER MERRICK BROOK

TOWN: SCOTLAND

DRAWING TITLE: BORING LOGS - 2

PROJECT NO. 123-066

DRAWING NO. S-06

SHEET NO. 03.06

WORKING POINTS AND COORDINATES

WORKING POINT	NORTHING	EASTING	STATION	OFFSET (FT)
WP 1	815919.81	1181790.39	1+29.02	0
WP 2	815901.41	1181798.70	1+35.92	18.97
WP 3	815900.34	1181785.94	1+23.12	19.08
WP 4	815919.55	1181786.94	1+25.56	0
WP 5	815937.09	1181770.44	1+10.44	18.73
WP 6	815937.36	1181782.45	1+22.43	18.10
WP 7	815923.86	118143.85	1+82.63	0
WP 8	815904.93	1181852.41	1+89.74	19.52
WP 9	815906.27	1181864.34	2+01.82	19.06
WP 10	815924.12	1181847.30	1+86.09	0
WP 11	815941.96	1181848.91	1+89.06	17.67
WP 12	815940.88	118136.15	1+76.24	17.56

LEGEND

DENOTES LIMITS OF COFFERDAM MATERIAL TO BE LEFT IN PLACE

DENOTES LIMITS OF COFFERDAM TO BE REMOVED

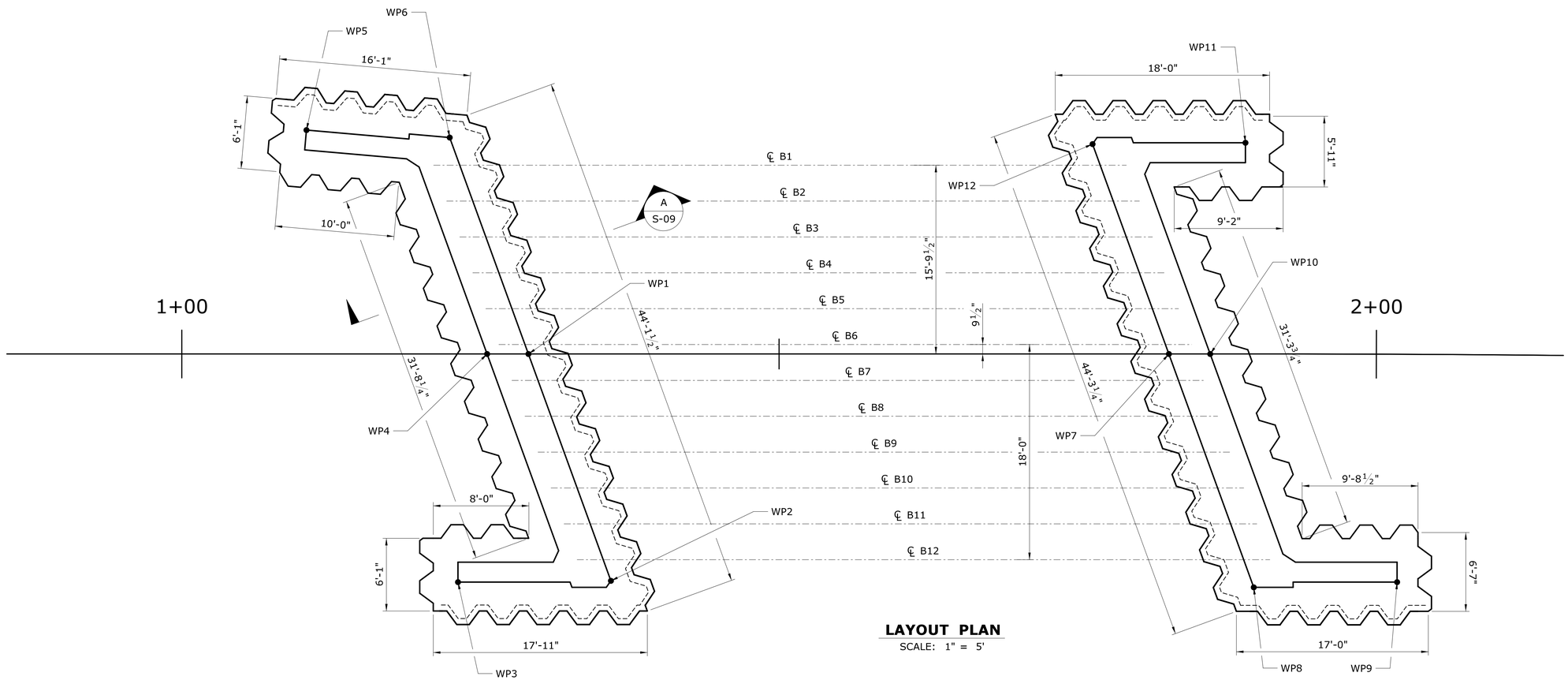

LAYOUT PLAN
SCALE: 1" = 5'

REV.	DATE	REVISION DESCRIPTION	SHEET NO.

THE INFORMATION, INCLUDING ESTIMATED QUANTITIES OF WORK, SHOWN ON THESE SHEETS IS BASED ON LIMITED INVESTIGATIONS BY THE STATE AND IS IN NO WAY WARRANTED TO INDICATE THE CONDITIONS OF ACTUAL QUANTITIES OF WORK WHICH WILL BE REQUIRED.

Plotted Date: 7/23/2019

DESIGNER/DRAFTER: SPM
CHECKED BY: RIB
SCALE AS NOTED

STATE OF CONNECTICUT
DEPARTMENT OF TRANSPORTATION

Filename: ..\07_Layout Plan.dgn

SIGNATURE/BLOCK:
OFFICE OF ENGINEERING
APPROVED BY:

PROJECT TITLE:
REPLACEMENT OF BR. NO. 00681 - HUNTINGTON RD. (RTE 14) OVER MERRICK BROOK

TOWN: SCOTLAND

DRAWING TITLE: LAYOUT PLAN

PROJECT NO. 123-066
DRAWING NO. S-07
SHEET NO. 03.07

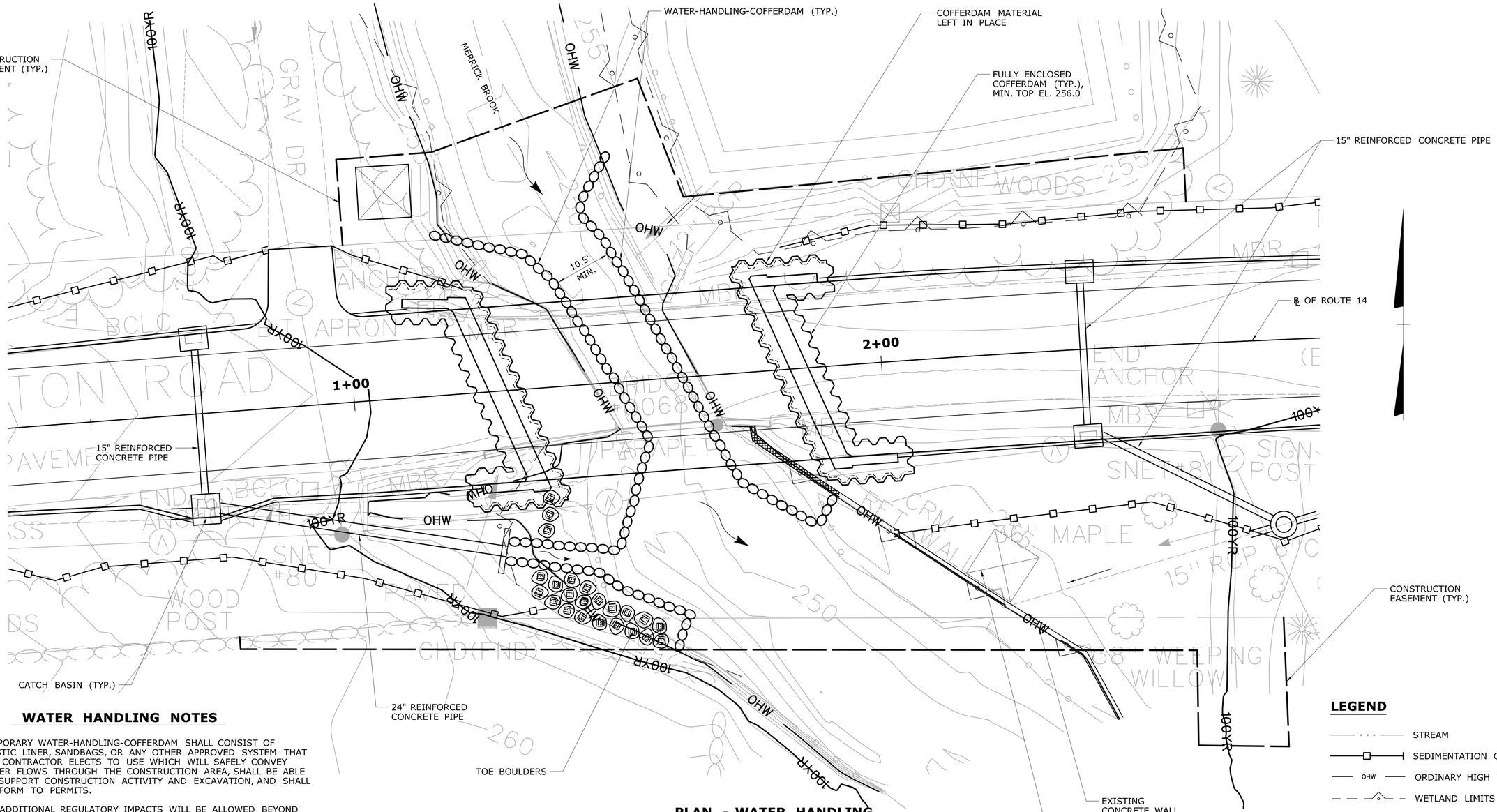

PLAN - WATER HANDLING

SCALE: 1" = 10'

WATER HANDLING NOTES

1. TEMPORARY WATER-HANDLING-COFFERDAM SHALL CONSIST OF PLASTIC LINER, SANDBAGS, OR ANY OTHER APPROVED SYSTEM THAT THE CONTRACTOR ELECTS TO USE WHICH WILL SAFELY CONVEY WATER FLOWS THROUGH THE CONSTRUCTION AREA, SHALL BE ABLE TO SUPPORT CONSTRUCTION ACTIVITY AND EXCAVATION, AND SHALL CONFORM TO PERMITS.
2. NO ADDITIONAL REGULATORY IMPACTS WILL BE ALLOWED BEYOND THE AREAS SHOWN ON THE IMPACT PLANS. ALL DISTURBED AREAS SHALL BE RESTORED.
3. EXISTING DRAINAGE PIPES SHALL BE MAINTAINED AND PROTECTED DURING CONSTRUCTION. THESE DRAINAGE PIPES SHALL REMAIN IN OPERATION THROUGHOUT CONSTRUCTION AND BE PROTECTED FROM DAMAGE, ROTATION, AND DISPLACEMENT BY MEANS AND METHODS OF THE CONTRACTOR.
4. WHEN A STORM EVENT GREATER THAN OR EQUAL TO THE 5-YEAR FREQUENCY IS ANTICIPATED (4.3" IN 24-HOUR, 3.5" IN 12-HOUR, 2.8" IN 6-HOUR, 2.2" IN 3-HR OR 1.9" IN 2-HOUR), REMOVE THE LATERAL SECTIONS (SECTIONS PERPENDICULAR TO FLOW) OF THE WATER-HANDLING-COFFERDAM TO REDUCE THE EXTENT OF FLOODING.

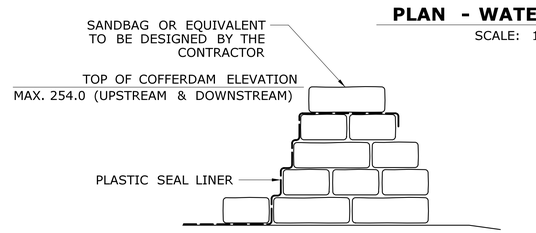

WATER-HANDLING-COFFERDAM

NOT TO SCALE

LEGEND

- STREAM
- SEDIMENTATION CONTROL SYSTEM
- OHW — ORDINARY HIGH WATER (OHW)
- WETLAND LIMITS
- 100YR — EXISTING 100-YEAR FLOOD (CALCULATED)
- COFFERDAM
- COFFERDAM MATERIAL LEFT IN PLACE
- WATER-HANDLING-COFFERDAM

TEMPORARY HYDRAULIC DATA

AVERAGE DAILY FLOW (ADF)	15 CFS
AVERAGE DAILY SPRING FLOW (ASF)	29.5 CFS
2-YEAR FREQUENCY DISCHARGE	380 CFS
TEMPORARY DESIGN DISCHARGE	177 CFS
TEMPORARY DESIGN FREQUENCY	6 X ASF
TEMPORARY WATER SURFACE ELEV.	253.9 FT - UPSTREAM
	253.8 FT - DOWNSTREAM

REV.	DATE	REVISION DESCRIPTION	SHEET NO.

THE INFORMATION, INCLUDING ESTIMATED QUANTITIES OF WORK, SHOWN ON THESE SHEETS IS BASED ON LIMITED INVESTIGATIONS BY THE STATE AND IS IN NO WAY WARRANTED TO INDICATE THE CONDITIONS OF ACTUAL QUANTITIES OF WORK WHICH WILL BE REQUIRED.

Plotted Date: 7/23/2019

DESIGNER/DRAFTER: SPM
CHECKED BY: RIB
SCALE AS NOTED

STATE OF CONNECTICUT
DEPARTMENT OF TRANSPORTATION

Filename: ...\08_Water Handling.dgn

SIGNATURE/BLOCK:
OFFICE OF ENGINEERING
APPROVED BY:

PROJECT TITLE:
REPLACEMENT OF BR. NO. 00681 - HUNTINGTON RD. (RTE 14) OVER MERRICK BROOK

TOWN: **SCOTLAND**

DRAWING TITLE: **WATER HANDLING PLAN**

PROJECT NO. 123-066
DRAWING NO. S-08
SHEET NO. 03.08

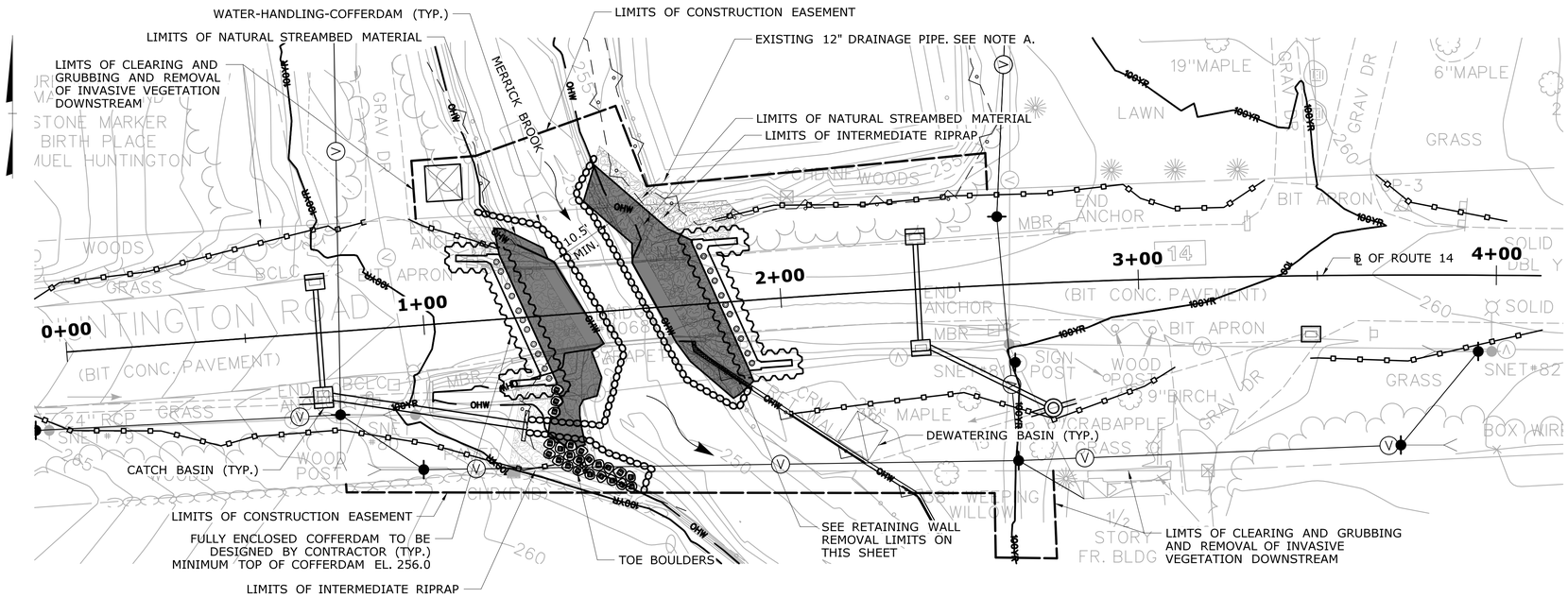

PLAN - SEQUENCE 1 DEMOLITION

SCALE: 1" = 20'

NOTE A:

THE CONTRACTOR SHALL MAINTAIN AND PROTECT THE EXISTING DRAINAGE PIPE DURING CONSTRUCTION. THIS FACILITY SHALL REMAIN IN OPERATION THROUGHOUT CONSTRUCTION AND BE PROTECTED FROM DAMAGE, ROTATION, AND DISPLACEMENT BY MEANS AND METHODS OF THE CONTRACTOR. THE COST OF WORK AND MATERIALS REQUIRED TO MAINTAIN AND PROTECT THE FACILITY SHALL BE INCLUDED IN THE ITEM "HANDLING WATER."

SEQUENCE 1 - WATER HANDLING AND DEMOLITION

SUGGESTED SEQUENCE OF CONSTRUCTION

1. CLEAR AND GRUB, CONTROL AND REMOVE INVASIVE VEGETATION AND INSTALL SEDIMENTATION CONTROL.
2. RELOCATE UTILITY POLES TO TEMPORARY LOCATIONS (BY OTHERS).
3. INSTALL DRAINAGE PIPES AND CATCH BASINS.
4. INSTALL PILES AND TEST PRODUCTION PILES. PLACE SUBBASE AND TEMPORARY PAVEMENT OVER PILES WITHIN EXISTING ROADWAY LIMITS. SEE DWG. NO. S-12 FOR TEMPORARY PAVEMENT STRUCTURE DETAIL.
5. CLOSE ROAD AND DETOUR TRAFFIC. THE CONTRACTOR SHALL INSTALL TEMPORARY PRECAST CONCRETE BARRIER CURB ACROSS ROUTE 14 TO PREVENT PEDESTRIAN ACCESS TO CONSTRUCTION AREA. THE BARRIER SHALL REMAIN IN PLACE AT ALL TIMES THROUGHOUT THE DETOUR, SEE TRAFFIC PLANS FOR DETAILS.
6. INSTALL DEBRIS SHIELD AND REMOVE EXISTING SUPERSTRUCTURE.
7. INSTALL FULLY ENCLOSED COFFERDAMS FOR NEW ABUTMENTS AROUND PILES. REMOVE PORTION OF EXISTING WINGWALL AS NECESSARY. INSTALL DEWATERING BASINS. EXCAVATE WITHIN COFFERDAM LIMITS.
8. PLACE GRANULAR FILL WITHIN COFFERDAM AND INSTALL PRECAST ABUTMENTS, FILL VOIDS AND CONSTRUCT SHEAR KEYS. DAMPPROOF AND BACKFILL.
9. INSTALL TEMPORARY WATER HANDLING.
10. EXCAVATE BEHIND EXISTING ABUTMENTS. REMOVE EXISTING ABUTMENTS AND WINGWALLS TO EL. 249.0. REMOVE PORTION OF EXISTING RETAINING WALL.
11. REMOVE COFFERDAM WITHIN ROADWAY LIMITS AND CUT COFFERDAM MATERIAL LEFT IN PLACE BELOW GRADE.
12. CONSTRUCT REVETMENT. INSTALL RIPRAP AND TOE BOULDERS. REMOVE WATER HANDLING.

LEGEND

- STREAM
- SEDIMENTATION CONTROL SYSTEM
- OHW — ORDINARY HIGH WATER (OHW)
- WETLAND LIMITS
- 100YR — EXISTING 100-YEAR FLOOD (CALCULATED)

RETAINING WALL REMOVAL NOTE

REMOVAL OF CONCRETE RETAINING WALL TO BE PAID FOR UNDER THE ITEM "REMOVAL OF EXISTING MASONRY".

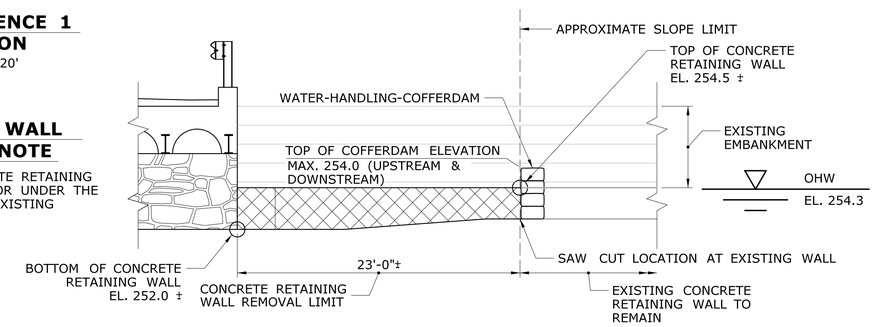

ELEVATION - EXISTING RETAINING WALL REMOVAL LIMIT

NOT TO SCALE

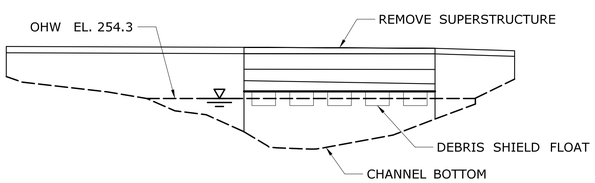

ELEVATION - DEBRIS SHIELD

SCALE: 1/8" = 1'-0"

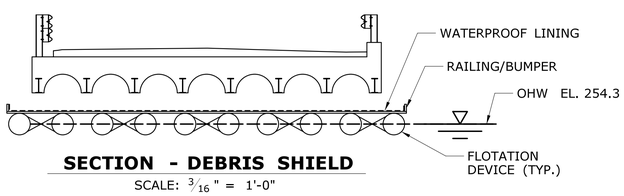

SECTION - DEBRIS SHIELD

SCALE: 3/16" = 1'-0"

DEBRIS SHIELD FLOAT NOTES:

1. FLOAT SHALL HAVE WATERPROOF LINING AND RAILING/BUMPER SYSTEM TO PREVENT DEBRIS FROM ENTERING THE WATERWAY.
2. FLOAT SHALL BE SUFFICIENTLY BUOYANT SO AS NOT TO BE FOUNDED ON THE THE SUBSTRATE AT ANY TIME DURING ITS USE.
3. WHEN NOT IN USE, FLOAT SHALL BE STORED WITHIN THE PROJECT IMPACT AREA.
4. WORKFLOAT SHALL NOT BE STORED WITHIN THE WATERWAY NOR WITHIN UNDISTURBED WETLANDS.
5. DEBRIS SHIELD SHALL BE PAID FOR UNDER THE ITEM "REMOVAL OF SUPERSTRUCTURE".

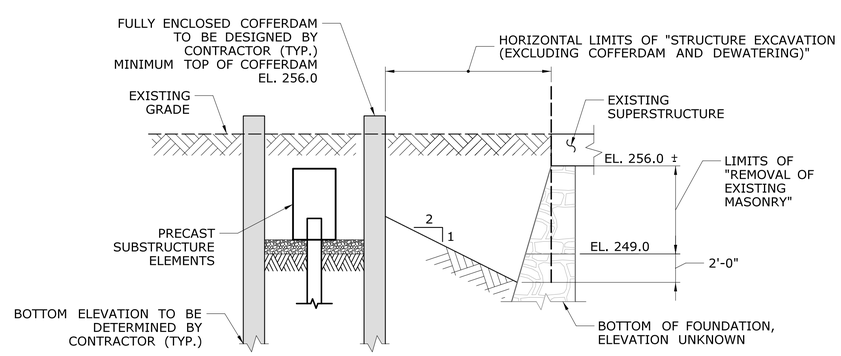

STAGE 1 - STRUCTURE EXCAVATION PAY LIMITS

NOT TO SCALE

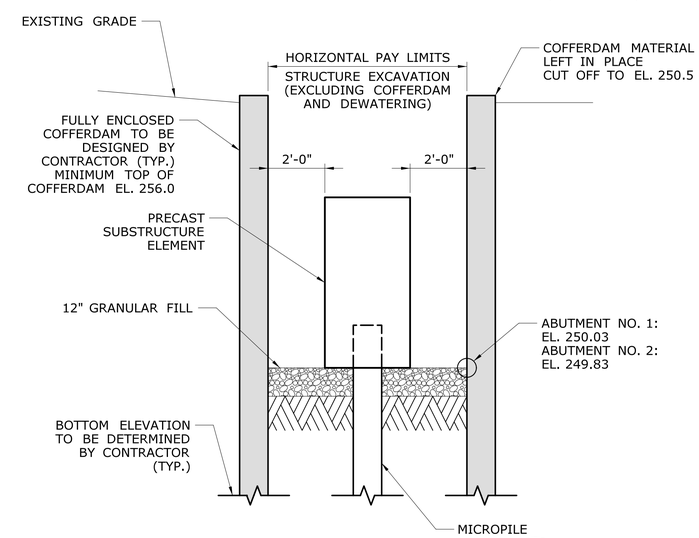

EXCAVATION SECTION VIEW

A / S-07

SCALE: 3/8" = 1'-0"

(ABUTMENT 1 SHOWN. ABUTMENT 2 SIMILAR.)

REV.	DATE	REVISION DESCRIPTION	SHEET NO.

THE INFORMATION, INCLUDING ESTIMATED QUANTITIES OF WORK, SHOWN ON THESE SHEETS IS BASED ON LIMITED INVESTIGATIONS BY THE STATE AND IS IN NO WAY WARRANTED TO INDICATE THE CONDITIONS OF ACTUAL QUANTITIES OF WORK WHICH WILL BE REQUIRED.

Plotted Date: 8/13/2019

DESIGNER/DRAFTER: SPM

CHECKED BY: RIB

SCALE AS NOTED

STATE OF CONNECTICUT
DEPARTMENT OF TRANSPORTATION

Filename: ...\09_Construction Sequence 1.dgn

SIGNATURE/BLOCK: OFFICE OF ENGINEERING

APPROVED BY: Mary E. Bach

PROJECT TITLE: REPLACEMENT OF BR. NO. 00681 - HUNTINGTON RD. (RTE 14) OVER MERRICK BROOK

TOWN: SCOTLAND

DRAWING TITLE: CONSTRUCTION SEQUENCE 1

PROJECT NO. 123-066

DRAWING NO. S-09

SHEET NO. 03.09

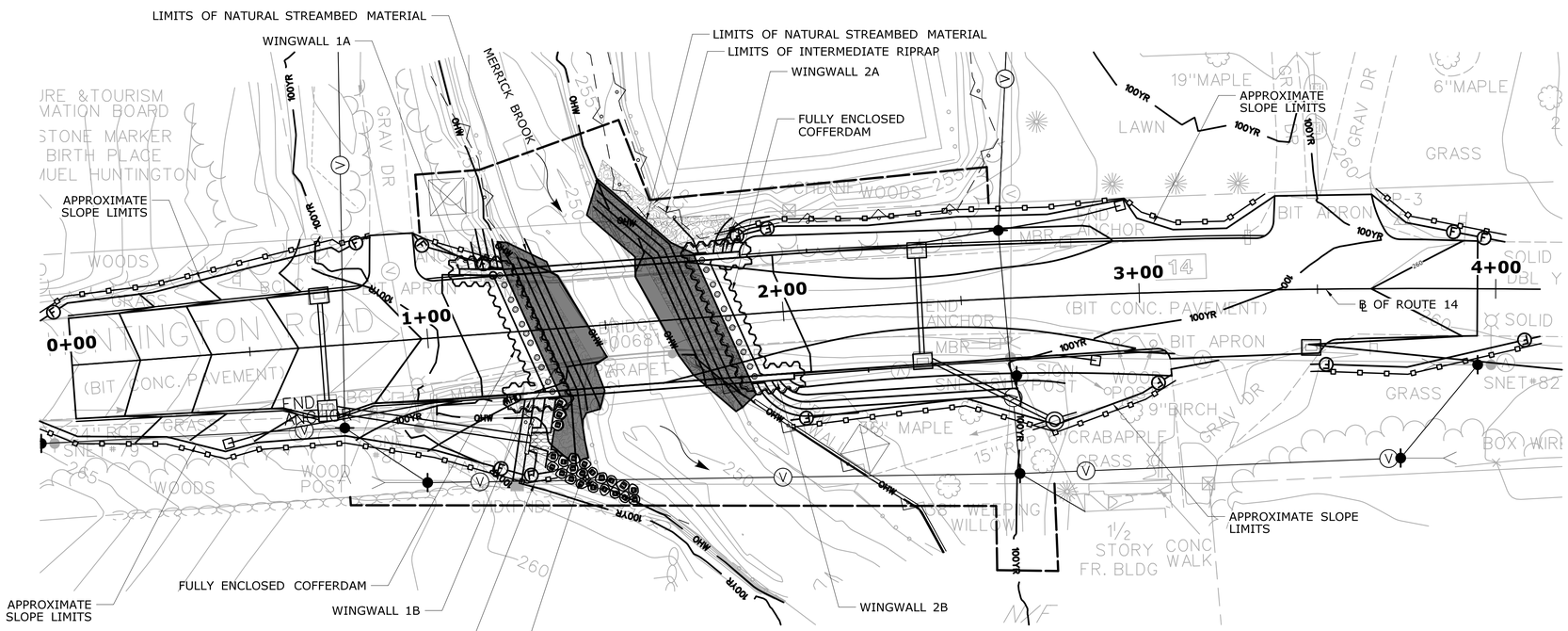

PLAN - SEQUENCE 2 CONSTRUCTION

SCALE: 1" = 20'

SEQUENCE 2 - CONSTRUCTION

SUGGESTED SEQUENCE OF CONSTRUCTION

1. INSTALL ELASTOMERIC BEARINGS AND PRESTRESSED DECK UNITS.
2. FORM DECK, INSTALL REINFORCEMENT AND PLACE CONCRETE DECK.
3. CONSTRUCT CAST-IN-PLACE WINGWALLS AND CONCRETE PARAPETS.
4. DAMPPROOF CAST-IN-PLACE WINGWALLS AND DECK END.
5. CONSTRUCT APPROACH SLABS.
6. CONSTRUCT TEMPORARY APPROACH ROADWAY TO BRIDGE.
7. INSTALL MEMBRANE AND HMA OVERLAY ON BRIDGE AND APPROACH SLABS.
8. GRADE GROUND SURFACE.
9. INSTALL METAL BEAM RAIL ON APPROACHES.
10. INSTALL TEMPORARY PAVEMENT MARKINGS.

LEGEND

- STREAM
- SEDIMENTATION CONTROL SYSTEM
- OHW — ORDINARY HIGH WATER (OHW)
- WETLAND LIMITS
- 100YR — EXISTING 100-YEAR FLOOD (CALCULATED)

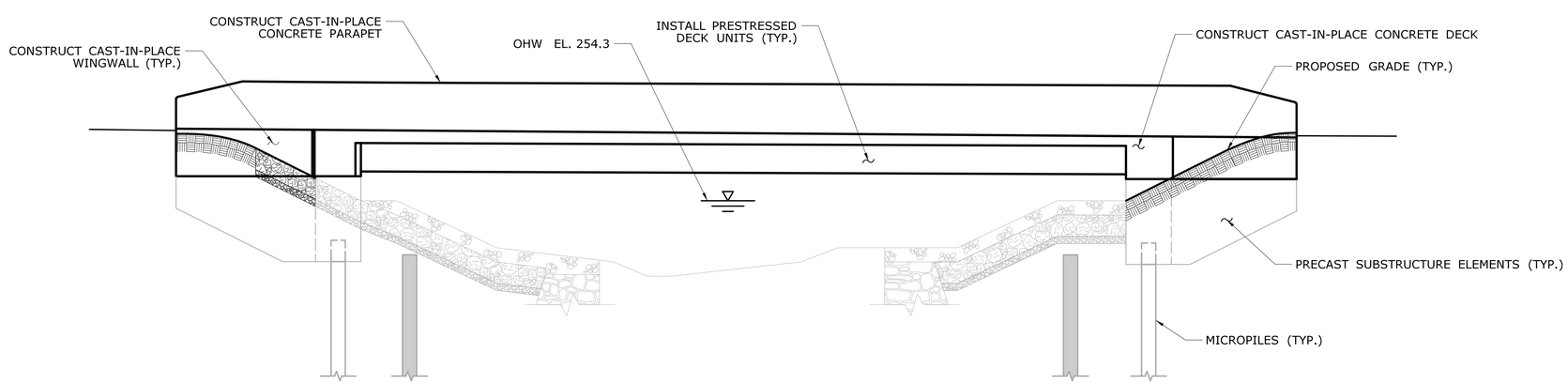

ELEVATION - SEQUENCE 2 CONSTRUCTION

SCALE: 1" = 5'

REV.	DATE	REVISION DESCRIPTION	SHEET NO.

THE INFORMATION, INCLUDING ESTIMATED QUANTITIES OF WORK, SHOWN ON THESE SHEETS IS BASED ON LIMITED INVESTIGATIONS BY THE STATE AND IS IN NO WAY WARRANTED TO INDICATE THE CONDITIONS OF ACTUAL QUANTITIES OF WORK WHICH WILL BE REQUIRED.

Plotted Date: 7/23/2019

DESIGNER/DRAFTER: SPM

CHECKED BY: RIB

SCALE AS NOTED

STATE OF CONNECTICUT
DEPARTMENT OF TRANSPORTATION

Filename: ...\10_Construction Sequence 2.dgn

SIGNATURE/BLOCK: OFFICE OF ENGINEERING

APPROVED BY: Mary E. Buck

PROJECT TITLE: REPLACEMENT OF BR. NO. 00681 - HUNTINGTON RD. (RTE 14) OVER MERRICK BROOK

TOWN: SCOTLAND

DRAWING TITLE: CONSTRUCTION SEQUENCE 2

PROJECT NO. 123-066

DRAWING NO. S-10

SHEET NO. 03.10

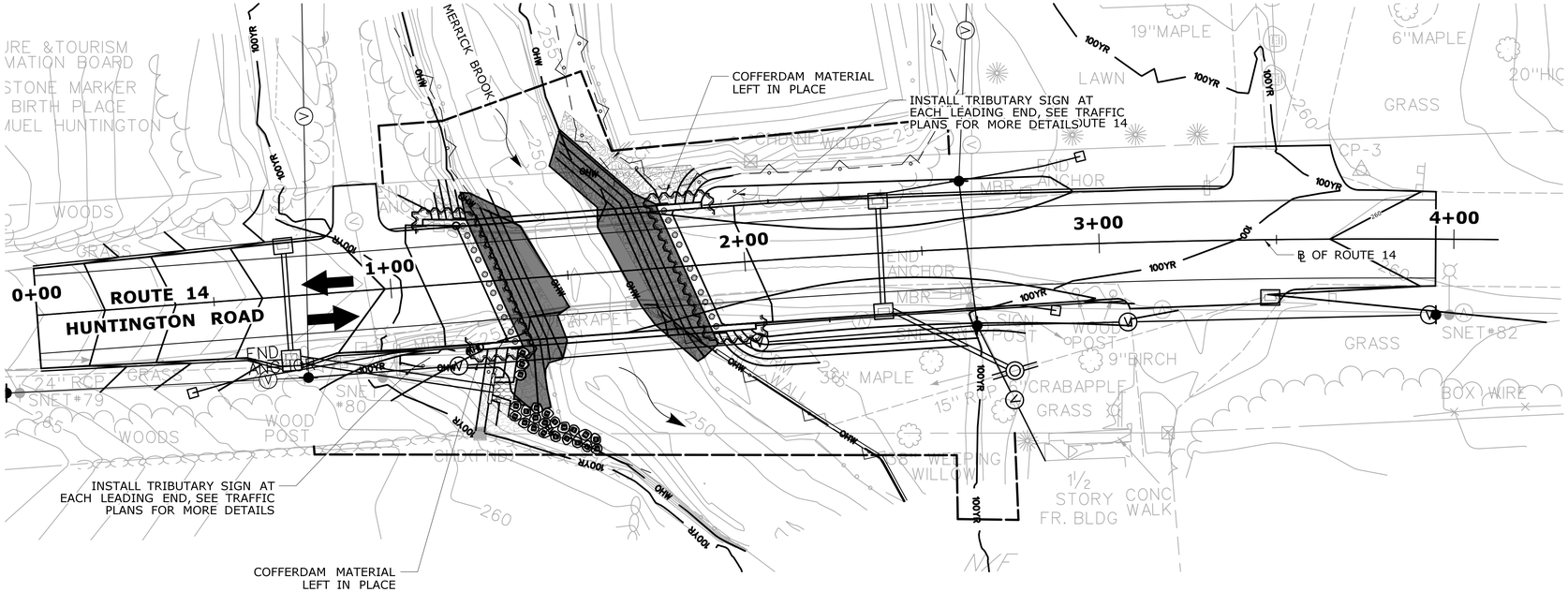

PLAN - SEQUENCE 3
CONSTRUCTION

SEQUENCE 3 - CONSTRUCTION

SUGGESTED SEQUENCE OF CONSTRUCTION

1. OPEN ROADWAY TO TRAFFIC.
2. COMPLETE ROADWAY RECONSTRUCTION ON APPROACHES.
3. INSTALL PERMANENT PAVEMENT MARKINGS.
4. RELOCATE UTILITY POLES TO PERMANENT LOCATIONS (BY OTHERS).
5. INSTALL BRIDGE NUMBER PLACARD AND TRIBUTARY SIGN AT EACH LEADING END.
6. LANDSCAPE AND REMOVE EROSION AND SEDIMENTATION CONTROL SYSTEM UPON PERMANENT STABILIZATION.

LEGEND

- STREAM
- SEDIMENTATION CONTROL SYSTEM
- OHW — ORDINARY HIGH WATER (OHW)
- WETLAND LIMITS
- 100YR — EXISTING 100-YEAR FLOOD (CALCULATED)

REV.	DATE	REVISION DESCRIPTION	SHEET NO.

THE INFORMATION, INCLUDING ESTIMATED QUANTITIES OF WORK, SHOWN ON THESE SHEETS IS BASED ON LIMITED INVESTIGATIONS BY THE STATE AND IS IN NO WAY WARRANTED TO INDICATE THE CONDITIONS OF ACTUAL QUANTITIES OF WORK WHICH WILL BE REQUIRED.

Plotted Date: 7/23/2019

DESIGNER/DRAFTER: SPM
CHECKED BY: RIB
SCALE AS NOTED

STATE OF CONNECTICUT
DEPARTMENT OF TRANSPORTATION

Filename: ...\11_Construction Sequence 3.dgn

SIGNATURE/ BLOCK:
OFFICE OF ENGINEERING
APPROVED BY:

PROJECT TITLE:
REPLACEMENT OF BR. NO. 00681 - HUNTINGTON RD. (RTE. 14) OVER MERRICK BROOK

TOWN: SCOTLAND

DRAWING TITLE:
CONSTRUCTION SEQUENCE 3

PROJECT NO. 123-066
DRAWING NO. S-11
SHEET NO. 03.11

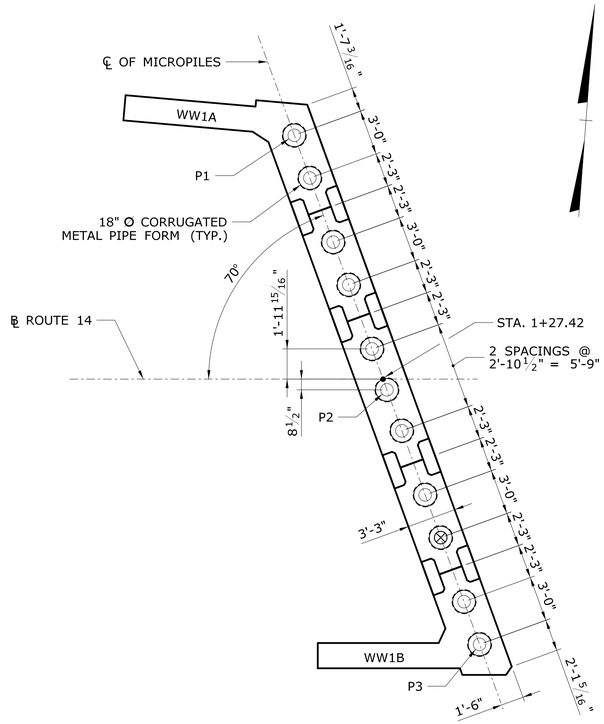

PILE PLAN - ABUTMENT 1

SCALE: 1" = 5'

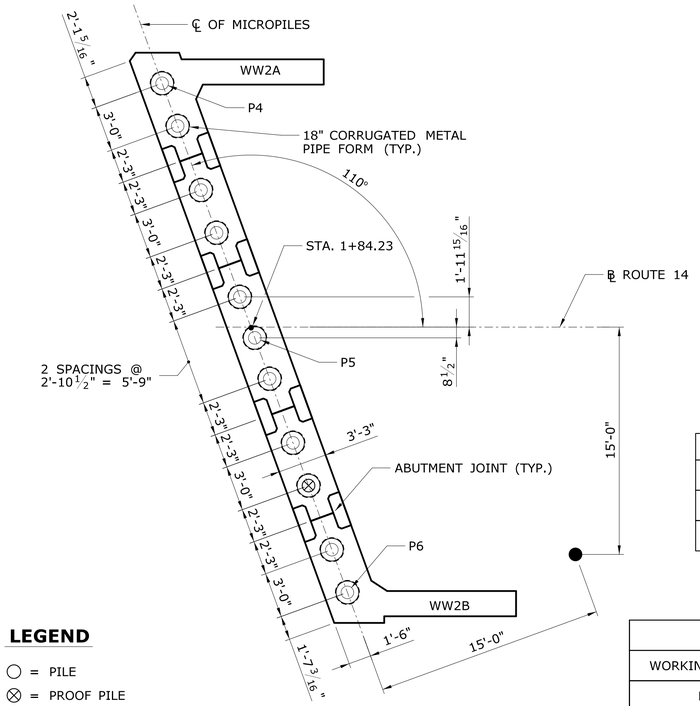

PILE PLAN - ABUTMENT 2

SCALE: 1" = 5'

LEGEND

○ = PILE

⊗ = PROOF PILE

● = VERIFICATION PILE

PILE NOTES

1. THE MICROPILE SHALL BE DESIGNED, INSTALLED, AND TESTED BY THE CONTRACTOR IN ACCORDANCE WITH THE ITEM "MICROPILES". THE MICROPILE SHALL BE DESIGNED ACCORDING TO AASHTO LRFD BRIDGE DESIGN SPECIFICATIONS 8TH EDITION (2017), WITH LATEST INTERIM SPECIFICATIONS AS SUPPLEMENTED BY THE CONNECTICUT DEPARTMENT OF TRANSPORTATION BRIDGE DESIGN MANUAL (2003).
2. A "VERIFICATION TEST FOR MICROPILES" SHALL BE PERFORMED ON A SINGLE NON-PRODUCTION MICROPILE AT THE LOCATION SHOWN ON THIS SHEET. A "PROOF TEST FOR MICROPILES" SHALL BE PERFORMED ON A SINGLE PRODUCTION MICROPILE AT EACH ABUTMENT. THE PROOF TEST LOCATIONS FOR EACH PILE AT EACH ABUTMENT SHALL BE AS SHOWN ON THIS SHEET.
3. THE CONNECTION OF THE STEEL CASING TO THE PRECAST ABUTMENT SHALL BE DESIGNED TO RESIST, IN COMPRESSION, A FORCE OF NO LESS THAN THE MAXIMUM STRENGTH LIMIT PILE LOAD.
4. THE CASING AND THE REINFORCEMENT SHALL EXTEND INTO THE ABUTMENT AS SHOWN ON THE PLANS AT A MINIMUM. THE CASING AND REINFORCEMENT BEARING PLATE DIMENSIONS SHALL BE DETERMINED BY DESIGN.
5. THE MICROPILE CASING SHALL EXTEND A MINIMUM OF 6" INTO BEDROCK. THE BOND ZONE SHALL BE A MINIMUM OF 5'-0" IN LENGTH AND SHALL BE LOCATED COMPLETELY BELOW BEDROCK.
6. NO SPLICING OF THE CENTRAL REINFORCING WILL BE ALLOWED WITHIN THE TOP 15 FEET OF THE MICROPILE.
7. ON THE CENTRAL REINFORCEMENT THE MECHANICAL SPLICE COUPLERS SHALL DEVELOP 125% IN TENSION AND COMPRESSION OF THE SPECIFIED YIELD STRENGTH OF THE BAR BEING SPLICED.
8. CASING JOINTS ARE NOT PERMITTED IN THE UPPER 10 FEET OF MICROPILE.
9. MICROPILES SHALL BE INSTALLED WITH A LATERAL TOLERANCE OF 3" IN PLAN.
10. NEAT CEMENT GROUT SHALL ATTAIN A MINIMUM 28 DAY COMPRESSIVE STRENGTH OF F'c = 4.0 KSI.
11. PAY ITEM "MICROPILE LENGTH ADJUSTMENT" SHALL BE USED TO PAY FOR THE DIFFERENCES BETWEEN ESTIMATED LENGTHS AND ACTUAL LENGTHS OF THE CASING.

MICROPILE DESIGN LOADS	
MAXIMUM STRENGTH LIMIT PILE LOAD	135 KIPS
MAXIMUM SERVICE LIMIT PILE LOAD	86 KIPS
ULTIMATE PILE CAPACITY	193 KIPS

NOTE: ALL PILE LOADS GIVEN ARE IN COMPRESSION.

PILE LOCATIONS		
WORKING POINT	NORTHING	EASTING
P1	815935.29	1181781.74
P2	815919.01	1181789.10
P3	815902.72	1181796.47
P4	815939.58	1181838.39
P5	815923.29	1181845.75
P6	815907.00	1181853.12

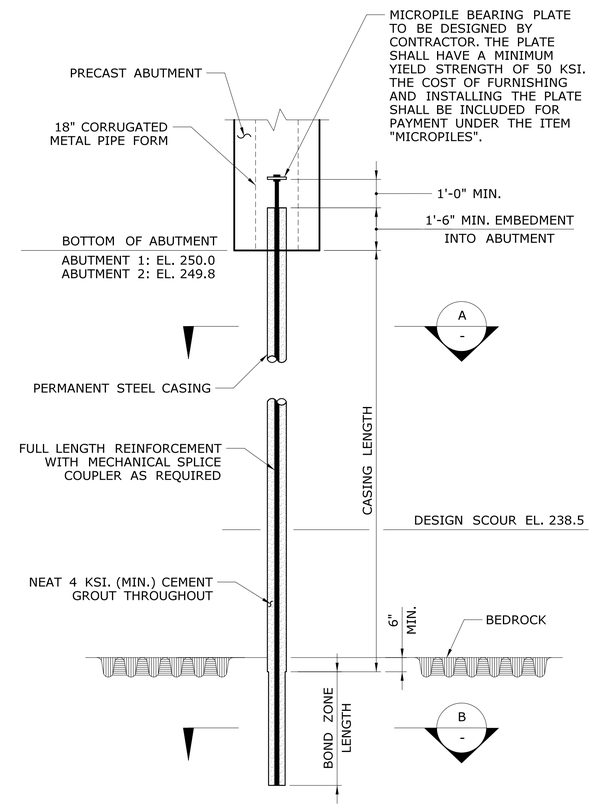

TYPICAL MICROPILE ELEVATION

SCALE: 3/8" = 1'-0"

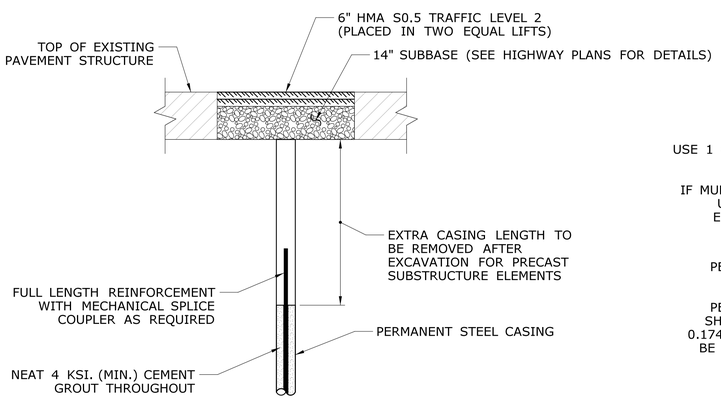

TEMPORARY PAVEMENT STRUCTURE DETAIL FOR MICROPILES

SCALE: 3/8" = 1'-0"

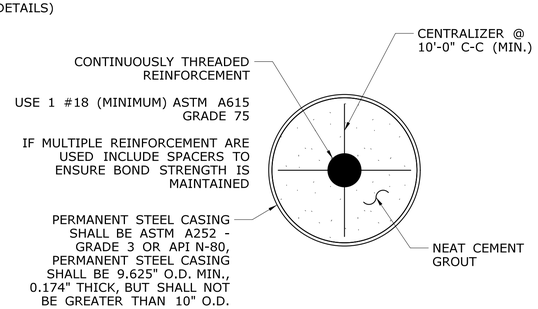

SECTION - CASED PORTION OF MICROPILE

A / -

SCALE: 3" = 1'-0"

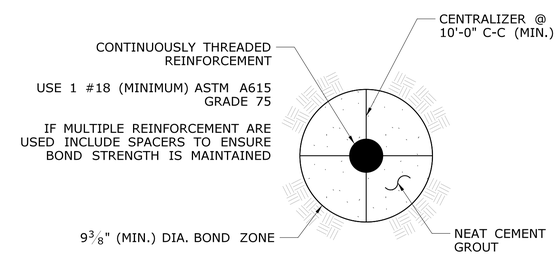

SECTION - UNCASED PORTION OF MICROPILE

B / -

SCALE: 3" = 1'-0"

REV.	DATE	REVISION DESCRIPTION	SHEET NO.

THE INFORMATION, INCLUDING ESTIMATED QUANTITIES OF WORK, SHOWN ON THESE SHEETS IS BASED ON LIMITED INVESTIGATIONS BY THE STATE AND IS IN NO WAY WARRANTED TO INDICATE THE CONDITIONS OF ACTUAL QUANTITIES OF WORK WHICH WILL BE REQUIRED.

Plotted Date: 8/16/2019

DESIGNER/DRAFTER: SPM

CHECKED BY: RIB

SCALE AS NOTED

STATE OF CONNECTICUT
DEPARTMENT OF TRANSPORTATION

Filename: ...\12_Pile Plan and Details.dgn

SIGNATURE/BLOCK: OFFICE OF ENGINEERING

APPROVED BY: Mary E. Beck

PROJECT TITLE: REPLACEMENT OF BR. NO. 00681 - HUNTINGTON RD. (RTE 14) OVER MERRICK BROOK

TOWN: SCOTLAND

DRAWING TITLE: PILE PLAN AND DETAILS

PROJECT NO. 123-066

DRAWING NO. S-12

SHEET NO. 03.12

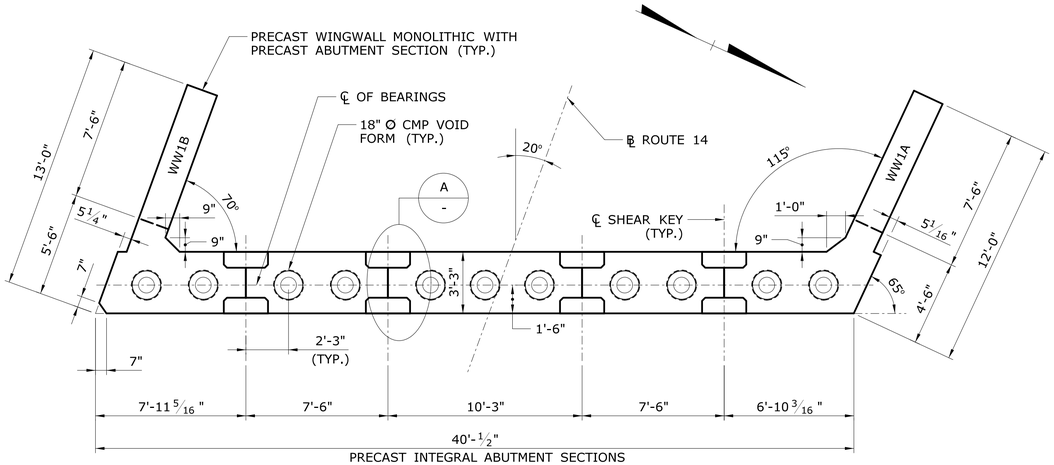

PLAN - ABUTMENT 1

SCALE: ¼" = 1'-0"

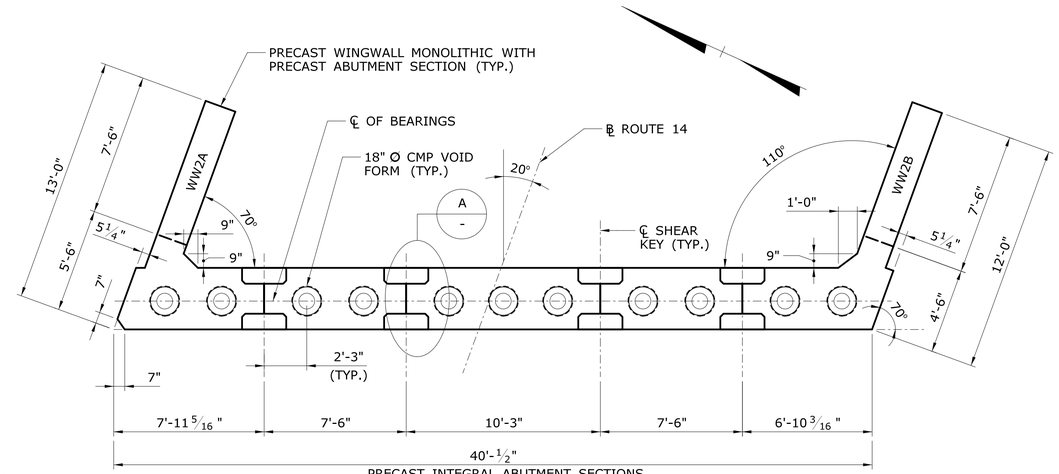

PLAN - ABUTMENT 2

SCALE: ¼" = 1'-0"

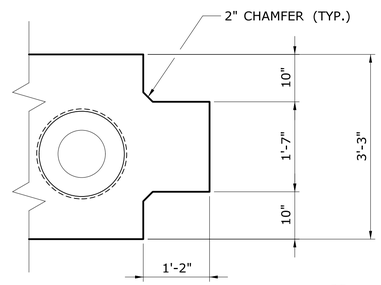

TYPICAL SHEAR KEY DETAIL A -

SCALE: ¾" = 1'-0"

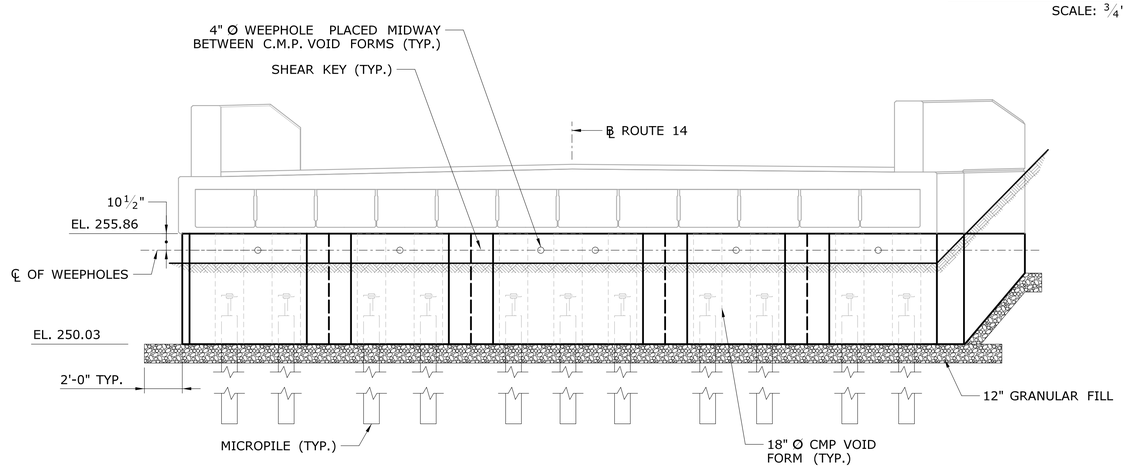

ELEVATION - ABUTMENT 1

SCALE: ¼" = 1'-0"

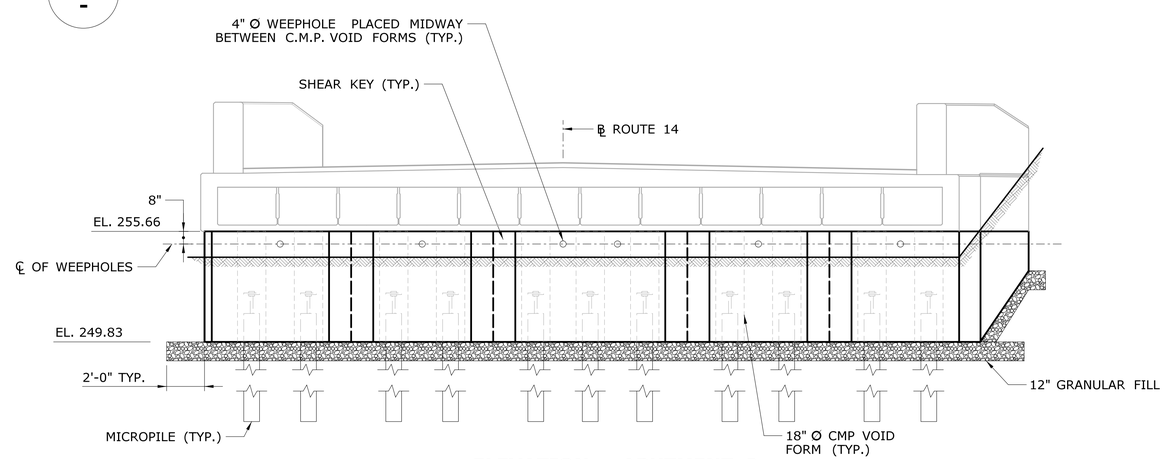

ELEVATION - ABUTMENT 2

SCALE: ¼" = 1'-0"

REV.	DATE	REVISION DESCRIPTION	SHEET NO.

THE INFORMATION, INCLUDING ESTIMATED QUANTITIES OF WORK, SHOWN ON THESE SHEETS IS BASED ON LIMITED INVESTIGATIONS BY THE STATE AND IS IN NO WAY WARRANTED TO INDICATE THE CONDITIONS OF ACTUAL QUANTITIES OF WORK WHICH WILL BE REQUIRED.

Plotted Date: 8/15/2019

DESIGNER/DRAFTER: SPM

CHECKED BY: RIB

SCALE AS NOTED

STATE OF CONNECTICUT
DEPARTMENT OF TRANSPORTATION

Filename: ...\13_Abutment & Wingwall Plan and Elevation.dgn

SIGNATURE/ BLOCK:

OFFICE OF ENGINEERING

APPROVED BY:

PROJECT TITLE:

REPLACEMENT OF BR. NO. 00681 - HUNTINGTON RD. (RTE 14) OVER MERRICK BROOK

TOWN: **SCOTLAND**

DRAWING TITLE: **ABUTMENT & WINGWALL PLANS AND ELEVATIONS**

PROJECT NO. **123-066**

DRAWING NO. **S-13**

SHEET NO. **03.13**

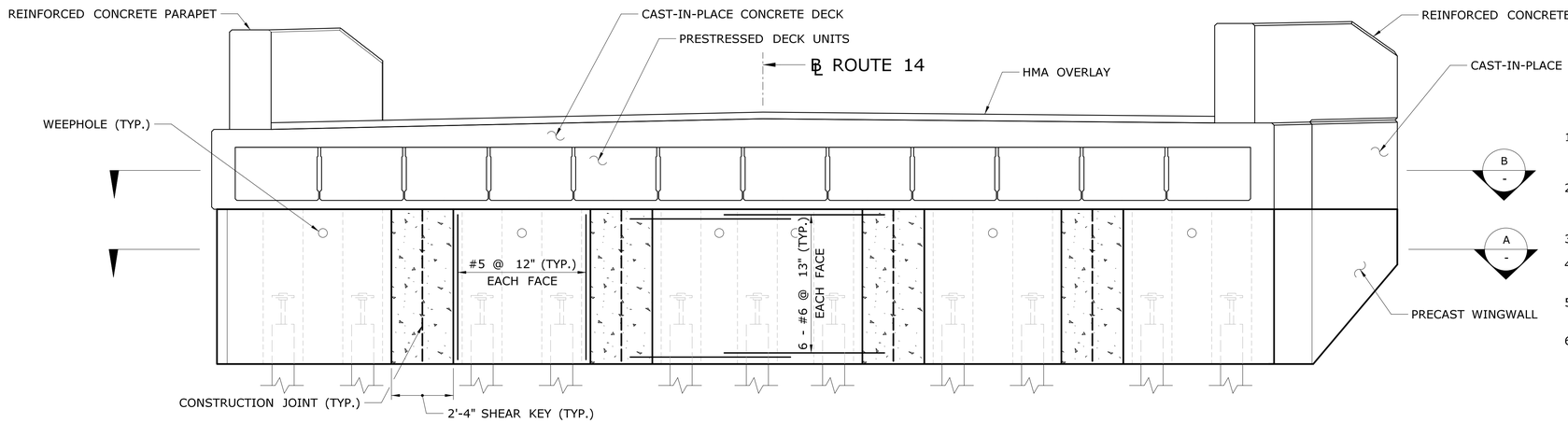

ELEVATION - ABUTMENT 1 - REINFORCING

SCALE: 3/8" = 1'-0"

REINFORCEMENT NOTES:

1. ALL REINFORCING STEEL IN THE PRECAST ABUTMENTS AND WINGWALLS, CAST-IN-PLACE WINGWALLS AND SHEAR KEYS SHALL BE ASTM A615, GRADE 60 AND SHALL BE GALVANIZED IN ACCORDANCE WITH ASTM A767, CLASS 1.
2. AT AREAS WHERE EXACT REBAR SPACING SHOWN ON THE PLANS CANNOT BE ACHIEVED, REBARS SHALL BE PLACED EVENLY AND SHALL NOT EXCEED MAXIMUM REBAR SPACING SHOWN ON THE PLANS, UNLESS OTHERWISE INDICATED.
3. USE A 3" MINIMUM COVER FOR THE STEEL REINFORCEMENT UNLESS OTHERWISE NOTED.
4. THE COST OF REINFORCEMENT WITHIN THE PRECAST ABUTMENTS AND WINGWALLS AND SHEAR KEYS SHALL BE PAID FOR UNDER THE ITEM "PRECAST SUBSTRUCTURE ELEMENTS."
5. THE COST OF REINFORCEMENT WITHIN THE CAST-IN-PLACE WINGWALLS SHALL BE PAID FOR UNDER THE ITEM "DEFORMED STEEL BARS - GALVANIZED."
6. THE SPLICE LENGTH FOR THE REINFORCEMENT IN THE WINGWALLS SHALL BE AS FOLLOWS UNLESS DIMENSIONED OTHERWISE:

BAR SIZE	SPLICE LENGTH
#5	2'-0"
#6	2'-6"
#8	3'-0"

THE SPLICES SHALL BE ALTERNATED SO THAT 50% OR LESS OF THE BARS ARE SPLICED AT THE SAME LOCATION.

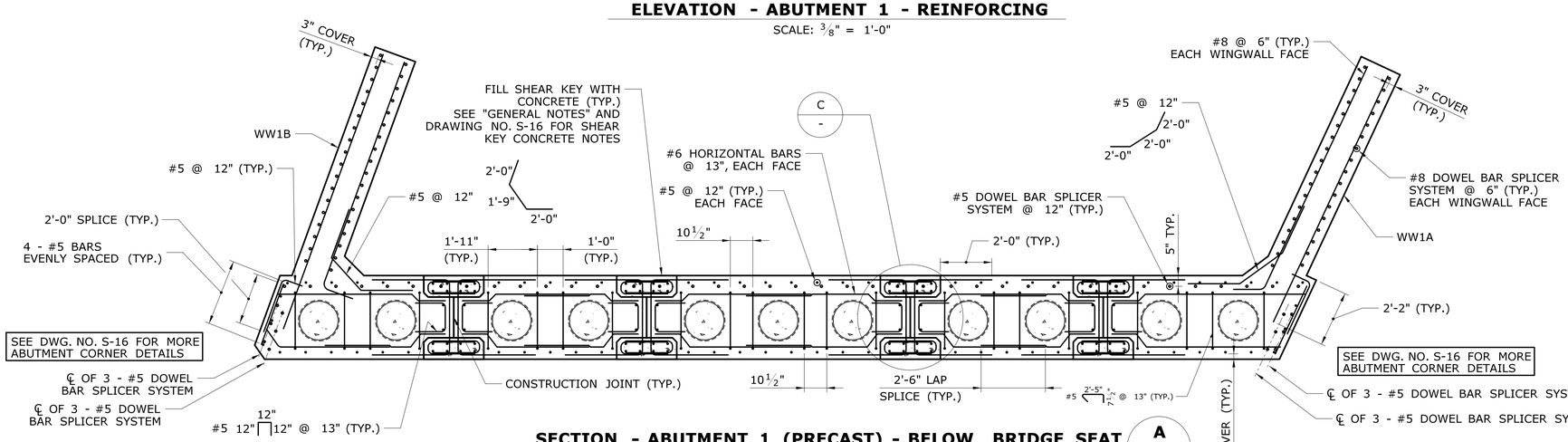

SECTION - ABUTMENT 1 (PRECAST) - BELOW BRIDGE SEAT

A
-

SCALE: 3/8" = 1'-0"

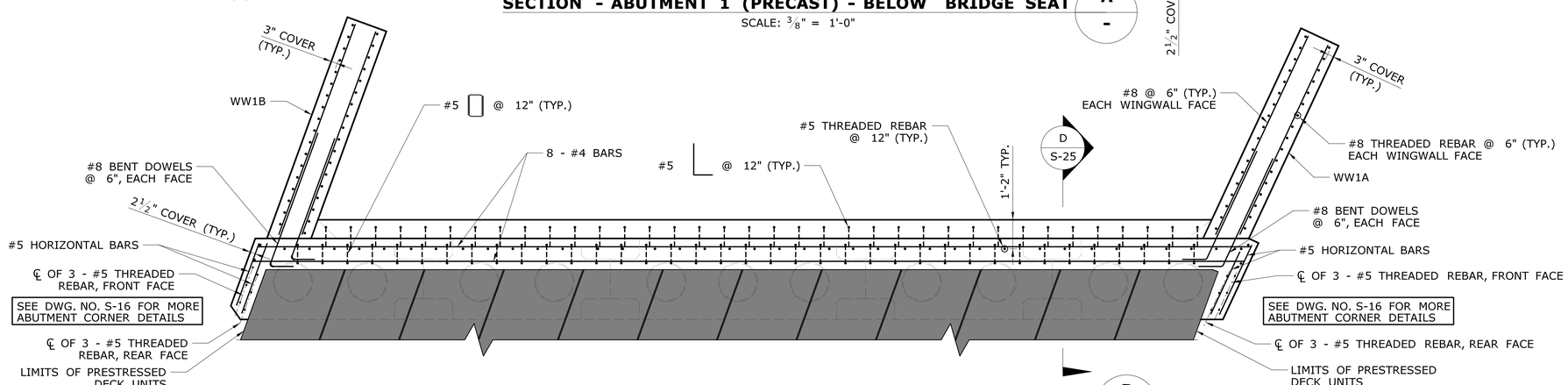

SECTION - ABUTMENT 1 (CAST-IN-PLACE) - ABOVE BRIDGE SEAT

B
-

SCALE: 3/8" = 1'-0"

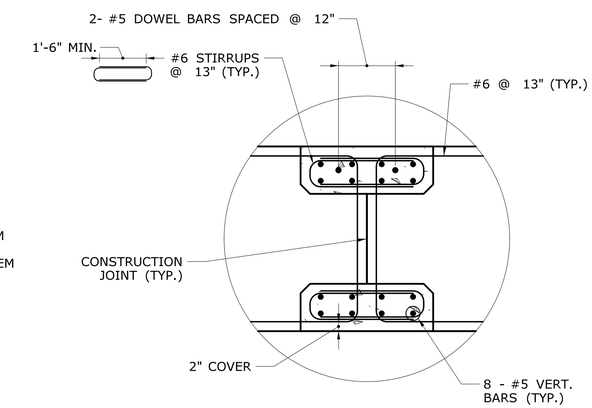

DETAIL - SHEAR KEY REINFORCING

C
-

SCALE: 3/4" = 1'-0"

REV.	DATE	REVISION DESCRIPTION	SHEET NO.

THE INFORMATION, INCLUDING ESTIMATED QUANTITIES OF WORK, SHOWN ON THESE SHEETS IS BASED ON LIMITED INVESTIGATIONS BY THE STATE AND IS IN NO WAY WARRANTED TO INDICATE THE CONDITIONS OF ACTUAL QUANTITIES OF WORK WHICH WILL BE REQUIRED.

Plotted Date: 8/15/2019

DESIGNER/DRAFTER: SPM
CHECKED BY: RIB
SCALE AS NOTED

STATE OF CONNECTICUT
DEPARTMENT OF TRANSPORTATION

Filename: ...\14_Abutment 1 Reinforcement Details.dgn

SIGNATURE/BLOCK: OFFICE OF ENGINEERING
APPROVED BY: Mary E. Cook

PROJECT TITLE: REPLACEMENT OF BR. NO. 00681 - HUNTINGTON RD. (RTE 14) OVER MERRICK BROOK

TOWN: SCOTLAND

DRAWING TITLE: ABUTMENT 1 REINFORCEMENT DETAILS

PROJECT NO. 123-066
DRAWING NO. S-14
SHEET NO. 03.14

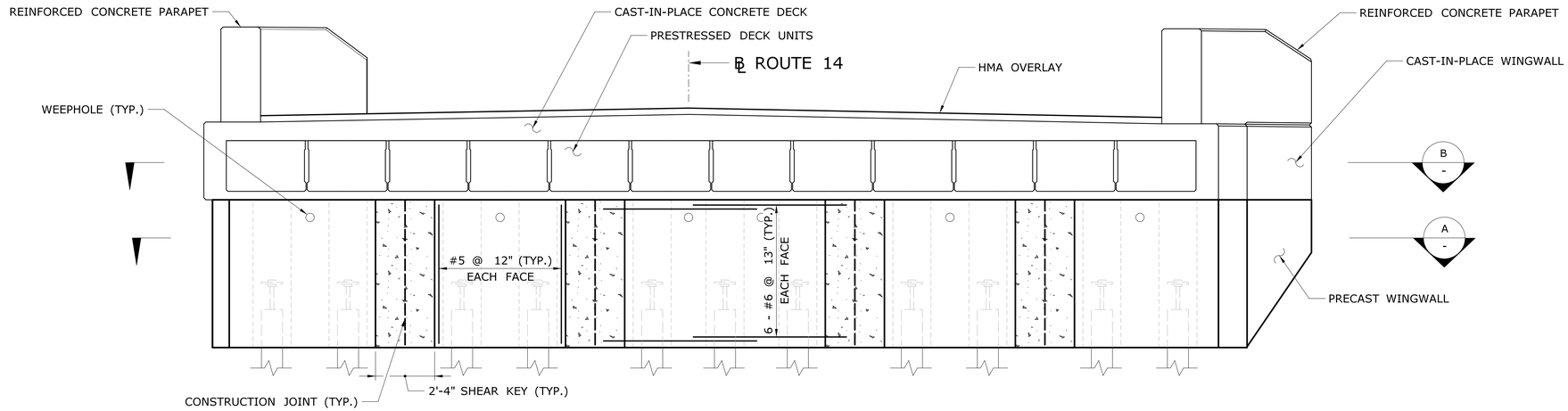

ELEVATION - ABUTMENT 2 - REINFORCING

SCALE: 3/8" = 1'-0"

SEE DWG. NO. S-14 FOR REINFORCEMENT NOTES AND SHEAR KEY DETAILS

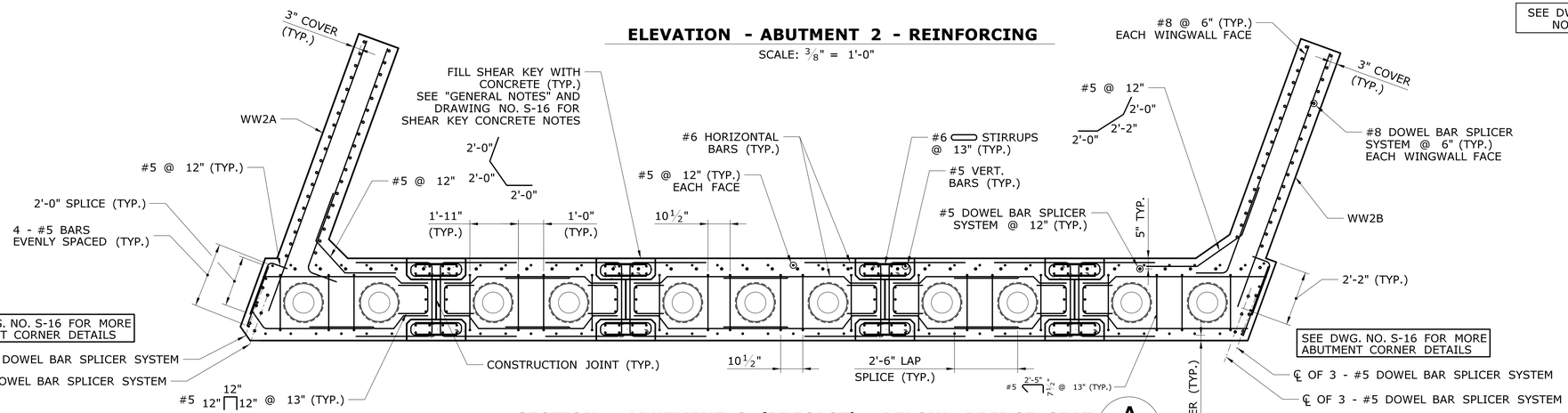

SECTION - ABUTMENT 2 (PRECAST) - BELOW BRIDGE SEAT

A / -

SCALE: 3/8" = 1'-0"

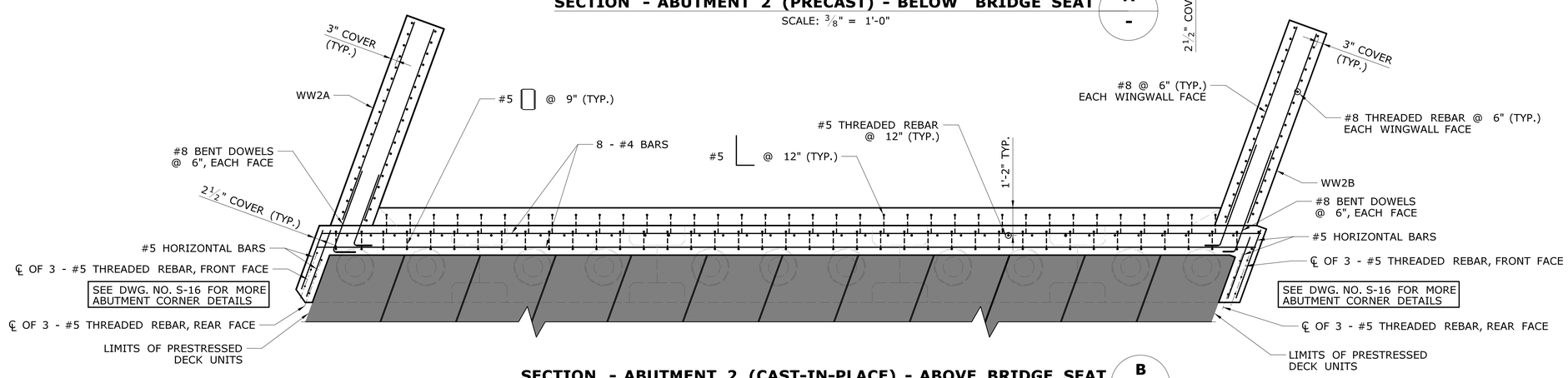

SECTION - ABUTMENT 2 (CAST-IN-PLACE) - ABOVE BRIDGE SEAT

B / -

SCALE: 3/8" = 1'-0"

REV.	DATE	REVISION DESCRIPTION	SHEET NO.

THE INFORMATION, INCLUDING ESTIMATED QUANTITIES OF WORK, SHOWN ON THESE SHEETS IS BASED ON LIMITED INVESTIGATIONS BY THE STATE AND IS IN NO WAY WARRANTED TO INDICATE THE CONDITIONS OF ACTUAL QUANTITIES OF WORK WHICH WILL BE REQUIRED.

Plotted Date: 8/16/2019

DESIGNER/DRAFTER: SPM
CHECKED BY: RIB
SCALE AS NOTED

STATE OF CONNECTICUT
DEPARTMENT OF TRANSPORTATION

Filename: ...\15_Abutment 2 Reinforcement Details.dgn

SIGNATURE/ BLOCK:
OFFICE OF ENGINEERING
APPROVED BY:

PROJECT TITLE:
REPLACEMENT OF BR. NO. 00681 - HUNTINGTON RD. (RTE 14) OVER MERRICK BROOK

TOWN: SCOTLAND

DRAWING TITLE: ABUTMENT 2 REINFORCEMENT DETAILS

PROJECT NO. 123-066
DRAWING NO. S-15
SHEET NO. 03.15

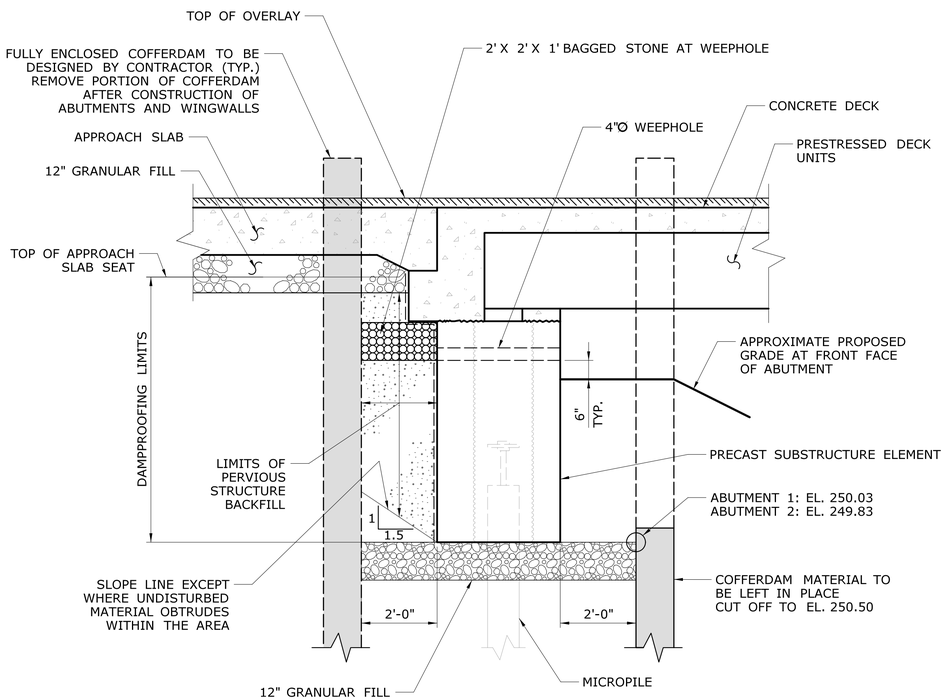

TYPICAL SECTION - ABUTMENT

SCALE: ½" = 1'-0"

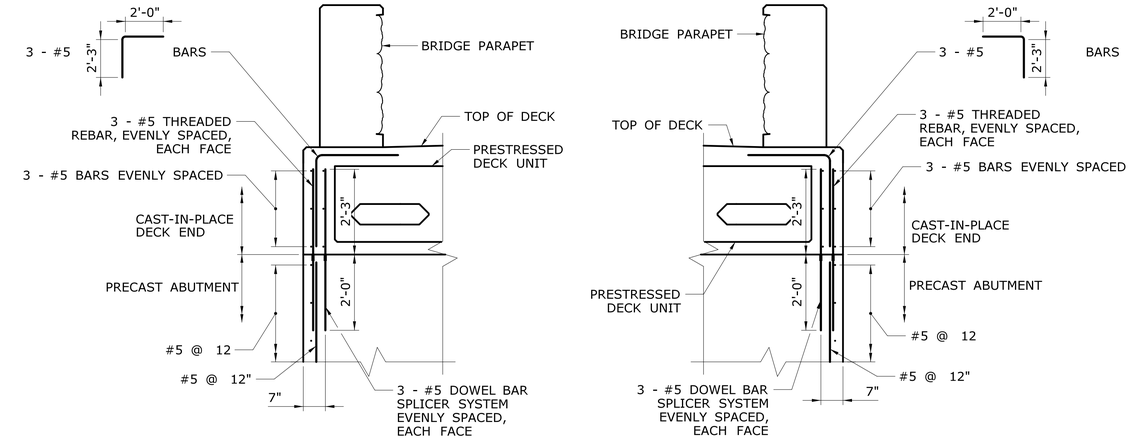

ABUTMENT CORNER DETAIL

SCALE: ½" = 1'-0"
(ABUTMENT 1 SHOWN ABUTMENT 2 SIMILAR)

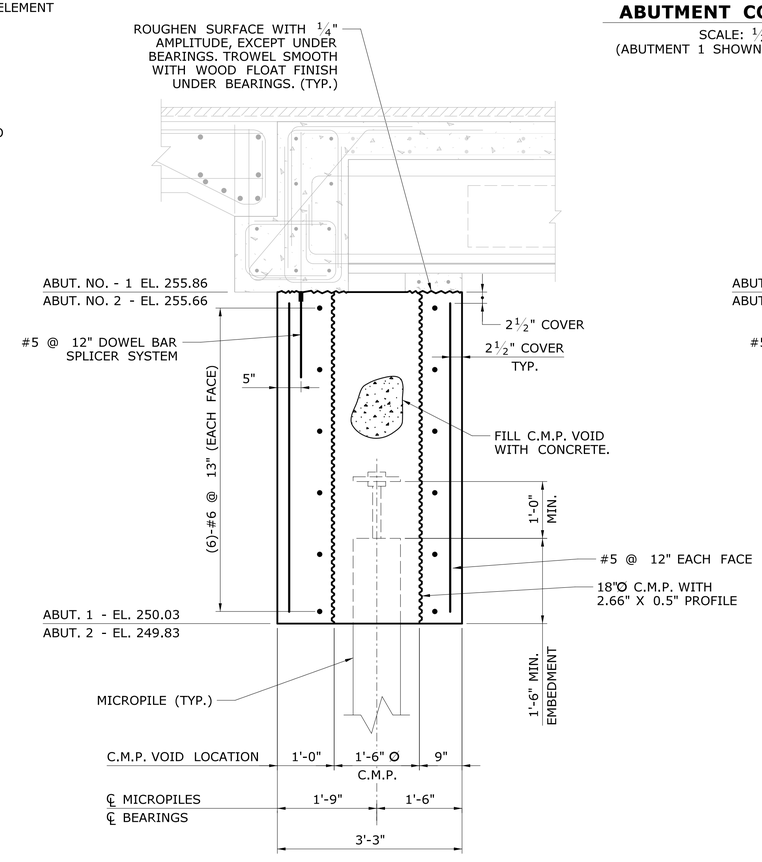

TYPICAL ABUTMENT REINFORCING AT VOID

SCALE: ¾" = 1'-0"

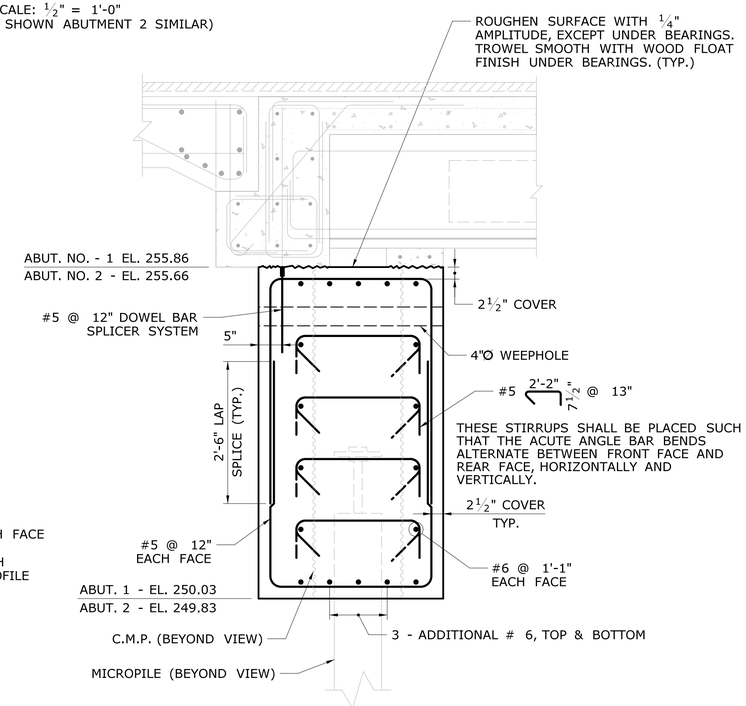

TYPICAL ABUTMENT REINFORCING

SCALE: ¾" = 1'-0"

ABUTMENT CONCRETE NOTES:

1. THE CONCRETE MIX FOR PRECAST ABUTMENTS, ABUTMENT STEM VOIDS AND SHEAR KEYS SHALL BE CLASS PCC05560 AND SHALL BE PAID FOR UNDER THE ITEM "PRECAST SUBSTRUCTURE ELEMENTS."
2. THE COST OF CORRUGATED METAL PIPE VOID FORMS SHALL ALSO BE INCLUDED FOR PAYMENT UNDER THE ITEM "PRECAST SUBSTRUCTURE ELEMENTS."
3. CONCRETE USED TO FILL VOIDS AND TO CONSTRUCT SHEAR KEYS SHALL ATTAIN A MINIMUM COMPRESIVE STRENGTH OF 4,000 PSI PRIOR TO INSTALLATION OF THE PRESTRESSED DECK UNITS.

REV.	DATE	REVISION DESCRIPTION	SHEET NO.

THE INFORMATION, INCLUDING ESTIMATED QUANTITIES OF WORK, SHOWN ON THESE SHEETS IS BASED ON LIMITED INVESTIGATIONS BY THE STATE AND IS IN NO WAY WARRANTED TO INDICATE THE CONDITIONS OF ACTUAL QUANTITIES OF WORK WHICH WILL BE REQUIRED.

Plotted Date: 7/23/2019

DESIGNER/DRAFTER: SPM
CHECKED BY: RIB
SCALE AS NOTED

STATE OF CONNECTICUT
DEPARTMENT OF TRANSPORTATION

Filename: ...\16_Abutment Details.dgn

SIGNATURE/BLOCK:
OFFICE OF ENGINEERING
APPROVED BY:

PROJECT TITLE:
REPLACEMENT OF BR. NO. 00681 - HUNTINGTON AVE. (RTE 14) OVER MERRICK BROOK

TOWN: SCOTLAND

DRAWING TITLE: ABUTMENT DETAILS

PROJECT NO. 123-066
DRAWING NO. S-16
SHEET NO. 03.16

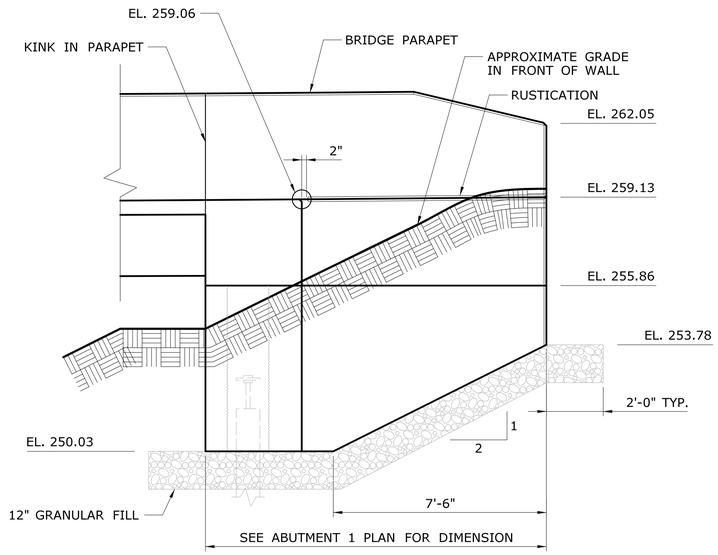

ELEVATION - WW1A

SCALE: 3/8" = 1'-0"

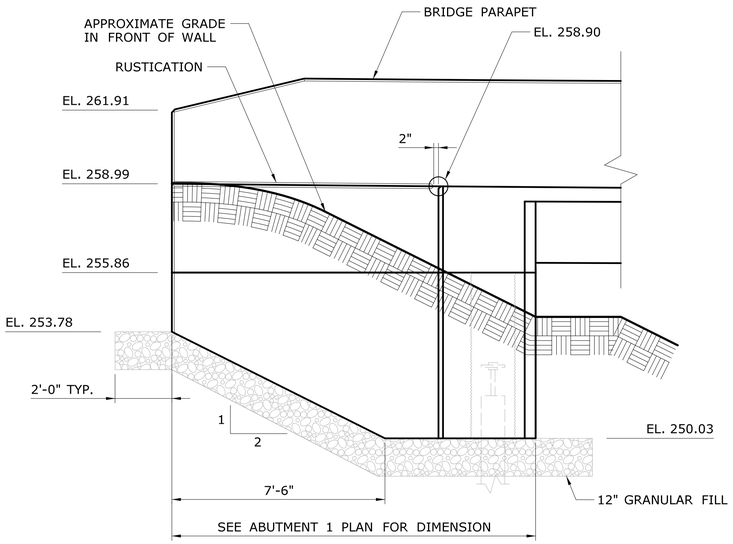

ELEVATION - WW1B

SCALE: 3/8" = 1'-0"

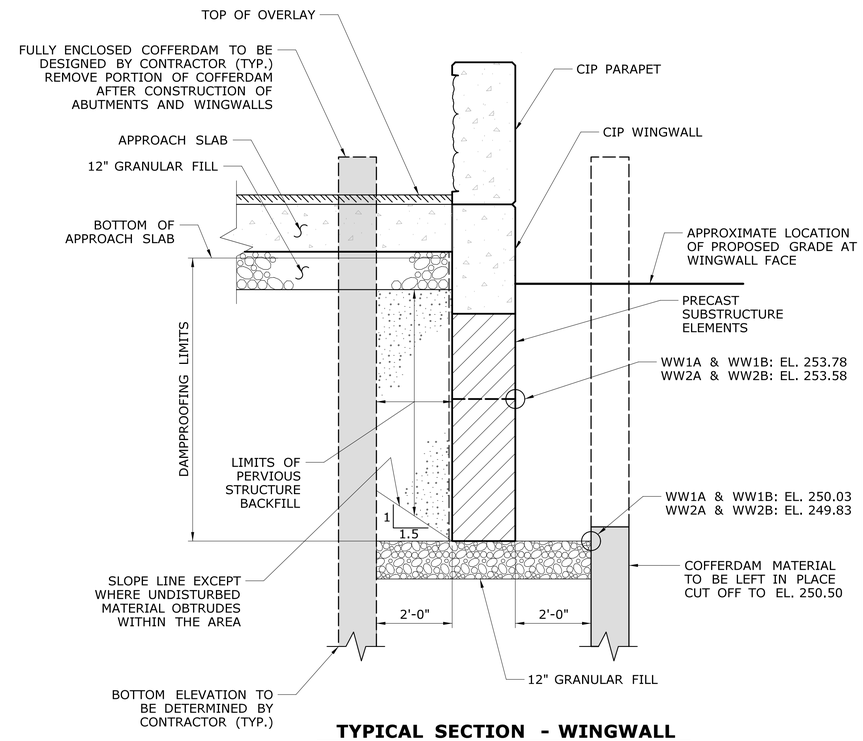

TYPICAL SECTION - WINGWALL

SCALE: 1/2" = 1'-0"

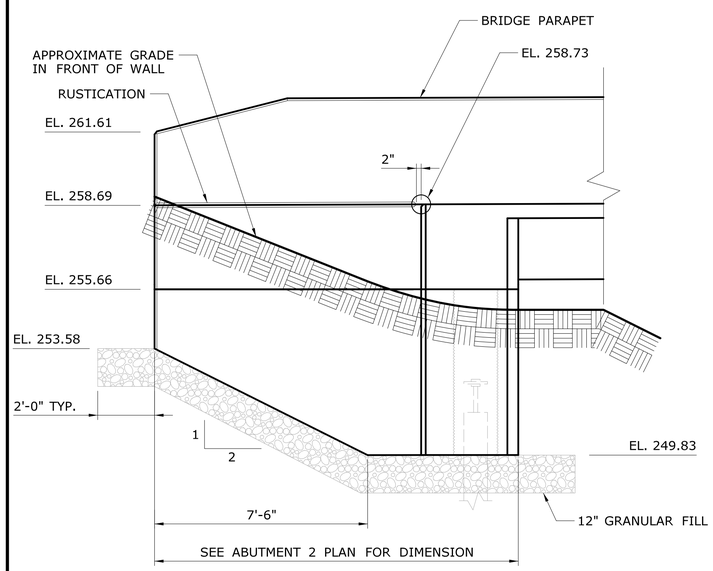

ELEVATION - WW2A

SCALE: 3/8" = 1'-0"

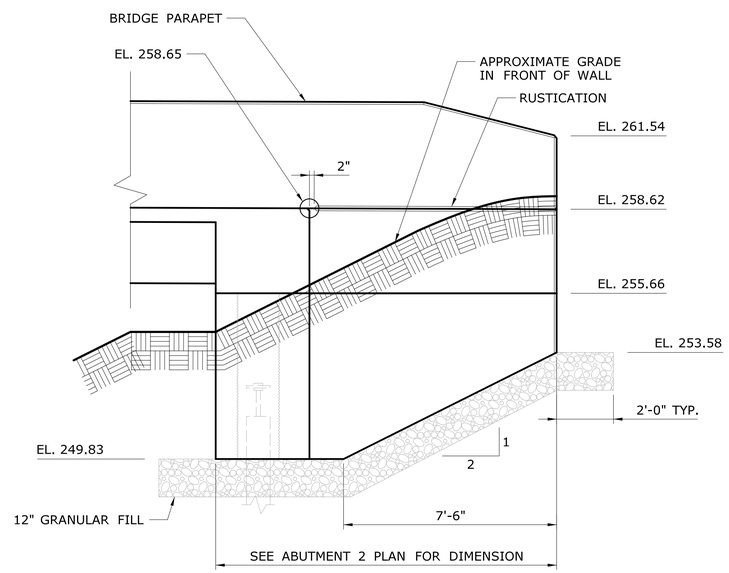

ELEVATION - WW2B

SCALE: 3/8" = 1'-0"

REV.	DATE	REVISION DESCRIPTION	SHEET NO.

THE INFORMATION, INCLUDING ESTIMATED QUANTITIES OF WORK, SHOWN ON THESE SHEETS IS BASED ON LIMITED INVESTIGATIONS BY THE STATE AND IS IN NO WAY WARRANTED TO INDICATE THE CONDITIONS OF ACTUAL QUANTITIES OF WORK WHICH WILL BE REQUIRED.

Plotted Date: 7/23/2019

DESIGNER/DRAFTER: SPM

CHECKED BY: RIB

SCALE AS NOTED

STATE OF CONNECTICUT
DEPARTMENT OF TRANSPORTATION

Filename: ...\17_Wingwall Details.dgn

SIGNATURE/BLOCK: OFFICE OF ENGINEERING

APPROVED BY: Mary E. Beck

PROJECT TITLE: REPLACEMENT OF BR. NO. 00681 - HUNTINGTON RD. (RTE 14) OVER MERRICK BROOK

TOWN: SCOTLAND

DRAWING TITLE: WINGWALL DETAILS

PROJECT NO. 123-066

DRAWING NO. S-17

SHEET NO. 03.17

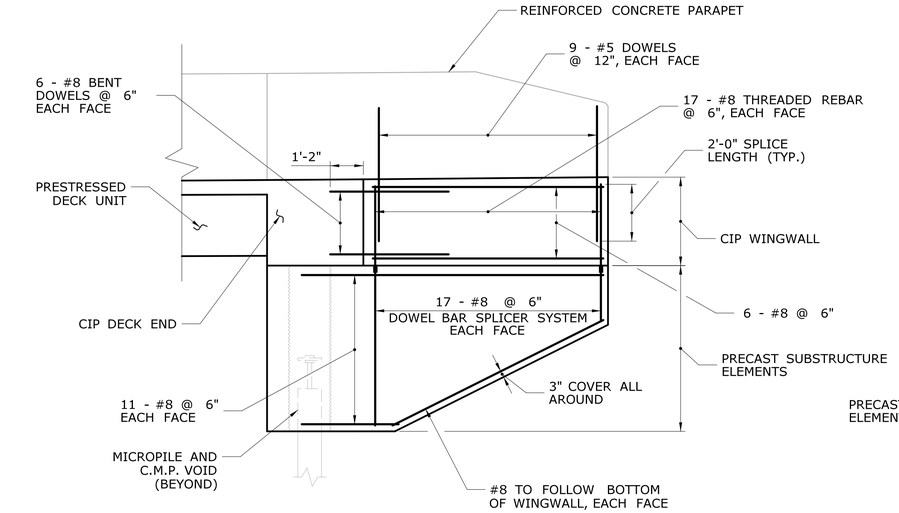

ELEVATION - WW1A REINFORCEMENT

SCALE: 3/8" = 1'-0"

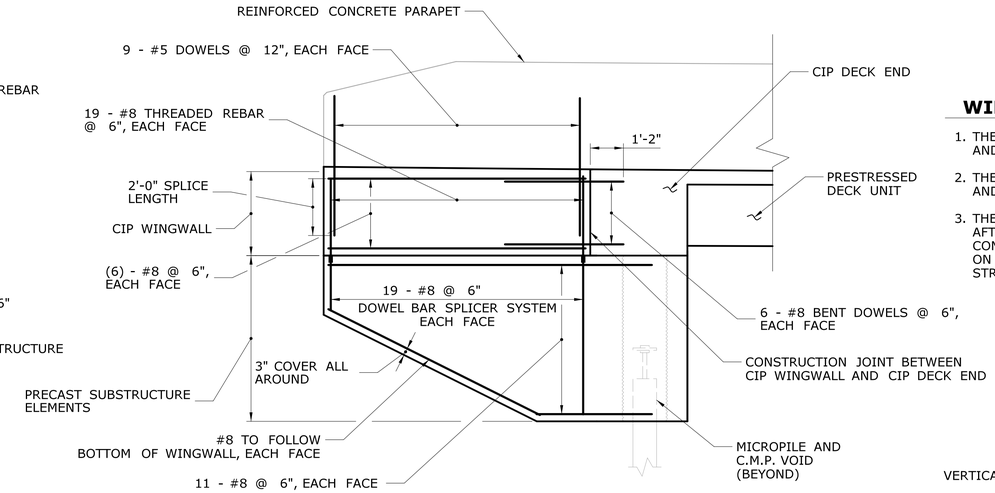

ELEVATION - WW1B

SCALE: 3/8" = 1'-0"

WINGWALL CONCRETE NOTES:

1. THE CONCRETE MIX FOR PRECAST WINGWALLS SHALL BE CLASS PCC05560 AND SHALL BE PAID FOR UNDER THE ITEM "PRECAST SUBSTRUCTURE ELEMENTS."
2. THE CONCRETE MIX FOR CAST-IN-PLACE WINGWALLS SHALL BE CLASS PCC05560 AND SHALL BE PAID FOR UNDER THE ITEM "ABUTMENT AND WALL CONCRETE."
3. THE CONTRACTOR SHALL START BACKFILLING THE WALL SECTIONS ONLY AFTER THE CAST-IN-PLACE WINGWALL CONCRETE HAS REACHED A MINIMUM COMPRESSIVE STRENGTH OF Fc' = 3,000 PSI. LIVE LOADS SHALL BE PERMITTED ON THE WALL ONLY AFTER THE CONCRETE HAS ATTAINED A MINIMUM COMPRESSIVE STRENGTH OF Fc' = 5500 PSI.

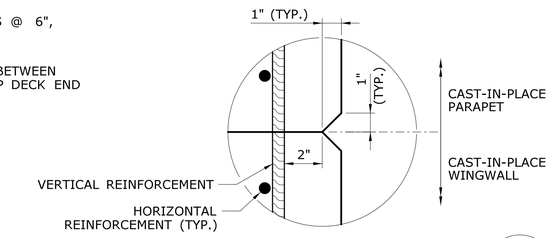

TYPICAL RUSTICATION DETAIL

SCALE: 3" = 1'-0"

A
-

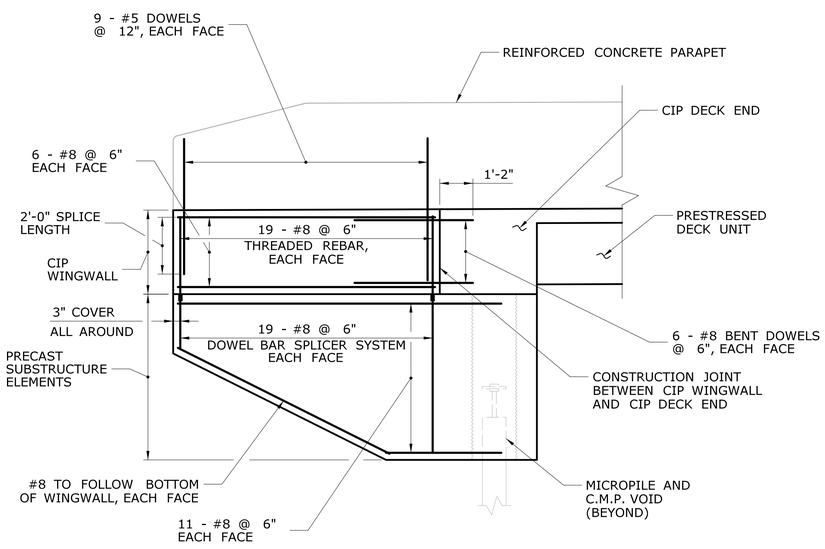

ELEVATION - WW2A

SCALE: 3/8" = 1'-0"

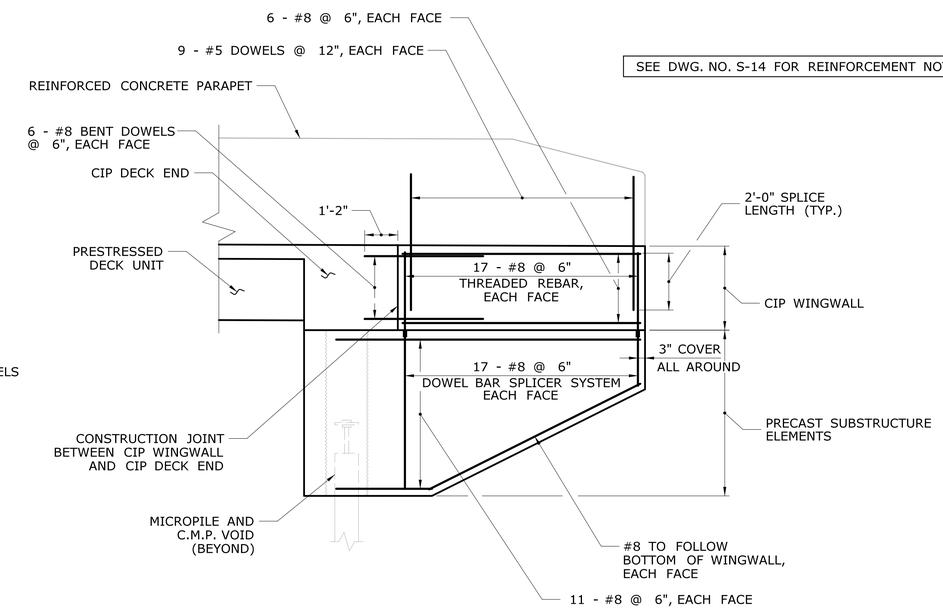

ELEVATION - WW2B

SCALE: 3/8" = 1'-0"

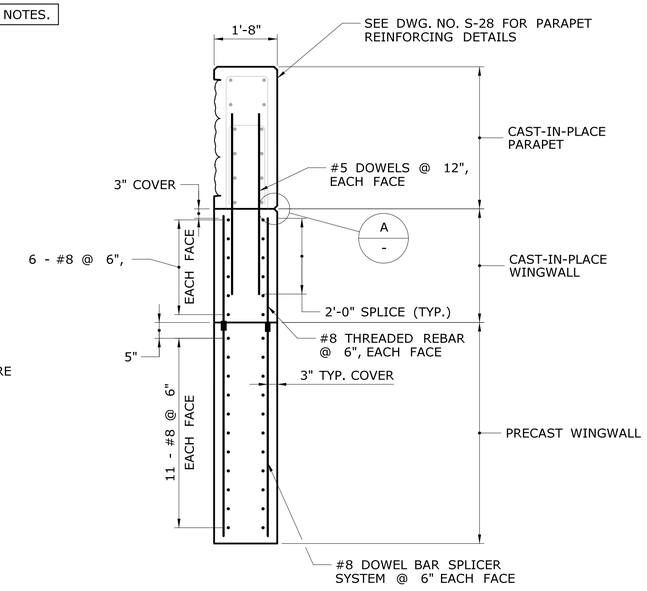

SECTION - TYPICAL WINGWALL REINFORCING

SCALE: 1/2" = 1'-0"

REV.	DATE	REVISION DESCRIPTION	SHEET NO.

THE INFORMATION, INCLUDING ESTIMATED QUANTITIES OF WORK, SHOWN ON THESE SHEETS IS BASED ON LIMITED INVESTIGATIONS BY THE STATE AND IS IN NO WAY WARRANTED TO INDICATE THE CONDITIONS OF ACTUAL QUANTITIES OF WORK WHICH WILL BE REQUIRED.

Plotted Date: 8/15/2019

DESIGNER/DRAFTER: SPM
CHECKED BY: RIB
SCALE AS NOTED

STATE OF CONNECTICUT
DEPARTMENT OF TRANSPORTATION

Filename: ...\18_Wingwall Reinforcement Details.dgn

SIGNATURE/BLOCK: OFFICE OF ENGINEERING
APPROVED BY: Mary E. Cook

PROJECT TITLE: REPLACEMENT OF BR. NO. 00681 - HUNTINGTON RD. (RTE 14) OVER MERRICK BROOK

TOWN: SCOTLAND

DRAWING TITLE: WINGWALL REINFORCEMENT DETAILS

PROJECT NO. 123-066
DRAWING NO. S-18
SHEET NO. 03.18

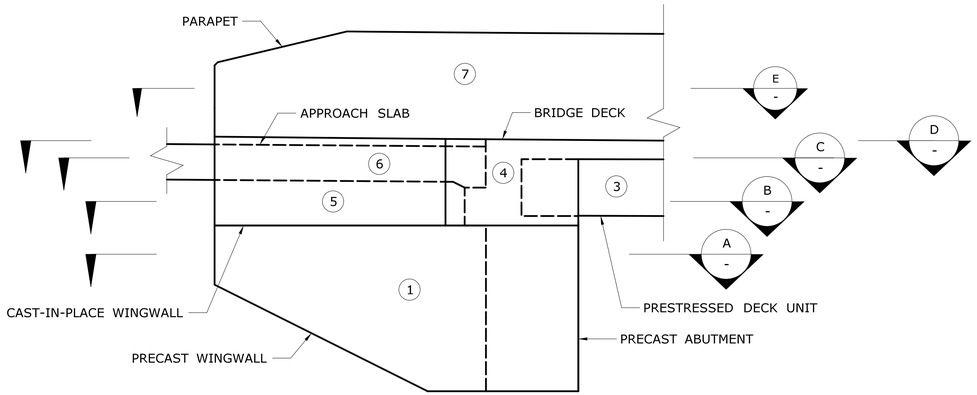

TYPICAL ABUTMENT AND WINGWALL ELEVATION

NOT TO SCALE

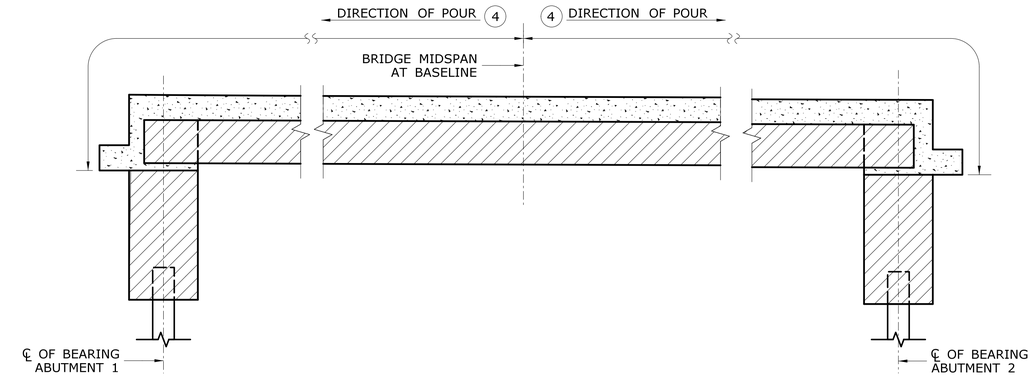

SECTION - DECK POURING SEQUENCE

NOT TO SCALE

LEGEND

PRECAST CONCRETE

CAST-IN-PLACE CONCRETE

INTEGRAL ABUTMENT POUR SEQUENCE

1. PRECAST SUBSTRUCTURE ELEMENTS
2. ABUTMENT STEM VOIDS AND SHEAR KEYS
3. PRESTRESSED DECK UNITS
4. BRIDGE DECK CONCRETE
5. ABUTMENT AND WALL CONCRETE
6. APPROACH SLAB CONCRETE
7. PARAPET CONCRETE

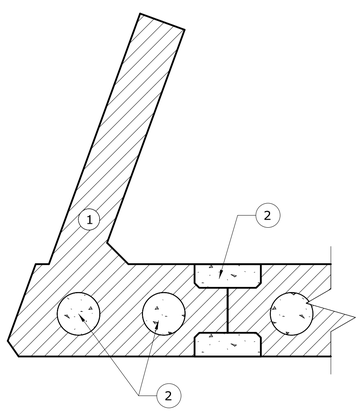

SECTION - POUR SEQUENCE A

SCALE: 3/8" = 1'-0"

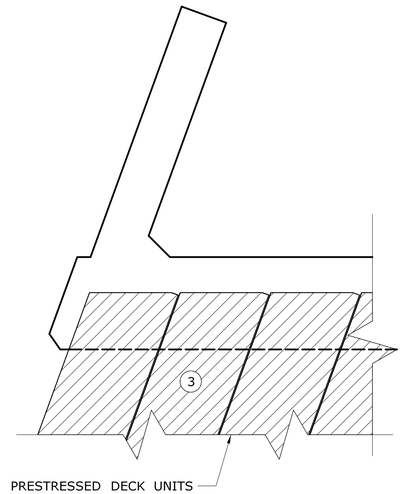

SECTION - POUR SEQUENCE B

SCALE: 3/8" = 1'-0"

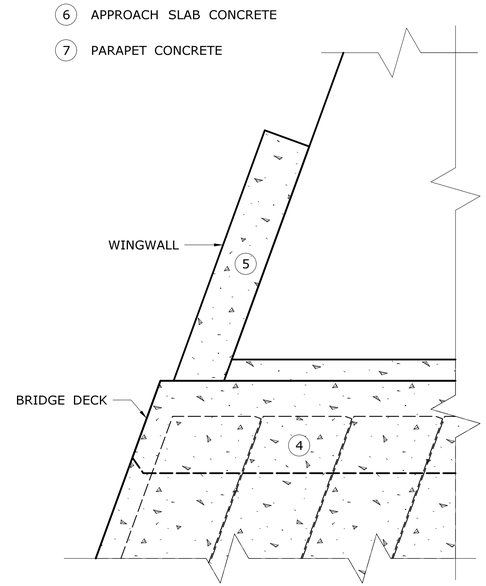

SECTION - POUR SEQUENCE C

SCALE: 3/8" = 1'-0"

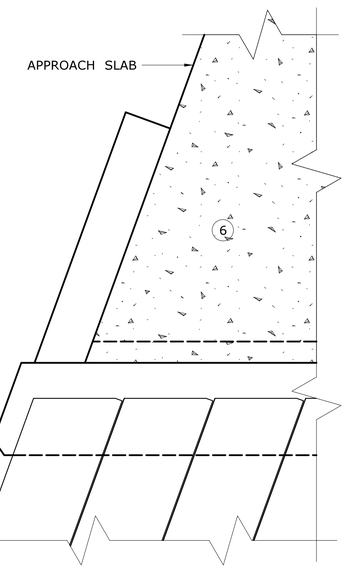

SECTION - POUR SEQUENCE D

SCALE: 3/8" = 1'-0"

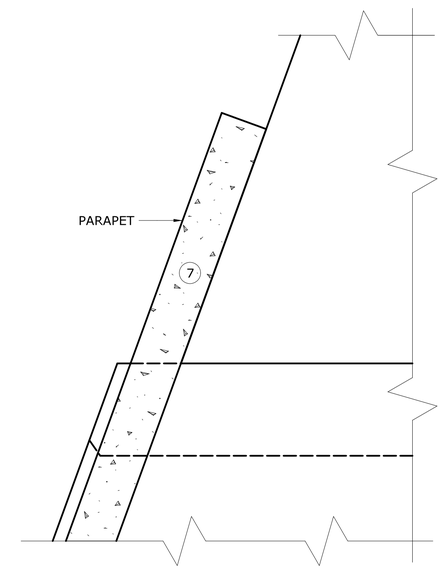

SECTION - POUR SEQUENCE E

SCALE: 3/8" = 1'-0"

REV.	DATE	REVISION DESCRIPTION	SHEET NO.

THE INFORMATION, INCLUDING ESTIMATED QUANTITIES OF WORK, SHOWN ON THESE SHEETS IS BASED ON LIMITED INVESTIGATIONS BY THE STATE AND IS IN NO WAY WARRANTED TO INDICATE THE CONDITIONS OF ACTUAL QUANTITIES OF WORK WHICH WILL BE REQUIRED.

Plotted Date: 8/15/2019

DESIGNER/DRAFTER: SPM

CHECKED BY: RIB

SCALE AS NOTED

STATE OF CONNECTICUT
DEPARTMENT OF TRANSPORTATION

Filename: ..\19_Pour Sequence.dgn

SIGNATURE/BLOCK:
OFFICE OF ENGINEERING

APPROVED BY:

PROJECT TITLE:
REPLACEMENT OF BR. NO. 00681 - HUNTINGTON RD. (RTE 14) OVER MERRICK BROOK

TOWN: SCOTLAND

DRAWING TITLE: POUR SEQUENCE

PROJECT NO. 123-066

DRAWING NO. S-19

SHEET NO. 03.19

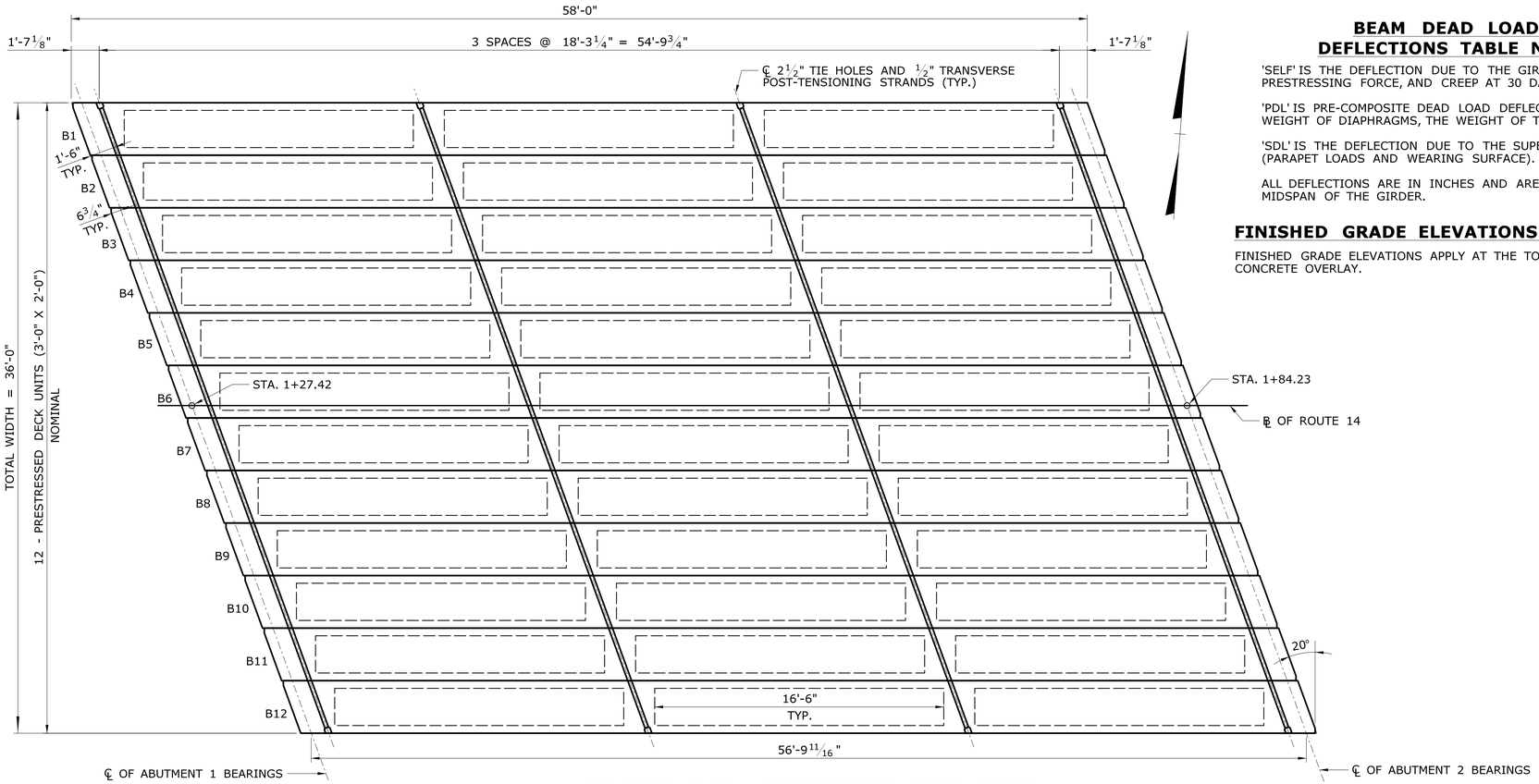

FRAMING PLAN - PRESTRESSED DECK UNITS

SCALE: ¼" = 1'-0

BEAM DEAD LOAD DEFLECTIONS TABLE NOTES:

'SELF' IS THE DEFLECTION DUE TO THE GIRDER SELF-WEIGHT, PRESTRESSING FORCE, AND CREEP AT 30 DAYS.

'PDL' IS PRE-COMPOSITE DEAD LOAD DEFLECTION DUE TO THE WEIGHT OF DIAPHRAGMS, THE WEIGHT OF THE CONCRETE DECK.

'SDL' IS THE DEFLECTION DUE TO THE SUPERIMPOSED DEAD LOAD (PARAPET LOADS AND WEARING SURFACE).

ALL DEFLECTIONS ARE IN INCHES AND ARE COMPUTED AT THE MIDSPAN OF THE GIRDER.

FINISHED GRADE ELEVATIONS TABLE NOTES:

FINISHED GRADE ELEVATIONS APPLY AT THE TOP OF FINAL BITUMINOUS CONCRETE OVERLAY.

BEAM NO.	ESTIMATED CAMBER AT MIDSPAN (INCHES)		
	AT TRANSFER	AT ERECTION	FINAL
B1	0.92	1.288	0.235
B2	0.94	1.312	0.430
B3	0.94	1.312	0.398
B4	0.94	1.312	0.366
B5	0.94	1.312	0.334
B6	0.94	1.312	0.304
B7	0.94	1.312	0.318
B8	0.94	1.312	0.350
B9	0.94	1.312	0.381
B10	0.94	1.312	0.413
B11	0.94	1.312	0.445
B12	0.92	1.288	0.235

CAMBER NOTES:

AT TRANSFER: CAMBER DUE TO PRESTRESS FORCE AT TRANSFER MINUS THE DEFLECTION DUE TO BEAM WEIGHT.

AT ERECTION: CAMBER (DUE TO PRESTRESS FORCE AT TRANSFER MINUS THE DEFLECTION DUE TO BEAM WEIGHT) THAT IS PRESENT AT APPROXIMATELY 30 DAYS AFTER TRANSFER.

FINAL: LONG-TERM CAMBER THAT IS PRESENT AFTER ALL DEAD LOADS ARE APPLIED TO THE STRUCTURE AND AFTER LONG TERM CREEP AND RELAXATION HAVE TAKEN PLACE.

BEAM NO.	DEAD LOAD DEFLECTIONS AT MIDSPAN (INCHES)		
	SELF	PDL	SDL
B1	0.837	1.181	0.297
B2	0.688	1.003	0.312
B3	0.688	1.035	0.312
B4	0.688	1.067	0.312
B5	0.688	1.099	0.312
B6	0.688	1.129	0.312
B7	0.688	1.115	0.312
B8	0.688	1.084	0.312
B9	0.688	1.052	0.312
B10	0.688	1.020	0.312
B11	0.688	0.988	0.312
B12	0.837	1.181	0.297

PRESTRESSED DECK UNITS NOTES

THE CONCRETE FOR THE PRESTRESSED DECK UNITS SHALL CONFORM TO THE FOLLOWING REQUIREMENTS:

- MINIMUM COMPRESSIVE STRENGTH AT TRANSFER, f'ci= 6 KSI
- MINIMUM 28 DAY COMPRESSIVE STRENGTH, f'c = 10 KSI

THE PRESTRESSING STRANDS SHALL BE 0.6" DIAMETER, 7 WIRE, UNCOATED, LOW RELAXATION STRANDS, CONFORMING TO THE REQUIREMENTS OF AASHTO M203 (ASTM A416), GRADE 270 (ULTIMATE STRENGTH, F's = 270 KSI). THE STRANDS SHALL HAVE AN INITIAL JACKING TENSION, Fj, OF 44 KIPS PER STRAND.

ALL NON-PRESTRESSED REINFORCEMENT INCLUDING DOWEL BAR SPLICERS SHALL BE GALVANIZED AND CONFORM TO ASTM A615, GRADE 60 AND SHALL HAVE A MINIMUM COVER OF 2" UNLESS OTHERWISE NOTED. ALL REINFORCEMENT IN THE PRESTRESSED MEMBERS, INCLUDING REINFORCEMENT PROJECTING OUT OF THE MEMBERS AND DOWEL BAR SPLICERS, SHALL BE PAID FOR UNDER THE ITEM "PRESTRESSED DECK UNITS (3'-0" X 2'-0")."

THE FABRICATOR IS FULLY RESPONSIBLE FOR THE DESIGN OF THE LIFTING DEVICES, WHICH SHALL BE ADEQUATE FOR THE SAFETY FACTORS REQUIRED BY THE ERECTION PROCEDURE.

THE DRILLING OF HOLES IN THE PRESTRESSED DECK UNITS OR THE USE OF POWER ACTUATED TOOLS ON THE PRESTRESSED DECK UNITS SHALL NOT BE PERMITTED.

THE CONTRACTOR MAY CHOOSE TO INSTALL THREADED INSERTS IN THE DECK UNITS TO ATTACH ANY FORMWORK TO CONSTRUCT BRIDGE DECK AND OVERHANG. THE INSERTS SHALL BE HOT-DIPPED GALVANIZED AND RECESSED BELOW THE SURFACE. AFTER THE FORMWORK IS REMOVED, THE INSERT VOIDS SHALL BE FILLED WITH NON-SHRINK GROUT MEETING THE REQUIREMENTS OF SECTION M.03.05. OF THE FORM 817. THREADED INSERTS AND NON-SHRINK GROUT SHALL BE PAID FOR UNDER THE ITEM "PRESTRESSED DECK UNITS (3'-0" X 2'-0")." THE LOCATIONS OF THE INSERTS SHALL BE DETERMINED BY THE CONTRACTOR. THE FABRICATOR SHALL VERIFY THAT THE LOCATIONS OF THE INSERTS DO NOT INTERFERE WITH THE STRANDS. THE CONTRACTOR SHALL SUBMIT WORKING DRAWINGS IN ACCORDANCE WITH SECTION 1.05.02 OF THE FORM 817 AND RECEIVE APPROVAL PRIOR TO FABRICATION.

FINISHED GRADE ELEVATIONS

BEAM NO.	SPAN (L = 56'-9 11/16")										
	℄ BEARING ABUTMENT 1	0.1L	0.2L	0.3L	0.4L	0.5L	0.6L	0.7L	0.8L	0.9L	℄ BEARING ABUTMENT 2
B1	259.290	259.226	259.176	259.138	259.113	259.092	259.071	259.050	259.029	259.008	258.987
B2	259.337	259.276	259.227	259.192	259.169	259.148	259.127	259.106	259.085	259.064	259.043
B3	259.384	259.325	259.280	259.247	259.225	259.204	259.183	259.162	259.141	259.120	259.099
B4	259.432	259.376	259.332	259.302	259.281	259.260	259.239	259.218	259.197	259.176	259.155
B5	259.480	259.426	259.386	259.358	259.337	259.316	259.295	259.274	259.253	259.232	259.211
B6	259.529	259.477	259.439	259.414	259.393	259.372	259.351	259.330	259.309	259.288	259.267
B7	259.490	259.441	259.405	259.382	259.361	259.340	259.319	259.298	259.277	259.256	259.235
B8	259.419	259.373	259.340	259.318	259.297	259.276	259.255	259.234	259.213	259.192	259.171
B9	259.349	259.305	259.275	259.253	259.233	259.212	259.191	259.170	259.149	259.128	259.107
B10	259.280	259.239	259.210	259.189	259.169	259.148	259.127	259.106	259.085	259.064	259.043
B11	259.211	259.172	259.146	259.125	259.104	259.084	259.063	259.042	259.021	259.00	258.979
B12	259.142	259.106	259.082	259.061	259.040	259.020	258.999	258.978	258.957	258.936	258.915

REV.	DATE	REVISION DESCRIPTION	SHEET NO.

THE INFORMATION, INCLUDING ESTIMATED QUANTITIES OF WORK, SHOWN ON THESE SHEETS IS BASED ON LIMITED INVESTIGATIONS BY THE STATE AND IS IN NO WAY WARRANTED TO INDICATE THE CONDITIONS OF ACTUAL QUANTITIES OF WORK WHICH WILL BE REQUIRED.

Plotted Date: 7/23/2019

DESIGNER/DRAFTER: SPM
CHECKED BY: RIB
SCALE AS NOTED

STATE OF CONNECTICUT
DEPARTMENT OF TRANSPORTATION

Filename: ...\20_Framing Plan.dgn

SIGNATURE/BLOCK:
OFFICE OF ENGINEERING
APPROVED BY:

PROJECT TITLE:
REPLACEMENT OF BR. NO. 00681 - HUNTINGTON RD. (RTE 14) OVER MERRICK BROOK

TOWN: SCOTLAND

DRAWING TITLE: FRAMING PLAN

PROJECT NO. 123-066
DRAWING NO. S-20
SHEET NO. 03.20

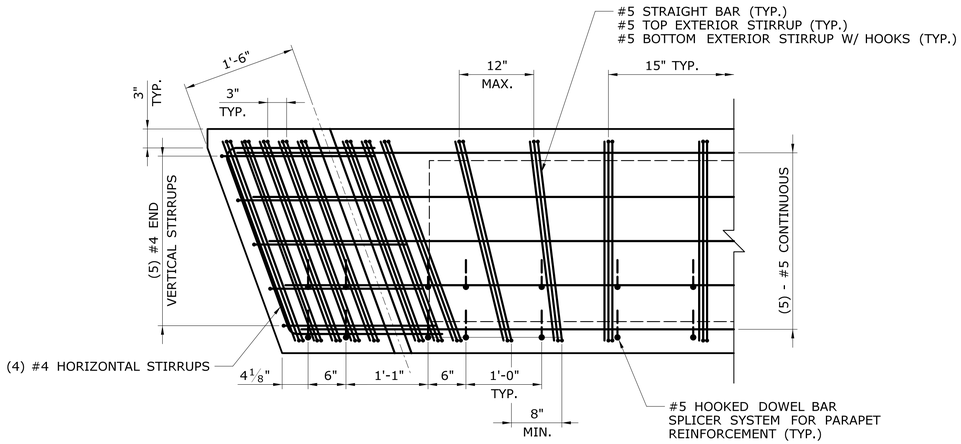

PLAN VIEW OF BEAM END - B1 & B12

SCALE: 1" = 1'-0"

SEE DRAWING NO. S-22 FOR REINFORCEMENT NOTES

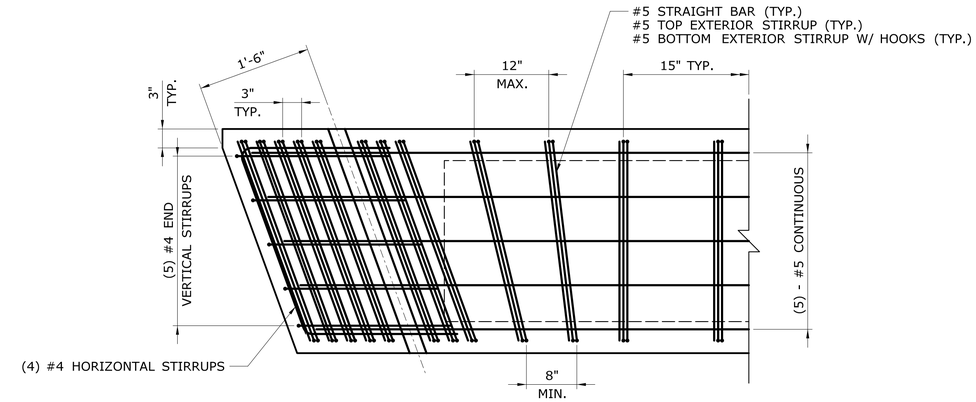

PLAN VIEW OF BEAM END - B2 THRU B11

SCALE: 1" = 1'-0"

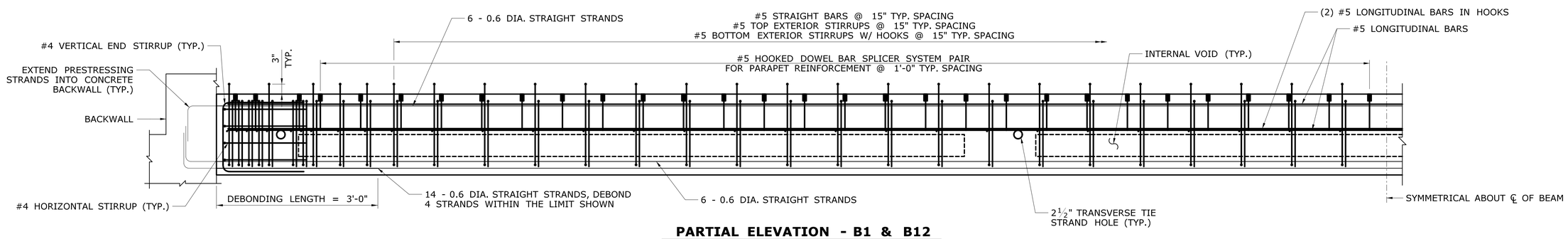

PARTIAL ELEVATION - B1 & B12

SCALE: 3/4" = 1'-0"

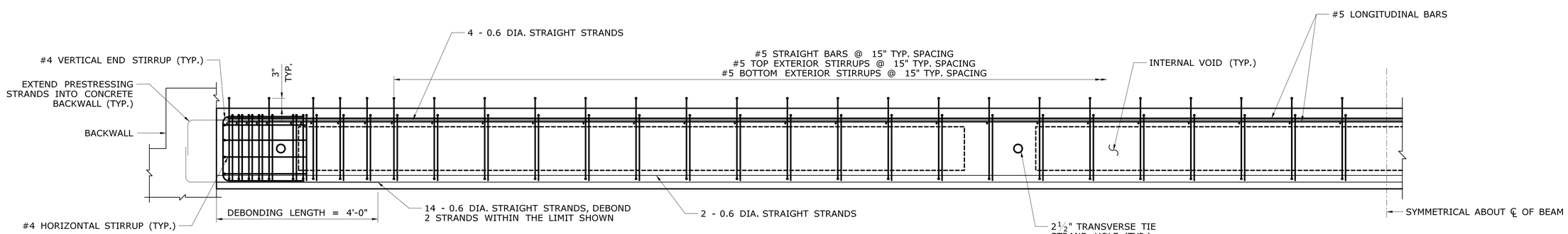

PARTIAL ELEVATION - B2 THRU B11

SCALE: 3/4" = 1'-0"

REV.	DATE	REVISION DESCRIPTION	SHEET NO.

THE INFORMATION, INCLUDING ESTIMATED QUANTITIES OF WORK, SHOWN ON THESE SHEETS IS BASED ON LIMITED INVESTIGATIONS BY THE STATE AND IS IN NO WAY WARRANTED TO INDICATE THE CONDITIONS OF ACTUAL QUANTITIES OF WORK WHICH WILL BE REQUIRED.

Plotted Date: 8/14/2019

DESIGNER/DRAFTER: SPM

CHECKED BY: RIB

SCALE AS NOTED

STATE OF CONNECTICUT
DEPARTMENT OF TRANSPORTATION

Filename: ...\21_Deck_Unit_Details_1.dgn

SIGNATURE/BLOCK: OFFICE OF ENGINEERING

APPROVED BY: Mary E. Beck

PROJECT TITLE: REPLACEMENT OF BR. NO. 00681 - HUNTINGTON RD. (RTE 14) OVER MERRICK BROOK

TOWN: SCOTLAND

DRAWING TITLE: DECK UNIT DETAILS - 1

PROJECT NO. 123-066

DRAWING NO. S-21

SHEET NO. 03.21

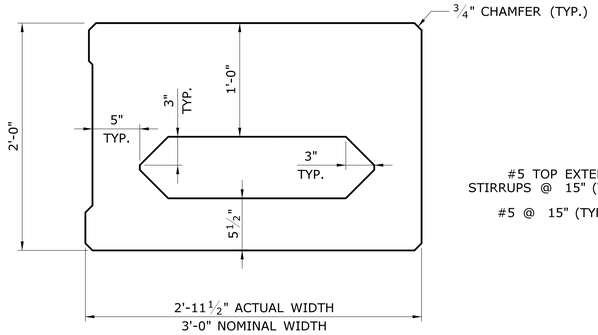

B1 & B12 - CROSS SECTION DIMENSIONS

SCALE: 1 1/2" = 1'-0"

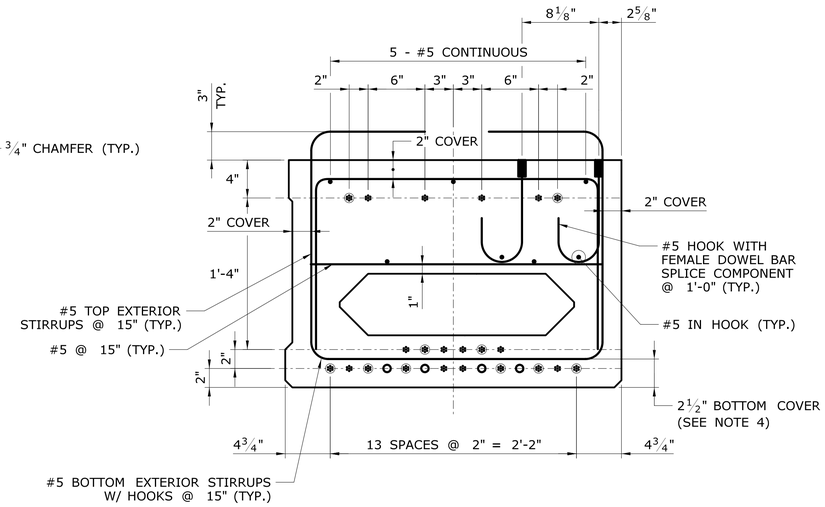

B1 & B12 - TYP. REINFORCING

SCALE: 1 1/2" = 1'-0"

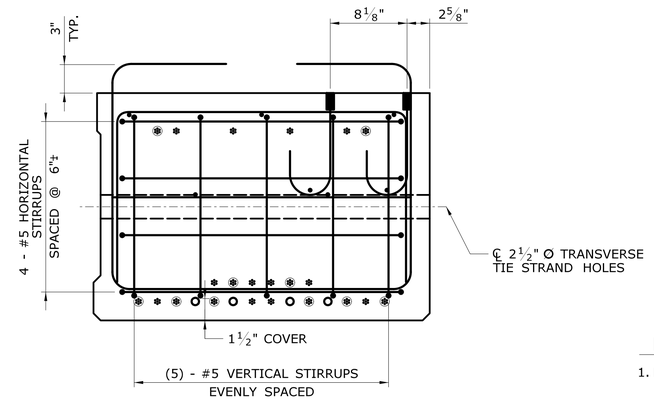

B1 & B12 - END SECTION

SCALE: 1 1/2" = 1'-0"

REINFORCEMENT NOTES:

1. PRESTRESSED STRANDS SHALL BE PLACED ON 2" CENTERS MINIMUM AND HAVE A MINIMUM 1 1/2" COVER.
2. ALL REINFORCING SHALL HAVE 2" COVER UNLESS OTHERWISE NOTED.
3. ✱ DENOTES STRAIGHT STRAND
   O DENOTES DEBONDED STRAIGHT STRAND
   ❋ DENOTES TURNED UP STRAIGHT STRAND
   ● DENOTES NON-PRESTRESSED REINFORCEMENT
4. THIS COVER IS TO FACILITATE THE PLACEMENT OF THE BOTTOM PRESTRESSING STRANDS. THE FABRICATOR MAY MODIFY COVER (1 1/2" MIN.) IF NO CONFLICT EXISTS WITH THE PRESTRESSING STRANDS.
5. EXTEND LOGITUDINAL LEGS OF HORIZONTAL STIRRUPS TO A MINIMUM DISTANCE EQUAL TO THE DEPTH OF THE BEAM OR 12" INTO THE WEB OF THE VOIDED SECTION, WHICHEVER IS GREATER.
6. HORIZONTAL LEGS OF THE VERTICAL STIRRUPS ARE EQUAL TO THE DEPTH OF THE BEAM.

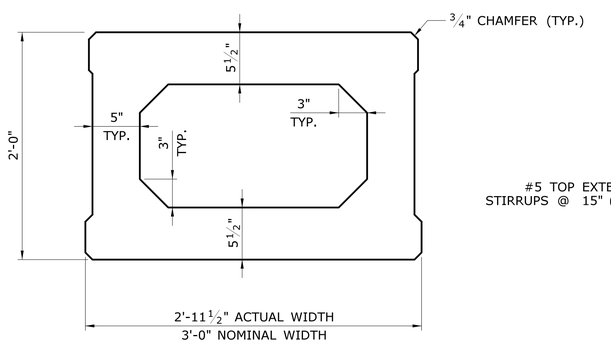

B2 THRU B11 - CROSS SECTION DIMENSIONS

SCALE: 1 1/2" = 1'-0"

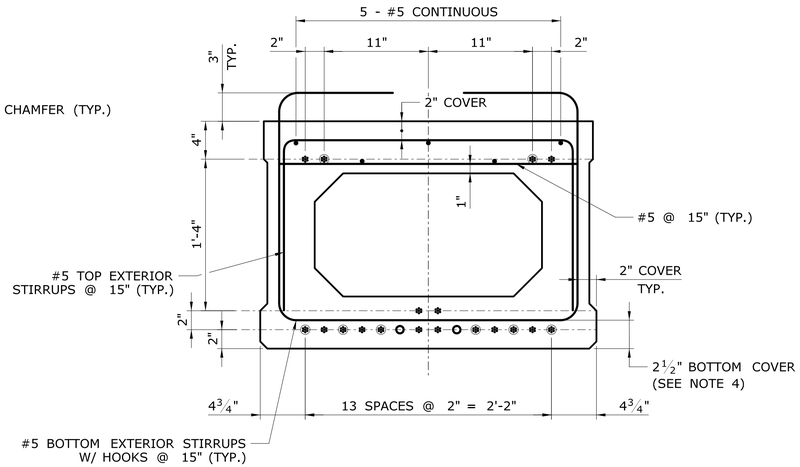

B2 THRU B11 - TYP. REINFORCING

SCALE: 1 1/2" = 1'-0"

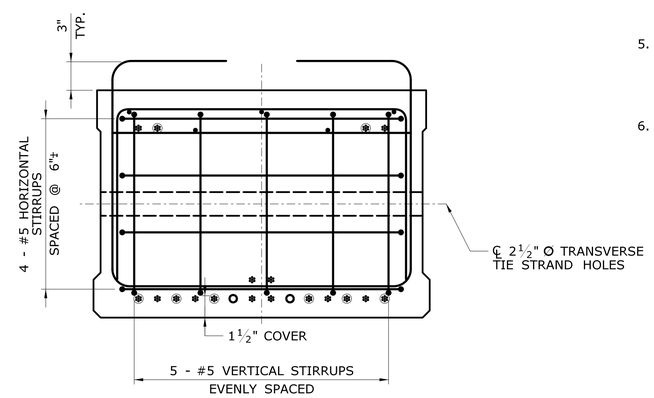

B2 THRU B11 - END SECTION

SCALE: 1 1/2" = 1'-0"

REV.	DATE	REVISION DESCRIPTION	SHEET NO.

THE INFORMATION, INCLUDING ESTIMATED QUANTITIES OF WORK, SHOWN ON THESE SHEETS IS BASED ON LIMITED INVESTIGATIONS BY THE STATE AND IS IN NO WAY WARRANTED TO INDICATE THE CONDITIONS OF ACTUAL QUANTITIES OF WORK WHICH WILL BE REQUIRED.

Plotted Date: 8/15/2019

DESIGNER/DRAFTER: SPM
CHECKED BY: RIB
SCALE AS NOTED

STATE OF CONNECTICUT
DEPARTMENT OF TRANSPORTATION

Filename: ...\22_Deck_Unit_Details_2.dgn

SIGNATURE/BLOCK: OFFICE OF ENGINEERING
APPROVED BY: Mary E. Beck

PROJECT TITLE: REPLACEMENT OF BR. NO. 00681 - HUNTINGTON RD. (RTE 14) OVER MERRICK BROOK

TOWN: SCOTLAND

DRAWING TITLE: DECK UNIT DETAILS - 2

PROJECT NO. 123-066
DRAWING NO. S-22
SHEET NO. 03.22

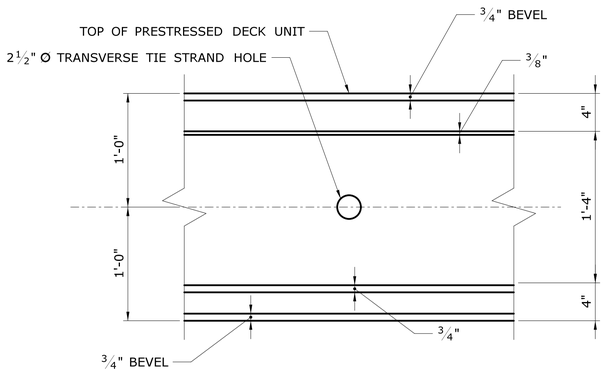

TRANSVERSE TIE LOCATION

SCALE: 1½" = 1'-0"

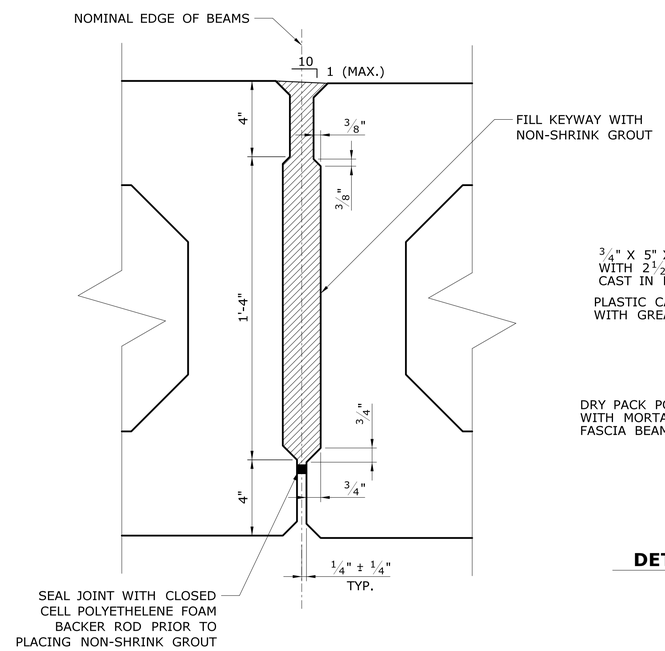

DETAIL - LONGITUDINAL JOINT

SCALE: 3" = 1'-0

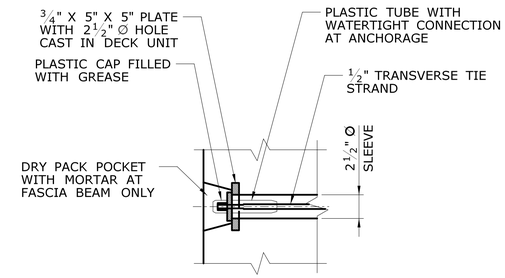

DETAIL - TRANSVERSE TIE POCKET

SCALE: 1½" = 1'-0"

TRANSVERSE TIE TENSIONING NOTES

1. AFTER ALL BEAMS HAVE BEEN ERECTED, TENSION EACH TRANSVERSE TIE TO 5 KIPS.
2. THE BOTTOM OF THE LONGITUDINAL SHEAR KEYS SHALL BE SEALED WITH CLOSED CELL POLYETHYLENE FOAM BACKER ROD PRIOR TO FILLING THE KEYS WITH NON-SHRINK GROUT. THE GROUT SHALL BE RODDED OR VIBRATED TO ENSURE THAT ALL THE VOIDS IN THE SHEAR KEYS ARE FILLED. THE CONTRACTOR SHALL COVER AND PROTECT THE KEYWAYS FROM THE WEATHER AND DEBRIS UNTIL THEY ARE FILLED.
3. AFTER THE GROUT HAS ATTAINED A STRENGTH OF 1500 PSI (BASED ON THE MANUFACTURERS DIRECTIONS), TENSION EACH TRANSVERSE TIE TO 30 KIPS. NO TRAFFIC OR HEAVY EQUIPMENT WILL BE PERMITTED ON THE BEAMS UNTIL ALL TIES HAVE BEEN FULLY TENSIONED.
4. BRIDGE DECK CONCRETE SHALL NOT BE PLACED UNTIL THE TRANSVERSE TIES HAVE BEEN FULLY TENSIONED.
5. THE COST OF NON-SHRINK GROUT AND THE CLOSED CELL POLYETHYLENE FOAM BACKER ROD SHALL BE INCLUDED FOR PAYMENT UNDER THE ITEM "PRESTRESSED DECK UNITS (3'-0" X 2'-0")".

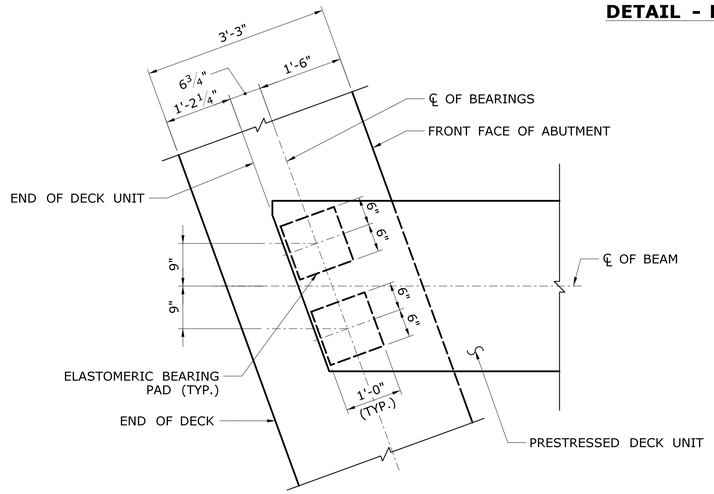

TYPICAL BEARING LAYOUT

NOT TO SCALE

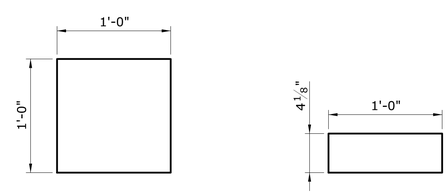

PLAN VIEW **ELEVATION VIEW**

ELASTOMERIC BEARING PAD

SCALE: 1½" = 1'-0"

ELASTOMERIC BEARING NOTES

1. THE ELASTOMERIC BEARINGS ARE DESIGNED USING "METHOD A" OF THE AASHTO LRFD BRIDGE DESIGN SPECIFICATIONS.
2. THE CONTRACTOR SHALL SURVEY THE AS BUILT SEAT MEASUREMENTS AND SUBMIT TO THE ENGINEER FOR REVIEW PRIOR TO BEAM ERECTION.
3. THE ELASTOMER SHALL CONTAIN ONLY VIRGIN POLYCHLOROPRENE (NEOPRENE) AS THE RAW POLYMER AND HAVE A SPECIFIED SHEAR MODULUS BETWEEN 0.130 KSI AND 0.200 KSI. THE DUROMETER HARDNESS SHALL BE 60.
4. THE ELASTOMERIC BEARINGS SHALL BE INSTALLED WHEN THE AMBIENT AIR AND BEARING TEMPERATURES ARE BETWEEN 40° F AND 85° F AND HAVE BEEN WITHIN THIS RANGE FOR AT LEAST TWO HOURS.
5. THE MAXIMUM UNFACTORED DESIGN LOAD (DL + LL WITHOUT IMPACT) FOR EACH BEARING PAD IS 28.7 KIPS.
6. THE COST OF FURNISHING AND INSTALLING THE ELASTOMERIC BEARINGS SHALL BE PAID FOR UNDER THE ITEM "ELASTOMERIC BEARING PADS."

REV.	DATE	REVISION DESCRIPTION	SHEET NO.

THE INFORMATION, INCLUDING ESTIMATED QUANTITIES OF WORK, SHOWN ON THESE SHEETS IS BASED ON LIMITED INVESTIGATIONS BY THE STATE AND IS IN NO WAY WARRANTED TO INDICATE THE CONDITIONS OF ACTUAL QUANTITIES OF WORK WHICH WILL BE REQUIRED.

Plotted Date: 8/16/2019

DESIGNER/DRAFTER: SPM
CHECKED BY: RIB
SCALE AS NOTED

STATE OF CONNECTICUT
DEPARTMENT OF TRANSPORTATION

Filename: ...\23_Deck_Unit_Details_3.dgn

SIGNATURE/BLOCK: OFFICE OF ENGINEERING
APPROVED BY: Mary E. Back

PROJECT TITLE: REPLACEMENT OF BR. NO. 00681 - HUNTINGTON RD. (RTE 14) OVER MERRICK BROOK

TOWN: SCOTLAND

DRAWING TITLE: DECK UNIT DETAILS - 3

PROJECT NO. 123-066
DRAWING NO. S-23
SHEET NO. 03.23

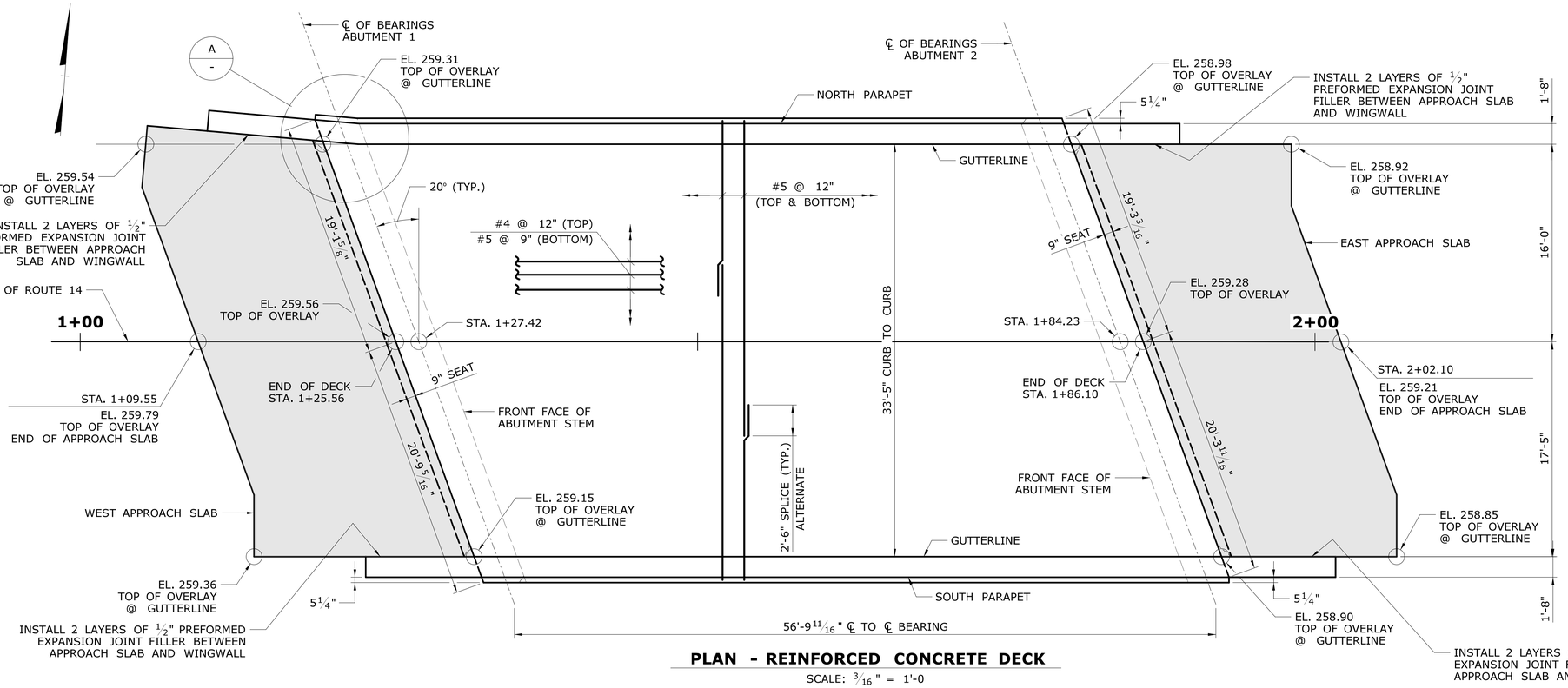

PLAN - REINFORCED CONCRETE DECK

SCALE: 3/16" = 1'-0

REINFORCEMENT NOTES:

1. ALL REINFORCING STEEL IN THE DECK AND PARAPETS SHALL BE ASTM A615, GRADE 60 AND SHALL BE GALVANIZED IN ACCORDANCE WITH ASTM A767.
2. AT AREAS WHERE EXACT REBAR SPACING SHOWN ON THE PLANS CANNOT BE ACHIEVED, REBARS SHALL BE PLACED EVENLY AND SHALL NOT EXCEED MAXIMUM REBAR SPACING SHOWN ON THE PLANS, UNLESS OTHERWISE INDICATED.
3. THE COST OF REINFORCEMENT SHALL BE PAID FOR UNDER THE ITEM "DEFORMED STEEL BARS - GALVANIZED."
4. THE SPLICE LENGTH FOR THE REINFORCEMENT IN THE DECK AND PARAPETS SHALL BE AS FOLLOWS UNLESS DIMENSIONED OTHERWISE:

BAR SIZE	SPLICE LENGTH
#4	2'-0"
#5	2'-6"
#6	2'-10"

THE SPLICES SHALL BE ALTERNATED SO THAT 50% OR LESS OF THE BARS ARE SPLICED AT THE SAME LOCATION.

DECK PLAN NOTES:

1. THE DECK CONCRETE SHALL BE PLACED IN ONE CONTINUOUS POUR AS SHOWN ON DRAWING NO. S-19. THE CONCRETE MIX SHALL BE CLASS PCC04462 AND SHALL BE PAID FOR UNDER THE ITEM "BRIDGE DECK CONCRETE."
2. NO TEMPORARY INTERMEDIATE SUPPORTS SHALL BE USED DURING THE PLACING AND SETTING OF THE CONCRETE DECK SLAB. CONSTRUCTION LOADS AND DEAD LOADS WILL BE PERMITTED WHEN DIRECTED BY THE ENGINEER BUT ONLY WHEN THE CONCRETE HAS ATTAINED A MINIMUM STRENGTH OF f'c = 3,000 PSI. TRAFFIC LIVE LOADS WILL BE PERMITTED ON THE STRUCTURE AFTER THE CONCRETE HAS REACHED A MINIMUM STRENGTH OF f'c = 4000 PSI.

FINISHED DECK ELEVATIONS

BEAM NO.	SPAN (L = 56'-9 11/16")										
	℄ BEARING ABUTMENT 1	0.1L	0.2L	0.3L	0.4L	0.5L	0.6L	0.7L	0.8L	0.9L	℄ BEARING ABUTMENT 2
B1	259.04	258.98	258.93	258.89	258.86	258.84	258.82	258.80	258.78	258.76	258.74
B2	259.09	259.03	258.98	258.94	258.92	258.90	258.88	258.86	258.84	258.81	258.79
B3	259.13	259.08	259.03	259.00	258.98	258.95	258.93	258.91	258.89	258.87	258.85
B4	259.18	259.13	259.08	259.05	259.03	259.01	258.99	258.97	258.95	258.93	258.91
B5	259.23	259.18	259.14	259.11	259.09	259.07	259.05	259.02	259.00	258.98	258.96
B6	259.28	259.23	259.19	259.16	259.14	259.12	259.10	259.08	259.06	259.04	259.02
B7	259.24	259.19	259.16	259.13	259.11	259.09	259.07	259.05	259.03	259.01	258.99
B8	259.17	259.12	259.09	259.07	259.05	259.03	259.01	258.98	258.96	258.94	258.92
B9	259.10	259.06	259.03	259.00	258.98	258.96	258.94	258.92	258.90	258.88	258.86
B10	259.03	258.99	258.96	258.94	258.92	258.90	258.88	258.86	258.84	258.81	258.79
B11	258.96	258.92	258.90	258.88	258.85	258.83	258.81	258.79	258.77	258.75	258.73
B12	258.89	258.86	258.83	258.81	258.79	258.77	258.75	258.73	258.71	258.69	258.67

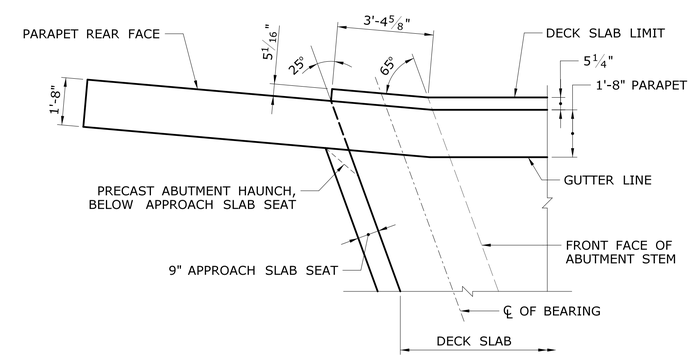

DECK DETAIL

SCALE: 3/8" = 1'-0

A
-

REV.	DATE	REVISION DESCRIPTION	SHEET NO.

THE INFORMATION, INCLUDING ESTIMATED QUANTITIES OF WORK, SHOWN ON THESE SHEETS IS BASED ON LIMITED INVESTIGATIONS BY THE STATE AND IS IN NO WAY WARRANTED TO INDICATE THE CONDITIONS OF ACTUAL QUANTITIES OF WORK WHICH WILL BE REQUIRED.

Plotted Date: 7/23/2019

DESIGNER/DRAFTER: SPM
CHECKED BY: RIB
SCALE AS NOTED

STATE OF CONNECTICUT
DEPARTMENT OF TRANSPORTATION

Filename: ...\24_Deck_Plan.dgn

SIGNATURE/BLOCK: OFFICE OF ENGINEERING
APPROVED BY: Mary E. Cook

PROJECT TITLE: REPLACEMENT OF BR. NO. 00681 - HUNTINGTON RD. (RTE 14) OVER MERRICK BROOK

TOWN: SCOTLAND

DRAWING TITLE: DECK PLAN

PROJECT NO. 123-066
DRAWING NO. S-24
SHEET NO. 03.24

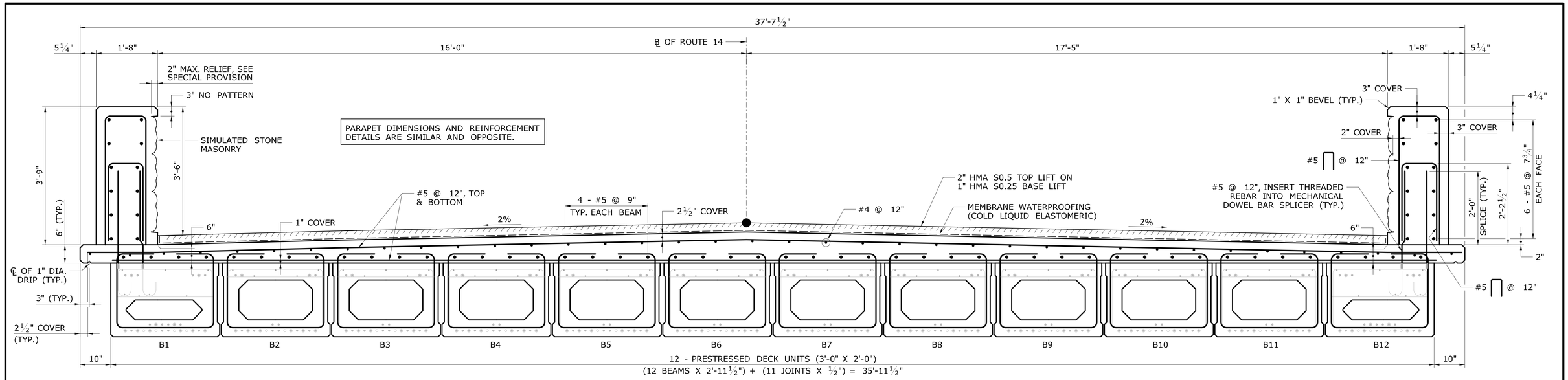

TYPICAL DECK SECTION

SCALE: ¾" = 1'-0

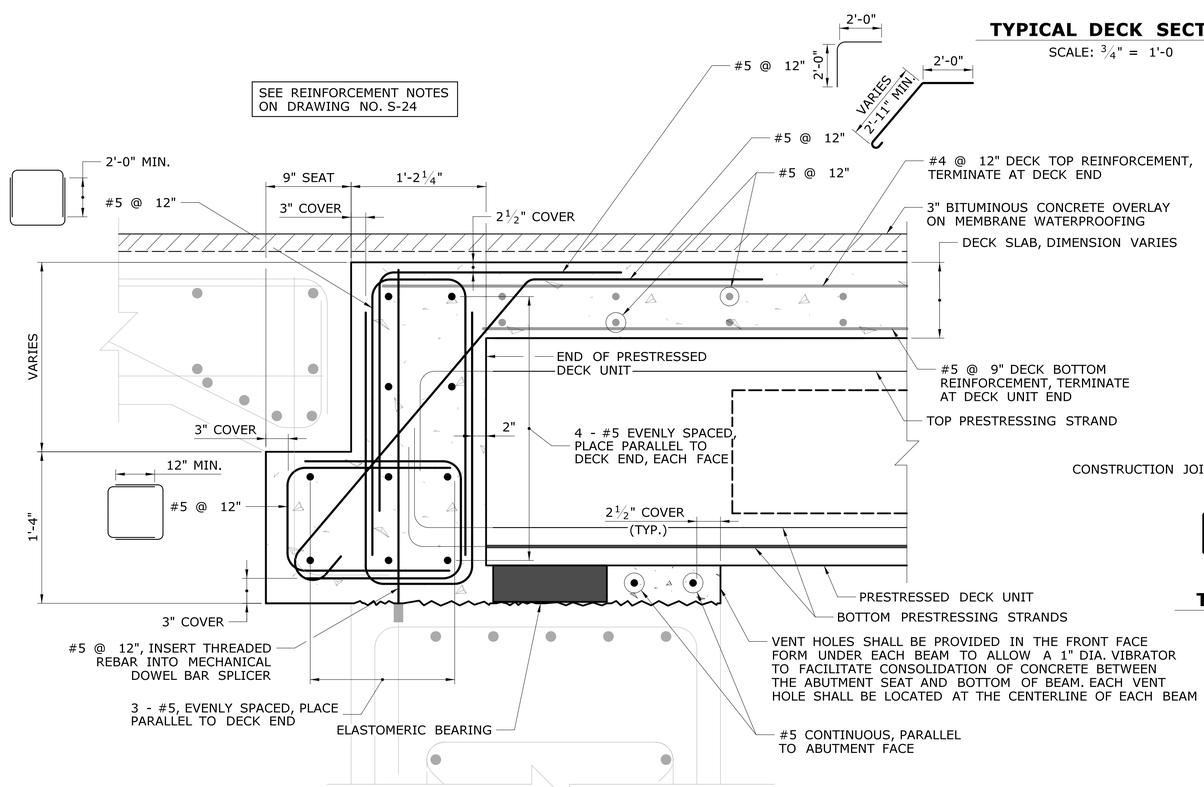

DETAIL - TYPICAL END OF DECK AT ABUTMENT

SCALE: 1½" = 1'-0"

D
S-14

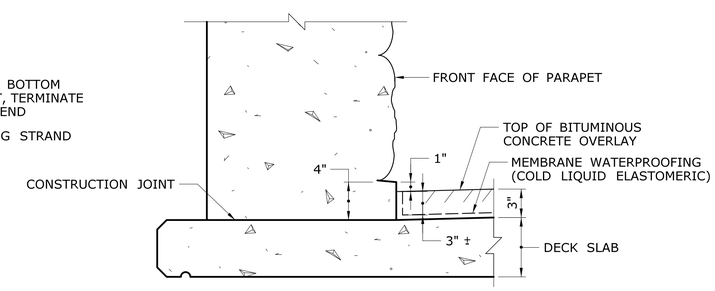

TYPICAL TREATMENT OF MEMBRANE WATERPROOFING AT GUTTER

SCALE: N.T.S.

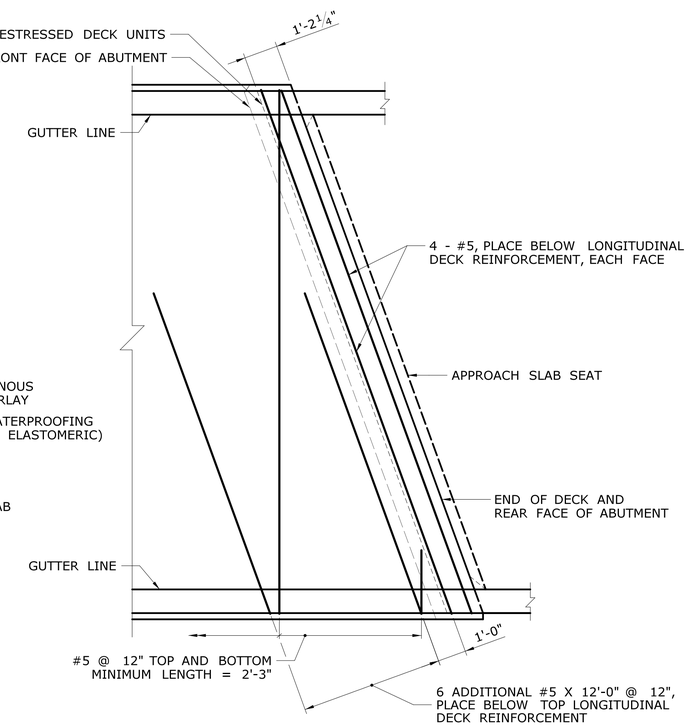

TYPICAL ACUTE CORNER REINFORCEMENT

SCALE: ⅜" = 1'-0

REV.	DATE	REVISION DESCRIPTION	SHEET NO.

THE INFORMATION, INCLUDING ESTIMATED QUANTITIES OF WORK, SHOWN ON THESE SHEETS IS BASED ON LIMITED INVESTIGATIONS BY THE STATE AND IS IN NO WAY WARRANTED TO INDICATE THE CONDITIONS OF ACTUAL QUANTITIES OF WORK WHICH WILL BE REQUIRED.

Plotted Date: 7/23/2019

DESIGNER/DRAFTER: SPM
CHECKED BY: RIB
SCALE AS NOTED

STATE OF CONNECTICUT
DEPARTMENT OF TRANSPORTATION

Filename: ...\25_Deck Cross Section and Details.dgn

SIGNATURE/BLOCK:
OFFICE OF ENGINEERING
APPROVED BY:

PROJECT TITLE:
REPLACEMENT OF BR. NO. 00681 - HUNTINGTON RD. (RTE.14) OVER MERRICK BROOK

TOWN: SCOTLAND

DRAWING TITLE:
DECK CROSS SECTION AND DECK DETAILS

PROJECT NO. 123-066
DRAWING NO. S-25
SHEET NO. 03.25

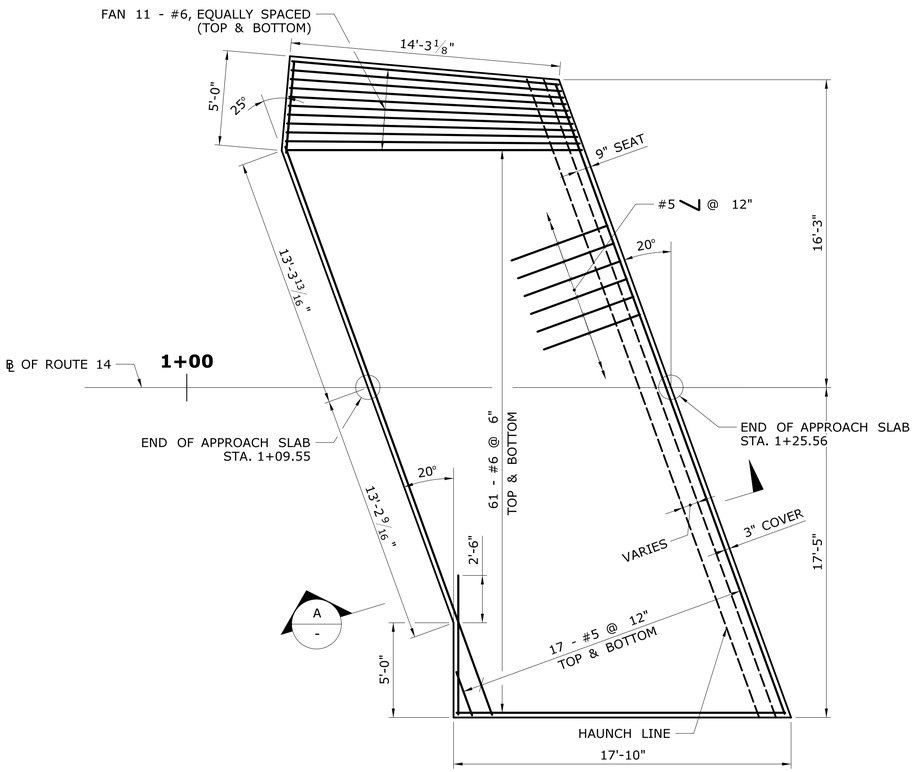

WEST APPROACH SLAB

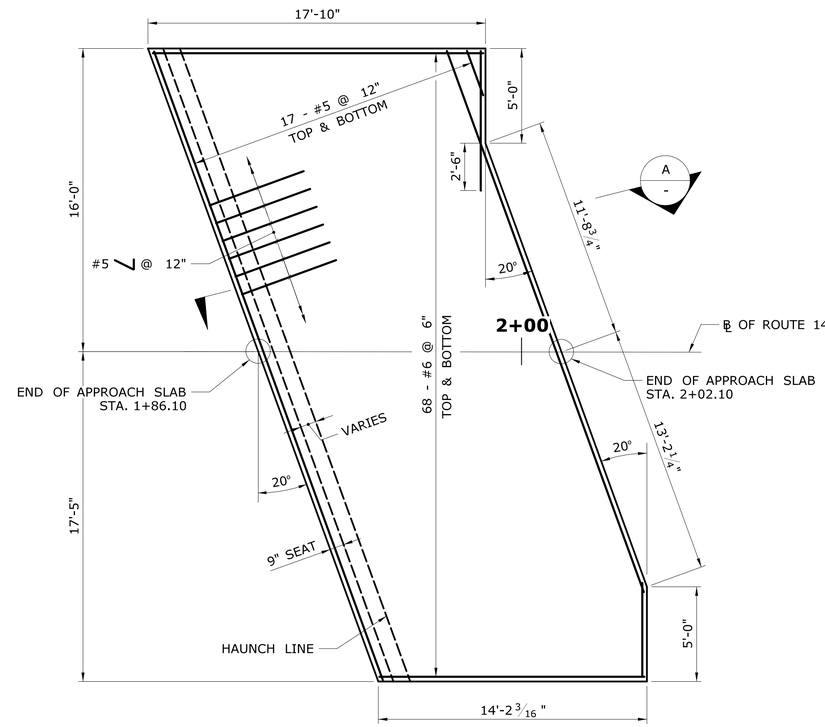

EAST APPROACH SLAB

PLAN - APPROACH SLAB

SCALE: 1/4" = 1'-0"

REINFORCEMENT NOTES:

1. ALL REINFORCING STEEL IN APPROACH SLAB SHALL BE ASTM A615, GRADE 60 AND SHALL BE GALVANIZED IN ACCORDANCE WITH ASTM A767.
2. AT AREAS WHERE EXACT REBAR SPACING SHOWN ON THE PLANS CANNOT BE ACHIEVED, REBARS SHALL BE PLACED EVENLY AND SHALL NOT EXCEED MAXIMUM REBAR SPACING SHOWN ON THE PLANS, UNLESS OTHERWISE INDICATED.
3. THE COST OF REINFORCEMENT SHALL BE PAID FOR UNDER THE ITEM "DEFORMED STEEL BARS - GALVANIZED."
4. THE SPLICE LENGTH FOR THE REINFORCEMENT IN THE APPROACH SLAB SHALL BE AS FOLLOWS UNLESS DIMENSIONED OTHERWISE:

BAR SIZE	SPLICE LENGTH
#4	2'-0"
#5	2'-6"
#6	2'-10"

THE SPLICES SHALL BE ALTERNATED SO THAT 50% OR LESS OF THE BARS ARE SPLICED AT THE SAME LOCATION.

APPROACH SLAB NOTES:

1. THE CONCRETE MIX FOR THE APPROACH SLAB SHALL BE CLASS PCC04460 AND SHALL BE PAID FOR UNDER THE ITEM "APPROACH SLAB CONCRETE."
2. CONSTRUCTION LOADS AND DEAD LOADS ON APPROACH SLAB WILL BE PERMITTED WHEN DIRECTED BY THE ENGINEER BUT ONLY WHEN THE CONCRETE HAS ATTAINED A MINIMUM STRENGTH OF f'c = 3,000 PSI. TRAFFIC LIVE LOADS WILL BE PERMITTED ON THE STRUCTURE AFTER THE CONCRETE HAS REACHED A MINIMUM STRENGTH OF f'c = 4000 PSI.

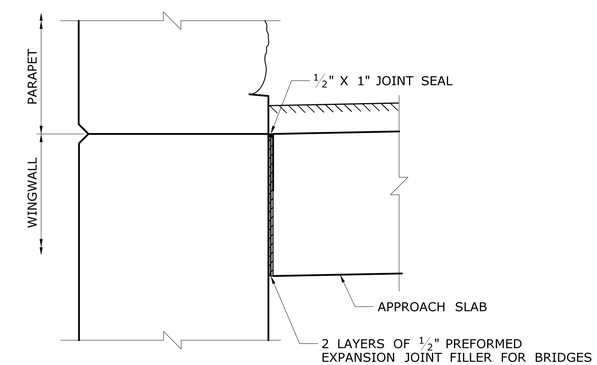

ELEVATION - APPROACH SLAB JOINT DETAIL AT WINGWALL

SCALE: 1 1/2" = 1'-0"

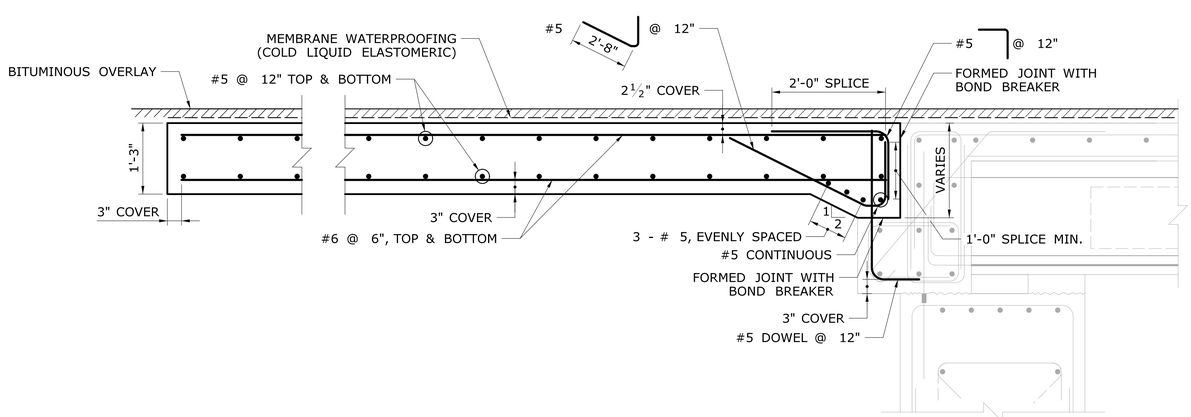

SECTION - APPROACH SLAB A / -

SCALE: 3/4" = 1'-0"

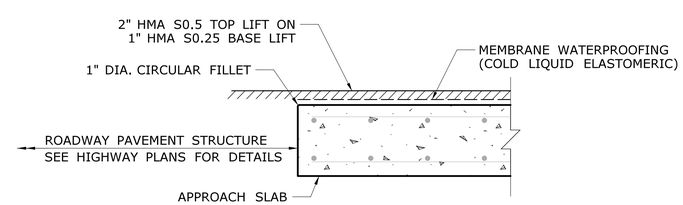

PAVEMENT TRANSITION AT END OF APPROACH SLAB

SCALE: 3/4" = 1'-0"

REV.	DATE	REVISION DESCRIPTION	SHEET NO.

THE INFORMATION, INCLUDING ESTIMATED QUANTITIES OF WORK, SHOWN ON THESE SHEETS IS BASED ON LIMITED INVESTIGATIONS BY THE STATE AND IS IN NO WAY WARRANTED TO INDICATE THE CONDITIONS OF ACTUAL QUANTITIES OF WORK WHICH WILL BE REQUIRED.

Plotted Date: 7/23/2019

DESIGNER/DRAFTER: SPM
CHECKED BY: RIB
SCALE AS NOTED

STATE OF CONNECTICUT
DEPARTMENT OF TRANSPORTATION

Filename: ...\26_Approach Slab Details.dgn

SIGNATURE/BLOCK: OFFICE OF ENGINEERING
APPROVED BY:

PROJECT TITLE: REPLACEMENT OF BR. NO. 00681 - HUNTINGTON RD. (RTE 14) OVER MERRICK BROOK

TOWN: SCOTLAND

DRAWING TITLE: APPROACH SLAB DETAILS

PROJECT NO. 123-066
DRAWING NO. S-26
SHEET NO. 03.26

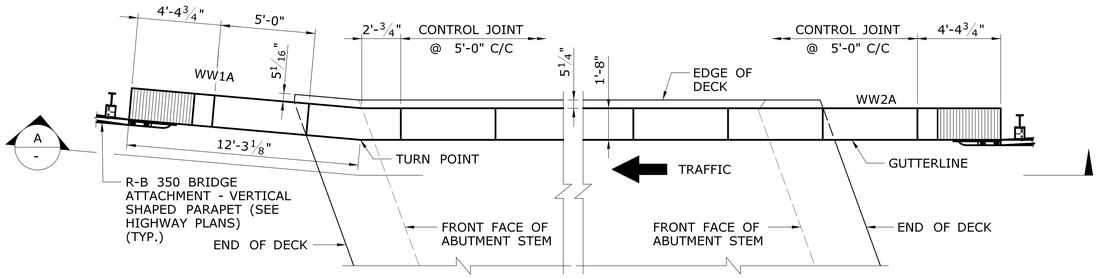

PLAN - REINFORCED CONCRETE PARAPET DETAILS (NORTH)

SCALE: ¼"=1'-0

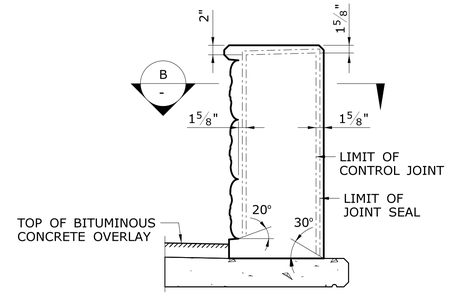

SECTION - CONTROL JOINT DETAIL

SCALE: ¾"=1'-0

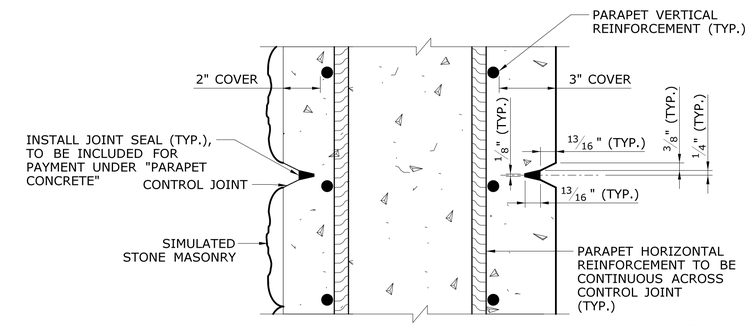

PLAN SECTION - CONTROL JOINT DETAIL

B
-

SCALE: N.T.S.

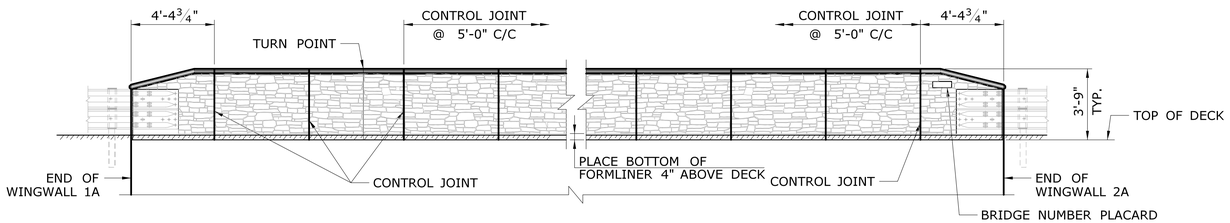

ELEVATION - REINFORCED CONCRETE PARAPET DETAILS (NORTH)

A
-

SCALE: ¼" = 1'-0

NOTES:

1. 1" DIA. PIPE SHALL CONFORM TO ASTM A53 GRADE B OR ASTM A501 AND SHALL BE GALVANIZED IN ACCORDANCE WITH THE REQUIREMENTS OF ASTM A123.
2. ANCHOR PLATES SHALL CONFORM TO THE REQUIREMENTS OF ASTM A36. THE STEEL PLATES SHALL BE HOT-DIP GALVANIZED IN ACCORDANCE WITH THE REQUIREMENTS OF ASTM A123.
3. ANCHOR BOLTS SHALL BE HEX-HEADED AND CONFORM TO THE REQUIREMENTS OF ASTM F1554, GRADE 105. THE NUTS SHALL CONFORM TO THE REQUIREMENTS OF ASTM A563, GRADE DH. THE HARDENED WASHERS SHALL CONFORM TO THE REQUIREMENTS OF ASTM F436. HARDENED WASHERS SHALL BE PLACED UNDER THE TURNED ELEMENTS. THE BOLTS, NUTS AND WASHERS SHALL BE HOT-DIP GALVANIZED AFTER FABRICATION IN ACCORDANCE WITH ASTM F2329.
4. ALL RAIL ANCHORAGE MATERIAL SHALL BE PAID FOR UNDER THE ITEM "R-B 350 BRIDGE ATTACHMENT - VERTICAL SHAPED PARAPET."

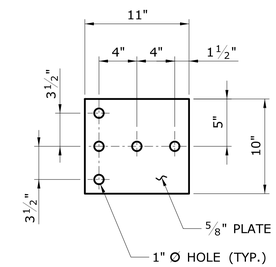

ANCHOR PLATE DETAIL

SCALE: 1½" = 1'-0"

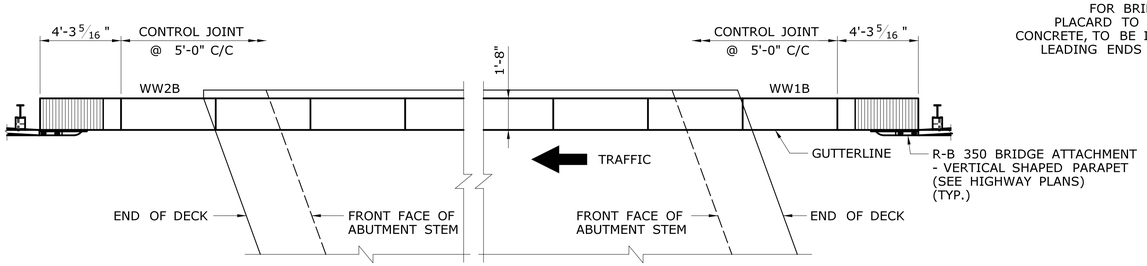

PLAN - REINFORCED CONCRETE PARAPET DETAILS (SOUTH)

SCALE: ¼"=1'-0

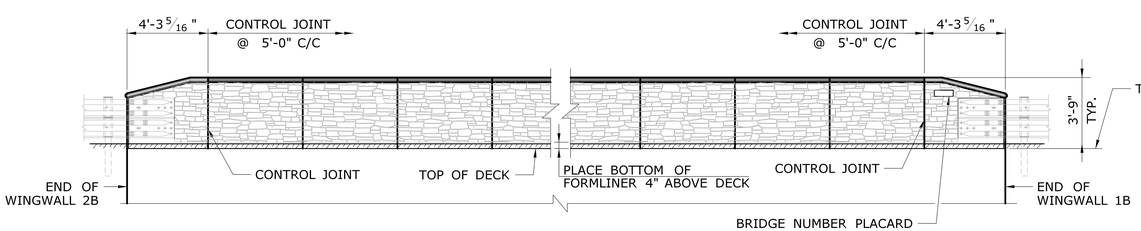

ELEVATION - REINFORCED CONCRETE PARAPET DETAILS (SOUTH)

SCALE: ¼" = 1'-0

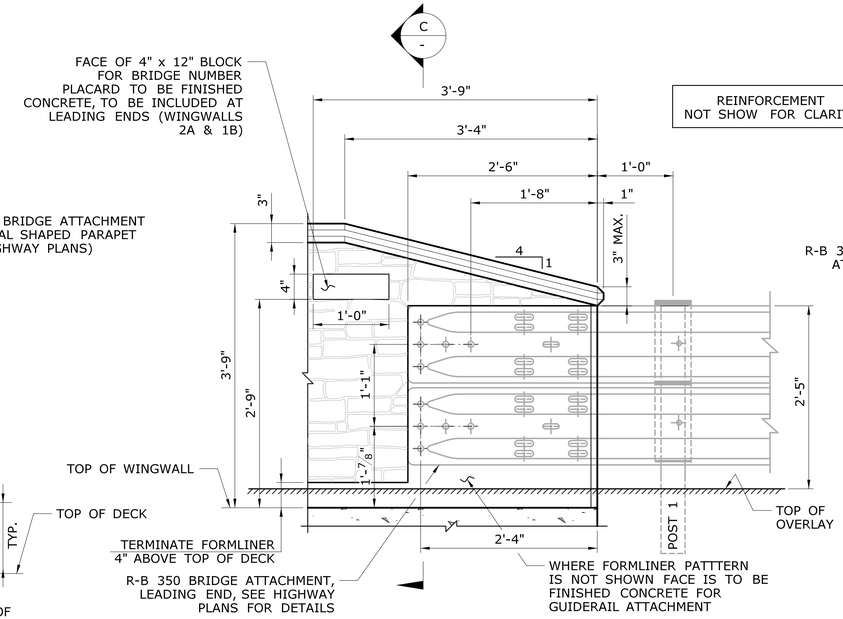

REINFORCEMENT NOT SHOW FOR CLARITY

ELEVATION - END OF PARAPET DETAILS

SCALE: 1" = 1'-0"

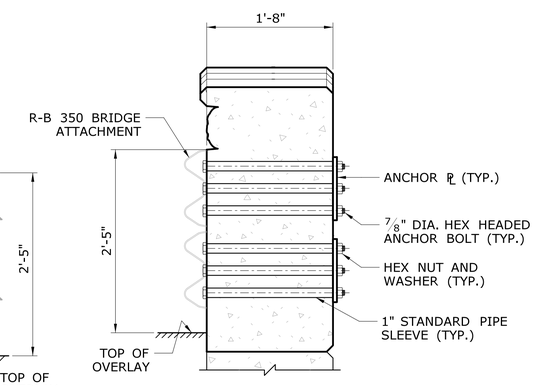

SECTION - BLOCKOUT

C
-

SCALE: 1" = 1'-0"

REV.	DATE	REVISION DESCRIPTION	SHEET NO.

THE INFORMATION, INCLUDING ESTIMATED QUANTITIES OF WORK, SHOWN ON THESE SHEETS IS BASED ON LIMITED INVESTIGATIONS BY THE STATE AND IS IN NO WAY WARRANTED TO INDICATE THE CONDITIONS OF ACTUAL QUANTITIES OF WORK WHICH WILL BE REQUIRED.

Plotted Date: 8/16/2019

DESIGNER/DRAFTER: MC

CHECKED BY: RIB

SCALE AS NOTED

STATE OF CONNECTICUT
DEPARTMENT OF TRANSPORTATION

Filename: ...\27_Parapet Details.dgn

SIGNATURE/BLOCK: OFFICE OF ENGINEERING

APPROVED BY: Mary E. Beck

PROJECT TITLE: REPLACEMENT OF BR. NO. 00681 - HUNTINGTON RD. (RTE 14) OVER MERRICK BROOK

TOWN: SCOTLAND

DRAWING TITLE: PARAPET DETAILS

PROJECT NO. 123-066

DRAWING NO. S-27

SHEET NO. 03.27

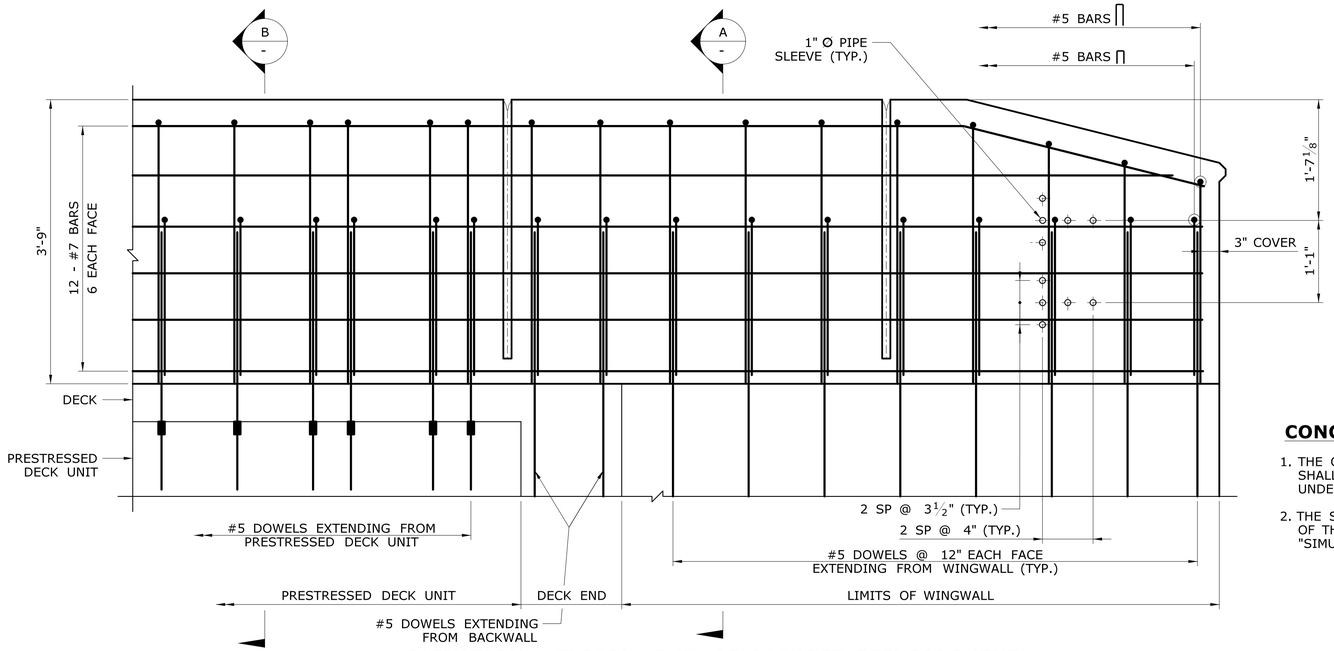

ELEVATION - TYPICAL END OF PARAPET REINFORCMENT

SCALE: 1" = 1'-0"

REINFORCEMENT NOTES:

1. ALL REINFORCING STEEL IN THE PARAPETS SHALL BE ASTM A615, GRADE 60 AND SHALL BE GALVANIZED IN ACCORDANCE WITH ASTM A767.
2. AT AREAS WHERE EXACT REBAR SPACING SHOWN ON THE PLANS CANNOT BE ACHIEVED, REBARS SHALL BE PLACED EVENLY AND SHALL NOT EXCEED MAXIMUM REBAR SPACING SHOWN ON THE PLANS, UNLESS OTHERWISE INDICATED.
3. THE COST OF REINFORCEMENT SHALL BE PAID FOR UNDER THE ITEM "DEFORMED STEEL BARS - GALVANIZED."
4. THE SPLICE LENGTH FOR THE REINFORCEMENT IN THE PARAPETS SHALL BE AS FOLLOWS UNLESS DIMENSIONED OTHERWISE:

BAR SIZE	SPLICE LENGTH
#4	2'-0"
#5	2'-6"
#6	2'-10"

THE SPLICES SHALL BE ALTERNATED SO THAT 50% OR LESS OF THE BARS ARE SPLICED AT THE SAME LOCATION.

CONCRETE NOTES:

1. THE CONCRETE MIX FOR THE CAST-IN-PLACE PARAPETS SHALL BE CLASS PCC04462 AND SHALL BE PAID FOR UNDER THE ITEM "PARAPET CONCRETE."
2. THE SIMULATED STONE MASONRY ON THE FRONT FACE OF THE PARAPETS SHALL BE PAID FOR UNDER THE ITEM "SIMULATED STONE MASONRY."

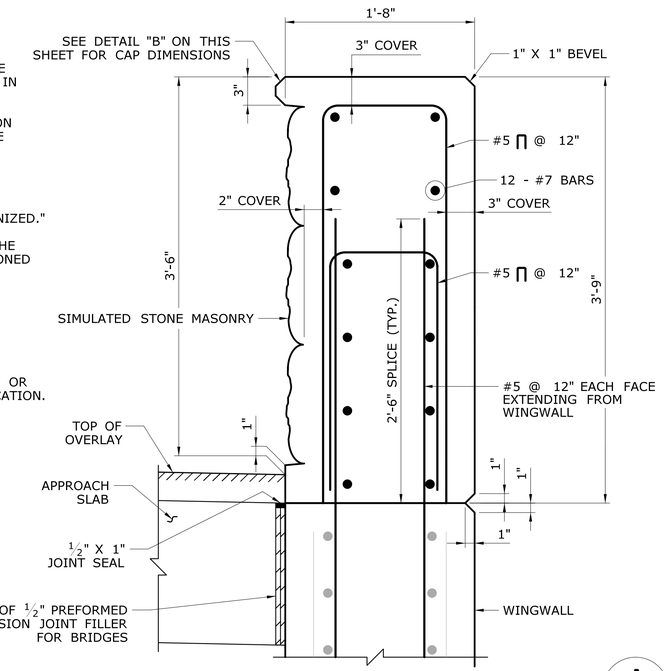

SECTION - PARAPET DETAILS AT WINGWALLS

A
-

SCALE: 1 1/2" = 1'-0

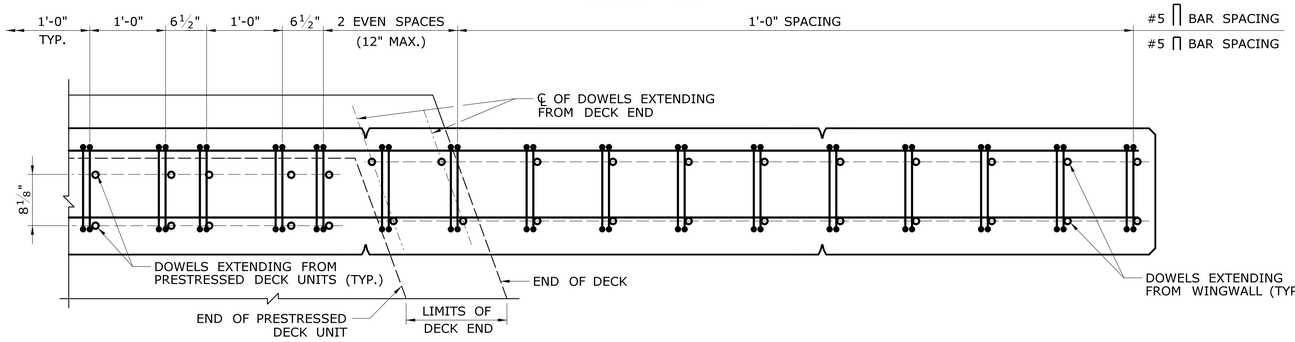

PLAN - END OF PARAPET REINFORCMENT AT WINGWALLS 2A, 1B, 2B

SCALE: 1" = 1'-0"

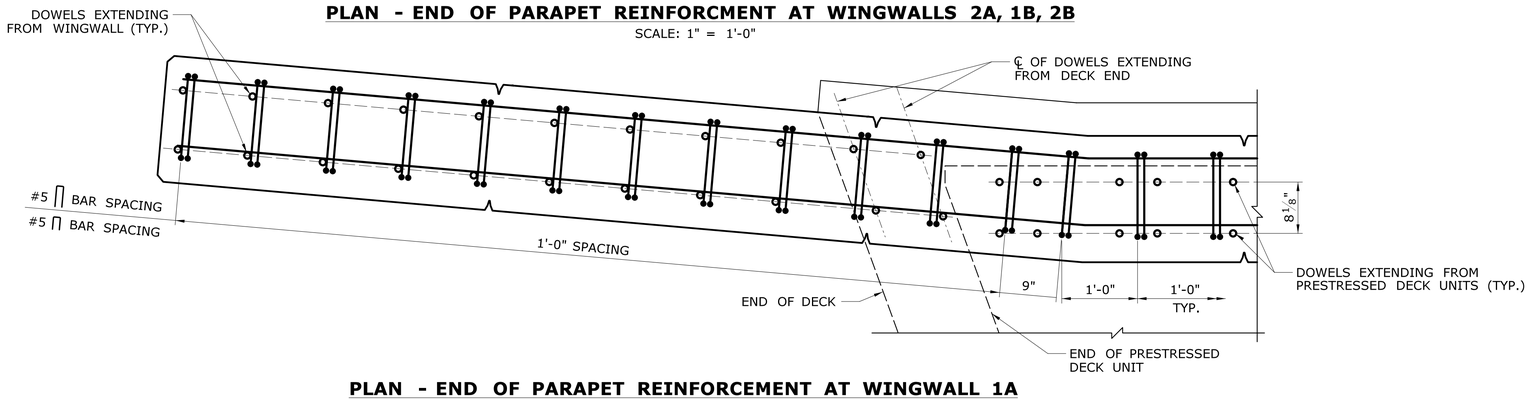

PLAN - END OF PARAPET REINFORCEMENT AT WINGWALL 1A

SCALE: 1" = 1'-0"

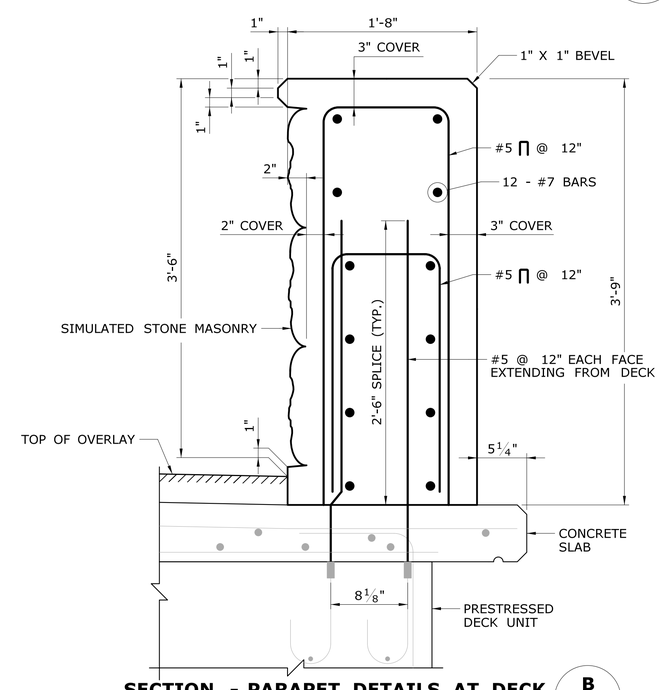

SECTION - PARAPET DETAILS AT DECK

B
-

SCALE: 1 1/2" = 1'-0

REV.	DATE	REVISION DESCRIPTION	SHEET NO.

THE INFORMATION, INCLUDING ESTIMATED QUANTITIES OF WORK, SHOWN ON THESE SHEETS IS BASED ON LIMITED INVESTIGATIONS BY THE STATE AND IS IN NO WAY WARRANTED TO INDICATE THE CONDITIONS OF ACTUAL QUANTITIES OF WORK WHICH WILL BE REQUIRED.

Plotted Date: 7/23/2019

DESIGNER/DRAFTER: MC
CHECKED BY: RIB
SCALE AS NOTED

STATE OF CONNECTICUT
DEPARTMENT OF TRANSPORTATION

Filename: ...\28_Parapet Reinforcement Details.dgn

SIGNATURE/BLOCK:
OFFICE OF ENGINEERING
APPROVED BY:

PROJECT TITLE:
REPLACEMENT OF BR. NO. 00681 - HUNTINGTON RD. (RTE.14) OVER MERRICK BROOK

TOWN: SCOTLAND

DRAWING TITLE: PARAPET REINFORCEMENT DETAILS

PROJECT NO. 123-066
DRAWING NO. S-28
SHEET NO. 03.28

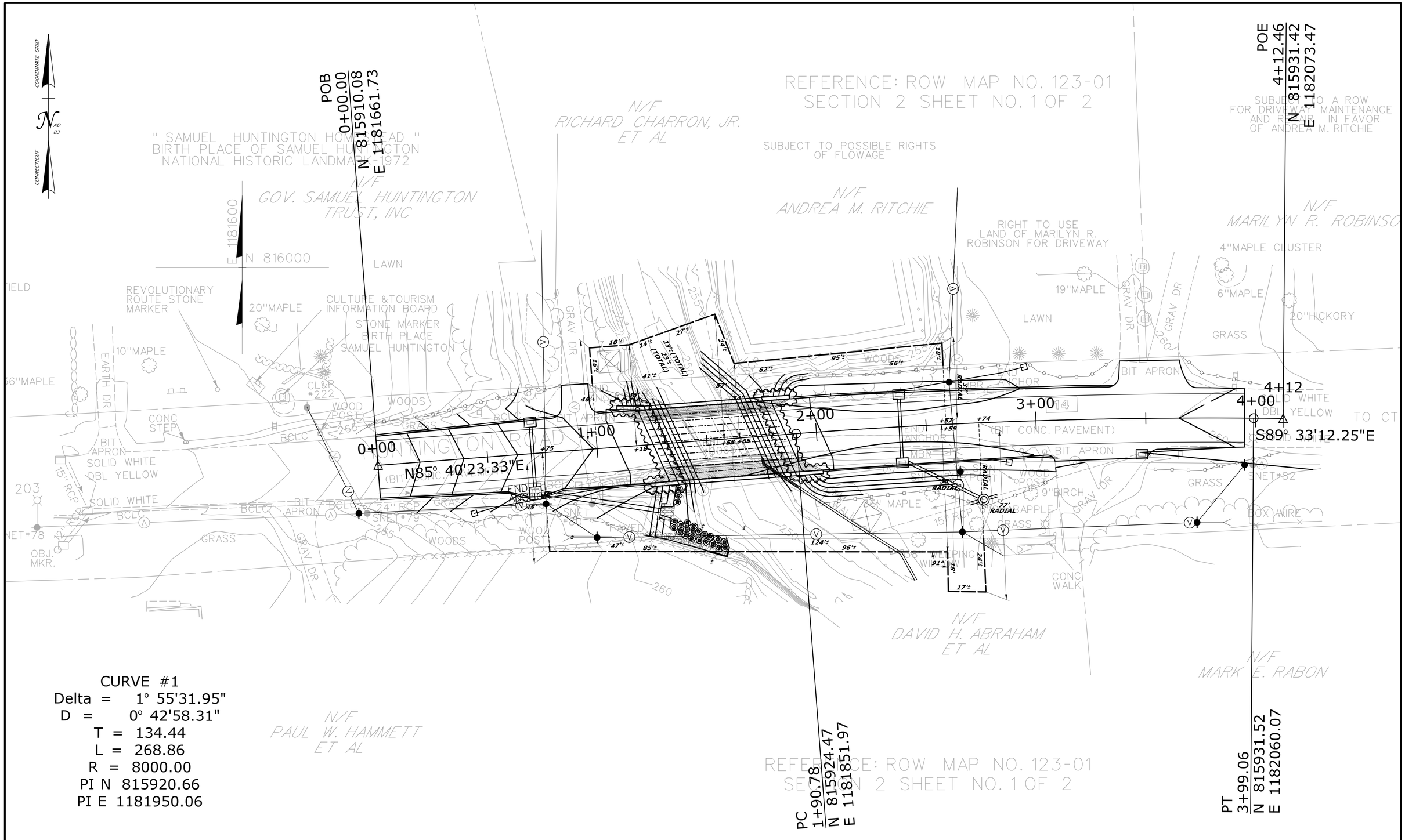

CURVE #1
Delta = 1° 55'31.95"
D = 0° 42'58.31"
T = 134.44
L = 268.86
R = 8000.00
PI N 815920.66
PI E 1181950.06

REV.	DATE	REVISION DESCRIPTION	SHEET NO.

THE INFORMATION, INCLUDING ESTIMATED QUANTITIES OF WORK, SHOWN ON THESE SHEETS IS BASED ON LIMITED INVESTIGATIONS BY THE STATE AND IS IN NO WAY WARRANTED TO INDICATE THE CONDITIONS OF ACTUAL QUANTITIES OF WORK WHICH WILL BE REQUIRED.

Plotted Date: 7/23/2019

DESIGNER/DRAFTER: SPM
CHECKED BY: RIB
SCALE AS NOTED

STATE OF CONNECTICUT
DEPARTMENT OF TRANSPORTATION

Filename: ...\ROW IMPACT PLAN.dgn

SIGNATURE/BLOCK: OFFICE OF ENGINEERING
APPROVED BY: Mary E. Beck

PROJECT TITLE: REPLACEMENT OF BR. NO. 00681 - HUNTINGTON RD. (RTE 14) OVER MERRICK BROOK

TOWN: SCOTLAND

DRAWING TITLE: ROW IMPACT PLAN

PROJECT NO. 123-066
DRAWING NO. ROW-1
SHEET NO. 03.29