04 - STRUCTURES
INDEX OF DRAWINGS

DRAWING NUMBER	DRAWING TITLE	DRAWING NUMBER	DRAWING TITLE
S-01	INDEX OF DRAWINGS		
S-02	GRADING PLAN		
S-03	BORING LOGS		
S-04	GENERAL PLAN		
S-05	PLAN AND SECTION - BRIDGE NO. 07018		
S-06	PLAN AND SECTION - BRIDGE NO. 07019		
S-07	CULVERT 1 - INLET AND OUTLET ELEVATIONS		
S-08	CULVERT 2 - INLET AND OUTLET ELEVATIONS		
S-09	TYPICAL WINGWALL SECTION AND COFFERDAM DETAILS		
S-10	CULVERT 1 REINFORCING - WINGWALLS AND FOOTINGS		
S-11	CULVERT 2 REINFORCING - WINGWALLS AND FOOTINGS		
S-12	BOX CULVERT REINFORCING DETAILS - 1		
S-13	BOX CULVERT REINFORCING DETAILS - 2		
S-14	CUT-OFF WALL AND RETURN WALL DETAILS		
S-15	TRUCK APRON PLAN AND REINFORCING DETAILS		
S-16	TRUCK APRON JOINT DETAIL		

THE DESIGN APPEARS TO CONFORM TO APPLICABLE CRITERIA. APPROVAL IS NOT TO BE CONSTRUED TO MEAN THAT ALL ASPECTS OF THE DESIGN HAVE BEEN PERSONALLY CHECKED BY THE UNDERSIGNED.

Mary E. Baker, P.E.
2019.08.08
15:59:40-04'00'

TRANSPORTATION PRINCIPAL ENGINEER

DESIGNER/DRAFTER: RDH
CHECKED BY: NJM

Plotted Date: 7/25/2019
Filename: pw:\\ctdot.projectwiseonline.com:CTDOT\Documents\01.0 - Projects - Active\0134-0147\330_Design_Data\Structure_Bridge\SB_134_147_Culv1 Pln and Elev_BDG_SHEET_0134-0147.dgn

REV.	DATE	REVISION DESCRIPTION
-	-	-
-	-	-
-	-	-
-	-	-
-	-	-
-	-	-

SCALE AS NOTED

SIGNATURE/ BLOCK:

OFFICE OF ENGINEERING
2800 BERLIN TURNPIKE
NEWINGTON, CT 06111

APPROVED BY:

STATE OF CONNECTICUT
DEPARTMENT OF TRANSPORTATION

MODERN ROUNDABOUT
AT ROUTE 190 AND ROUTE 319

TOWN OF STAFFORD

PROJECT NO. 0134-0147

DRAWING TITLE: INDEX OF DRAWINGS

DRAWING NO. S-01

SHEET NO. 04.01

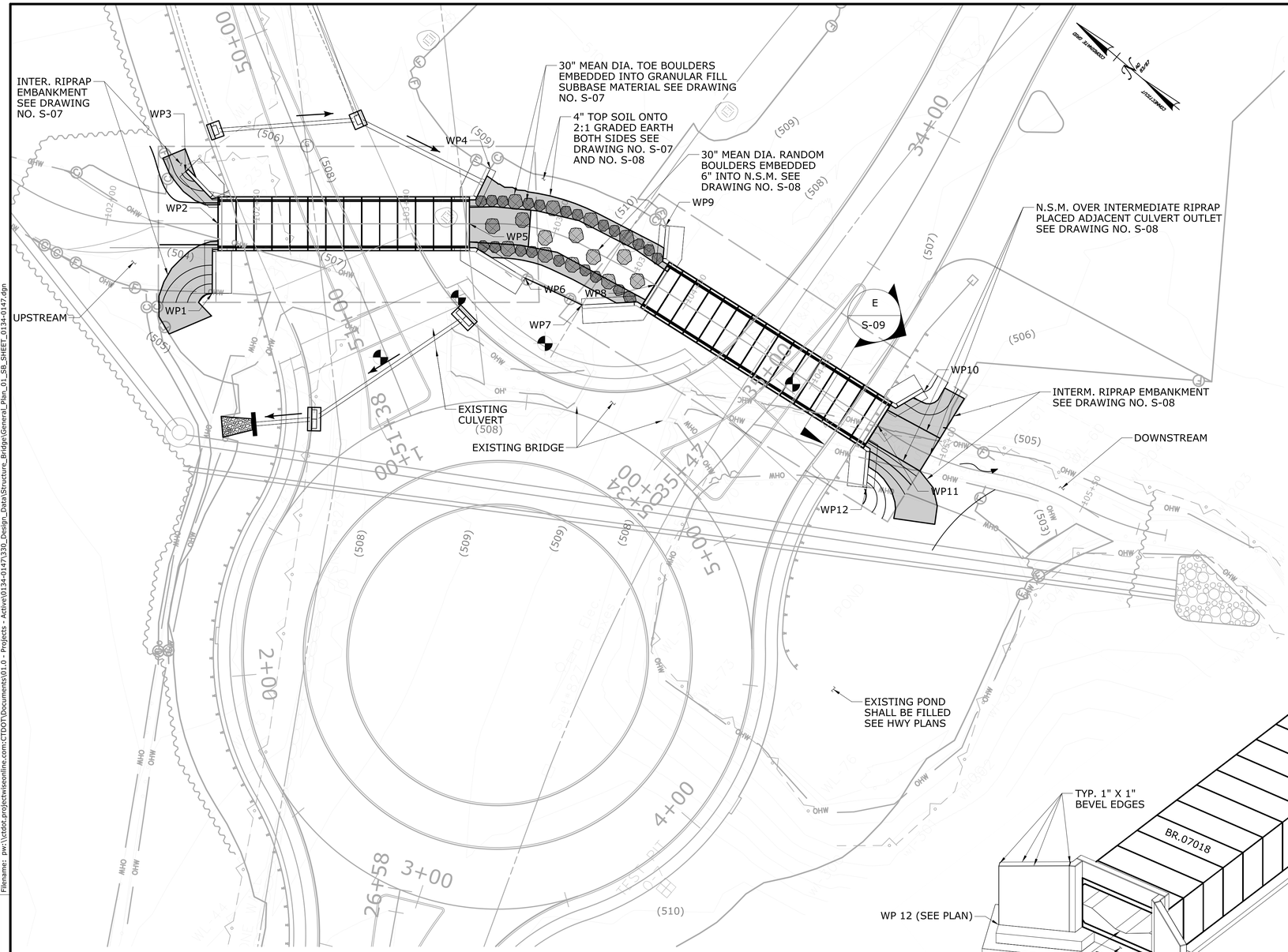

GRADING PLAN

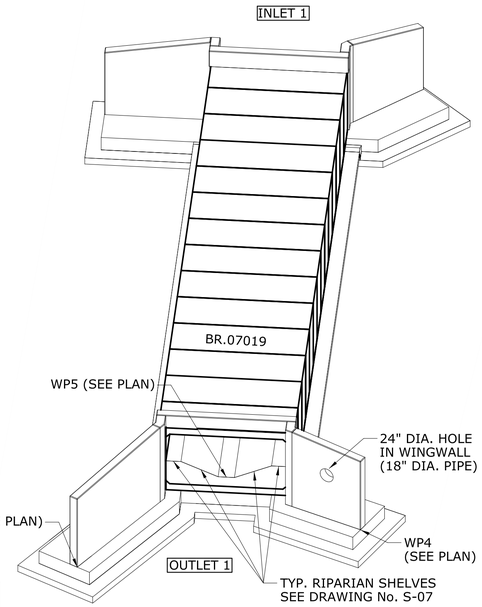

ISOMETRIC VIEW C1

N.T.S.

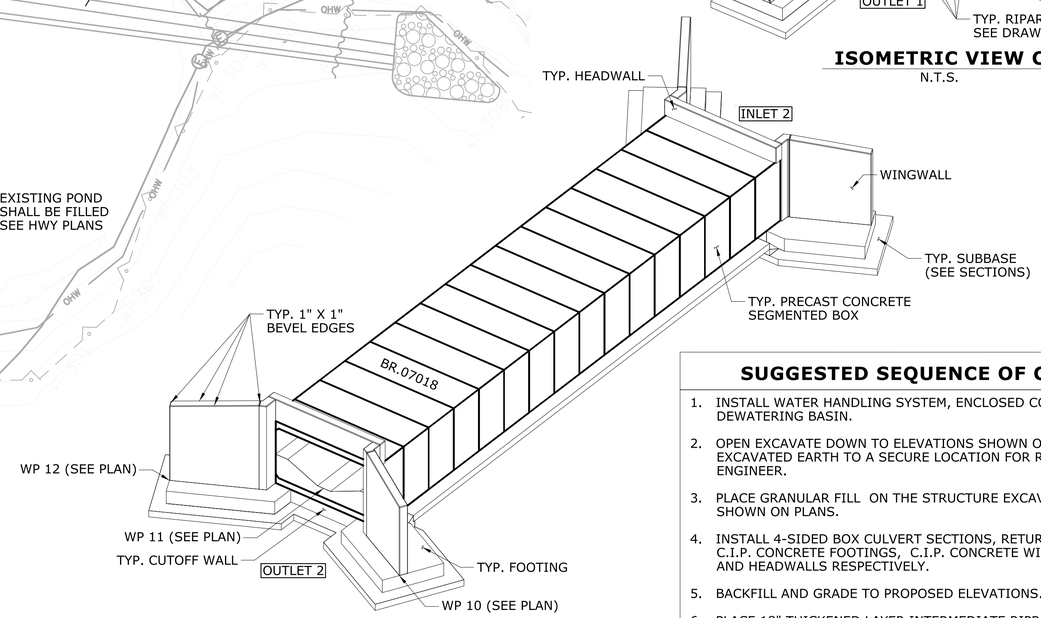

ISOMETRIC VIEW C2

N.T.S.

NOTE:
THE ENCLOSED COFFERDAMS LAYOUT CAN BE VIEWED ON THE "GENERAL PLAN" DRAWING NO. S-04 AND DETAILS ARE ON DRAWING NO. S-09. SEE HWY PLANS FOR CONSTRUCTION STAGINGS AND WATER HANDLING PLANS.

SUGGESTED SEQUENCE OF CONSTRUCTION

1. INSTALL WATER HANDLING SYSTEM, ENCLOSED COFFERDAM AND DEWATERING BASIN.
2. OPEN EXCAVATE DOWN TO ELEVATIONS SHOWN ON SECTIONS AND REMOVE EXCAVATED EARTH TO A SECURE LOCATION FOR REUSE AS SPECIFIED BY THE ENGINEER.
3. PLACE GRANULAR FILL ON THE STRUCTURE EXCAVATED AREAS AND AT ELEVATIONS SHOWN ON PLANS.
4. INSTALL 4-SIDED BOX CULVERT SECTIONS, RETURN AND CUTOFF WALLS, C.I.P. CONCRETE FOOTINGS, C.I.P. CONCRETE WINGWALLS, AND HEADWALLS RESPECTIVELY.
5. BACKFILL AND GRADE TO PROPOSED ELEVATIONS.
6. PLACE 18" THICKENED LAYER INTERMEDIATE RIPRAP, PLACE BOULDERS 6" INTO GRANULAR FILL MATERIAL, AND PLACE 12" NATURAL STREAMBED MATERIAL AND 4" TOP SOIL ON 2:1 GRADED EARTH AS SHOWN ON PLAN S-07.
7. CREATE AND DEFINE LOW FLOW CHANNEL WITHIN NATURAL STREAMBED MATERIAL.
8. REMOVAL OF COFFERDAM SECTIONS, REESTABLISH LOW FLOW CHANNEL AND REESTABLISH STREAM FLOW THROUGH BOTH CULVERTS.

LEGEND

509	CONTOUR LINE
OHW	ORDINARY HIGH WATER
	BOULDER
	EXISTING ROCK
F F	FILL LINE
C C	CUT LINE
N.S.M.	NATURAL STREAMBED MATERIAL
I.RIPRAP	INTERMEDIATE RIPRAP (TYP.)

REV.	DATE	REVISION DESCRIPTION
-	-	-
-	-	-
-	-	-
-	-	-
-	-	-
-	-	-

DESIGNER/DRAFTER: RDH
CHECKED BY: NJM
Plotted Date: 7/25/2019
Filename: pw:\\ctdot.projectwiseonline.com:CTDOT\Documents\01.0 - Projects - Active\0134-0147\330_Design_Data\Structure_Bridge\General_Plan_01_S8_SHEET_0134-0147.dgn

0 20' 40'
HORIZONTAL SCALE 1"=20'

SIGNATURE/ BLOCK:

OFFICE OF ENGINEERING
2800 BERLIN TURNPIKE
NEWINGTON, CT 06111

APPROVED BY:

STATE OF CONNECTICUT
DEPARTMENT OF TRANSPORTATION

MODERN ROUNDABOUT
AT ROUTE 190 AND ROUTE 319

TOWN OF STAFFORD

PROJECT NO. 0134-0147
DRAWING TITLE: GRADING PLAN
DRAWING NO. S-02
SHEET NO. 04.02

Connecticut DOT Boring Report

Driller: M. Childs		Hole No.: B-1	
Inspector: R. Pion/G. Arzt	Town: Stafford	Stat./Offset: 51+16/1.7' Rt	
Engineer: R. Pion	Project No.: 0134-0147	Northing: 915069	
Start Date: 7-19-17	Route No.: 190 & 319	Easting: 1112582	
Finish Date: 7-20-17	Bridge No.:	Surface Elevation: 507.54	
Project Description: Roundabout Installation			
Casing Size/Type: 4" HFJ	Sampler Type/Size: 1 3/8" ID SS	Core Barrel Type: NQ2	
Hammer Wt.: Fall: in.	Hammer Wt.: 140 Fall: 30in.		
Groundwater Observations: @3.5 after 0 hours			

SAMPLES

Depth (ft)	Sample Type/No.	Blows on Sampler per 6 inches	Pen. (in.)	Rec. (in.)	RQD %	Generalized Strata Description	Material Description and Notes	Elevation (ft)
0	S-1	11 15 14 15	24	14		PAVEMENT STRUCTURE		
						GRAVELLY SAND	Brown c-f SAND, and c-f GRAVEL, trace silt	505
5	S-2	6 18 42 14	24	9			Gray-Brown c-f SAND, some f-m gravel	500
10	S-3	21 80	9	4			Gray rock pieces	495
15	S-4	20 24 25 24	24	12			Gray completely decomposed rock	490
20						BEDROCK		
	C-1		60	59	97		Gray medium grained, massive bedded, unfractured, fresh gneiss Core times in min/ft: 9.5, 8.5, 6.5, 9.0, 9.5	485
25	C-2		60	36	28		Gray medium grained, medium bedded, slightly fractured, fresh gneiss Core times in min/ft: 6.0, 2.5, 2.0, 3.5, 6.0	480
30							END OF BORING 30ft	
35								475
40								470
45								465
50								460

Sample Type: S = Split Spoon C = Core UP = Undisturbed Piston V = Vane Shear Test
Proportions Used: Trace = 1 - 10%, Little = 10 - 20%, Some = 20 - 35%, And = 35 - 50%

Total Penetration in Earth: 20ft Rock: 10ft No. of Soil Samples: 4 No. of Core Runs: 2	NOTES: Pavement structure consists of 9 inches of bituminous pavement on 24 inches of subbase	Sheet 1 of 1 SM-001-M REV. 1/02

Connecticut DOT Boring Report

Driller: C. Knight		Hole No.: B-2	
Inspector: G. Arzt	Town: Stafford	Stat./Offset: 51+07/30.0' Lft	
Engineer: R. Pion	Project No.: 0134-0147	Northing: 915062	
Start Date: 7-26-17	Route No.: 190 & 319	Easting: 1112614	
Finish Date: 7-26-17	Bridge No.:	Surface Elevation: 507.05	
Project Description: Roundabout Installation			
Casing Size/Type: 3" HFJ	Sampler Type/Size: 1 3/8" ID SS	Core Barrel Type: NQ2	
Hammer Wt.: Fall: in.	Hammer Wt.: 140 Fall: 30in.		
Groundwater Observations: @3.5 after 0 hours			

SAMPLES

Depth (ft)	Sample Type/No.	Blows on Sampler per 6 inches	Pen. (in.)	Rec. (in.)	RQD %	Generalized Strata Description	Material Description and Notes	Elevation (ft)
0	S-1	2 2 1 70	20	3		GRAVELLY SAND	Gray c-f GRAVEL, and c-f SAND, trace silt	505
5	S-2	8 7 7 10	24	10			Brown f-c SAND, some c-f gravel, trace silt	500
10	S-3	17 19 26 26	24	12			Gray-Brown c-f SAND, and c-f GRAVEL, trace silt	495
15	S-4	38 13 29 19	24	14			Gray c-f SAND, trace f gravel, trace silt	490
20	S-5	76	6				Gray-Brown c-f SAND, and c-f GRAVEL, trace silt	
						BEDROCK		485
25	C-1		60	55.5	82		Gray medium grained, massive bedded, slightly fractured, slightly weathered gneiss Core times in min/ft: 2.0, 1.5, 1.0, 1.5, 1.5	480
30	C-2		60	56	73		Gray medium grained, massive bedded, unfractured, fresh gneiss Core times in min/ft: 1.0, 1.0, 1.0, 1.0, 2.0	
35							END OF BORING 31.5ft	475
40								470
45								465
50								460

Sample Type: S = Split Spoon C = Core UP = Undisturbed Piston V = Vane Shear Test
Proportions Used: Trace = 1 - 10%, Little = 10 - 20%, Some = 20 - 35%, And = 35 - 50%

Total Penetration in Earth: 21.5ft Rock: 10ft No. of Soil Samples: 4 No. of Core Runs: 2	NOTES: Encountered 24" of blowback at 15 foot sample	Sheet 1 of 1 SM-001-M REV. 1/02

Connecticut DOT Boring Report

Driller: C. Knight		Hole No.: B-3	
Inspector: G. Arzt	Town: Stafford	Stat./Offset: 5+72/24.0' Rt	
Engineer: R. Pion	Project No.: 0134-0147	Northing: 915021	
Start Date: 7-25-17	Route No.: 190 & 319	Easting: 1112630	
Finish Date: 7-25-17	Bridge No.:	Surface Elevation: 508.56	
Project Description: Roundabout Installation			
Casing Size/Type: 3" HFJ	Sampler Type/Size: 1 3/8" ID SS	Core Barrel Type: NQ2	
Hammer Wt.: Fall: in.	Hammer Wt.: 140 Fall: 30in.		
Groundwater Observations: @3.5 after 0 hours			

SAMPLES

Depth (ft)	Sample Type/No.	Blows on Sampler per 6 inches	Pen. (in.)	Rec. (in.)	RQD %	Generalized Strata Description	Material Description and Notes	Elevation (ft)
0	S-1	1 1 1 1	24	12		GRAVELLY SAND	Black c-f SAND, little f-m gravel, trace silt	
5	S-2	9 2 1 3	24	1		SILTY SAND	Black f-c SAND, some silt, trace f gravel	505
						GRAVELLY SAND		500
10	S-3	12 13 18 14	24	8			Gray c-f SAND, some c-f gravel, trace silt	495
15	S-4	11 12 20 50	18	10			Gray c-f SAND, little silt, trace f gravel	
	C-1		18		100	BOULDER	Gray medium grained, massive bedded, unfractured, fresh gneiss Core times in min/ft: 1.5, 0.5	
	S-5	15 19 15 25	24	14		GRAVELLY SAND	Gray c-f GRAVEL, and c-f SAND, trace silt	490
20	S-6	11 30 39 27	24	10			Gray c-f SAND, and f-m GRAVEL, trace silt	
25	S-7	34 56 80	14	6			Gray c-f SAND, little f gravel, trace silt	485
30	S-8	90	4	3			Gray c-f SAND, little f-m gravel, trace silt	480
						BEDROCK		
35	C-2		60	58	100		Gray medium grained, massive bedded, slightly fractured, fresh gneiss Core times in min/ft: 2.0, 2.0, 2.0, 1.5, 2.0	475
40	C-3		60	61	88		Gray medium grained, massive bedded, slightly fractured, fresh gneiss Core times in min/ft: 2.0, 1.5, 1.0, 1.5, 1.5	470
45							END OF BORING 41.5ft	465
50								460

Sample Type: S = Split Spoon C = Core UP = Undisturbed Piston V = Vane Shear Test
Proportions Used: Trace = 1 - 10%, Little = 10 - 20%, Some = 20 - 35%, And = 35 - 50%

Total Penetration in Earth: 31.5ft Rock: 10ft No. of Soil Samples: 8 No. of Core Runs: 3	NOTES:	Sheet 1 of 1 SM-001-M REV. 1/02

Connecticut DOT Boring Report

Driller: M. Childs		Hole No.: B-4	
Inspector: G. Arzt	Town: Stafford	Stat./Offset: 34+96/1.8' Lft	
Engineer: R. Pion	Project No.: 0134-0147	Northing: 914958	
Start Date: 7-20-17	Route No.: 190 & 319	Easting: 1112664	
Finish Date: 7-21-17	Bridge No.:	Surface Elevation: 507.2	
Project Description: Roundabout Installation			
Casing Size/Type: 4" HFJ	Sampler Type/Size: 1 3/8" ID SS	Core Barrel Type: NQ2	
Hammer Wt.: Fall: in.	Hammer Wt.: 140 Fall: 30in.		
Groundwater Observations: @4.5 after 0 hours			

SAMPLES

Depth (ft)	Sample Type/No.	Blows on Sampler per 6 inches	Pen. (in.)	Rec. (in.)	RQD %	Generalized Strata Description	Material Description and Notes	Elevation (ft)
0	S-1	2 6 11 6	24	12		GRAVELLY SAND	Gray c-f SAND, some f-c gravel, trace silt	505
5	S-2	2 3 7 8	24	12		SILTY SAND	Gray f-c SAND, little silt	500
10	S-3	1 1 1 1	24	17			Gray f-c SAND, some silt	
	S-4	100	2	1.5		BOULDER	Gray completely decomposed rock	495
15	C-1		36	19	29	GRAVELLY SAND	Gray medium bedded, slightly fractured, slightly weathered, medium strong gneiss Core times in min/ft: 5.0, 2.0, 2.0	
20	S-5	4 16 24 23	24	12			Gray c-f GRAVEL, and f-c SAND, little silt	490
	S-6	15 31 33 35	24	18			Gray c-f SAND, litte f-m gravel	485
25						BEDROCK		
30	C-2		60	47	78		Gray medium grained, massive bedded, unfractured, fresh gneiss Core times in min/ft: 6.5, 6.5, 5.5, 5.5, 4.5	480
	S-7	20 60	7	7			Gray completely weathered rock	
35	C-3		60	59	82		Gray medium grained, massive bedded, unfractured, fresh gneiss Core times in min/ft: 6.0, 8.5, 11.5, 15.0, 12.0	475
40	C-4		60	59	97		Gray medium grained, massive bedded, unfractured, fresh gneiss Core times in min/ft: 6.0, 6.0, 5.0, 6.5, 9.5	470
45							END OF BORING 41ft	465
50								460

Sample Type: S = Split Spoon C = Core UP = Undisturbed Piston V = Vane Shear Test
Proportions Used: Trace = 1 - 10%, Little = 10 - 20%, Some = 20 - 35%, And = 35 - 50%

Total Penetration in Earth: 31ft Rock: 10ft No. of Soil Samples: 7 No. of Core Runs: 4	NOTES:	Sheet 1 of 1 SM-001-M REV. 1/02

DESIGNER/DRAFTER: RDH
CHECKED BY: NJM
Plotted Date: 7/25/2019
Filename: pw:\\ctdot.projectwisenline.com:CTDOT\Documents\01.0 - Projects - Active\0134-0147\330_Design_Data\Structure_Bridge\General_Plan_01_S8_SHEET_0134-0147.dgn

REV.	DATE	REVISION DESCRIPTION
-	-	-
-	-	-
-	-	-

SCALE AS NOTED

SIGNATURE/ BLOCK:

OFFICE OF ENGINEERING
2800 BERLIN TURNPIKE
NEWINGTON, CT 06111

APPROVED BY:

STATE OF CONNECTICUT
DEPARTMENT OF TRANSPORTATION

MODERN ROUNDABOUT
AT ROUTE 190 AND ROUTE 319

TOWN OF STAFFORD

PROJECT NO. 0134-0147
DRAWING TITLE: BORING LOGS
DRAWING NO. S-03
SHEET NO. 04.03

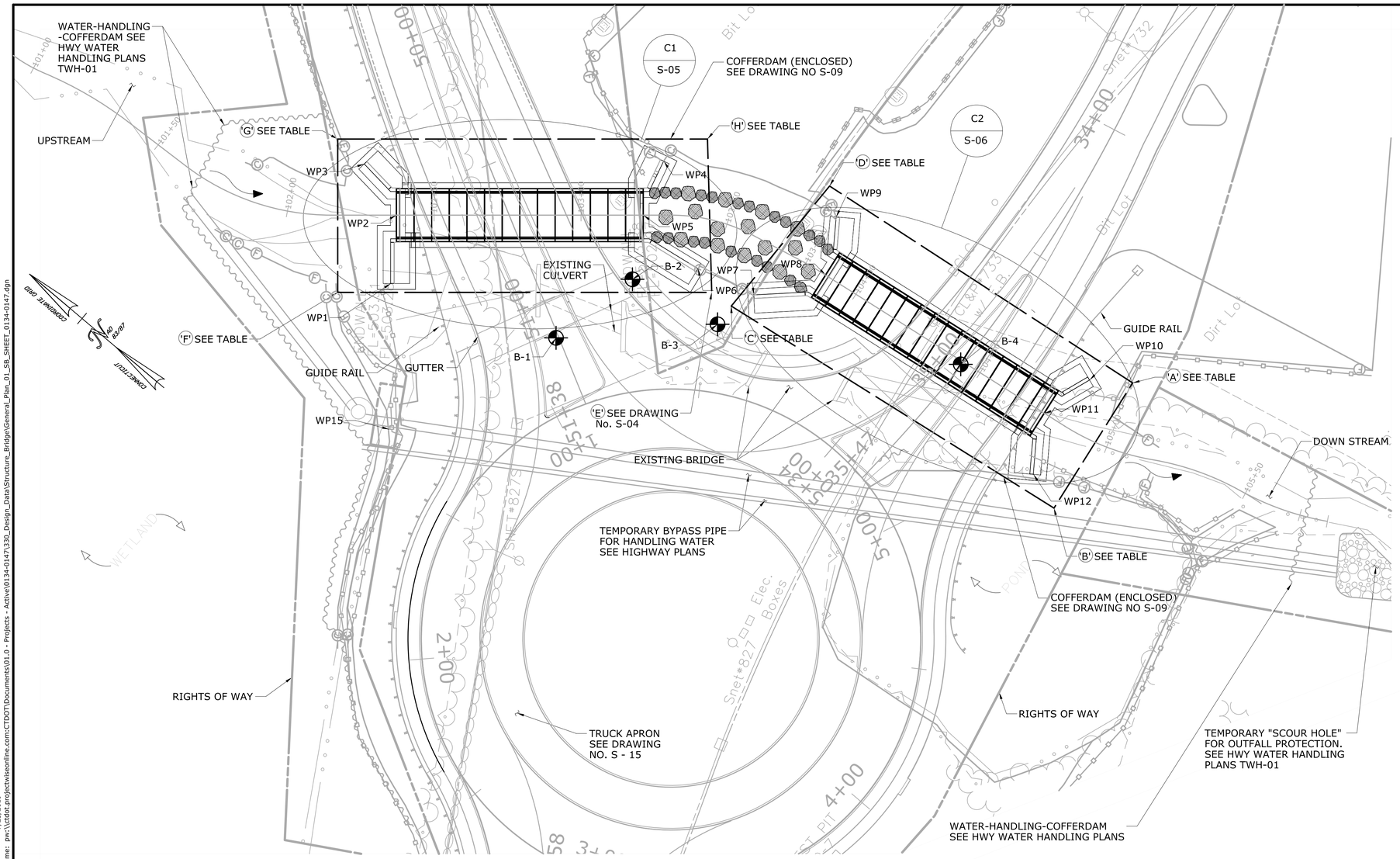

GENERAL PLAN

SCALE: 1" = 20'

GENERAL NOTES

PRECAST CONCRETE: (BOX CULVERT, CUTOFF AND RETURN WALL) BASED ON f'c = 5 KSI @ 28 DAYS

DESIGN STRESSES (CAST-IN-PLACE CONCRETE):

CLASS PCC04460 CONCRETE BASED ON f'c = 4 KSI.

CAST-IN-PLACE TRUCK APRON SHALL BE PAID FOR UNDER "STAMPED CONCRETE" SEE HIGHWAY PLANS AND SPECIAL PROVISION FOR MATERIAL REQUIREMENTS.

REINFORCEMENT: SHALL CONFORM TO ASTM A615, GRADE 60 (GALVANIZED)

CONCRETE: THE SPECIFIED CONCRETE STRENGTH USED IN DESIGN, F'c, OF THE CONCRETE COMPONENTS IS NOTED ABOVE. THE MINIMUM COMPRESSIVE STRENGTH OF THE CONCRETE IN THE CONSTRUCTION COMPONENTS SHALL CONFORM TO THE REQUIREMENTS OF 'SECTION 6.01 CONCRETE FOR STRUCTURES'.

CONCRETE COVER: ALL REINFORCEMENT SHALL HAVE 2" COVER AND 3" OF COVER ON BASE AND SIDES OF ALL FOOTINGS UNLESS DIMENSIONED OTHERWISE.

LIVE LOAD: HL-93 AND PERMIT VEHICLES.

EXPOSED EDGES: EXPOSED EDGES OF CONCRETE SHALL BE BEVELED 1" X 1" UNLESS DIMENSIONED OTHERWISE.

PRECAST CONCRETE BOX CULVERT: THE CONTRACTOR SHALL CONSTRUCT AND INSTALL A PRECAST BOX CULVERT IN ACCORDANCE WITH THE SPECIAL PROVISION "16' X 8' PRECAST CONCRETE BOX CULVERT" AND TO THE DIMENSIONS AND DETAILS SHOWN ON THE PLANS.

THE FIRST DIMENSION GIVEN IN THE BOX CULVERT ITEM NAME IS THE NOMINAL INTERIOR WIDTH. THE SECOND DIMENSION GIVEN IN THE BOX CULVERT ITEM NAME IS THE NOMINAL INTERIOR HEIGHT.

CONSTRUCTION JOINTS: CONSTRUCTION JOINTS OTHER THAN THOSE SHOWN ON THE PLANS WILL NOT BE PERMITTED WITHOUT THE PRIOR APPROVAL OF THE ENGINEER. THE SURFACES BETWEEN THE NEW AND EXISTING CONCRETE SHALL BE FREE OF LOOSE MATERIAL, UNSOUND CONCRETE AND FOREIGN MATERIAL. THE SURFACES SHALL BE CLEANED TO THE SATISFACTION OF THE ENGINEER AND SHALL BE DAMPENED WITH POTABLE WATER JUST PRIOR TO PLACING THE CONCRETE.

DIMENSIONS AND ELEVATIONS: ALL DIMENSIONS ARE GIVEN IN FEET AND INCHES UNLESS OTHERWISE NOTED. ALL ELEVATIONS ARE GIVEN IN FEET. WHEN DIMENSIONS OR ELEVATIONS ARE GIVEN TO LESS THAN THREE DECIMAL PLACES. THE OMITTED DIGITS SHALL BE ASSUMED TO BE ZEROS.

UTILITIES: THE CONTRACTOR SHALL COORDINATE WITH LOCAL UTILITIES BEFORE BRIDGE WORK BEGINS. UTILITY LINES CROSSING ABOVE BOX CULVERT SHALL BE INSTALLED FOLLOWING THE INSTALLATION OF CULVERT 1 AND CULVERT 2 RESPECTIVELY. REVIEW OF CULVERT SHOP DRAWINGS AND AS-BUILT INFORMATION FOR KEY ELEMENTS OF THE CULVERTS AND HEADWALLS IS REQUIRED.

MAXIMUM RETAINING WALL BEARING PRESSURES	
STRENGTH LIMIT STATES	SERVICE LIMIT STATES
5.16 KSF	3.40 KSF

TRANSPORTATION DIMENSIONS AND WEIGHTS				
MEMBER	SHIPPING			
	LENGTH	HEIGHT	WIDTH	WEIGHT
NORTH CULVERT (C1)	6.0 FT	10.0 FT	18.0 FT	47250.0 LB
SOUTH CULVERT (C2)	5.5 FT	10.0 FT	18.0 FT	43350.0 LB
CUTOFF/RETURN WALL	26 FT	2.0 FT	1.0 FT	7800.0 LB

LEGEND

- SOILS BORING LOCATION
- EASEMENT
- 509 PROPOSED CONTOUR
- WETLAND/WATER LINE
- (509) EXSISTING CONTOUR
- EXISTING ROCK
- F FILL LINE
- C C CUT LINE

ITEM	BRIDGE COMPONENTS	PCC CLASS
FOOTING CONCRETE	WINGWALL FOOTINGS	PCC04460
ABUTMENT AND WALL CONCRETE	WINGWALL AND HEADWALL	PCC04460

TEMPORARY HYDRAULIC DATA

AVERAGE DAILY FLOW	2.6 CFS
AVERAGE SPRING FLOW	5.0 CFS
2-YEAR FREQUENCY DISCHARGE	40 CFS
TEMPORARY DESIGN DISCHARGE	40 CFS
TEMPORARY DESIGN FREQUENCY	2-YEAR
TEMPORARY HEADWATER ELEVATION	507.1 FT UPSTREAM 503.7 FT DOWNSTREAM

COFFERDAMS LAYOUT INFORMATION SEE 'COORDINATES' ON GENERAL PLAN

LOCATION	COORDINATE
A AT STATION 105 + 00.61	N 0914911.04 E 1112698.89
B AT STATION 104 + 42.97	N 0914904.04 E 1112649.36
C AT STATION 103 + 64.32	N 0915032.27 E 1112630.97
D AT STATION 103 + 74.86	N 0915033.06 E 1112683.74
E AT STATION 103 + 53.98	N 0915040.35 E 1112630.23
F AT STATION 102 + 17.20	N 0915137.56 E 1112548.09
G AT STATION 102 + 17.20	N 0915171.22 E 1112587.92
H AT STATION 103 + 39.25	N 0915075.11 E 1112669.13

CULVERT AND WINGWALL LAYOUT INFORMATION SEE 'COORDINATES' ON GENERAL PLAN

WORKING POINT (WP) LOCATION	COORDINATE
WP 1 AT STATION 102 + 35.20	N 0915125.76 E 1112562.01
WP 2 AT STATION 102 + 37.20	N 0915146.20 E 1112575.18
WP 3 AT STATION 102 + 26.22	N 0915158.86 E 1112587.27
WP 4 AT STATION 103 + 28.19	N 0915081.59 E 1112653.81
WP 5 AT STATION 103 + 21.20	N 0915075.08 E 1112635.28
WP 6 AT STATION 103 + 43.62	N 0915049.11 E 1112633.42
WP 7 AT STATION 103 + 69.32	N 0915028.88 E 1112638.84
WP 8 AT STATION 103 + 87.83	N 0915014.53 E 1112659.72
WP 9 AT STATION 103 + 81.77	N 0915024.55 E 1112677.16
WP 10 AT STATION 104 + 77.83	N 0914927.51 E 1112687.27
WP 11 AT STATION 104 + 75.83	N 0914927.38 E 1112671.89
WP 12 AT STATION 104 + 77.83	N 0914922.46 E 1112651.12

DESIGNER/DRAFTER: RDH
CHECKED BY: NJM
Plotted Date: 7/25/2019
Filename: pw:\\ctdot.projectwiseonline.com:CTDOT\Documents\01.0 - Projects - Active\0134-0147\330_Design_Data\Structure_Bridge\General_Plan_01_S8_SHEET_0134-0147.dgn

REV.	DATE	REVISION DESCRIPTION
-	-	-

SCALE AS NOTED

SIGNATURE/ BLOCK:

OFFICE OF ENGINEERING
2800 BERLIN TURNPIKE
NEWINGTON, CT 06111

APPROVED BY:

STATE OF CONNECTICUT
DEPARTMENT OF TRANSPORTATION

MODERN ROUNDABOUT
AT ROUTE 190 AND ROUTE 319

STAFFORD

PROJECT NO. 0134-0147

DRAWING TITLE: GENERAL PLAN

DRAWING NO. S-04

SHEET NO. 04.04

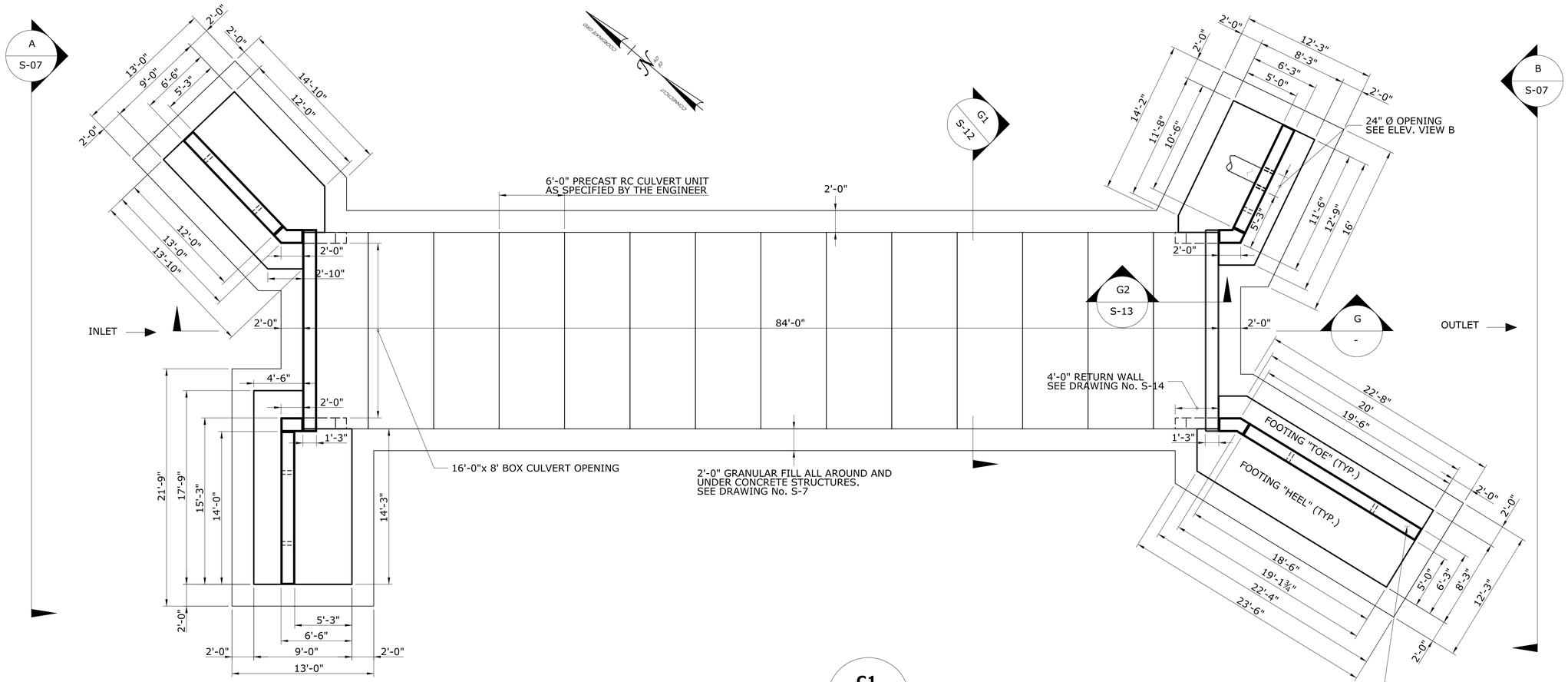

PLAN VIEW
SCALE: 3/16" = 1'-0"
C1
S-04

RETAINING WALL MAXIMUM DESIGN FOUNDATION PRESSURES	
STRENGTH LIMIT STATE	SERVICE LIMIT STATE
5.16 KSF	3.40 KSF

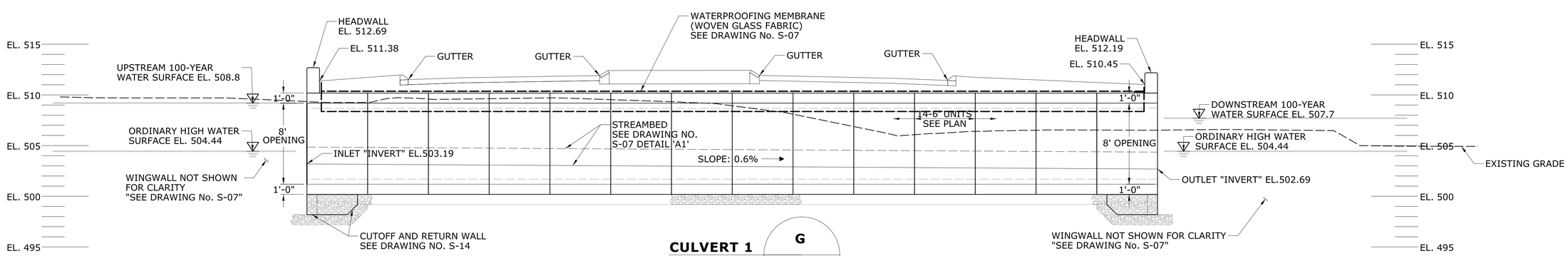

CULVERT 1
SCALE: 3/16" = 1'-0"
G
-

DESIGNER/DRAFTER: RDH
CHECKED BY: NJM
Plotted Date: 7/25/2019
Filename: pw:\\ctdot.projectwiseonline.com:CTDOT\Documents\01.0 - Projects - Active\0134-0147\330_Design_Data\Structure_Bridge\General_Plan_01_58_SHEET_0134-0147.dgn

REV.	DATE	REVISION DESCRIPTION
-	-	-
-	-	-
-	-	-
-	-	-
-	-	-
-	-	-

SCALE AS NOTED

SIGNATURE/
BLOCK:

OFFICE OF ENGINEERING
2800 BERLIN TURNPIKE
NEWINGTON, CT 06111

APPROVED BY:

STATE OF CONNECTICUT
DEPARTMENT
OF
TRANSPORTATION

MODERN ROUNDABOUT
AT ROUTE 190 AND ROUTE 319

TOWN OF STAFFORD

PROJECT NO. 0134-147
DRAWING TITLE: PLAN AND SECTION - BRIDGE NO. 07018

DRAWING NO. S-05
SHEET NO. 04.05

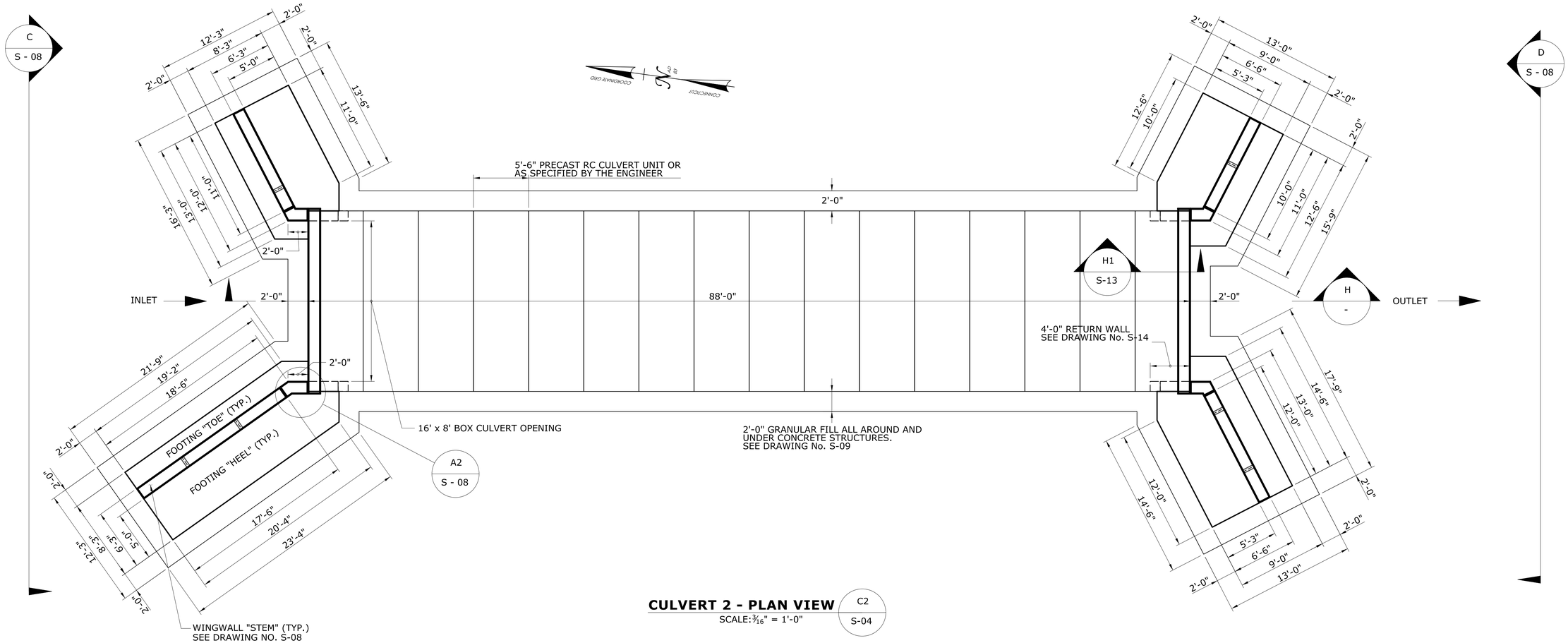

CULVERT 2 - PLAN VIEW

SCALE: 3/16" = 1'-0"

C2 / S-04

RETAINING WALL MAXIMUM DESIGN FOUNDATION PRESSURES	
STRENGTH LIMIT STATE	SERVICE LIMIT STATE
5.16 KSF	3.40 KSF

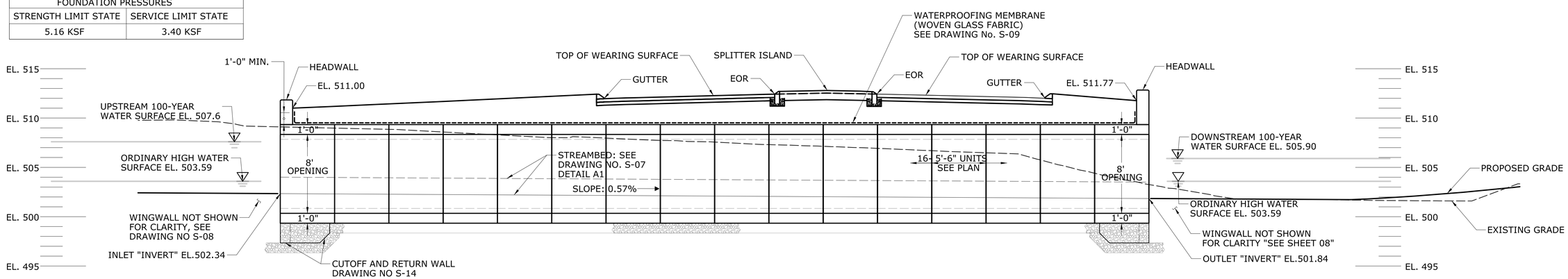

SECTION

SCALE: 3/16" = 1'-0"

H / -

DESIGNER/DRAFTER: RDH
CHECKED BY: NJM
Plotted Date: 7/25/2019
Filename: pw:\\ctdot.projectwiseonline.com:CTDOT\Documents\01.0 - Projects - Active\0134-0147\330_Design_Data\Structure_Bridge\SB_134_147_CULVERT 2_PLN__BDG_SHEET_0134-0147.dgn

REV.	DATE	REVISION DESCRIPTION
-	-	-

SCALE AS NOTED

SIGNATURE/BLOCK:

OFFICE OF ENGINEERING
2800 BERLIN TURNPIKE
NEWINGTON, CT 06111

APPROVED BY:

STATE OF CONNECTICUT
DEPARTMENT OF TRANSPORTATION

MODERN ROUNDABOUT
AT ROUTE 190 AND ROUTE 319

TOWN OF STAFFORD

PROJECT NO. 0134-0147

DRAWING TITLE: PLAN AND SECTION - BRIDGE NO. 07019

DRAWING NO. S-06

SHEET NO. 04.06

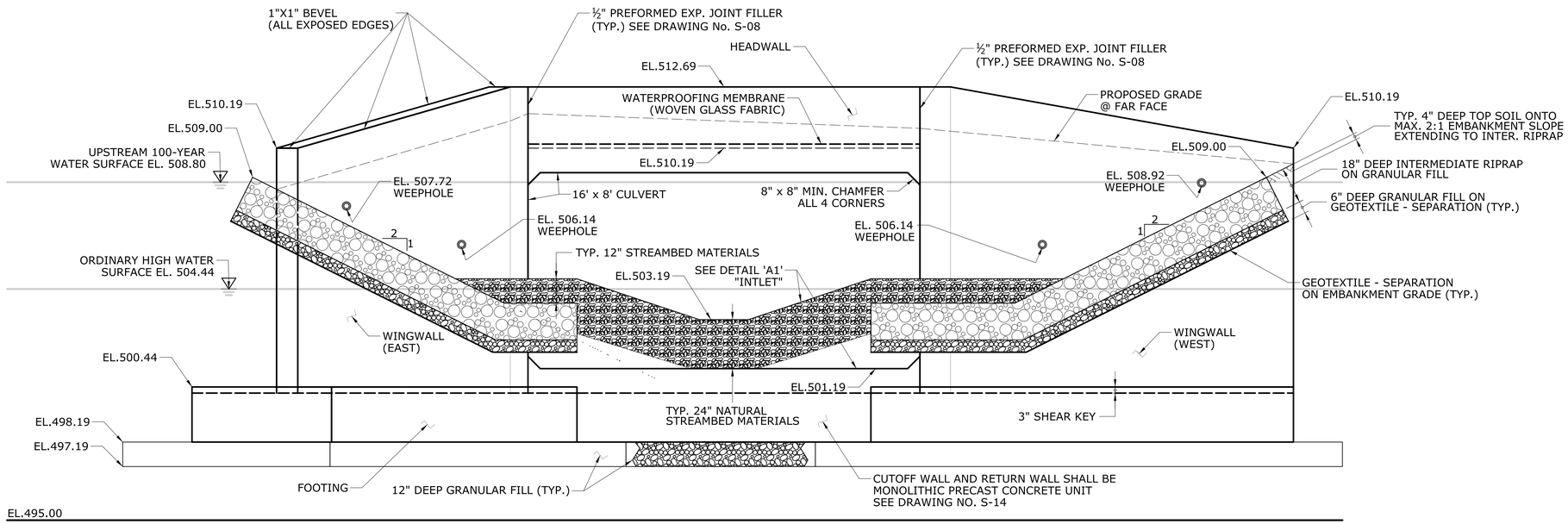

ELEVATION VIEW A / S-05
SCALE: ⅜" = 1'-0"

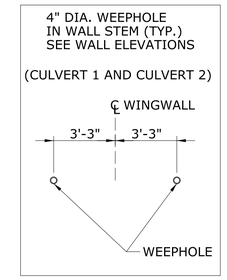

NOTE:
STRUCTURE " COFFERDAM " NOT SHOWN FOR CLARITY OF INLET AND OUTLET. COFFERDAM SHALL HAVE MINIMUM UPSTREAM ELEVATION 507.60 AND CONTRACTOR SHALL ESTABLISH MAXIMUM ELEVATION. SEE DRAWING No. S-09.

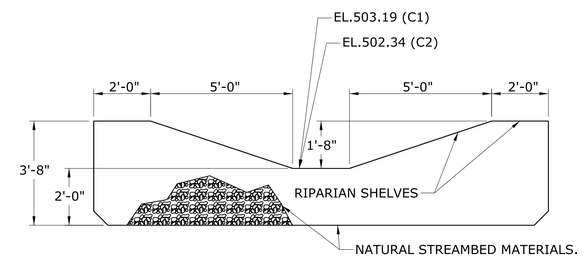

INLET

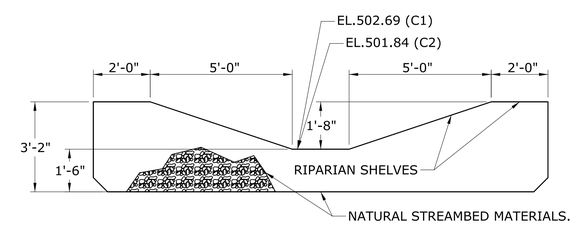

OUTLET

NOTE:
NATURAL STREAMBED MATERIAL SHALL BE RELOCATED FOR REUSE INSIDE AND ALONG THE CULVERT LENGTH. WHERE NATURAL STREAMBED MATERIAL IS NOT ADEQUATE, SUPPLEMENTAL STREAMBED MATERIAL SHALL BE USED. SEE SPECIAL PROVISION "SUPPLEMENTAL STREAMBED CHANNEL MATERIAL."

DETAIL 'A1': N.S.M. IN CULVERT

SCALE: ⅜" = 1'-0"

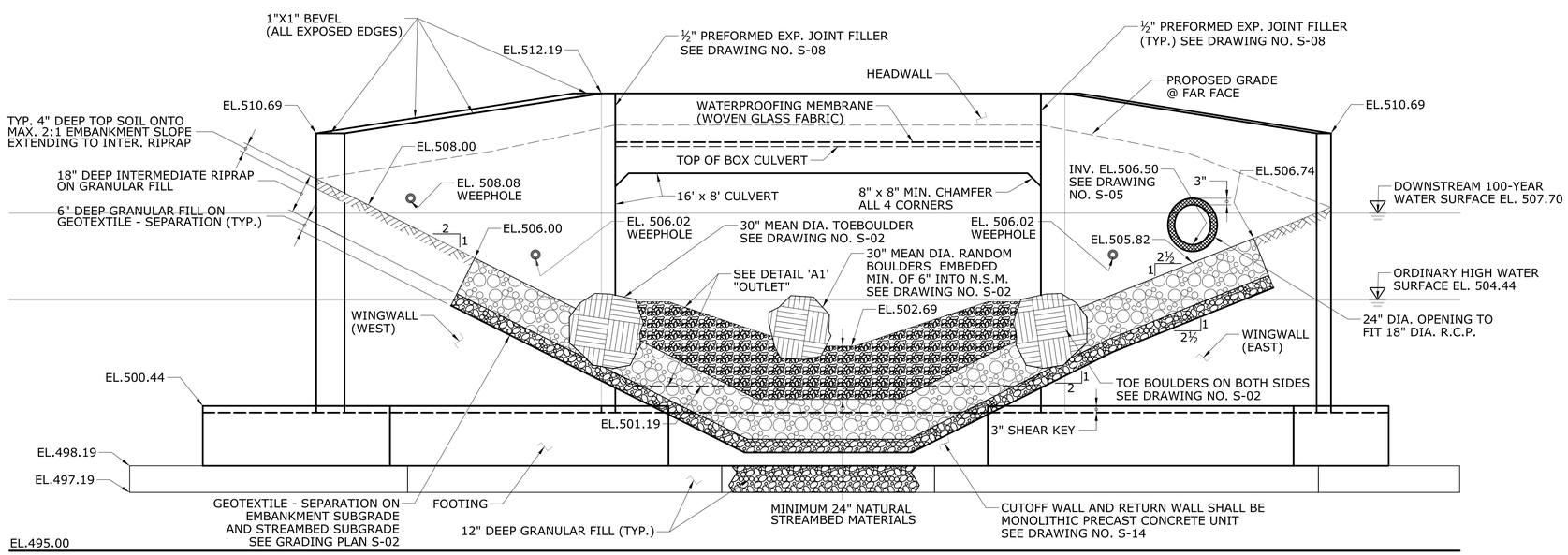

ELEVATION VIEW B / S-05
SCALE: ⅜" = 1'-0"

REV.	DATE	REVISION DESCRIPTION
-	-	-
-	-	-
-	-	-
-	-	-
-	-	-

DESIGNER/DRAFTER: RDH
CHECKED BY: NJM
Plotted Date: 7/25/2019
Filename: pw:\\ctdot.projectwiseonline.com:CTDOT\Documents\01.0 - Projects - Active\0134-0147\330_Design_Data\Structure_Bridge\SB_134_147_Culv1 Pln and Elev_BDG_SHEET_0134-0147.dgn

SCALE AS NOTED

SIGNATURE/
BLOCK:

OFFICE OF ENGINEERING
2800 BERLIN TURNPIKE
NEWINGTON, CT 06111

APPROVED BY:

STATE OF CONNECTICUT
DEPARTMENT
OF
TRANSPORTATION

MODERN ROUNDABOUT
AT ROUTE 190 AND ROUTE 319

TOWN OF STAFFORD

PROJECT NO. 0134-0147
DRAWING TITLE: CULVERT 1 - INLET AND OUTLET ELEVATIONS
DRAWING NO. S-07
SHEET NO. 04.07

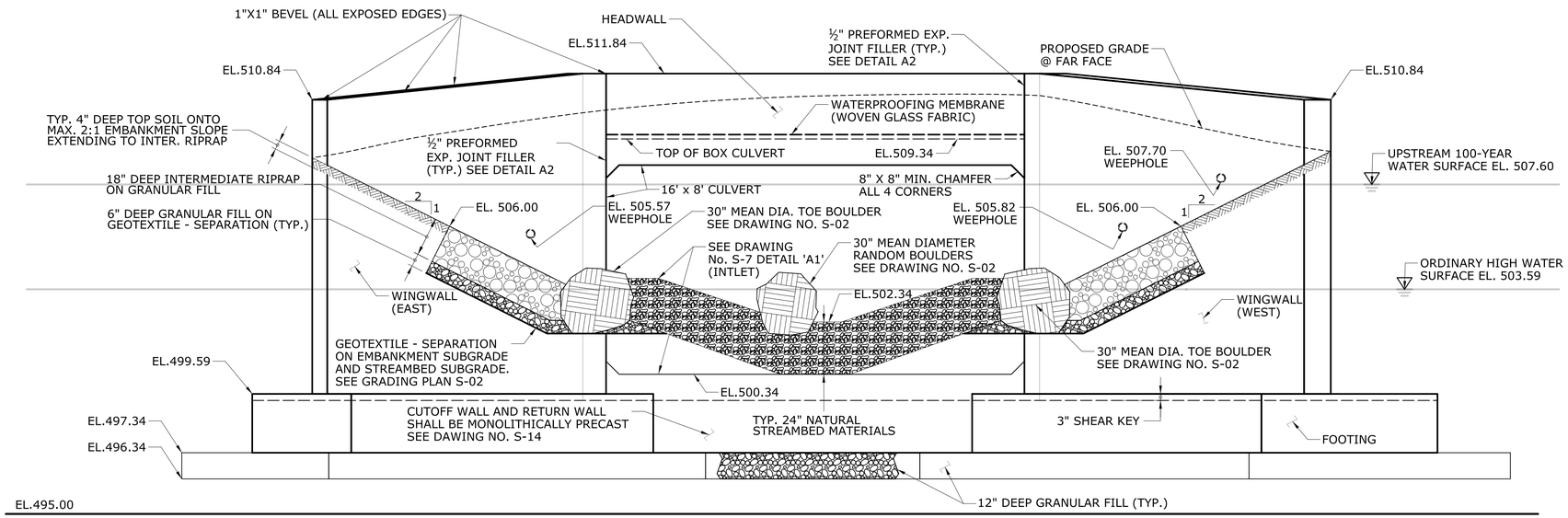

ELEVATION VIEW C / S-06

SCALE:⅜" = 1'-0"

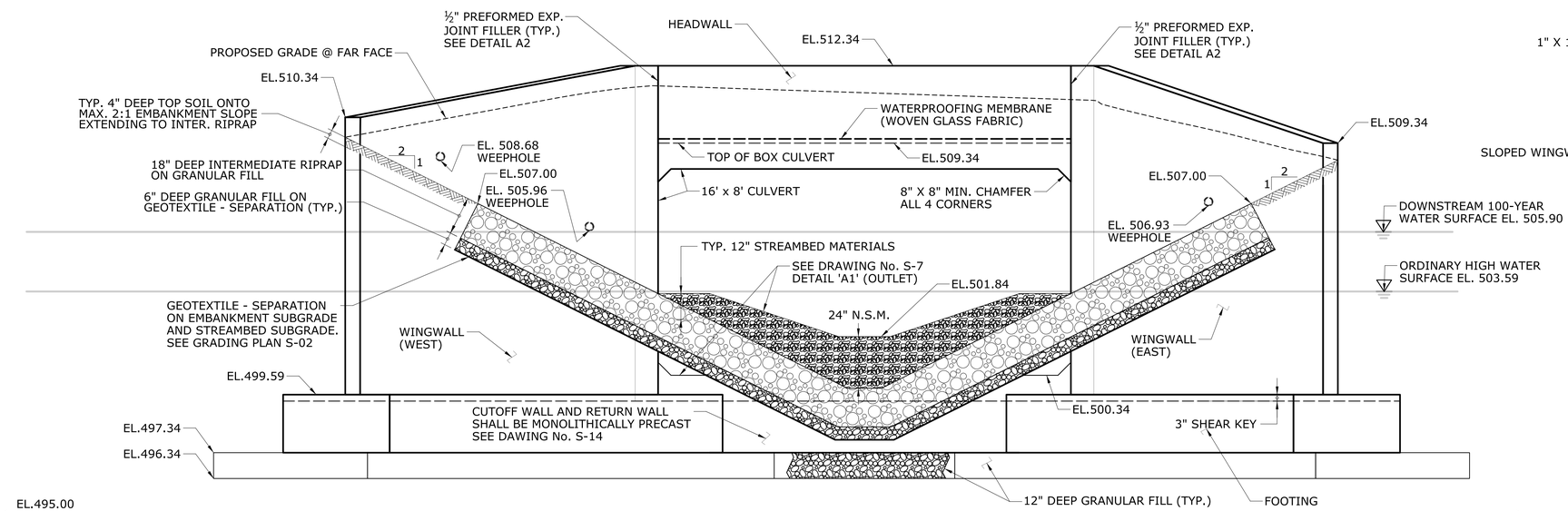

ELEVATION VIEW D / S-06

SCALE:⅜" = 1'-0"

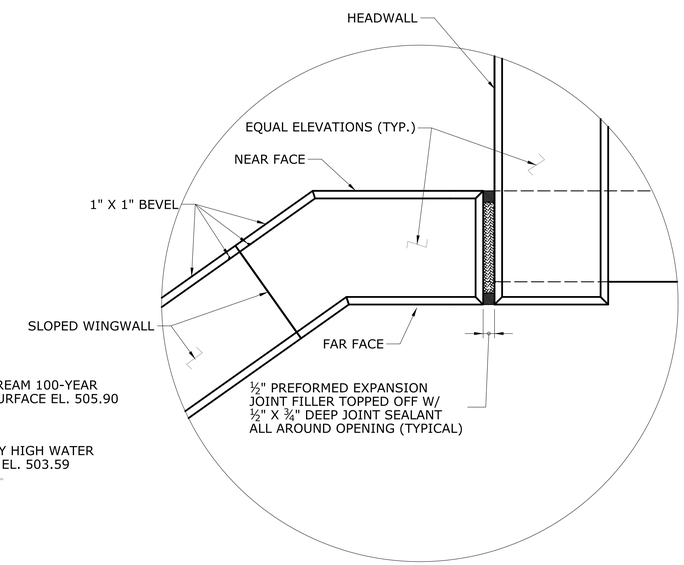

TYP. WINGWALL JUNCTION DETAIL A2 / S-06

SCALE:1½" : 1'-0"

NOTE:
STRUCTURE " COFFERDAM " NOT SHOWN FOR CLARITY OF INLET AND OUTLET. COFFERDAM SHALL HAVE MINIMUM DOWNSTREAM ELEVATION 505.10 AND CONTRACTOR SHALL ESTABLISH MAXIMUM ELEVATION. SEE COFFERDAM DETAILS ON DRAWING No. S-09.

DESIGNER/DRAFTER: RDH
CHECKED BY: NJM
Plotted Date: 7/25/2019
Filename: pw:\\ctdot.projectwiseonline.com:CTDOT\Documents\01.0 - Projects - Active\0134-0147\330_Design_Data\Structure_Bridge\SB_134_147_CULVERT 2_PLN__BDG_SHEET_0134-0147.dgn

REV.	REVISION DESCRIPTION	DATE
-	-	-
-	-	-
-	-	-

SCALE AS NOTED

SIGNATURE/ BLOCK:

OFFICE OF ENGINEERING
2800 BERLIN TURNPIKE
NEWINGTON, CT 06111

APPROVED BY:

STATE OF CONNECTICUT
DEPARTMENT OF TRANSPORTATION

MODERN ROUNDABOUT
AT ROUTE 190 AND ROUTE 319

TOWN OF STAFFORD

PROJECT NO. 0134-0147

DRAWING TITLE: CULVERT 2 - INLET AND OUTLET ELEVATIONS

DRAWING NO. S-08

SHEET NO. 04.08

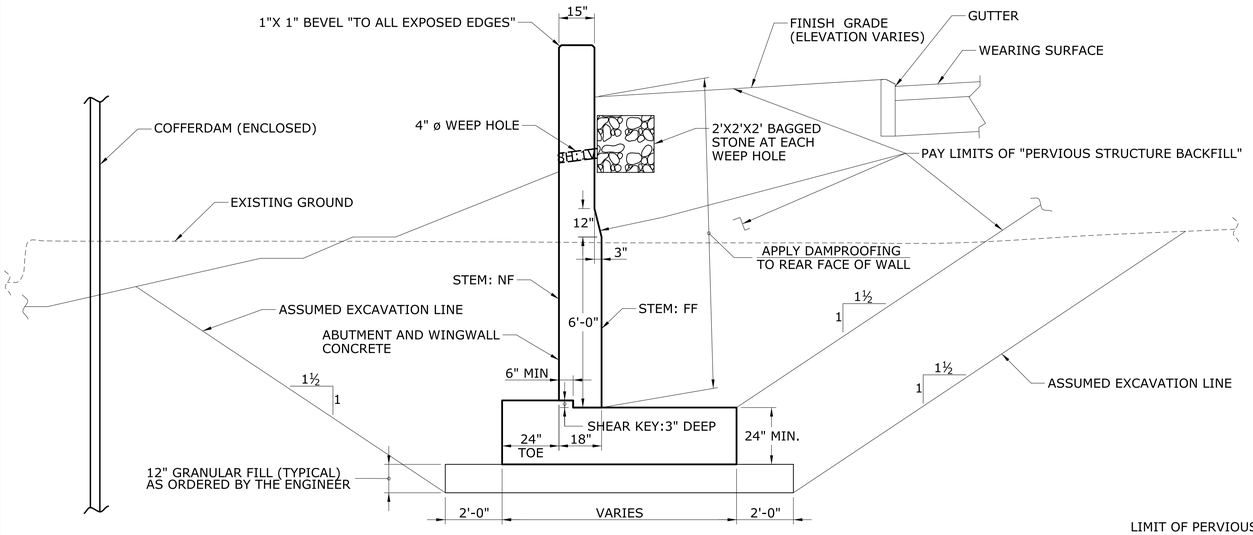

TYPICAL WINGWALL SECTION

SCALE: ⅜" = 1'-0"

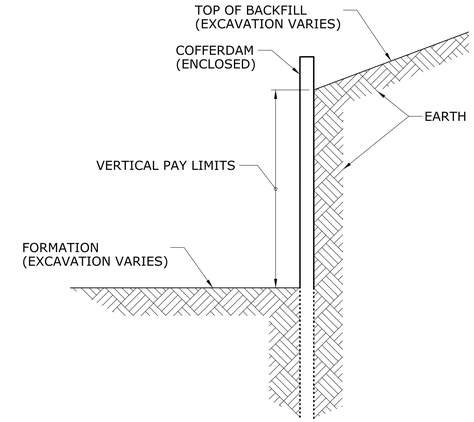

TYPICAL COFFERDAM - PAY LIMITS

N.T.S.

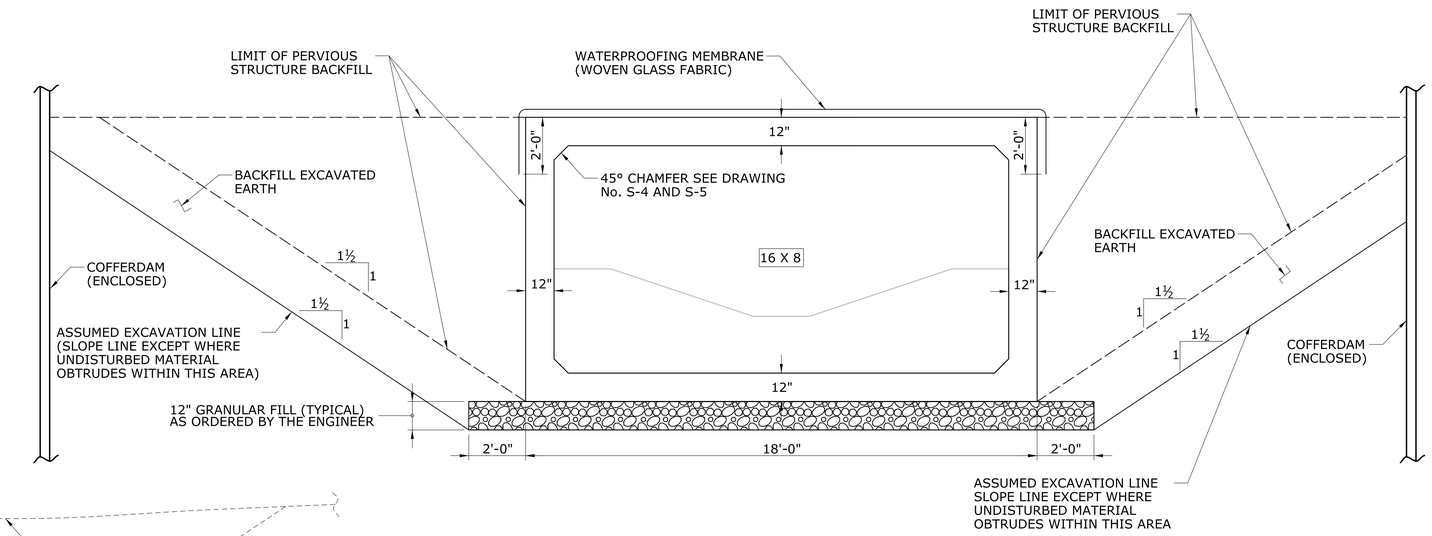

TYPICAL - SECTION E

SCALE: ⅜" = 1'-0"

S-02

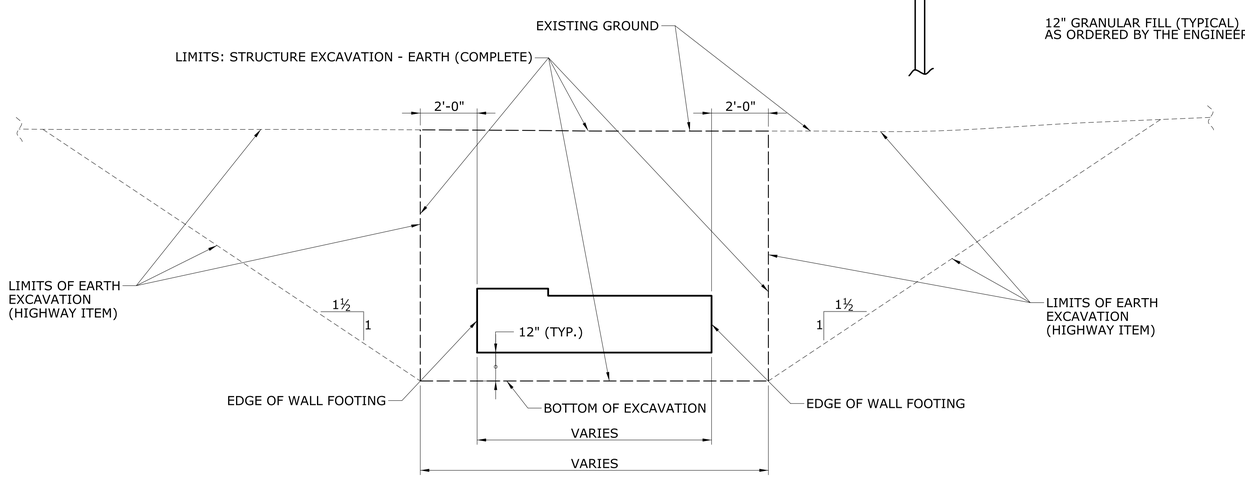

PAY LIMITS OF EXCAVATION ITEMS AT THE WALL

SCALE: ⅜" = 1'-0"

NOTE:
TEMPORARY ENCLOSED COFFERDAM TO BE DESIGNED BY THE CONTRACTOR, TYPICAL LOCATION MAY BE ADJUSTED TO AVOID CONFLICT WITH THE PROPOSED STRUCTURE AND UNSUITABLE SOIL CONDITIONS. COFFERDAM SHALL BE PAID FOR UNDER THE ITEM "COFFERDAM AND DEWATERING"

UPSTREAM:
TOP OF COFFERDAM MINIMUM ELEVATION 507.6 FT
DOWNSTREAM:
TOP OF COFFERDAM MINIMUM ELEVATION 504.0 FT

DESIGNER/DRAFTER: RDH
CHECKED BY: NJM
Plotted Date: 7/25/2019
Filename: pw:\\ctdot.projectwiseonline.com:CTDOT\Documents\01.0 - Projects - Active\0134-0147\330_Design_Data\Structure_Bridge\SB_134_147_Culv1 Pln and Elev_BDG_SHEET_0134-0147.dgn

REV.	DATE	REVISION DESCRIPTION
-	-	-
-	-	-
-	-	-
-	-	-
-	-	-
-	-	-

SCALE AS NOTED

SIGNATURE/
BLOCK:

OFFICE OF ENGINEERING
2800 BERLIN TURNPIKE
NEWINGTON, CT 06111

APPROVED BY:

STATE OF CONNECTICUT
DEPARTMENT
OF
TRANSPORTATION

MODERN ROUNDABOUT
AT ROUTE 190 AND ROUTE 319

TOWN OF STAFFORD

PROJECT NO. 0134-0147

DRAWING TITLE: TYPICAL WINGWALL SECTION AND COFFERDAM DETAILS

DRAWING NO. S-09

SHEET NO. 04.09

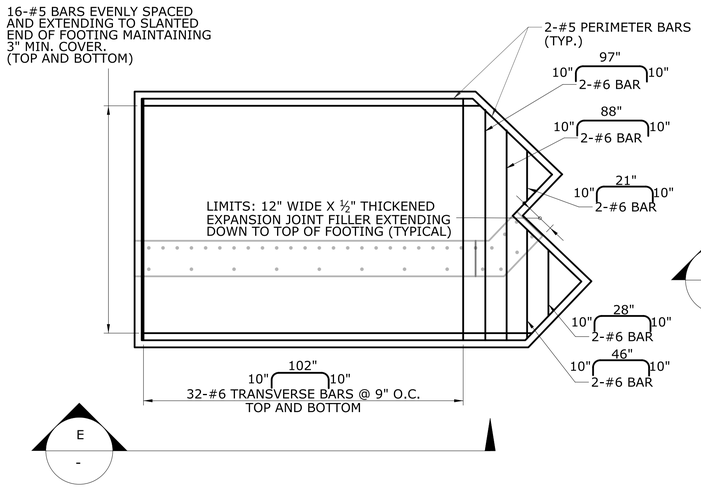

EAST WINGWALL: FOOTING REINFORCING

SCALE: ⅜" = 1'-0"

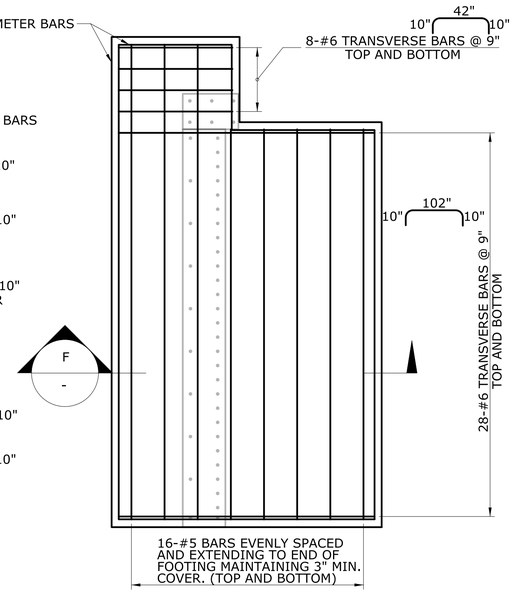

WEST WINGWALL: FOOTING REINFORCING

SCALE: ⅜" = 1'-0"

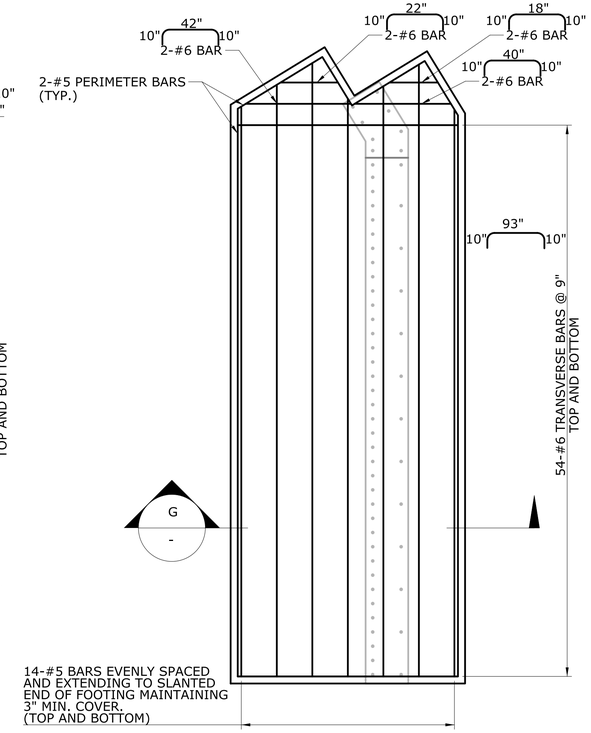

WEST WINGWALL: FOOTING REINFORCING

SCALE: ⅜" = 1'-0"

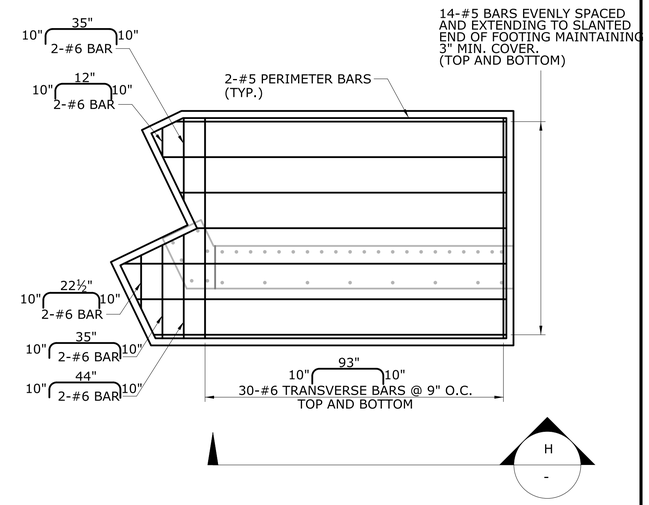

EAST WINGWALL: FOOTING REINFORCING

SCALE: ⅜" = 1'-0"

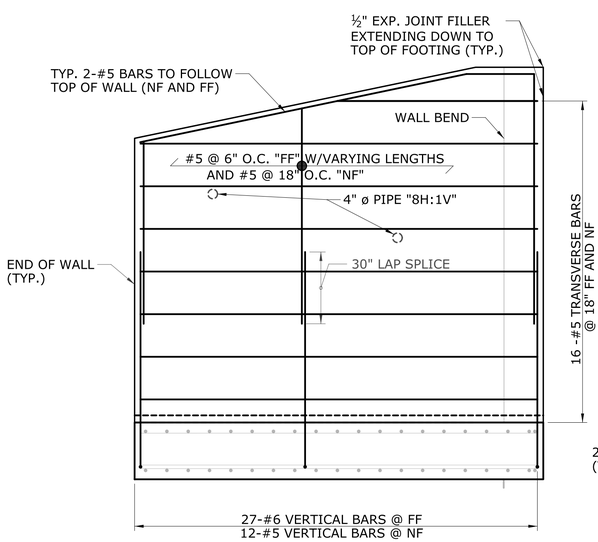

FF REINF. WINGWALL SECTION

SCALE: ⅜" = 1'-0

E
-

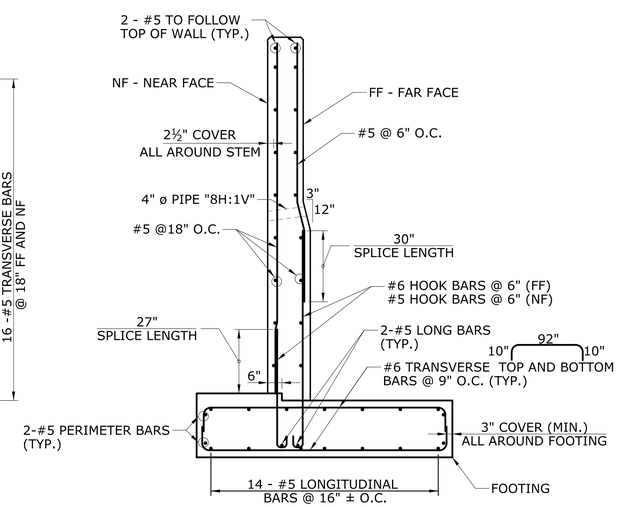

SECTION

SCALE: ⅜" = 1'-0

F
-

WINGWALL STEM:
SHALL BE PAID FOR UNDER THE ITEM "ABUTMENT AND WALL CONCRETE"

WINGWALL FOOTING:
SHALL BE PAID FOR UNDER THE ITEM "FOOTING CONCRETE"

REINFORCING:
SHALL BE PAID FOR UNDER THE ITEM "DEFORMED STEEL BARS -GALVANIZED"

INLET REINFORCING DETAIL

SCALE: AS SHOWN

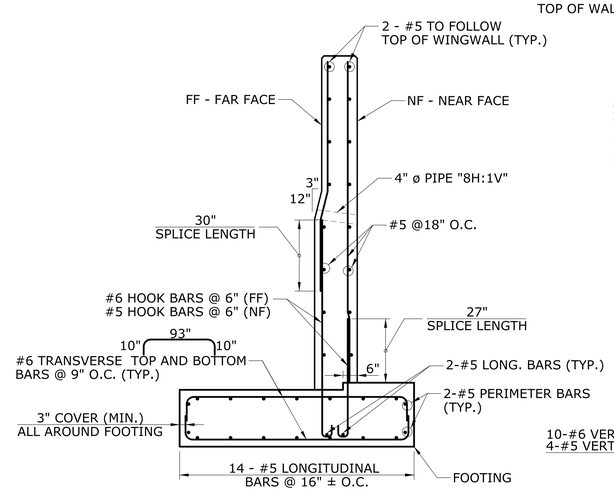

SECTION

SCALE: ⅜" = 1'-0

G
-

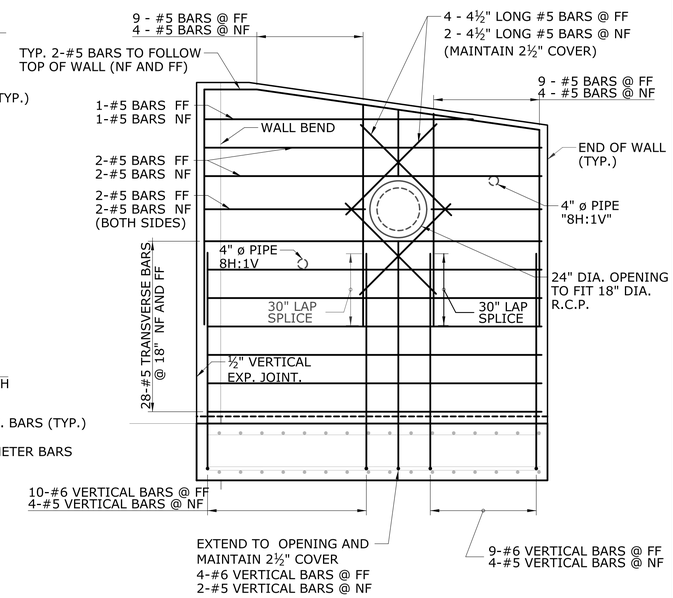

FF REINF. WINGWALL SECTION

SCALE: ⅜" = 1'-0

H
-

OUTLET REINFORCING DETAIL

SCALE: AS SHOWN

REV.	REVISION DESCRIPTION	DATE
-	-	-
-	-	-
-	-	-

DESIGNER/DRAFTER: RDH
CHECKED BY: NJM
Plotted Date: 7/25/2019
Filename: pw:\\ctdot.projectwiseonline.com:CTDOT\Documents\01.0 - Projects - Active\0134-0147\330_Design_Data\Structure_Bridge\SB_134_147_Culv1 Pln and Elev_BDG_SHEET_0134-0147.dgn

SCALE AS NOTED

SIGNATURE/ BLOCK:

OFFICE OF ENGINEERING
2800 BERLIN TURNPIKE
NEWINGTON, CT 06111

APPROVED BY:

STATE OF CONNECTICUT
DEPARTMENT OF TRANSPORTATION

MODERN ROUNDABOUT
AT ROUTE 190 AND ROUTE 319

TOWN OF STAFFORD

PROJECT NO. 0134-0147

DRAWING TITLE: CULVERT 1 REINFORCING - WINGWALLS AND FOOTINGS

DRAWING NO. S-10

SHEET NO. 04.10

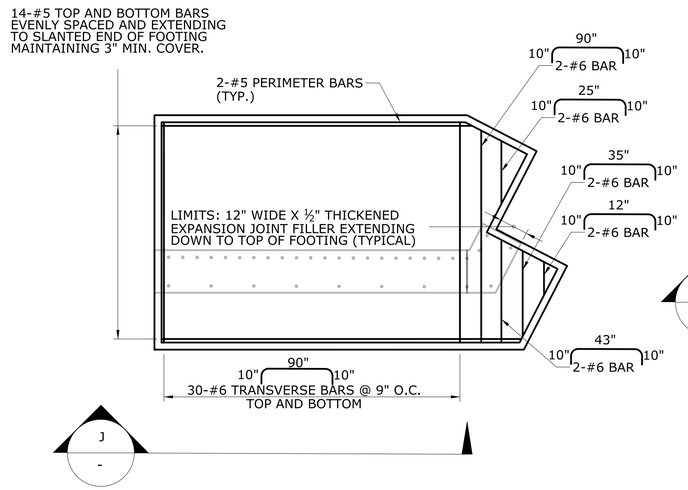

EAST WINGWALL: FOOTING REINFORCING

SCALE: ⅜" = 1'-0"

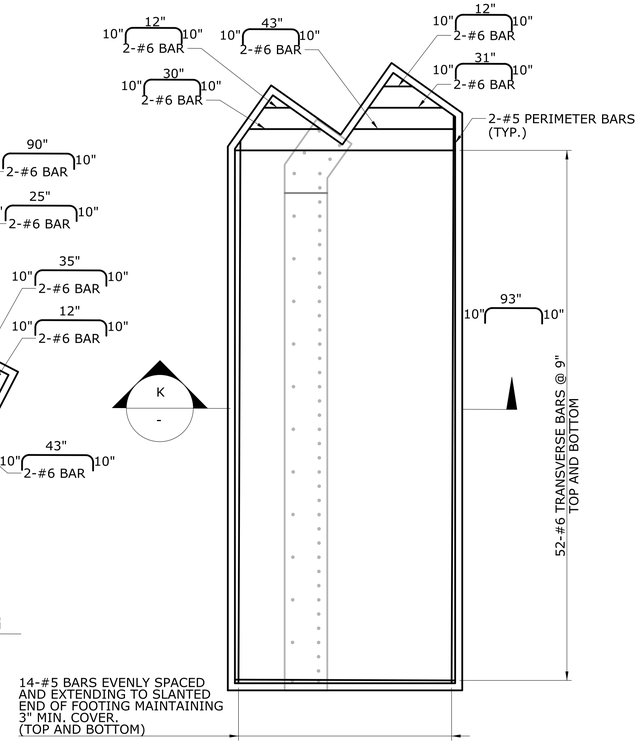

WEST WINGWALL: FOOTING REINFORCING

SCALE: ⅜" = 1'-0"

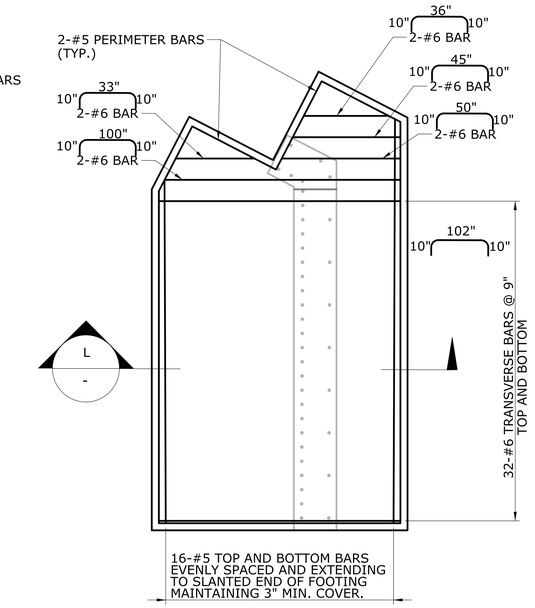

WEST WINGWALL: FOOTING REINFORCING

SCALE: ⅜" = 1'-0"

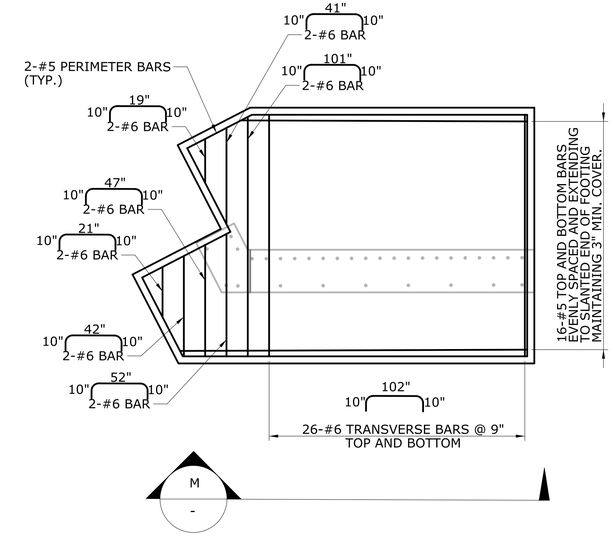

EAST WINGWALL: FOOTING REINFORCING

SCALE: ⅜" = 1'-0"

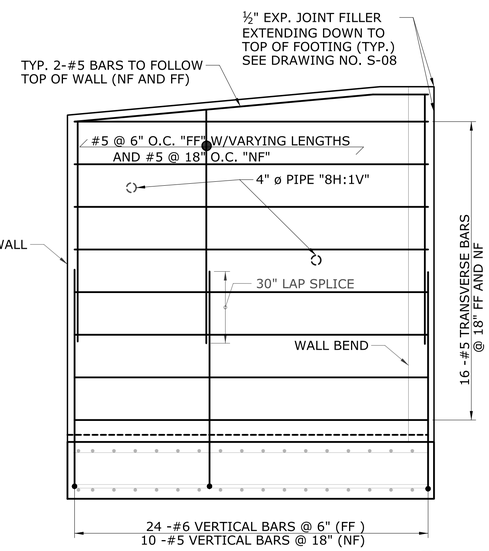

FF REINF. WINGWALL SECTION

SCALE: ⅜" = 1'-0

J
-

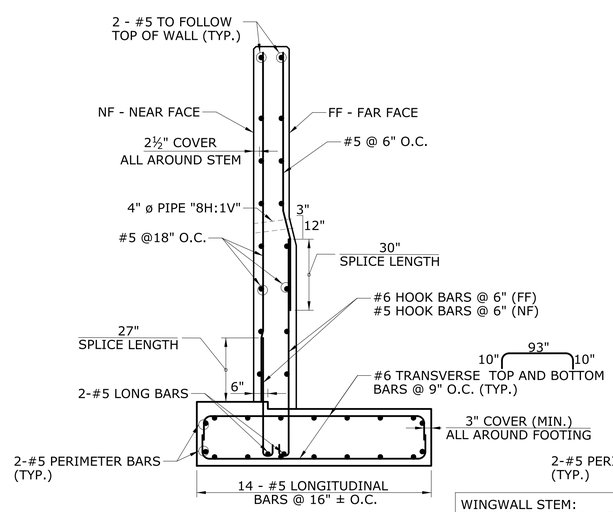

SECTION

SCALE: ⅜" = 1'-0

K
-

WINGWALL STEM:
SHALL BE PAID FOR UNDER THE ITEM "ABUTMENT AND WALL CONCRETE"

WINGWALL FOOTING:
SHALL BE PAID FOR UNDER THE ITEM "FOOTING CONCRETE"

REINFORCING:
SHALL BE PAID FOR UNDER THE ITEM "DEFORMED STEEL BARS -GALVANIZED"

INLET REINFORCING DETAIL

SCALE: AS SHOWN

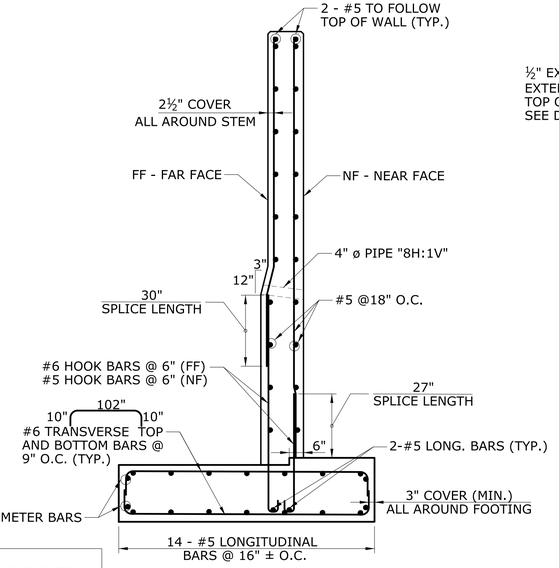

SECTION

SCALE: ⅜" = 1'-0

L
-

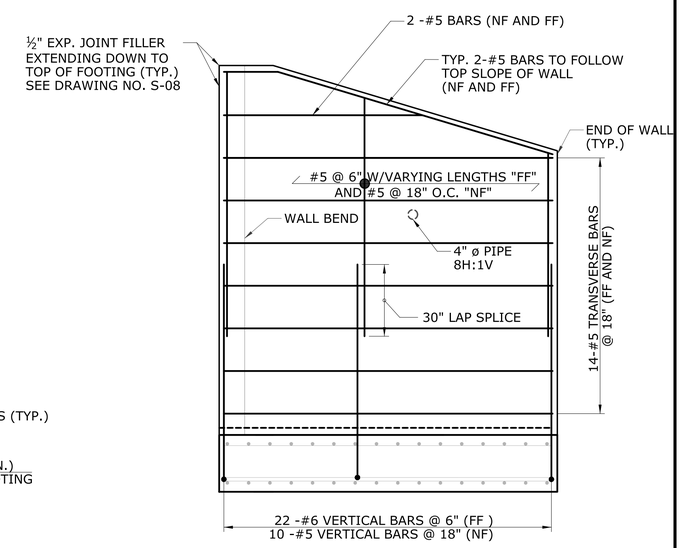

FF REINF. WINGWALL SECTION

SCALE: ⅜" = 1'-0

M
-

OUTLET REINFORCING DETAIL

SCALE: AS SHOWN

DESIGNER/DRAFTER: RDH
CHECKED BY: NJM
Plotted Date: 7/25/2019
Filename: pw:\\ctdot.projectwiseonline.com:CTDOT\Documents\01.0 - Projects - Active\0134-0147\330_Design_Data\Structure_Bridge\SB_134_147_CULVERT 2_PLN__BDG_SHEET_0134-0147.dgn

REV.	DATE	REVISION DESCRIPTION
-	-	-
-	-	-
-	-	-
-	-	-
-	-	-

SCALE AS NOTED

SIGNATURE/ BLOCK:

OFFICE OF ENGINEERING
2800 BERLIN TURNPIKE
NEWINGTON, CT 06111

APPROVED BY:

STATE OF CONNECTICUT
DEPARTMENT OF TRANSPORTATION

MODERN ROUNDABOUT
AT ROUTE 190 AND ROUTE 319

TOWN OF STAFFORD

PROJECT NO. 0134-0147

DRAWING TITLE: CULVERT 2 REINFORCING - WINGWALLS AND FOOTINGS

DRAWING NO. S-11

SHEET NO. 04.11

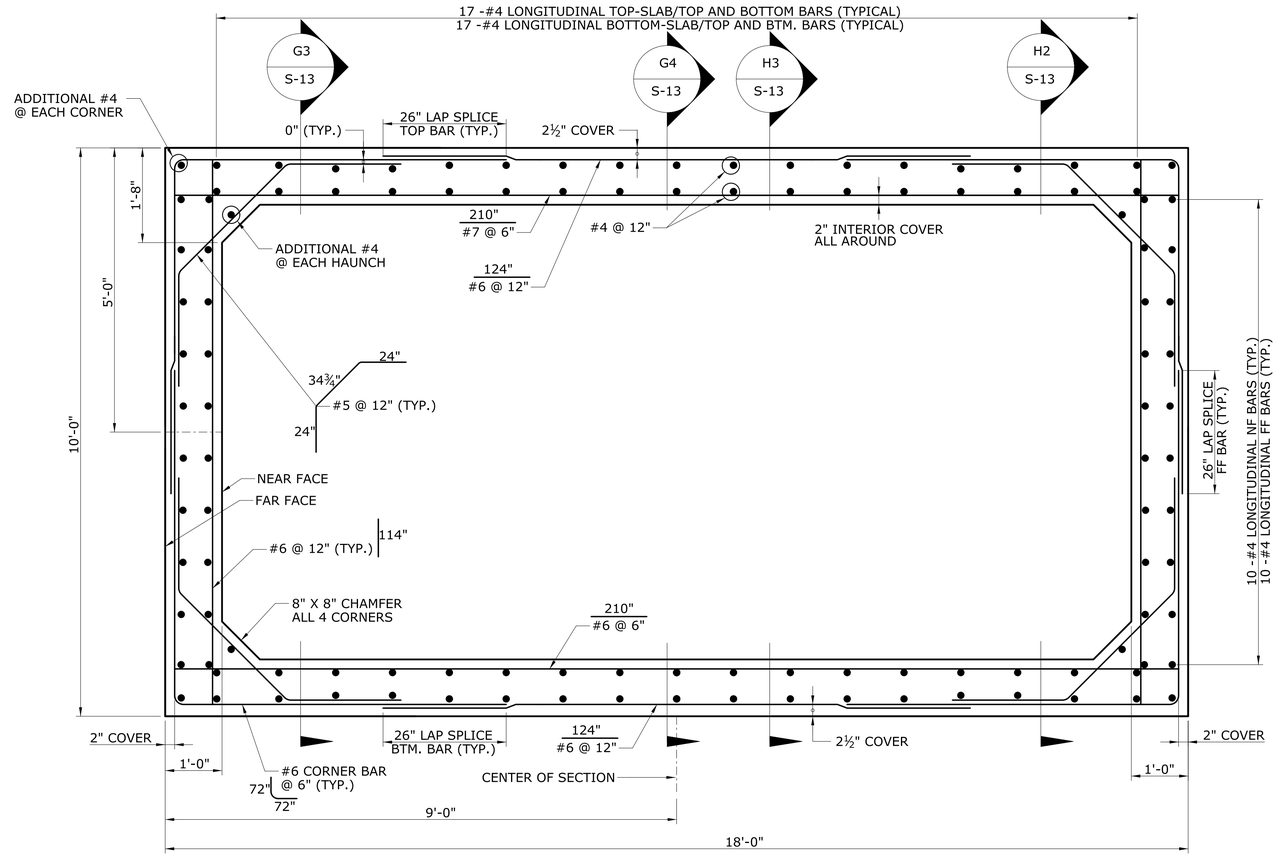

TYPICAL BOX CULVERT REINFORCING -SECTION

G1 / S-05

SCALE: ¾" = 1'-0"

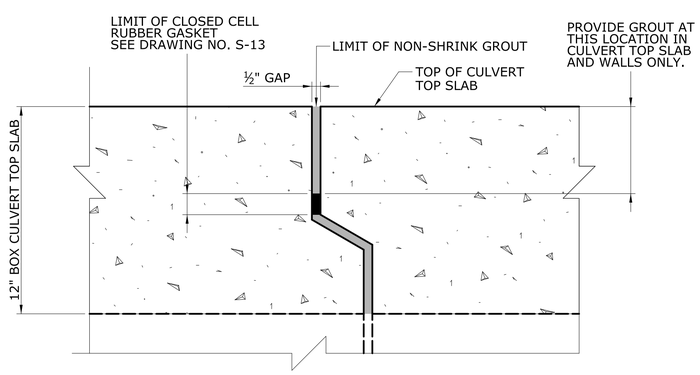

TOP SLAB AND CULVERT WALLS

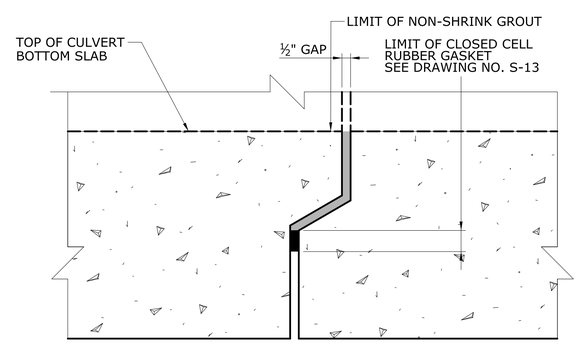

BOTTOM SLAB AND CULVERT WALLS

TYPICAL LAP JOINT DETAIL - BOX CULVERT

N.T.S.

PRECAST BOX CULVERT REINFORCING NOTES:

1. ALL REINFORCEMENT STEEL IN CONCRETE BOX CULVERTS AND HEADWALLS SHALL BE ASTM A615, GRADE 60 AND SHALL BE GALVANIZED IN ACCORDANCE WITH ASTM A767, CLASS 1.
2. AT AREAS WHERE EXACT REBAR SPACING SHOWN ON THE PLANS CANNOT BE ACHIEVED , REBARS SHALL BE PLACED EVENLY AND SHALL NOT EXCEED MAXIMUM REBAR SPACING SHOWN ON THE PLANS, UNLESS OTHERWISE INDICATED.
3. THE COST OF REINFORCEMENT WITHIN THE PRECAST BOX CULVERT UNITS SHALL BE PAID FOR UNDER THE ITEM "16' X 8' PRECAST CONCRETE BOX CULVERT."
4. THE SPLICE LENGTH FOR THE REINFORCEMENT SHALL BE AS FOLLOWS UNLESS DIMENSIONED OTHERWISE:

BAR SIZE	SPLICE LENGTH
#5	22"
#6	26"
#7	30"

PRECAST BOX CULVERT CONCRETE NOTES:

1. ALL PRECAST CONCRETE BOX CULVERT UNITS SHALL CONFORM TO MIX CLASSIFICATION PCC05562: F'c = 5000 PSI.
2. CONSTRUCTION JOINTS, OTHER THAN THE THOSE SHOWN ON THE PLANS, WILL NOT BE PERMITTED WITHOUT THE PRIOR APPROVAL OF THE ENGINEER.
3. THE COST OF THE PRECAST CONCRTE BOX CULVERT SHALL BE PAID FOR UNDER THE ITEM "16' X 8' PRECAST CONCRETE BOX CULVERT."

DESIGNER/DRAFTER: RDH
CHECKED BY: NM
Plotted Date: 7/25/2019
Filename: pw:\\ctdot.projectwiseonline.com:CTDOT\Documents\01.0 - Projects - Active\0134-0147\330_Design_Data\Structure_Bridge\SB_134_147_CULVERT 2_PLN__BDG_SHEET_0134-0147.dgn

REV.	DATE	REVISION DESCRIPTION
-	-	-

SCALE AS NOTED

SIGNATURE/BLOCK:

OFFICE OF ENGINEERING
2800 BERLIN TURNPIKE
NEWINGTON, CT 06111

APPROVED BY:

STATE OF CONNECTICUT
DEPARTMENT OF TRANSPORTATION

MODERN ROUNDABOUT
AT ROUTE 190 AND ROUTE 319

TOWN OF STAFFORD

PROJECT NO. 0134-0147

DRAWING TITLE: BOX CULVERT REINFORCING DETAILS - 1

DRAWING NO. S-12

SHEET NO. 04.12

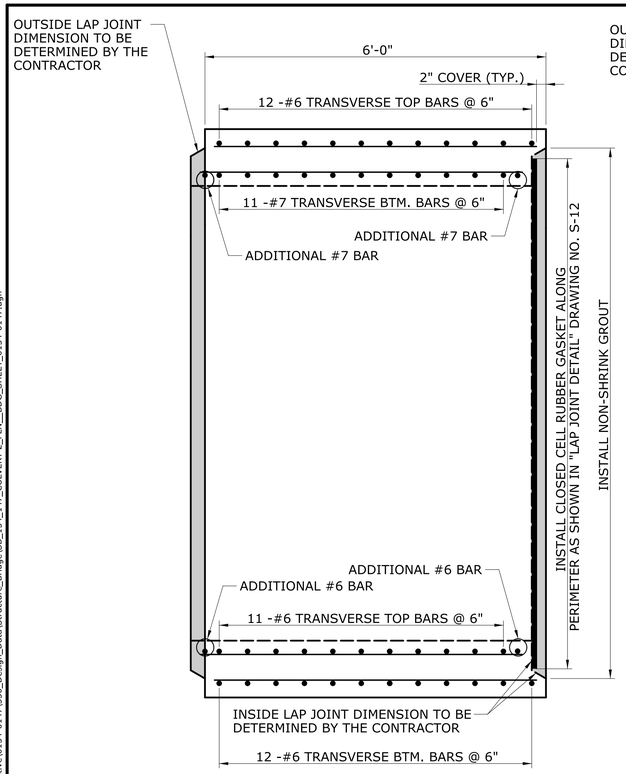

SECTION G3 / S-12
SCALE: ¾" = 1'-0"

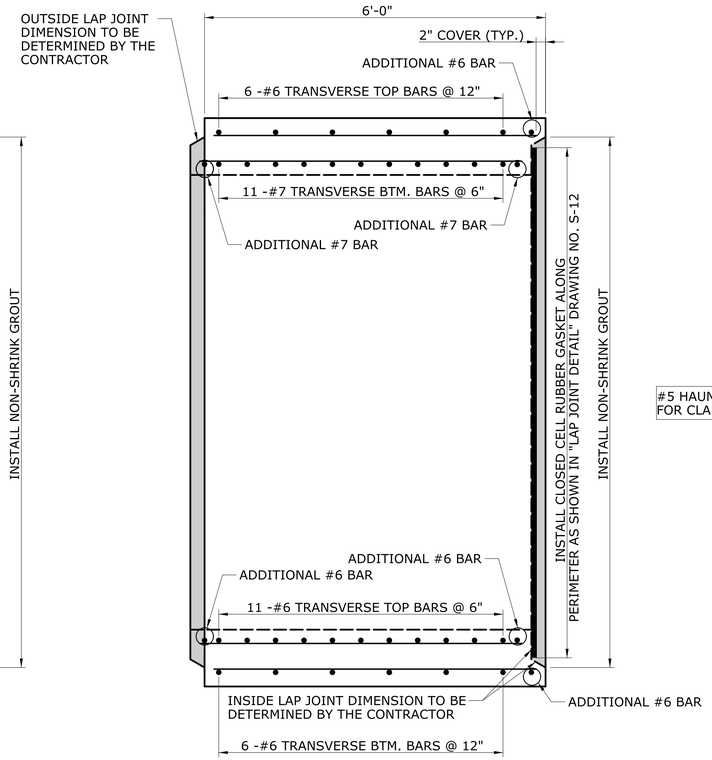

SECTION G4 / S-12
SCALE: ¾" = 1'-0"

#5 HAUNCH BARS NOT SHOWN FOR CLARITY OF MAIN BARS.

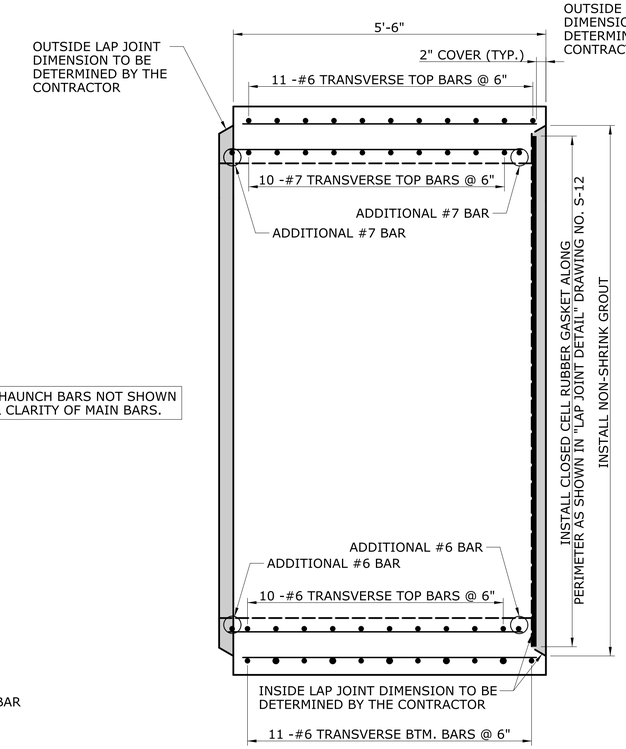

SECTION H2 / S-12
SCALE: ¾" = 1'-0"

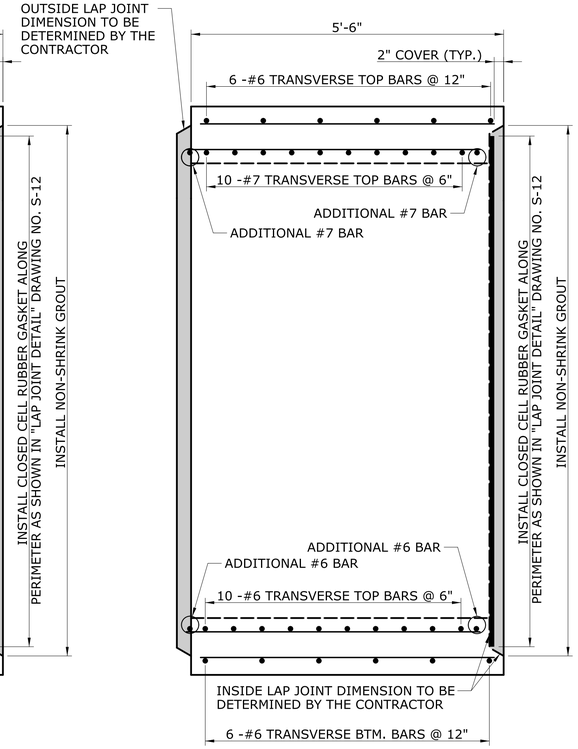

SECTION H3 / S-12
SCALE: ¾" = 1'-0"

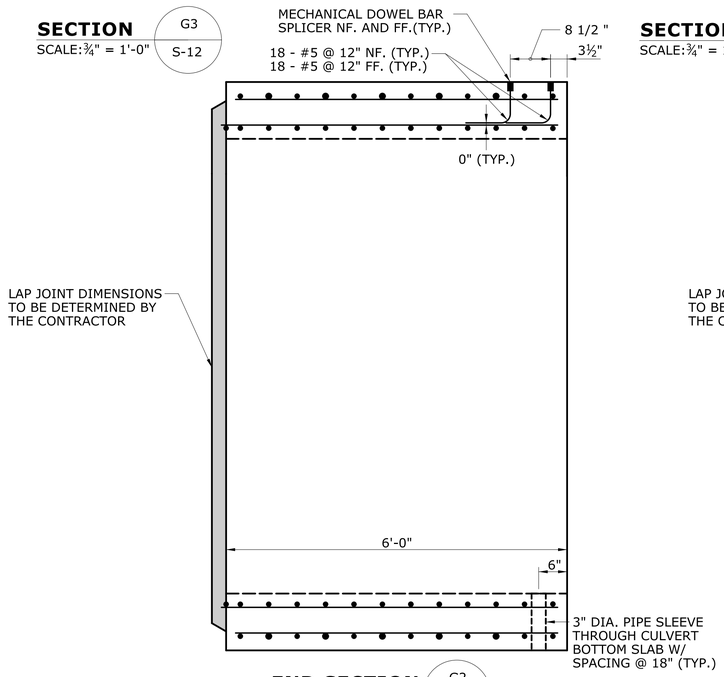

END SECTION G2 / S-5
SCALE: ¾" = 1'-0"

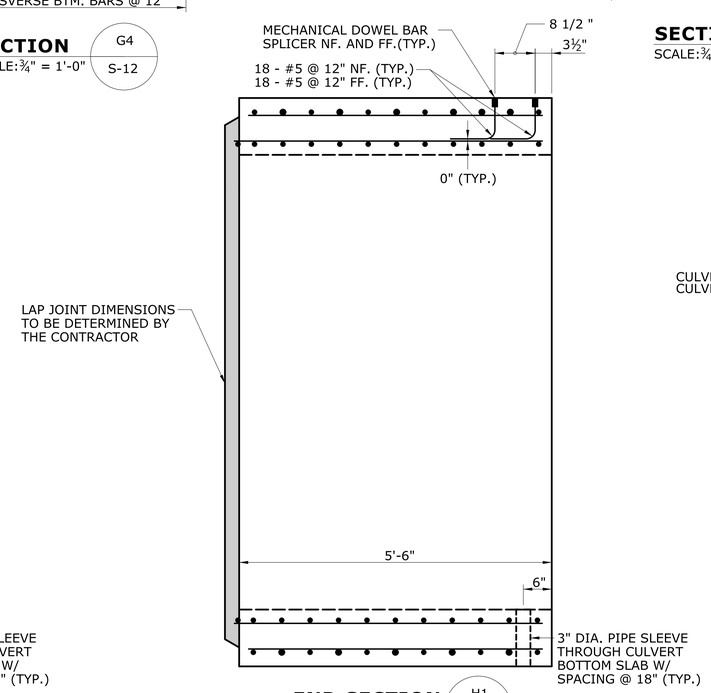

END SECTION H1 / S-6
SCALE: ¾" = 1'-0"

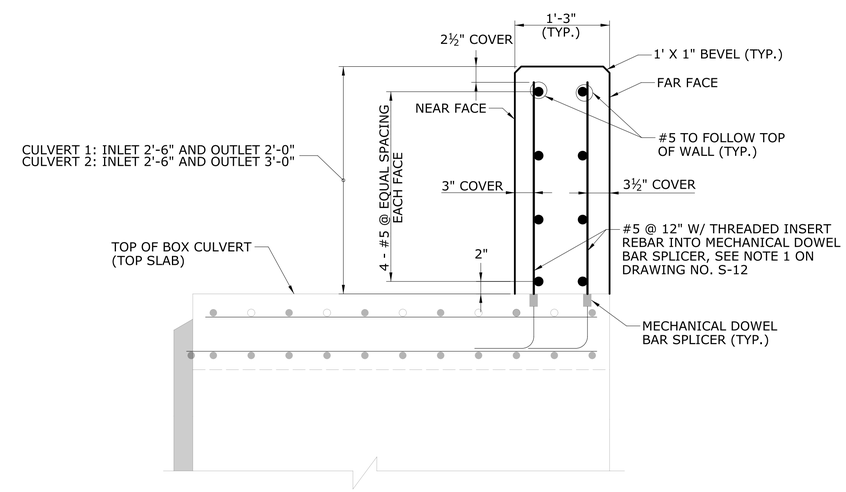

SECTION - TYPICAL HEADWALL REINFORCING
SCALE: 1" = 1'-0"

SEE REINFORCEMENT NOTES ON DRAWING NO. S-12

REV.	DATE	REVISION DESCRIPTION
-	-	-
-	-	-
-	-	-
-	-	-
-	-	-

DESIGNER/DRAFTER: RDH
CHECKED BY: NJM
Plotted Date: 7/25/2019
Filename: pw:\\ctdot.projectwiseonline.com:CTDOT\Documents\01.0 - Projects - Active\0134-0147\330_Design_Data\Structure_Bridge\SB_134_147_CULVERT 2_PLN__BDG_SHEET_0134-0147.dgn

SCALE AS NOTED

SIGNATURE/ BLOCK:

OFFICE OF ENGINEERING
2800 BERLIN TURNPIKE
NEWINGTON, CT 06111

APPROVED BY:

STATE OF CONNECTICUT
DEPARTMENT OF TRANSPORTATION

MODERN ROUNDABOUT
AT ROUTE 190 AND ROUTE 319

TOWN OF STAFFORD

PROJECT NO. 0134-0147
DRAWING TITLE: BOX CULVERT REINFORCING DETAILS - 2

DRAWING NO. S-13
SHEET NO. 04.13

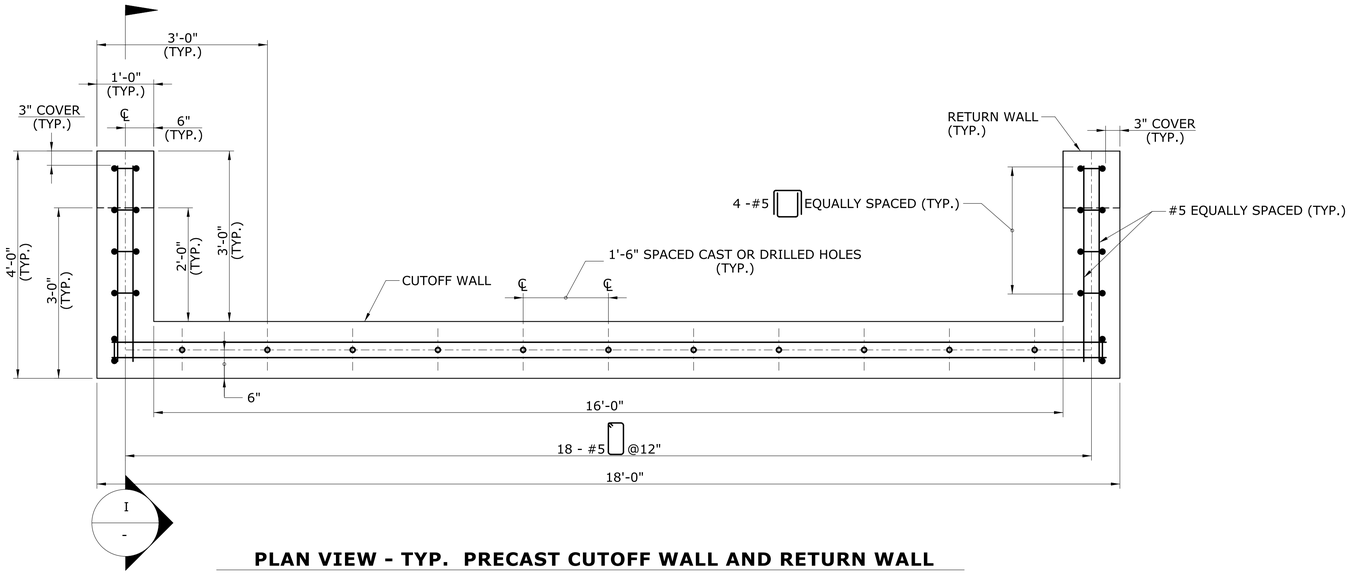

PLAN VIEW - TYP. PRECAST CUTOFF WALL AND RETURN WALL

SCALE: ¾" = 1'-0"

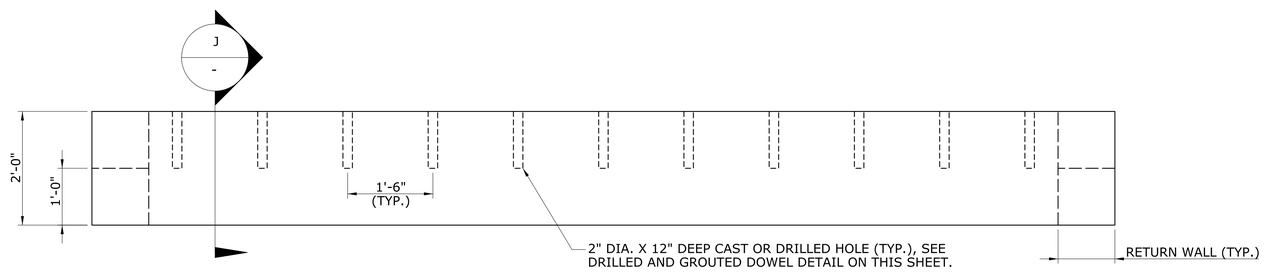

ELEVATION VIEW - TYP. PRECAST CUTOFF WALL AND RETURN WALL

SCALE: ¾" = 1'-0"

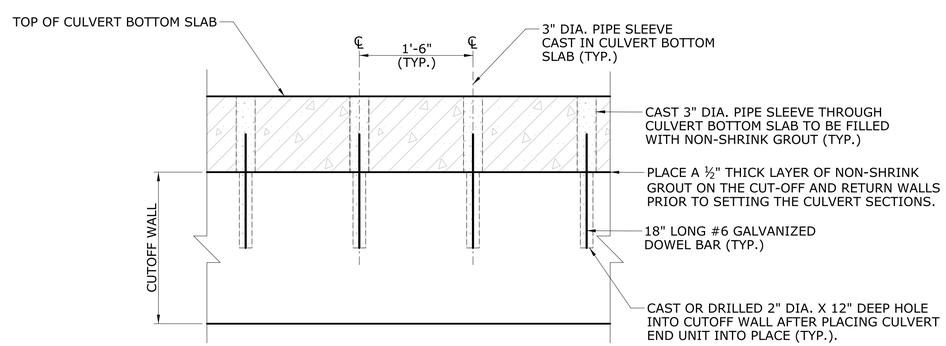

DRILLED AND GROUTED DOWEL DETAIL

SCALE: 1" = 1'-0"

NOTE:
MONOLITHIC PRECAST CONCRETE CUT-OFF WALL AND RETURN WALL SHALL BE PAID FOR UNDER THE ITEM "PRECAST CONCRETE CUT-OFF WALL".

DRILLED AND GROUTED DOWEL SHALL BE PAID FOR UNDER THE ITEM "16' X 8' PRECAST CONCRETE BOX CULVERT"

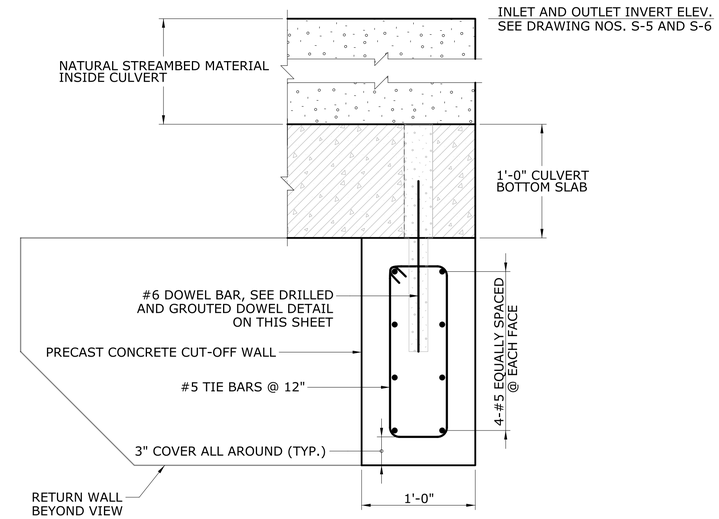

REINFORCING - SECTION

SCALE: 1½" = 1'-0"

J
-

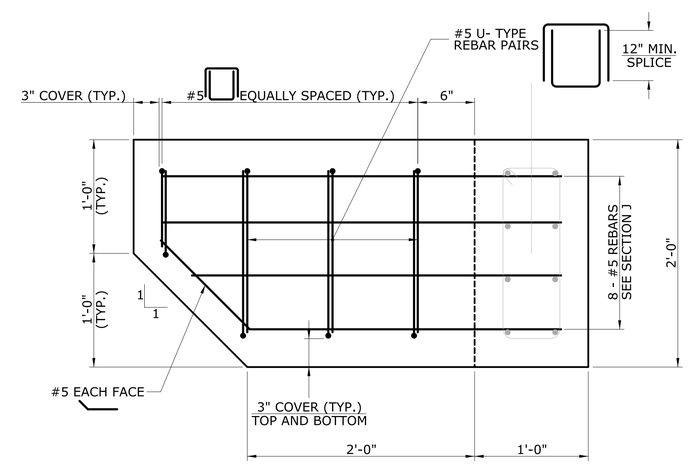

REINFORCING - SECTION

SCALE: 1½" = 1'-0"

I
-

DESIGNER/DRAFTER: RDH
CHECKED BY: NJM

Plotted Date: 8/7/2019
Filename: pw:\\ctdot.projectwiseonline.com:CTDOT\Documents\01.0 - Projects - Active\0134-0147\330_Design_Data\Structure_Bridge\SB_134_147_Culv1 Pln and Elev_BDG_SHEET_0134-0147.dgn

REV.	REVISION DESCRIPTION	DATE
-	-	-
-	-	-
-	-	-

SCALE AS NOTED

SIGNATURE/
BLOCK:

OFFICE OF ENGINEERING
2800 BERLIN TURNPIKE
NEWINGTON, CT 06111

APPROVED BY:

STATE OF CONNECTICUT
DEPARTMENT
OF
TRANSPORTATION

MODERN ROUNDABOUT
AT ROUTE 190 AND ROUTE 319

TOWN OF STAFFORD

PROJECT NO. 0134-0147

DRAWING TITLE: CUT-OFF WALL AND RETURN WALL DETAILS

DRAWING NO.
S-14

SHEET NO.
04.14

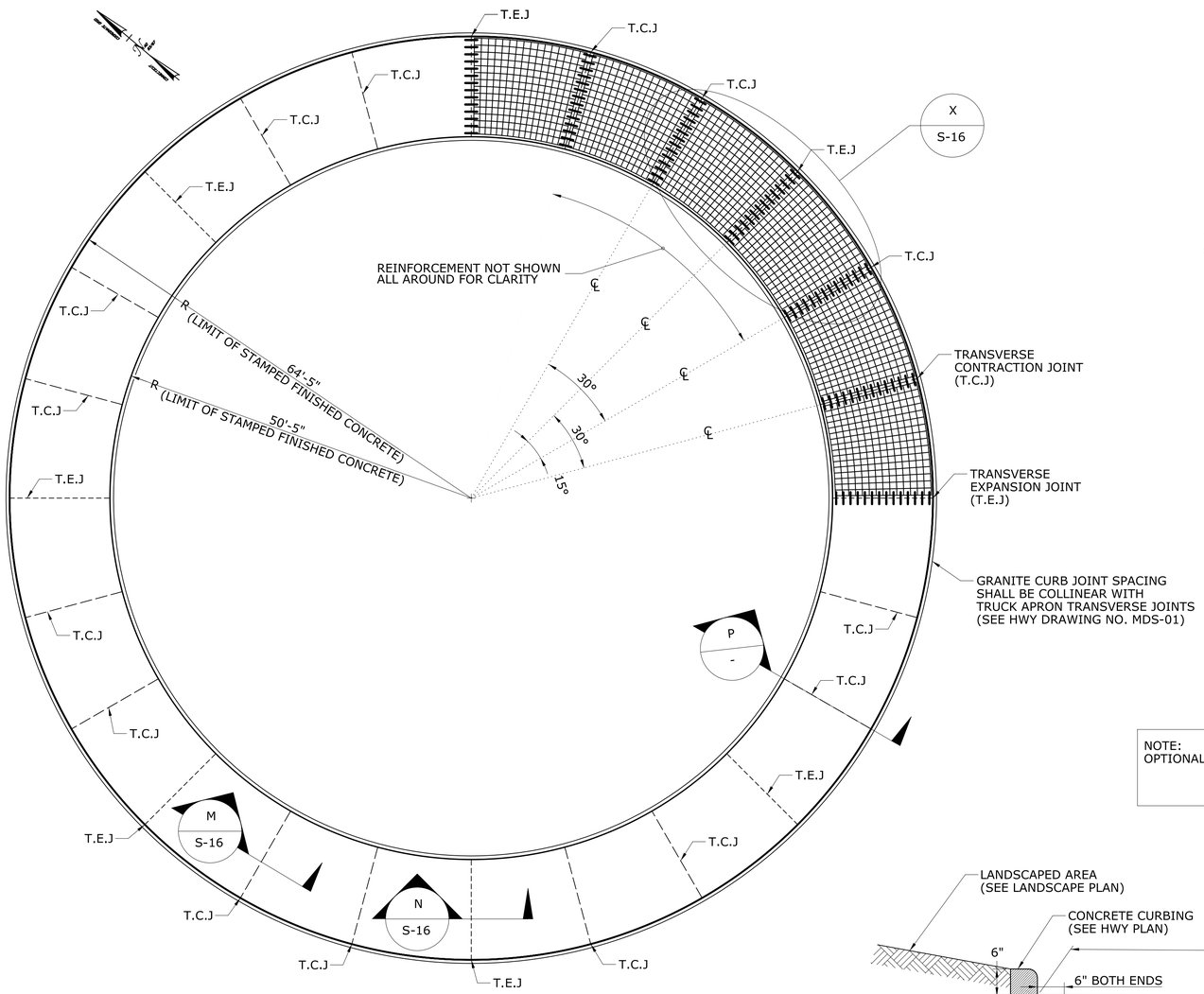

PLAN VIEW - TRUCK APRON

SCALE: 1" - 10'

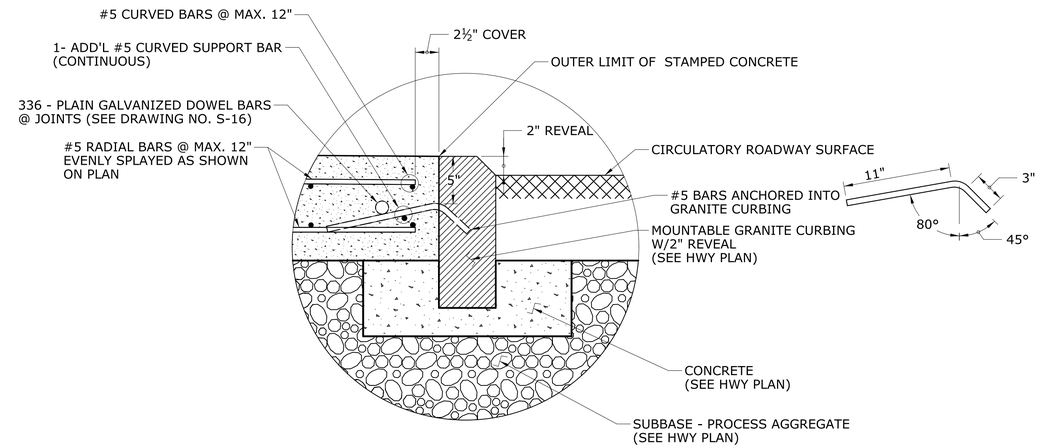

TRUCK APRON DETAIL

SCALE: 1½" = 1' - 0"

Y
-

NOTE:
OPTIONAL LAP SPLICE

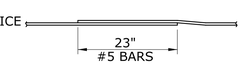

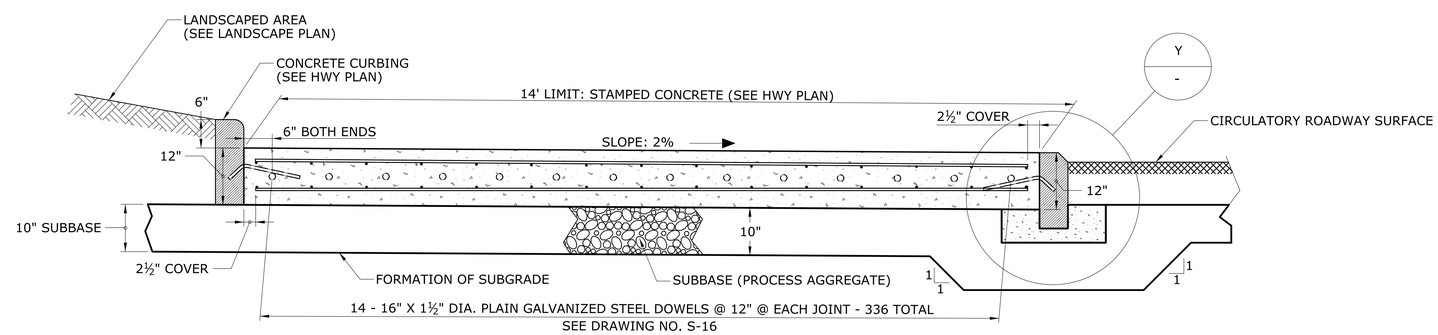

SECTION VIEW

SCALE: ¾" = 1' - 0"

P
-

DESIGNER/DRAFTER: RDH
CHECKED BY: NJM

Plotted Date: 7/25/2019
Filename: pw:\\ctdot.projectwiseonline.com:CTDOT\Documents\01.0 - Projects - Active\0134-0147\330_Design_Data\Structure_Bridge\SB_134_147_Culv1 Pln and Elev_BDG_SHEET_0134-0147.dgn

REV.	DATE	REVISION DESCRIPTION
-	-	-
-	-	-
-	-	-
-	-	-
-	-	-

SCALE AS NOTED

SIGNATURE/
BLOCK:

OFFICE OF ENGINEERING
2800 BERLIN TURNPIKE
NEWINGTON, CT 06111

APPROVED BY:

STATE OF CONNECTICUT
DEPARTMENT
OF
TRANSPORTATION

MODERN ROUNDABOUT
AT ROUTE 190 AND ROUTE 319

TOWN OF STAFFORD

PROJECT NO. 0134-0147

DRAWING TITLE: TRUCK APRON PLAN AND REINFORCING DETAILS

DRAWING NO. S-15

SHEET NO. 04.15

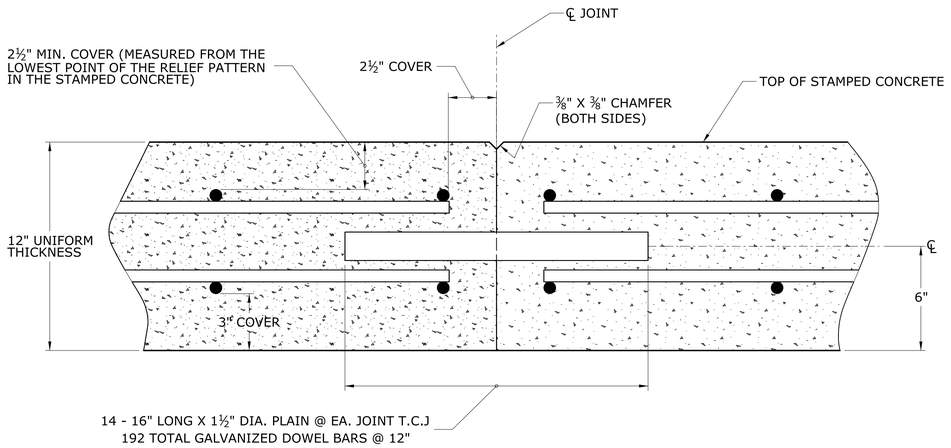

TRANSVERSE CONTRACTION JOINT — M / S-15

SCALE: 3" = 1' - 0"

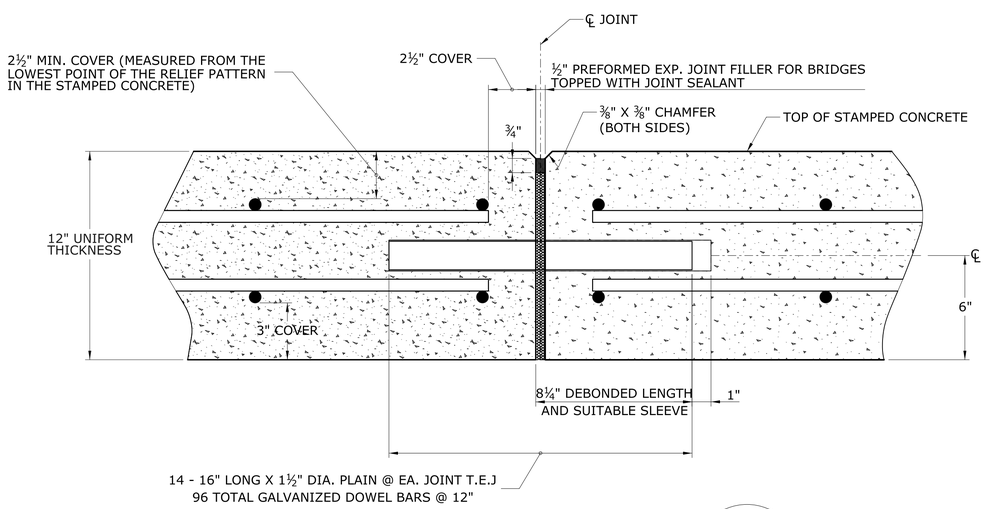

TRANSVERSE EXPANSION JOINT — N / S-15

SCALE: 3" = 1' - 0"

REINFORCING NOTES

1/ ALL REINFORCEMENT SHALL BE GALVANIZED. PAID FOR UNDER THE ITEM "DEFORMED STEEL BARS-GALVANIZED", UNLESS NOTED OTHERWISE.

2/ ALL DOWEL BARS SHALL BE GALVANIZED. PAID FOR UNDER THE ITEM "GALVANIZED-DOWEL", UNLESS NOTED OTHERWISE.

3/ THE CONTRACTOR SHALL MAINTAIN HORIZONTAL POSITION OF DOWELS DURING THE STAMPED CONCRETE POUR.

4/ LONGITUDINAL REINFORCINGS SHALL BE CURVED TO MATCH THE INNER AND OUTER CURVE ENDS OF THE TRUCK APRON.

NOTE:
OPTIONAL LAP SLICE

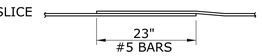

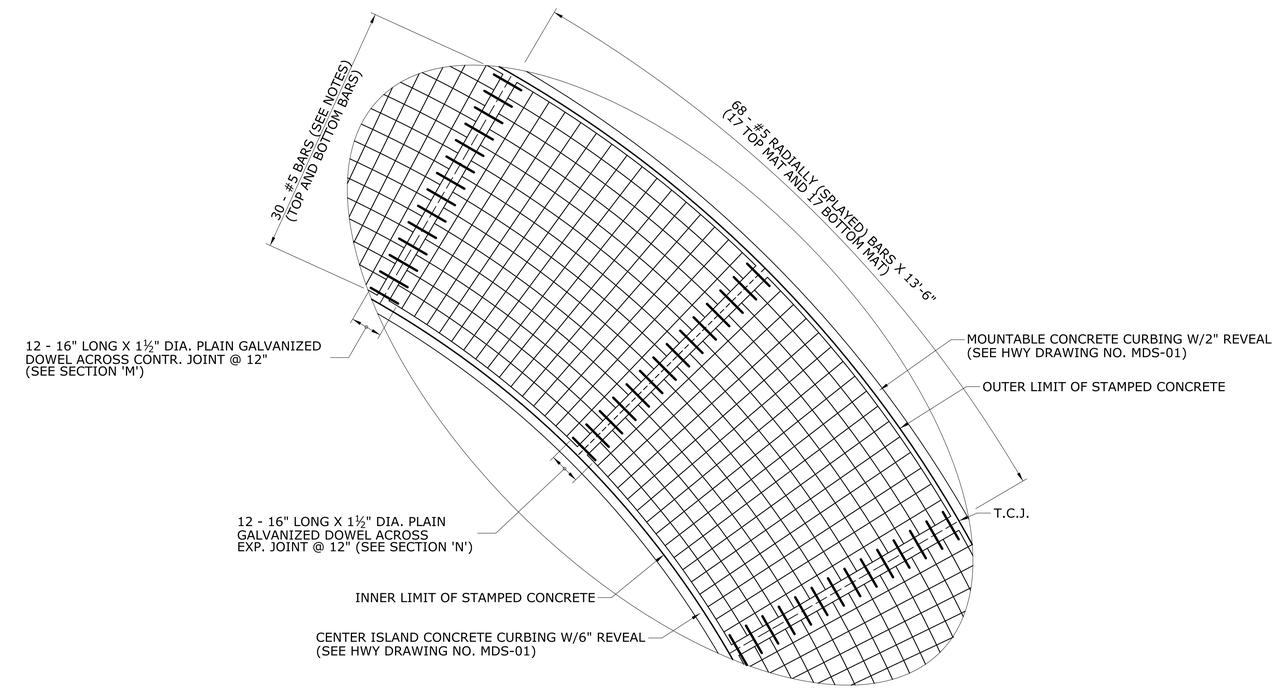

PLAN VIEW: REINFORCING DETAIL — X / S-15

SCALE: ¼" = 1' - 0"

DESIGNER/DRAFTER: RDH
CHECKED BY: NJM
Plotted Date: 8/7/2019
Filename: pw:\\cdot.projectwiseonline.com:CTDOT\Documents\01.0 - Projects - Active\0134-0147\330_Design_Data\Structure_Bridge\SB_134_147_Culv1 Pln and Elev_BDG_SHEET_0134-0147.dgn

REV.	DATE	REVISION DESCRIPTION
-	-	-

SCALE AS NOTED

SIGNATURE/ BLOCK:

OFFICE OF ENGINEERING
2800 BERLIN TURNPIKE
NEWINGTON, CT 06111

APPROVED BY:

STATE OF CONNECTICUT
DEPARTMENT OF TRANSPORTATION

MODERN ROUNDABOUT
AT ROUTE 190 AND ROUTE 319

TOWN OF STAFFORD

PROJECT NO. 0134-0147
DRAWING TITLE: TRUCK APRON JOINT DETAIL

DRAWING NO. S-16
SHEET NO. 04.16