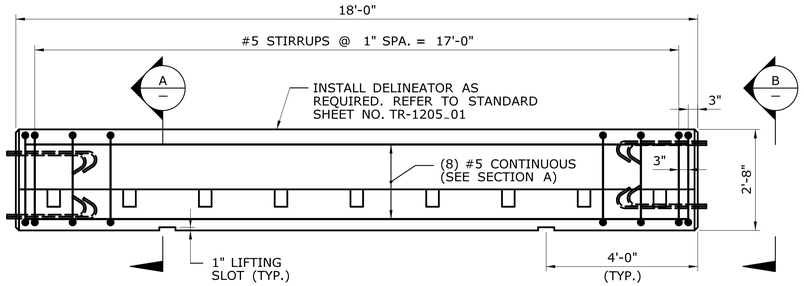

ELEVATION

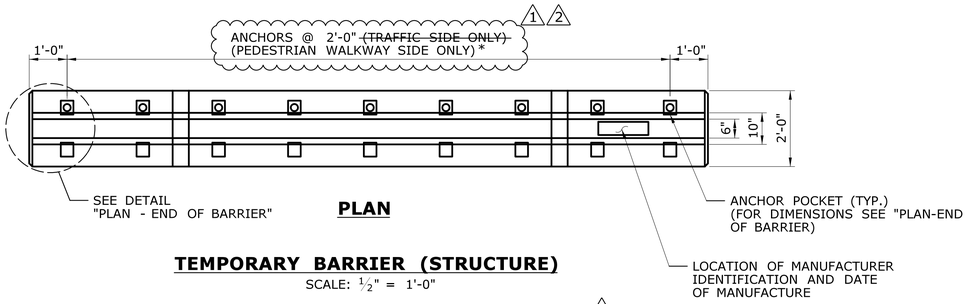

PLAN

TEMPORARY BARRIER (STRUCTURE)

SCALE: ½" = 1'-0"

2

* TPCBC SHALL ONLY BE ANCHORED TO BRIDGE DECK DURING STAGE 6 AS SHOWN ON STG-06.

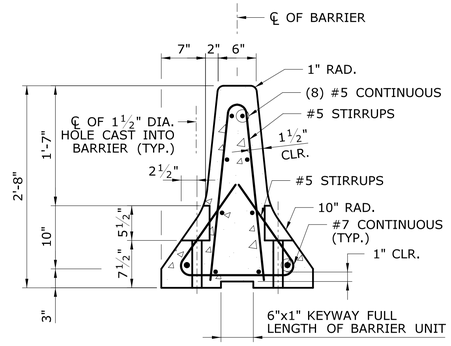

SECTION **A**

SCALE: 1"=1'-0"

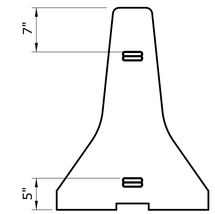

END VIEW **B**

SCALE: 1"=1'-0"

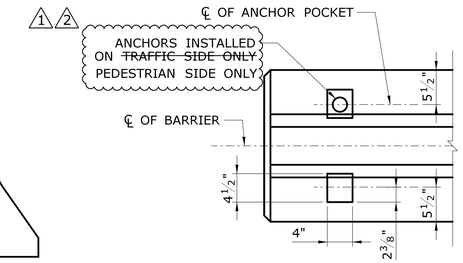

PLAN: END OF BARRIER

SCALE: 1" = 1'-0"

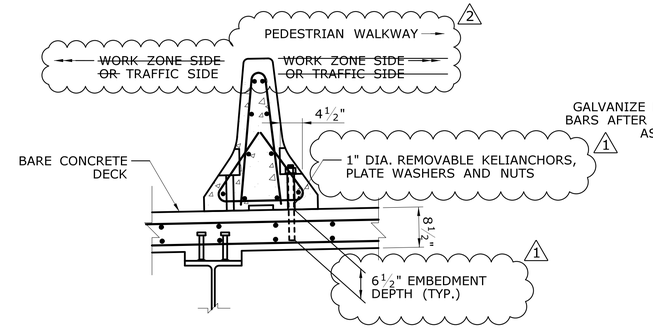

TEMPORARY ANCHORAGE DETAIL

SCALE: ¾" = 1'-0"

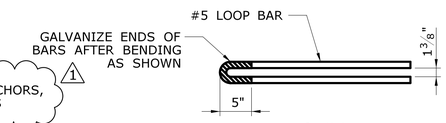

PLAN

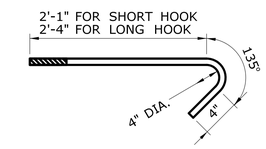

ELEVATION

LOOP BAR DETAILS

SCALE: 1" = 1'-0"

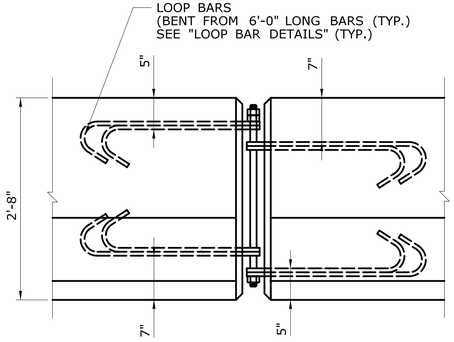

BARRIER CONNECTION DETAILS

SCALE: 1" = 1'-0"

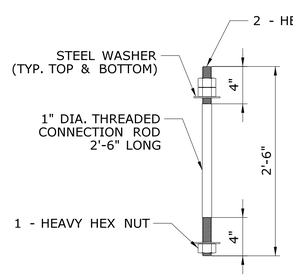

CONNECTION ROD DETAILS

SCALE: 1" = 1'-0"

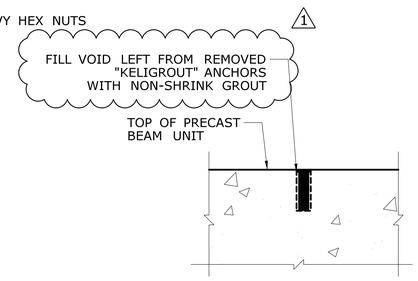

FILLING OF ANCHOR HOLES

SCALE: 1" = 1'-0"

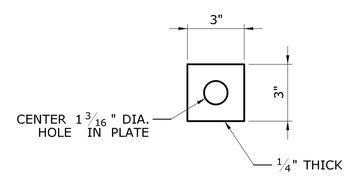

PLATE WASHER

SCALE: 3" = 1'-0"

NOTES: 1

1. REMOVABLE "KELIANCHORS" (OR APPROVED EQUAL) SHALL BE USED FOR SECURING THE TEMPORARY BARRIER (STRUCTURE) TO THE PRECAST BRIDGE UNITS. THE ANCHORS SHALL BE GROUTED IN PLACE EITHER DURING PBU FABRICATION OR IN THE FIELD. FIELD DRILLING OF ANCHOR HOLES WILL NOT BE ALLOWED. ALL REMOVEABLE "KELIANCHORS" SHALL BE REMOVED FOLLOWING STAGE 6 (SEE CONSTRUCTION STAGING SUBSET)AND FILLED WITH NON-SHRINK GROUT AS SHOWN ON THE DETAIL ON THIS SHEET. PLACEMENT OF ANCHORS SHALL BE AS REQUIRED TO ACCOMMODATE THE STAGED CONSTRUCTION. SEE SPECIAL PROVISIONS FOR MORE INFORMATION.
2. THREADED INSERTS SHALL BE PAID FOR UNDER THE ITEM "PRECAST CONCRETE/STEEL COMPOSITE SUPERSTRUCTURE". ALL OTHER WORK ON THIS SHEET SHALL BE PAID FOR UNDER THE ITEM "TEMPORARY PRECAST CONCRETE BARRIER CURB (STRUCTURE)".
3. IF TEMPORARY PRECAST BARRIER CURB IS HIT DURING CONSTRUCTION, CONTRACTOR SHALL NOTIFY THE DESIGN ENGINEER.

DESIGNED BY: HARDESTY & HANOVER, LLC NEW HAVEN, CT

STATE OF CONNECTICUT · STEVEN D. HARLACKER · No. 22034 · LICENSED PROFESSIONAL ENGINEER

Steven D Harlacker
2020.01.23
16:49:10-05'00'

ADDENDUM NO. 3

REV.	DATE	REVISION DESCRIPTION	SHEET NO.
-	-	-	-
-	-	-	-
-	-	-	-
-	-	-	-
2	1/17/20	REVISED ANCHORING CALL-OUT	04.08.A3
1	12/3/19	REVISED ANCHORING SYSTEM	04.08.A2

THE INFORMATION, INCLUDING ESTIMATED QUANTITIES OF WORK, SHOWN ON THESE SHEETS IS BASED ON LIMITED INVESTIGATIONS BY THE STATE AND IS IN NO WAY WARRANTED TO INDICATE THE CONDITIONS OF ACTUAL QUANTITIES OF WORK WHICH WILL BE REQUIRED.

Plotted Date: 1/17/2020

DESIGNER/DRAFTER: **SS**

CHECKED BY: **BSH**

SCALE AS NOTED

STATE OF CONNECTICUT
DEPARTMENT OF TRANSPORTATION

Filename: ...\SB_MSH_BR03903_058_336_FD_Construction_Staging_7_Temp Barrier.dgn

SIGNATURE/BLOCK:

STATE OF CONNECTICUT · STEVEN D. HARLACKER · No. 22034 · LICENSED PROFESSIONAL ENGINEER

Hardesty & Hanover, LLC
59 Elm Street
New Haven, CT 06510
Hardesty & Hanover

PROJECT TITLE:

REHABILITATION OF BRIDGE NO. 03903 MOSHER AVE. OVER AMTRAK RAILROAD

TOWN: **GROTON**

DRAWING TITLE: **TEMPORARY BARRIER DETAILS**

PROJECT NO. **58-336**

DRAWING NO. **STG-08**

SHEET NO. **04.08.A3**