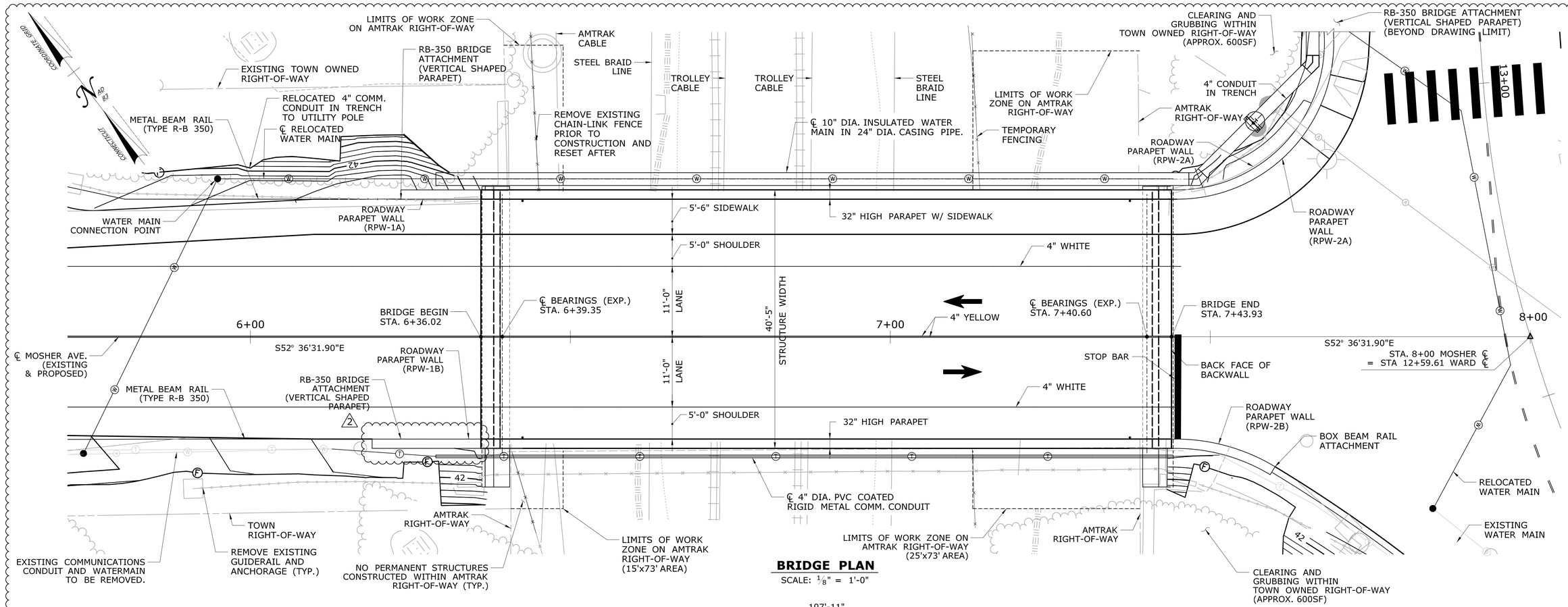

BRIDGE PLAN

SCALE: 1/8" = 1'-0"

DESIGNED BY:
HARDESTY & HANOVER, LLC
NEW HAVEN, CT

Steven D Harlacker
2020.01.23
16:50:10-05'00'

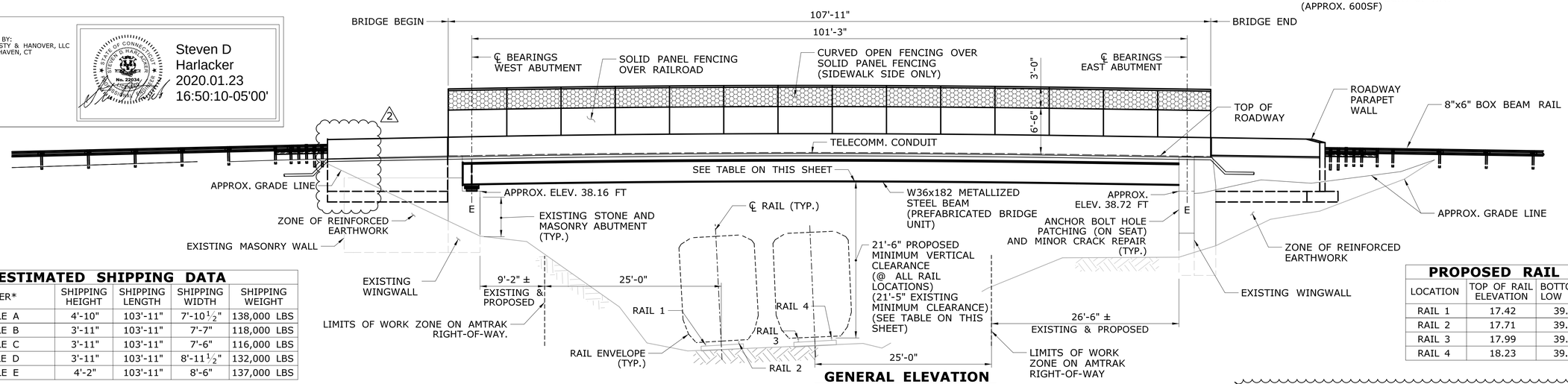

GENERAL ELEVATION

SCALE: 1/8" = 1'-0"
(LOOKING NORTH)

ESTIMATED SHIPPING DATA

MEMBER*	SHIPPING HEIGHT	SHIPPING LENGTH	SHIPPING WIDTH	SHIPPING WEIGHT
MODULE A	4'-10"	103'-11"	7'-10 1/2"	138,000 LBS
MODULE B	3'-11"	103'-11"	7'-7"	118,000 LBS
MODULE C	3'-11"	103'-11"	7'-6"	116,000 LBS
MODULE D	3'-11"	103'-11"	8'-11 1/2"	132,000 LBS
MODULE E	4'-2"	103'-11"	8'-6"	137,000 LBS

* SEE DWG. NO S-22 FOR PBU MODULE NUMBERS

PROPOSED RAIL CLEARANCE

LOCATION	TOP OF RAIL ELEVATION	BOTTOM OF LOW STEEL	PROPOSED CLEARANCE
RAIL 1	17.42	39.89	22.47
RAIL 2	17.71	39.91	22.20
RAIL 3	17.99	39.92	21.93
RAIL 4	18.23	39.91	21.68

ADDENDUM NO. 3

REV.	DATE	REVISION DESCRIPTION	SHEET NO.
-	-	-	-
-	-	-	-
-	-	-	-
-	-	-	-
2	1/17/20	ROADWAY PARAPET WALL EXTENDED	05.02.A3
1	12/3/19	CONTOURS ADDED, REVISED CLEARANCE NOTE, EDITS FOR TVC LINE CHANGE.	05.02.A2

THE INFORMATION, INCLUDING ESTIMATED QUANTITIES OF WORK, SHOWN ON THESE SHEETS IS BASED ON LIMITED INVESTIGATIONS BY THE STATE AND IS IN NO WAY WARRANTED TO INDICATE THE CONDITIONS OF ACTUAL QUANTITIES OF WORK WHICH WILL BE REQUIRED.

Plotted Date: 1/17/2020

DESIGNER/DRAFTER: SS
CHECKED BY: BSH
SCALE IN FEET 0 40 80
SCALE 1"=40'

STATE OF CONNECTICUT
DEPARTMENT OF TRANSPORTATION

Filename: ...\SB_MSH_BR03903_058_336_FD_GPE.dgn

SIGNATURE/BLOCK:
Hardesty & Hanover, LLC
59 Elm Street
New Haven, CT 06510

PROJECT TITLE:
REHABILITATION OF BRIDGE NO. 03903 MOSHER AVE. OVER AMTRAK RAILROAD

TOWN: **GROTON**

DRAWING TITLE: **GENERAL PLAN & ELEVATION**

PROJECT NO. **58-336**
DRAWING NO. **S-02**
SHEET NO. **05.02.A3**

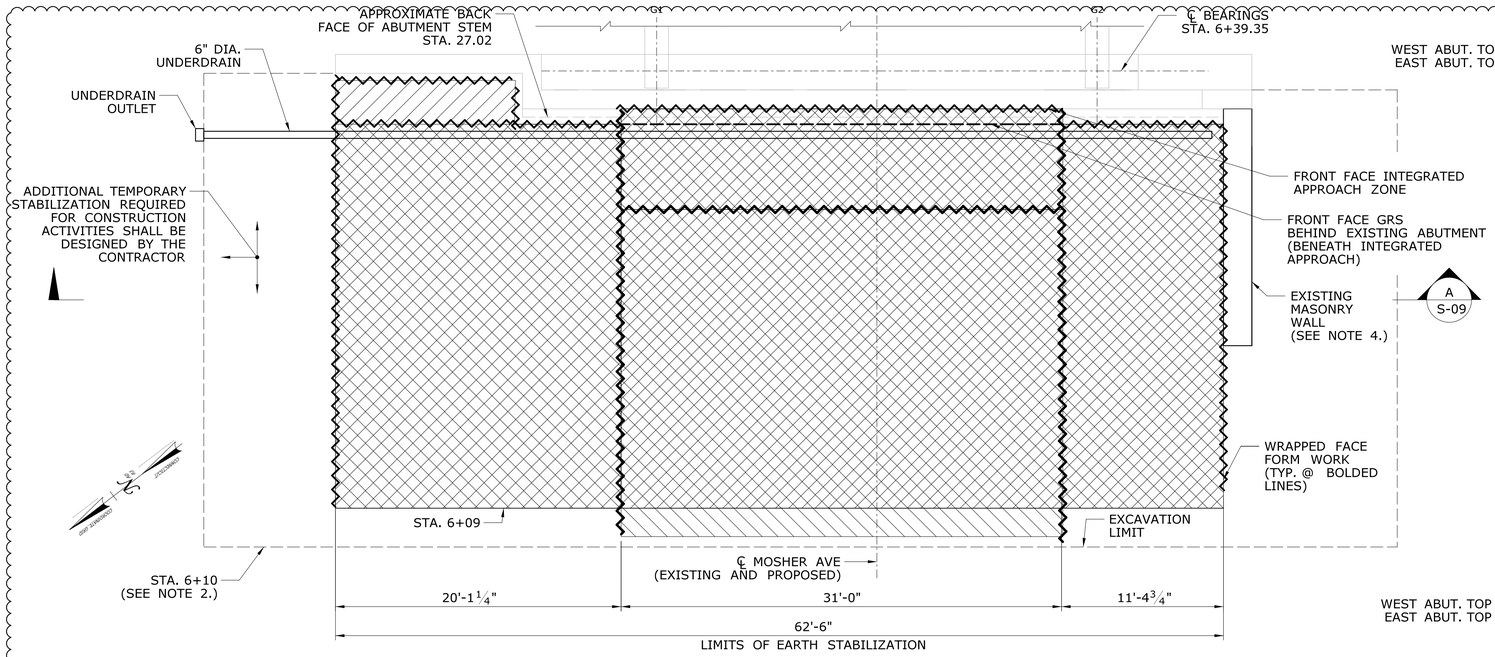

PLAN: WEST ABUTMENT - ADVANCED STAGE 2

SCALE: 3/16" = 1'-0"

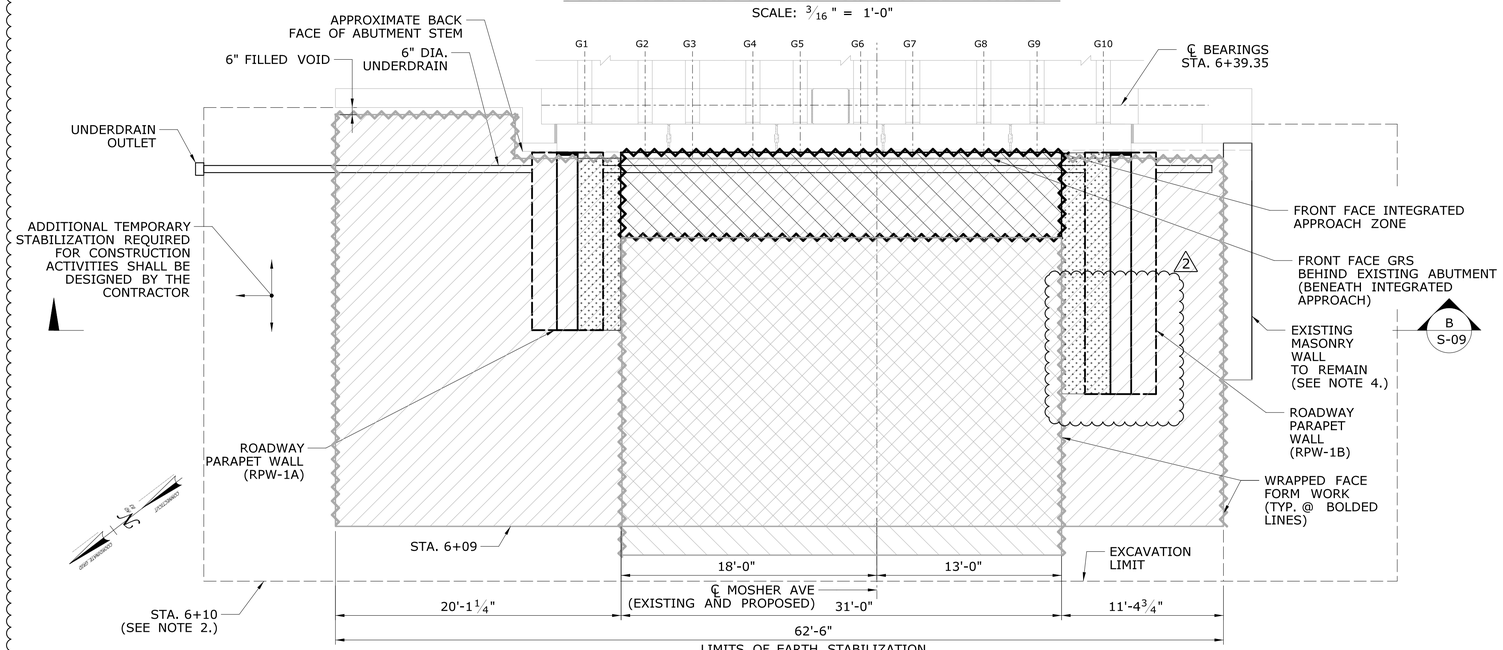

PLAN: WEST ABUTMENT - STAGE 6

SCALE: 3/16" = 1'-0"

1

WEST ABUT. TOP OF CROWN EL. 43.40 @ B.F. BACKWALL
EAST ABUT. TOP OF CROWN EL. 43.30 @ B.F. BACKWALL

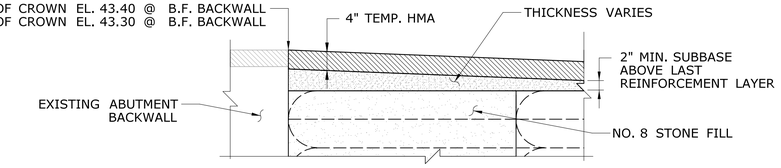

PROPOSED TEMPORARY PAVEMENT AT INTEGRATED APPROACH (ADVANCED STAGE 2)

SCALE: N.T.S.

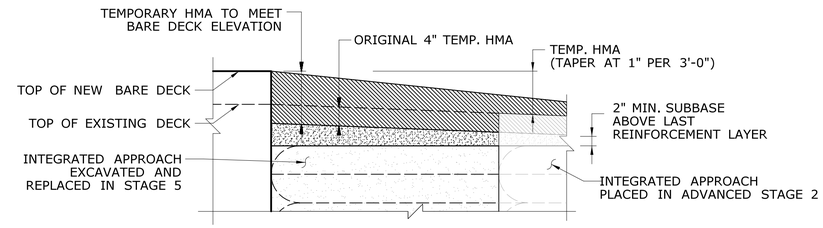

PROPOSED TEMPORARY PAVEMENT AT INTEGRATED APPROACH (STAGE 5)

SCALE: N.T.S.

WEST ABUT. TOP OF CROWN EL. 43.98 @ B.F. BACKWALL
EAST ABUT. TOP OF CROWN EL. 43.91 @ B.F. BACKWALL

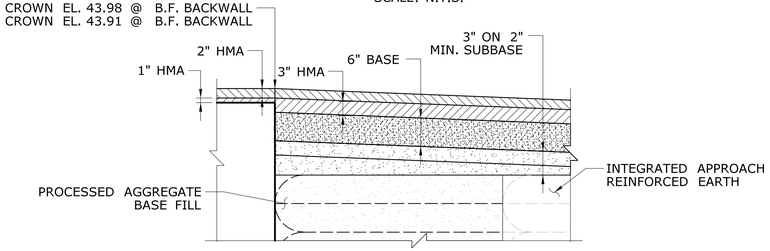

PROPOSED FINAL PAVEMENT AT INTEGRATED APPROACH (STAGE 8)

SCALE: N.T.S.

LEGEND:

- LOWER LEVEL GRS EARTH STABILIZATION
- UPPER LEVEL GRS EARTH STABILIZATION
- UPPER LEVEL GRS EARTH STABILIZATION ON TOP OF LOWER LEVEL GRS EARTH STABILIATION
- TOP LEVEL PERVIOUS STRUCTURE FILL
- WRAPPED FACE FORMWORK

NOTE:

GRAYSCALE LINES DENOTE WORK PERFORMED IN A PREVIOUS STAGE.

BLACK LINES DENOTE WORK PERFORMED IN CURRENT STAGE

NOTES:

1. SEE DWG. NO. S-08-1 FOR ADDITIONAL NOTES.
2. EXCAVATION LIMITS BASED ON DETAILS SHOWN ON DWG. NO. S-09. LIMITS SHALL NOT EXCEED STA. 6+10.00. PROVIDE SUPPORT OF EXCAVATION IF NECESSARY TO MAINTAIN LIMIT.
3. TOP OF INTEGRATED APPROACH ZONE IS BASED ON EXISTING, TEMPORARY AND PERMANENT ROADWAY ELEVATIONS AT END OF BRIDGE AND BACK OF STABILIZED REGION. THE CONTRACTOR SHALL SURVEY CRITICAL POINTS AT EACH STAGE TO ENSURE MINIMUM PAVEMENT STRUCTURE THICKNESSES ARE MAINTAINED AS SHOWN IN THE DETAILS ON THIS SHEET.
4. CONTRACTOR SHALL BE RESPONSIBLE FOR MAINTAINING WALL STABILITY DURING CONSTRUCTION ACTIVITIES.

ADDENDUM NO. 3

REV.	DATE	REVISION DESCRIPTION	SHEET NO.
-	-	-	-
-	-	-	-
-	-	-	-
-	-	-	-
2	1/17/20	ROADWAY PARAPET WALL EXTENDED	05.08.A3
1	12/3/19	REVISIONS TO GRS ABUTMENT STABILIZATION	05.08.A2

THE INFORMATION, INCLUDING ESTIMATED QUANTITIES OF WORK, SHOWN ON THESE SHEETS IS BASED ON LIMITED INVESTIGATIONS BY THE STATE AND IS IN NO WAY WARRANTED TO INDICATE THE CONDITIONS OF ACTUAL QUANTITIES OF WORK WHICH WILL BE REQUIRED.

Plotted Date: 1/17/2020

DESIGNER/DRAFTER: SS
CHECKED BY: BSH
SCALE AS NOTED

STATE OF CONNECTICUT
DEPARTMENT OF TRANSPORTATION

Filename: ...\SB_MSH_BR03903_058_336_FD_Earth_Stabilization_Plan2.dgn

SIGNATURE/BLOCK:
Hardesty & Hanover, LLC
59 Elm Street
New Haven, CT 06510

PROJECT TITLE:
REHABILITATION OF BRIDGE NO. 03903 MOSHER AVE. OVER AMTRAK RAILROAD

TOWN: **GROTON**

DRAWING TITLE: **WEST ABUTMENT EARTH STABILIZATION PLAN**

PROJECT NO. **58-336**

DRAWING NO. **S-08**

SHEET NO. **05.08.A3**

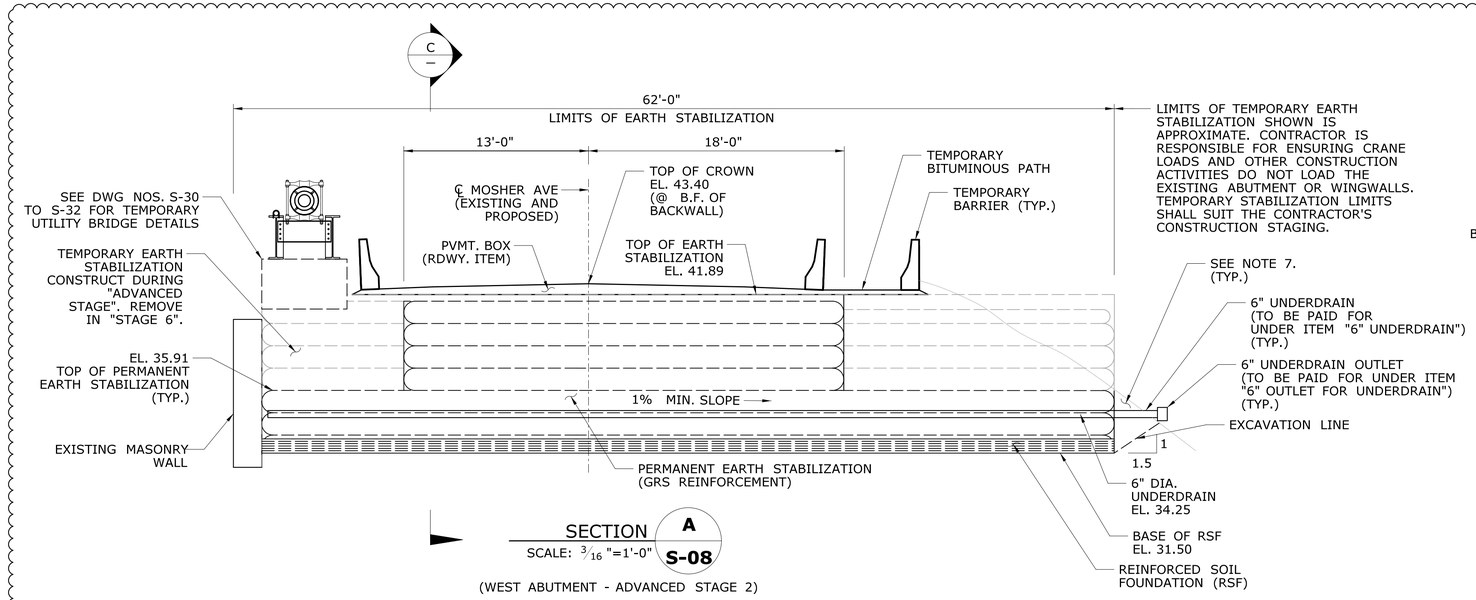

SECTION A / S-08
SCALE: 3/16"=1'-0"
(WEST ABUTMENT - ADVANCED STAGE 2)

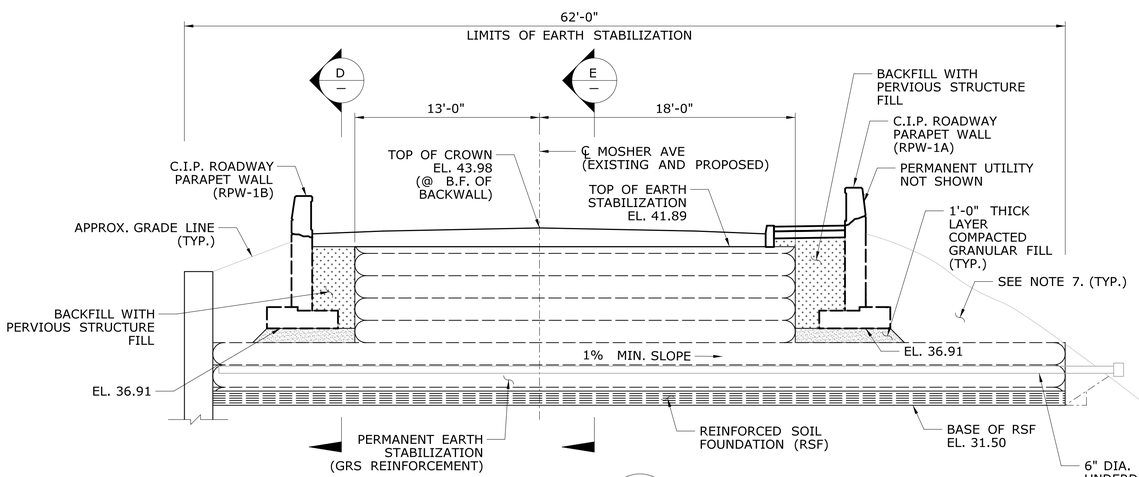

SECTION B / S-08
SCALE: 3/16"=1'-0"
(WEST ABUTMENT - ADVANCED STAGE 6)

LEGEND:

XYZ — DENOTES CONTRACTOR DESIGNED ELEMENTS

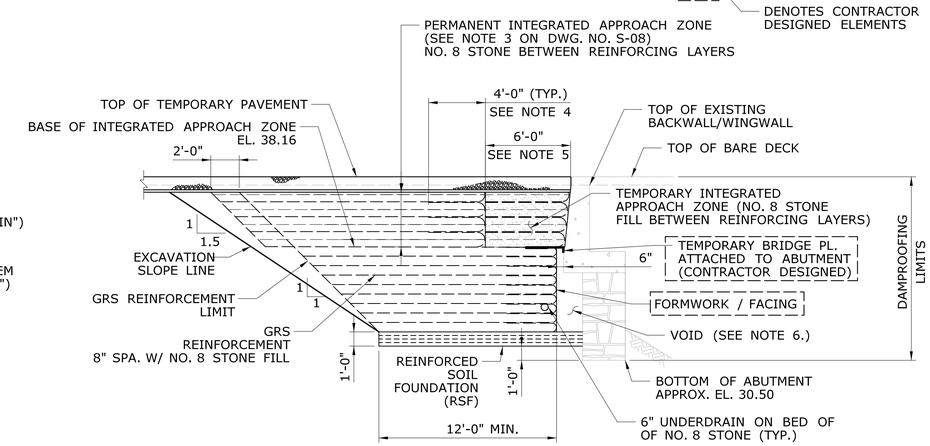

SECTION C / -
SCALE: 3/16"=1'-0"

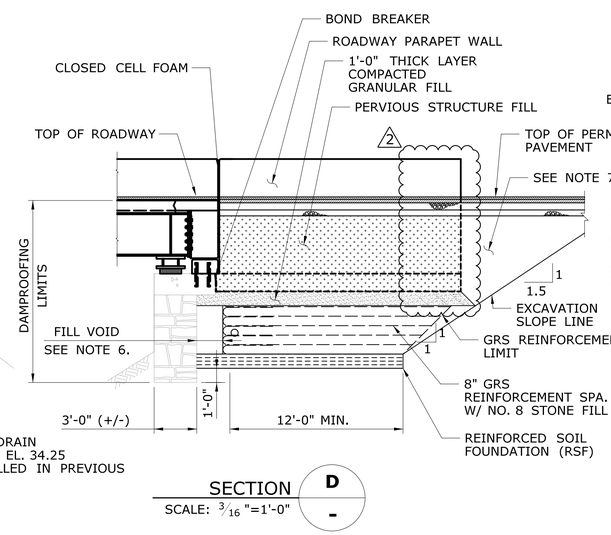

SECTION D / -
SCALE: 3/16"=1'-0"

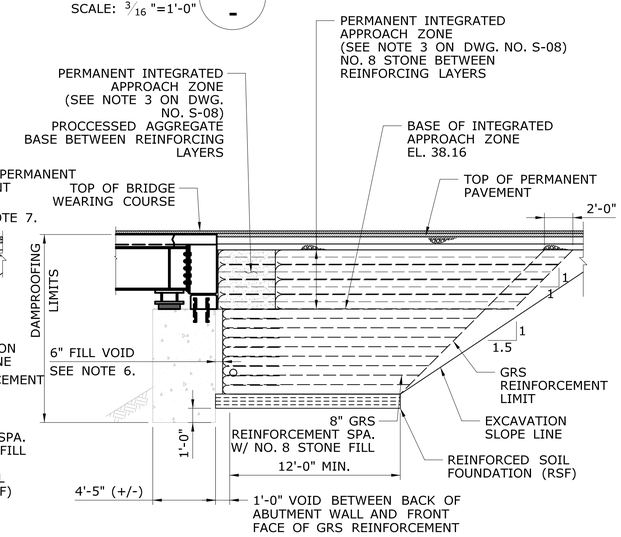

SECTION E / -
SCALE: 3/16"=1'-0"

NOTES:

1. DAMPPROOFING SHALL EXTEND THE FULL LENGTH OF EARTH STABILIZATION ALONG BOTH EAST AND WEST ABUTMENT WALLS (BACK FACE). HEIGHT OF DAMPPROOFING SHALL BE AS SHOWN ON THIS SHEET. DAMPPROOFING SHALL BE PAID FOR UNDER ITEM "DAMPPROOFING".
2. EXISTING AND FINAL GRADE SLOPES NOT SHOWN. SEE HIGHWAY SUBSET FOR CROSS SECTIONS.
3. PERMANENT AND TEMPORARY EARTH STABILIZATION SHALL BE PAID FOR UNDER ITEMS "GRS ABUTMENT AND WINGWALL", "REINFORCED SOIL FOUNDATION (RSF)" AND "REINFORCED INTEGRATED APPROCH".
4. TURN PRIMARY WRAP REINFORCEMENT TO CREATE A 4'-0" TAIL AT THE BRIDGE BACKWALL AND ON BOTH SIDES OF THE INTEGRATED APPROACH.
5. REMOVE THIS SECTION OF INTEGRATED APPROACH FOR BACKWALL DEMOLITION. REPLACE FOR FINAL EARTH STABILIZATION.
6. FILL WITH FLOWABLE FILL AFTER BACKWALL INSTALLATION, PRIOR TO PLACEMENT OF PERMANENT INTEGRATED APPROACH ZONE AND ROADWAY PARAPET WALL. THIS WORK SHALL BE PAID FOR UNDER ITEM " CONTROLLED LOW STRENGTH MATERIAL".
7. BACKFILL AREA ADJACENT TO STRUCTURE IN ACCORDANCE WITH SECTION 2.03 "STRUCTURE EXCAVATION". BACKFILL TO THE EXISTING SURFACE WITH SUITABLE MATERIAL. COST IS INCIDENTAL TO "STRUCTURE EXCAVATION".
8. FOR GRS NOTES SEE DWG. NOS. S-08 & S-08-1.
9. CONTRACTOR IS RESPONSIBLE FOR SUPPORTING AND PROTECTING THE AT-GRADE TEMPORARY WATER MAIN DURING THE ABUTMENT STABILIZATION EXCAVATION AND INSTALLATION OF GRS.
10. TEMPORARY BRIDGE PLATE SHALL BE SUITABLE TO SUPPORT TRAFFIC LOADS ABOVE WHILE IN PLACE. AN EQUIVALENT EARTH SURCHARGE MAY BE USED FOR DESIGN.
11. BOULDERS AND/OR PREVIOUS WALL MATERIAL ENCOUNTERED DURING EXCAVATION IS INCIDENTAL TO "STRUCTURE EXCAVATION".

ADDENDUM NO. 3

REV.	DATE	REVISION DESCRIPTION	SHEET NO.
-	-	-	-
-	-	-	-
-	-	-	-
-	-	-	-
2	1/17/20	ROADWAY PARAPET WALL EXTENDED	05.09.A3
1	12/3/19	REVISIONS TO GRS ABUTMENT STABILIZATION	05.09.A2

THE INFORMATION, INCLUDING ESTIMATED QUANTITIES OF WORK, SHOWN ON THESE SHEETS IS BASED ON LIMITED INVESTIGATIONS BY THE STATE AND IS IN NO WAY WARRANTED TO INDICATE THE CONDITIONS OF ACTUAL QUANTITIES OF WORK WHICH WILL BE REQUIRED.

Plotted Date: 1/17/2020

DESIGNER/DRAFTER: SS
CHECKED BY: BSH
SCALE AS NOTED

STATE OF CONNECTICUT
DEPARTMENT OF TRANSPORTATION

Filename: ...\SB_MSH_BR03903_058_336_FD_West_Earth Stabilization.dgn

SIGNATURE/BLOCK: Hardesty & Hanover, LLC, 59 Elm Street, New Haven, CT 06510

PROJECT TITLE: REHABILITATION OF BRIDGE NO. 03903 MOSHER AVE. OVER AMTRAK RAILROAD

TOWN: GROTON

DRAWING TITLE: WEST ABUTMENT EARTH STABILIZATION

PROJECT NO. 58-336
DRAWING NO. S-09
SHEET NO. 05.09.A3

TABLE OF WORKING POINTS

WORKING POINT	DESCRIPTION	COORDINATES		STATION*	OFFSET*	ELEVATION**
		NORTHING	EASTING			
WP-1	℄ OF WEST BEARINGS @ CENTERLINE OF MOSHER AVE.	680814.60	1208925.43	6+39.35	0.00	44.05
WP-2	REAR FACE OF RPW-1A AT BEGIN OF WALL	680833.70	1208935.84	6+36.02	-21.06	44.21
WP-3	REAR FACE OF RPW-1A AT END OF WALL	680841.29	1208925.91	6+23.52	-21.06	44.21
WP-4	REAR FACE OF RPW-1B AT BEGIN OF WALL	680803.91	1208913.07	6+36.02	21.06	43.63
WP-5	REAR FACE OF RPW-1B AT END OF WALL	680814.23	1208899.56	6+19.02	21.06	43.63

* ALL STATIONS AND OFFSETS ARE BASED ON THE MOSHER AVE. LAYOUT LINE
** ALL WORKING POINT ELEVATIONS ARE TAKEN AT THE ROADWAY GUTTER ELEVATION

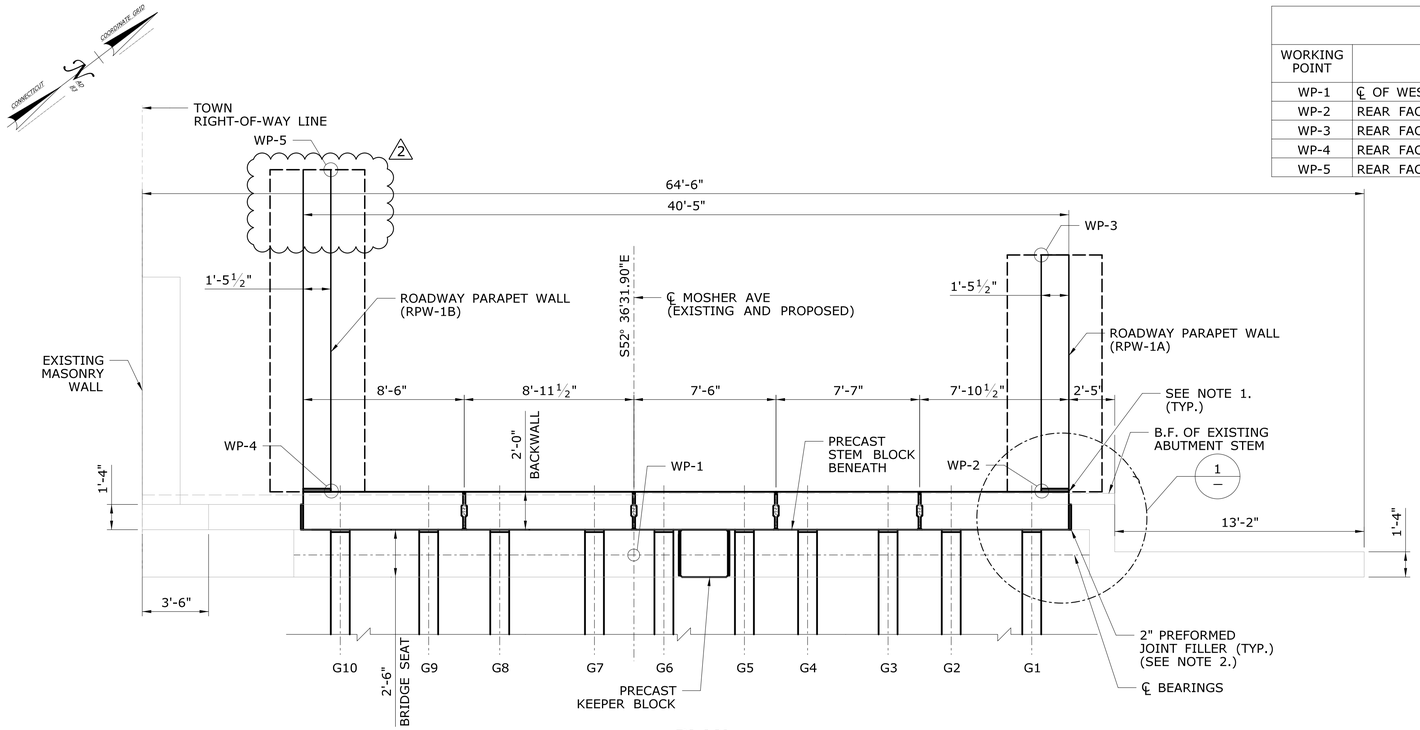

PLAN
WEST ABUTMENT
SCALE: ¼" = 1'-0"

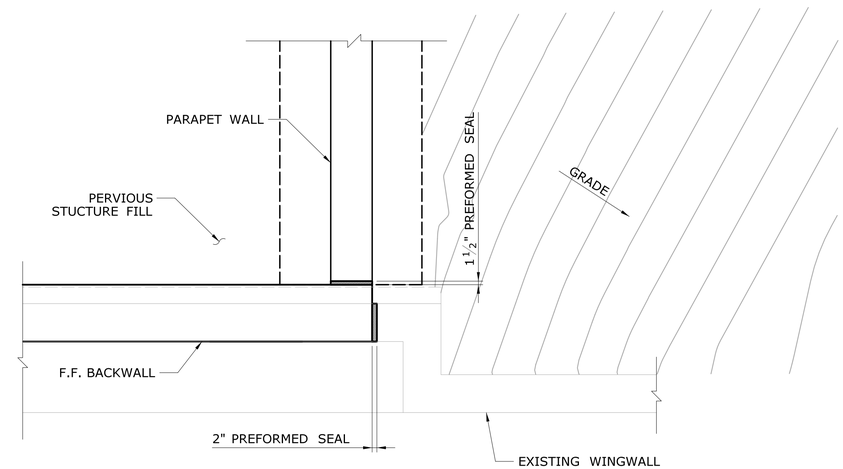

DETAIL 1 / -
SCALE: ½"=1'-0"

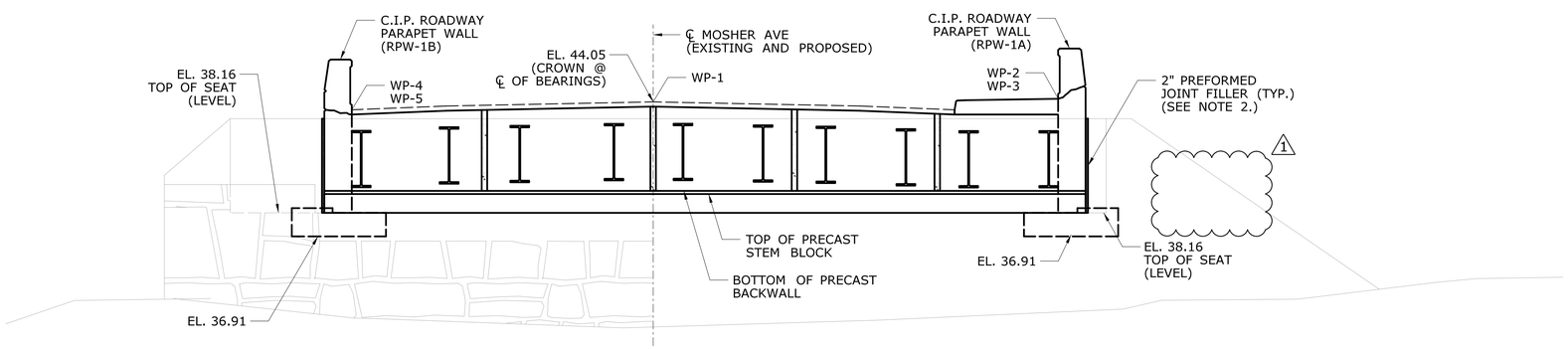

ELEVATION
WEST ABUTMENT (LOOKING WEST)
SCALE: ¼" = 1'-0"

NOTES:

1. CAST-IN-PLACE ROADSIDE BARRIER WALL FOOTINGS SHALL BE CAST DIRECTLY AGAINST EXISTING ABUTMENT CONCRETE AND/OR MASONRY.
2. PRECAST BACKWALL (INCLUDING PREFORMED JOINT SEALER BETWEEN PRECAST BACKWALL AND EXISTING BACKWALL) SHALL BE PAID FOR UNDER ITEM "PRECAST CONCRETE BRIDGE COMPONENTS".
3. FOR PRECAST BACKWALL DETAILS, SEE DWG. NO. S-14 TO S-15.
4. FOR ROADWAY PARAPET WALL DETAILS, SEE DWG. NO. S-18.
5. FOR PRECAST KEEPER BLOCK DETAILS, SEE DWG. NO. S-17.
6. PRECAST STEM BLOCK TO BE PAID UNDER ITEM "PRECAST SUBSTRUCTURE ELEMENTS".
7. PREFORMED JOINT SEAL BETWEEN ROADSIDE PARAPET WALL AND NEW PRECAST BACKWALL SHALL BE PAID FOR UNDER ITEM " PREFORMED JOINT SEAL".

ADDENDUM NO. 3

REV.	DATE	REVISION DESCRIPTION	SHEET NO.
-	-	-	-
-	-	-	-
-	-	-	-
-	-	-	-
2	1/17/20	ROADWAY PARAPET WALL EXTENDED	05.11.A3
1	12/3/19	WEEP HOLE REMOVED	05.11.A2

THE INFORMATION, INCLUDING ESTIMATED QUANTITIES OF WORK, SHOWN ON THESE SHEETS IS BASED ON LIMITED INVESTIGATIONS BY THE STATE AND IS IN NO WAY WARRANTED TO INDICATE THE CONDITIONS OF ACTUAL QUANTITIES OF WORK WHICH WILL BE REQUIRED.

Plotted Date: 1/17/2020

DESIGNER/DRAFTER: SS
CHECKED BY: BSH
SCALE AS NOTED

STATE OF CONNECTICUT
DEPARTMENT OF TRANSPORTATION

Filename: ...\SB_MSH_BR03903_058_336_FD_West Abutment Reconstruction.dgn

SIGNATURE/BLOCK:
Hardesty & Hanover, LLC
59 Elm Street
New Haven, CT 06510

PROJECT TITLE:
REHABILITATION OF BRIDGE NO. 03903 MOSHER AVE. OVER AMTRAK RAILROAD

TOWN: **GROTON**
DRAWING TITLE: **WEST ABUTMENT RECONSTRUCTION**

PROJECT NO. **58-336**
DRAWING NO. **S-11**
SHEET NO. **05.11.A3**

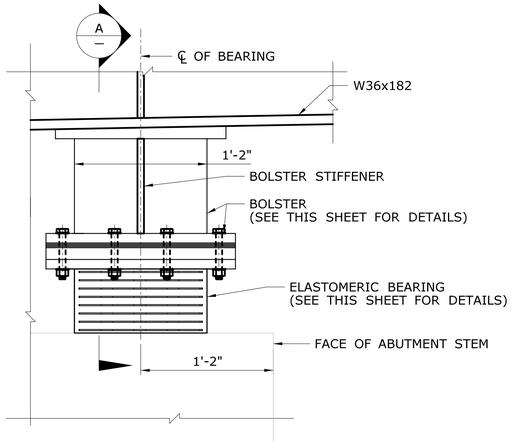

BEARING CONNECTION DETAIL - WITH BOLSTER

SCALE: $1\frac{1}{2}$" = 1'-0"

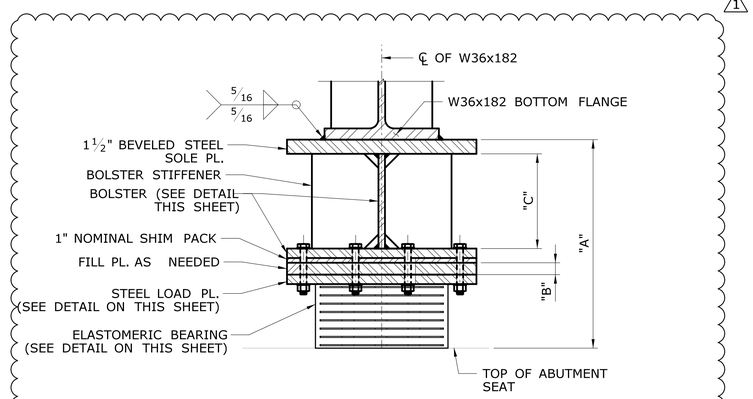

SECTION A – SCALE: $1\frac{1}{2}$"=1'-0"

1

	STRINGER NO.	BOLSTER	"A" (IN)	"B" (IN)	"C" (IN)	BOTTOM OF GIRDER ELEVATION (AT ℄ GIRDER) (FT)
			BOLSTER AND SHIM HEIGHTS*			
EAST ABUTMENT	1	N	10 1/2	1 1/8	-	39.59
	2	N	10 1/2	1 1/8	-	39.59
	3	N	11 3/4	2 3/8	-	39.69
	4	N	13 5/16	3 15/16	-	39.83
	5	N	14 1/8	4 3/4	-	39.89
	6	Y	15 1/8	3/4	4	39.98
	7	Y	15 1/16	11/16	4	39.97
	8	N	13 13/16	4 7/16	-	39.87
	9	N	12 15/16	3 9/16	-	39.79
	10	N	10 3/4	1 3/8	-	39.61
WEST ABUTMENT	1	Y	15 3/4	3/8	5	39.47
	2	Y	15 3/4	3/8	5	39.47
	3	Y	17	5/8	6	39.58
	4	Y	18 5/8	1/4	8	39.71
	5	Y	19 7/16	1/16	9	39.78
	6	Y	20 7/16	1/16	10	39.86
	7	Y	20 5/16	15/16	9	39.85
	8	Y	19 1/8	3/4	8	39.75
	9	Y	18 1/4	7/8	7	39.68
	10	Y	16	5/8	5	39.49

* ALL CALCULATED FILL PLATE AND BOLSTER HEIGHTS ASSUME A 1" NOMINAL SHIM PACK.

BEARINGS W/ BOLSTER: A = B + C + 1" LOAD PL. + 1.5" NOM. BEVELED SOLE PL. + 1" BOLSTER BOTTOM PL. + 1" SHIM PACK + 6.75" ELASTOMERIC BEARING

BEARINGS W/O BOLSTER: A = B + 1" LOAD PL. + 1.5" NOM. BEVELED SOLE PL. + 1" SHIM PACK + 6.75" ELASTOMERIC BEARING

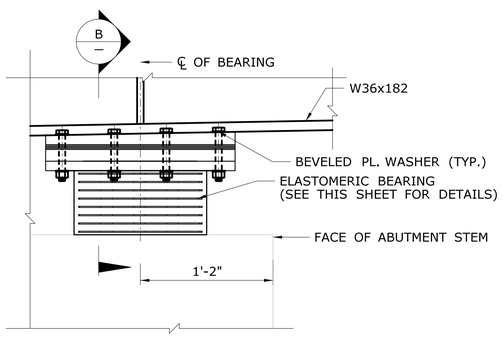

BEARING CONNECTION DETAIL - NO BOLSTER

SCALE: $1\frac{1}{2}$" = 1'-0"

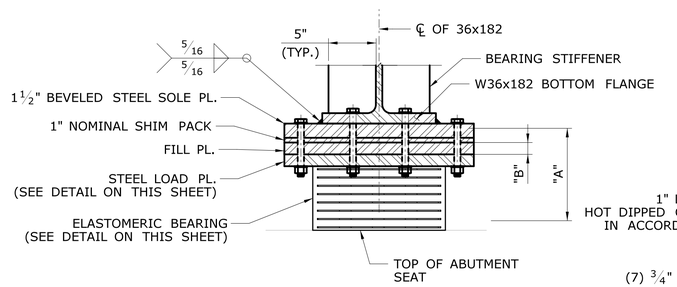

SECTION B – SCALE: $1\frac{1}{2}$"=1'-0"

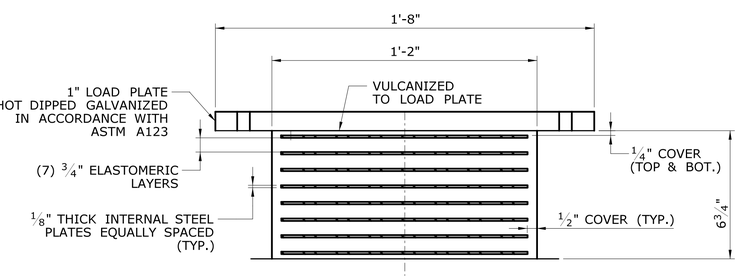

ELEVATION: ELASTOMERIC BEARING

SCALE: 3" = 1'-0"

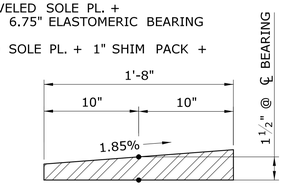

WEST BEVELED SOLE PLATE

SCALE: N.T.S.

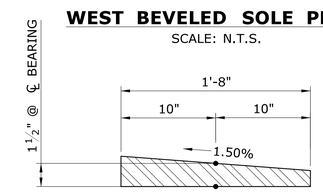

EAST BEVELED SOLE PLATE

SCALE: N.T.S.

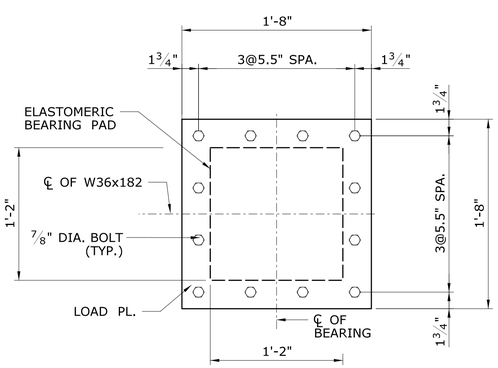

PLAN: LOAD PLATE

SCALE: $1\frac{1}{2}$" = 1'-0"

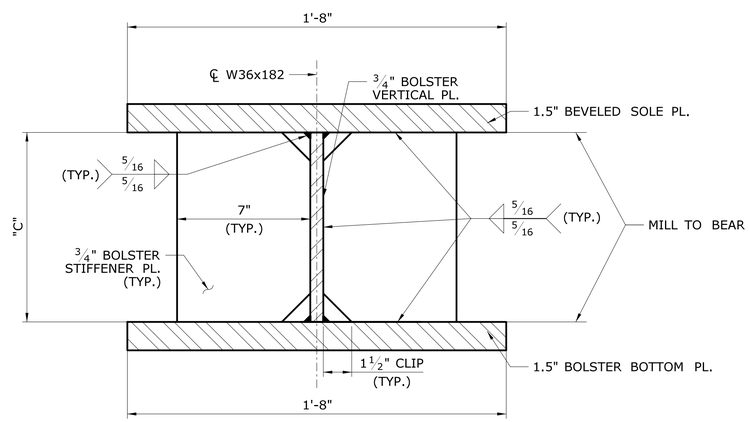

BOLSTER DETAIL

SCALE: 3" = 1'-0"

ELASTOMERIC BEARING DESIGN LOADS (SERVICE)

STRINGER NO.	MAX. DL (KIPS)	MAX. LL+I (KIPS)
G1	96	73
G2	56	47
G3	46	40
G4	44	58
G5	37	38
G6	39	42
G7	39	55
G8	43	45
G9	41	48
G10	59	69

NOTES:

1. BOLSTERS AND BEVELED SOLE PLATES SHIP ATTACHED TO PBUS. THESE ELEMENTS ARE TO BE INCLUDED FOR PAYMENT UNDER ITEM "PRECAST CONCRETE/STEEL COMPOSITE SUPERSTRUCTURE".
2. SHIMS, FILL PLATES, BOLTS, NUTS AND WASHERS ARE TO BE PAID FOR UNDER ITEM "STRUCTURAL STEEL (SITE NO.1)".
3. STEEL BOLSTERS, BOLSTER PLATES, SOLE PLATE AND LOAD PLATES SHALL BE HOT DIPPED GALVANIZED IN ACCORDANCE WITH ASTM A123.
4. MACHINING OF SOLE PLATE AND BOLSTER PLATE SURFACES SHALL BE PERFORMED AFTER GALVANIZING. MACHINED SURFACE SHALL RECIEVE A PRIME COAT AFTER MACHINING.
5. ELASTOMERIC BEARING PADS AND LOAD PLATES SHALL BE PAID FOR UNDER THE ITEM "STEEL LAMINATED ELASTOMERIC BEARINGS".
6. SEE DRAWING S-04 FOR GIRDER NUMBERING.
7. DURING PBU DELIVERY OVER ALREADY PLACED PBUS, THE MAXIMUM LIVE LOAD ON BEARINGS SHALL NOT EXCEED THE MAXIMUM VALUE LISTED ON THE TABLE ON THIS SHEET TITLED "ELASTOMERIC BEARING DESIGN LOADS (SERVICE)".
8. 2 ELASTOMERIC BEARING PADS SHALL BE LOW TEMPERATURE GRADE 3, 60 DUROMETER (SHORE A) ELASTOMER, WITH A SHEAR MODULUS OF 0.160 AT 73 DEG F.

ADDENDUM NO. 3

REV.	DATE	REVISION DESCRIPTION	SHEET NO.
-	-	-	-
-	-	-	-
-	-	-	-
-	-	-	-
2	1/17/20	ADDED ELASTOMER MATERIAL NOTE	05.15.A3
1	12/3/19	REVISED TABLE AND REVISED SECTION A	05.15.A2

THE INFORMATION, INCLUDING ESTIMATED QUANTITIES OF WORK, SHOWN ON THESE SHEETS IS BASED ON LIMITED INVESTIGATIONS BY THE STATE AND IS IN NO WAY WARRANTED TO INDICATE THE CONDITIONS OF ACTUAL QUANTITIES OF WORK WHICH WILL BE REQUIRED.

Plotted Date: 1/17/2020

DESIGNER/DRAFTER: SS
CHECKED BY: BSH
SCALE AS NOTED

STATE OF CONNECTICUT
DEPARTMENT OF TRANSPORTATION

Filename: ...\SB_MSH_BR03903_058_336_FD_Bearings.dgn

SIGNATURE/BLOCK: Hardesty & Hanover, LLC, 59 Elm Street, New Haven, CT 06510

PROJECT TITLE: REHABILITATION OF BRIDGE NO. 03903 MOSHER AVE. OVER AMTRAK RAILROAD

TOWN: GROTON

DRAWING TITLE: BEARING DETAILS

PROJECT NO. 58-336
DRAWING NO. S-15
SHEET NO. 05.15.A3

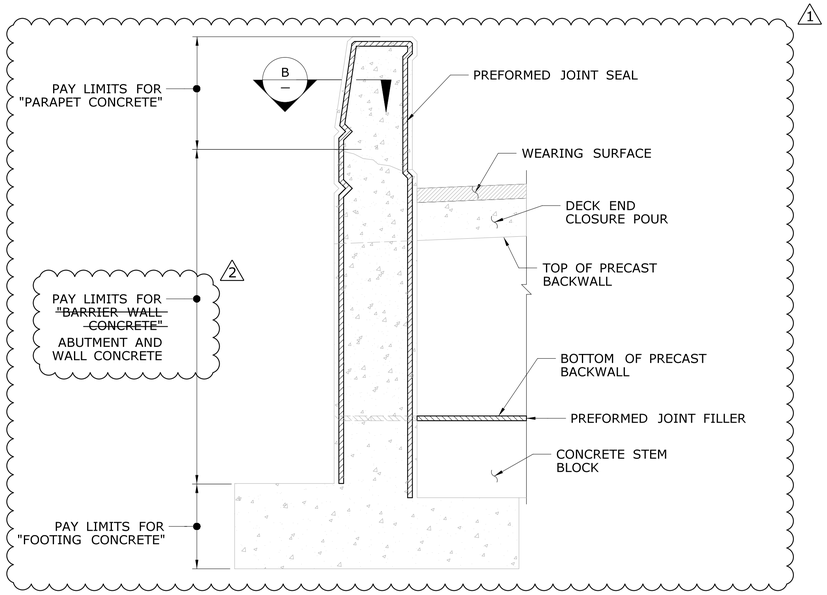

SECTION A
SCALE: N.T.S.

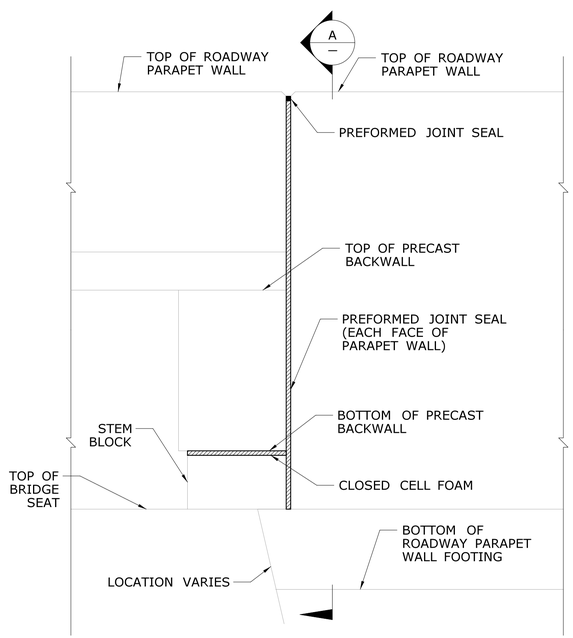

BRIDGE JOINT ELEVATION
SCALE: N.T.S.

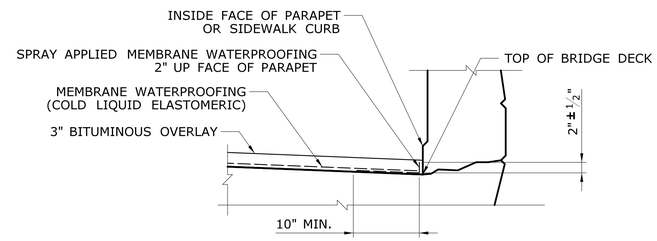

* SOUTH GUTTERLINE SHOWN (NORTH GUTTERLINE SIMILAR)

MEMBRANE WATERPROOFING DETAIL AT GUTTERLINE
SCALE: 3/4" = 1'-0"

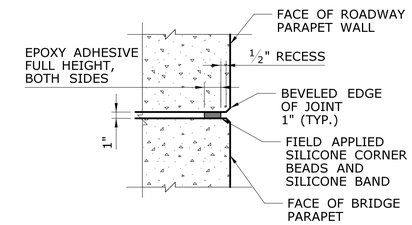

SECTION B
SCALE: N.T.S.

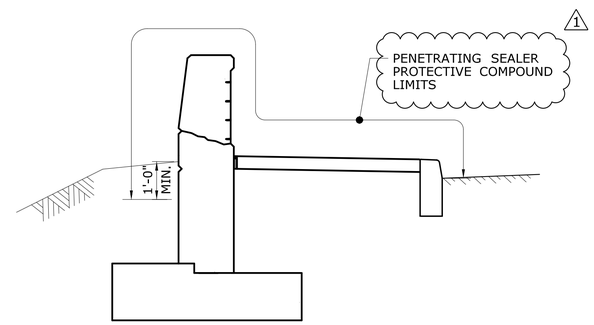

PENETRATING SEALER PROTECTIVE COMPOUND LIMITS
SCALE: 3/4" = 1'-0"

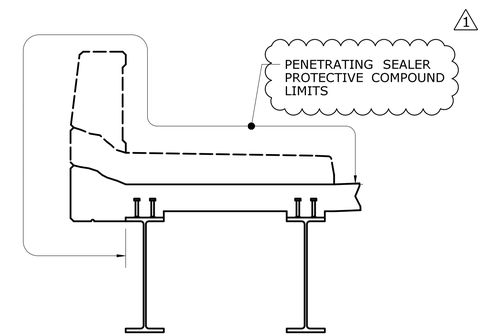

PENETRATING SEALER PROTECTIVE COMPOUND LIMITS
SCALE: 3/4" = 1'-0"

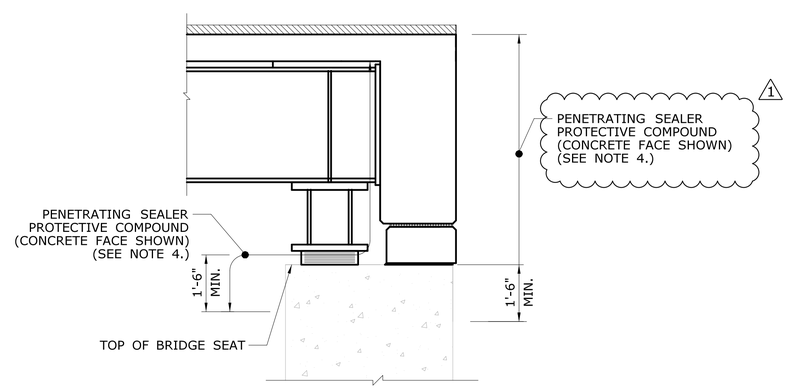

PENETRATING SEALER PROTECTIVE COMPOUND LIMITS
SCALE: 3/4" = 1'-0"

NOTES:

1. PRIOR TO INSTALLING THE PREFORMED JOINT SEAL, CLEAN CONCRETE SIDES BY SANDBLASTING, DUST SHALL BE REMOVED BY THE METHOD APPROVED BY THE ENGINEER. THIS WORK SHALL BE INCLUDED FOR PAYMENT UNDER ITEM 0520041A "PREFORMED JOINT SEAL".
2. ROADWAY PARAPET WALL SHALL BE SEALED WITHIN THE LIMITS SHOWN ON THIS SHEET. THIS WORK SHALL BE PAID FOR UNDER ITEM NO. 0819002 "PENETRATING SEALER PROTECTIVE COMPOUND".
3. ROADWAY PARAPET WALL REINFORCEMENT SHALL BE PAID FOR UNDER ITEM NO. 0602030 "DEFORMED STEEL BARS - GALVANIZED".
4. APPLY PROTECTIVE SEALER TO EXISTING BRIDGE SEATS AND PRECAST BACKWALL FACES. VERTICAL LIMIT OF APPLICATION IS 1-'6" BELOW TOP OF BRIDGE SEAT TO TOP OF PRECAST BACKWALL. SEALANT IS TO BE PAID FOR UNDER THE ITEM "PENETRATING SEALER AND PROTECTIVE COMPOUND".

ADDENDUM NO. 3

REV.	DATE	REVISION DESCRIPTION	SHEET NO.
-	-	-	-
-	-	-	-
-	-	-	-
-	-	-	-
2	1/17/20	REVISED ITEM CALL-OUTS	05.18.A3
1	12/3/19	REVISED ITEM CALL-OUTS	05.18.A2

THE INFORMATION, INCLUDING ESTIMATED QUANTITIES OF WORK, SHOWN ON THESE SHEETS IS BASED ON LIMITED INVESTIGATIONS BY THE STATE AND IS IN NO WAY WARRANTED TO INDICATE THE CONDITIONS OF ACTUAL QUANTITIES OF WORK WHICH WILL BE REQUIRED.

Plotted Date: 1/17/2020

DESIGNER/DRAFTER: SS
CHECKED BY: BSH
SCALE AS NOTED

STATE OF CONNECTICUT
DEPARTMENT OF TRANSPORTATION

Filename: ...\SB_MSH_BR03903_058_336_FD_Misc. Details.dgn

SIGNATURE/BLOCK:
Hardesty & Hanover, LLC
59 Elm Street
New Haven, CT 06510
Hardesty & Hanover

PROJECT TITLE:
REHABILITATION OF BRIDGE NO. 03903 MOSHER AVE. OVER AMTRAK RAILROAD

TOWN: **GROTON**
DRAWING TITLE: **MISCELLANEOUS DETAILS**

PROJECT NO. **58-336**
DRAWING NO. **S-18**
SHEET NO. **05.18.A3**