04 - STRUCTURE
INDEX OF DRAWINGS

DRAWING NUMBER	DRAWING TITLE	DRAWING NUMBER	DRAWING TITLE
S-01	STRUCTURE INDEX OF DRAWINGS		
S-02	GENERAL PLAN AND ELEVATION		
S-03	TYPICAL CROSS SECTION		
S-04	ABUTMENT DETAILS		
S-05	PIER 2 DETAILS - 1		
S-06	PIER 2 DETAILS - 2		
S-07	SUBSTRUCTURE REPAIR DETAILS		
S-08	KEEPER BLOCK DETAILS		
S-09	FRAMING PLAN		
S-10	STEEL REPAIR DETAILS - 1		
S-11	STEEL REPAIR DETAILS - 2		
S-12	EXPANSION AND FIXED BEARINGS		
S-13	EXPANSION BEARING REPLACEMENT		
S-14	DECK PLAN		
S-15	ASPHALTIC PLUG JOINT AND DECK END REPAIRS		
S-16	PREFORMED JOINT SEAL 1		
S-17	PREFORMED JOINT SEAL 2		
S-18	SCUPPER OUTLET DETAILS		
S-19	TWO-TUBE BRIDGE RAIL		

DESIGNED BY:
FUSS & O'NEILL INC.
146 HARTFORD ROAD
MANCHESTER, CT 06040

STATE OF CONNECTICUT STUART H. HARRIS No. 14313 LICENSED PROFESSIONAL ENGINEER

Stuart Harris, P.E.
Fuss & O'Neill
2019.08.08
17:17:44-04'00'

REV.	DATE	REVISION DESCRIPTION	SHEET NO.

THE INFORMATION, INCLUDING ESTIMATED QUANTITIES OF WORK, SHOWN ON THESE SHEETS IS BASED ON LIMITED INVESTIGATIONS BY THE STATE AND IS IN NO WAY WARRANTED TO INDICATE THE CONDITIONS OF ACTUAL QUANTITIES OF WORK WHICH WILL BE REQUIRED.

Plotted Date: 8/7/2019

DESIGNER/DRAFTER: **DLW**
CHECKED BY: **SH**

STATE OF CONNECTICUT
DEPARTMENT OF TRANSPORTATION

Filename: ...\S_01_SB_MSH_Br00980B_0063_0712_INX.dgn

SIGNATURE/ BLOCK:

STATE OF CONNECTICUT STUART H. HARRIS No. 14313 LICENSED PROFESSIONAL ENGINEER

FUSS & O'NEILL
146 Hartford Road
Manchester, CT 06040
(860)646-2469

PROJECT TITLE:
REHABILITATION OF BRIDGE NO. 00980B I-84 TR 826 OVER CONNECTICUT RIVER

TOWN: **HARTFORD**

DRAWING TITLE: **STRUCTURE INDEX OF DRAWINGS**

PROJECT NO. **063-712**
DRAWING NO. **S-01**
SHEET NO. **04.01**

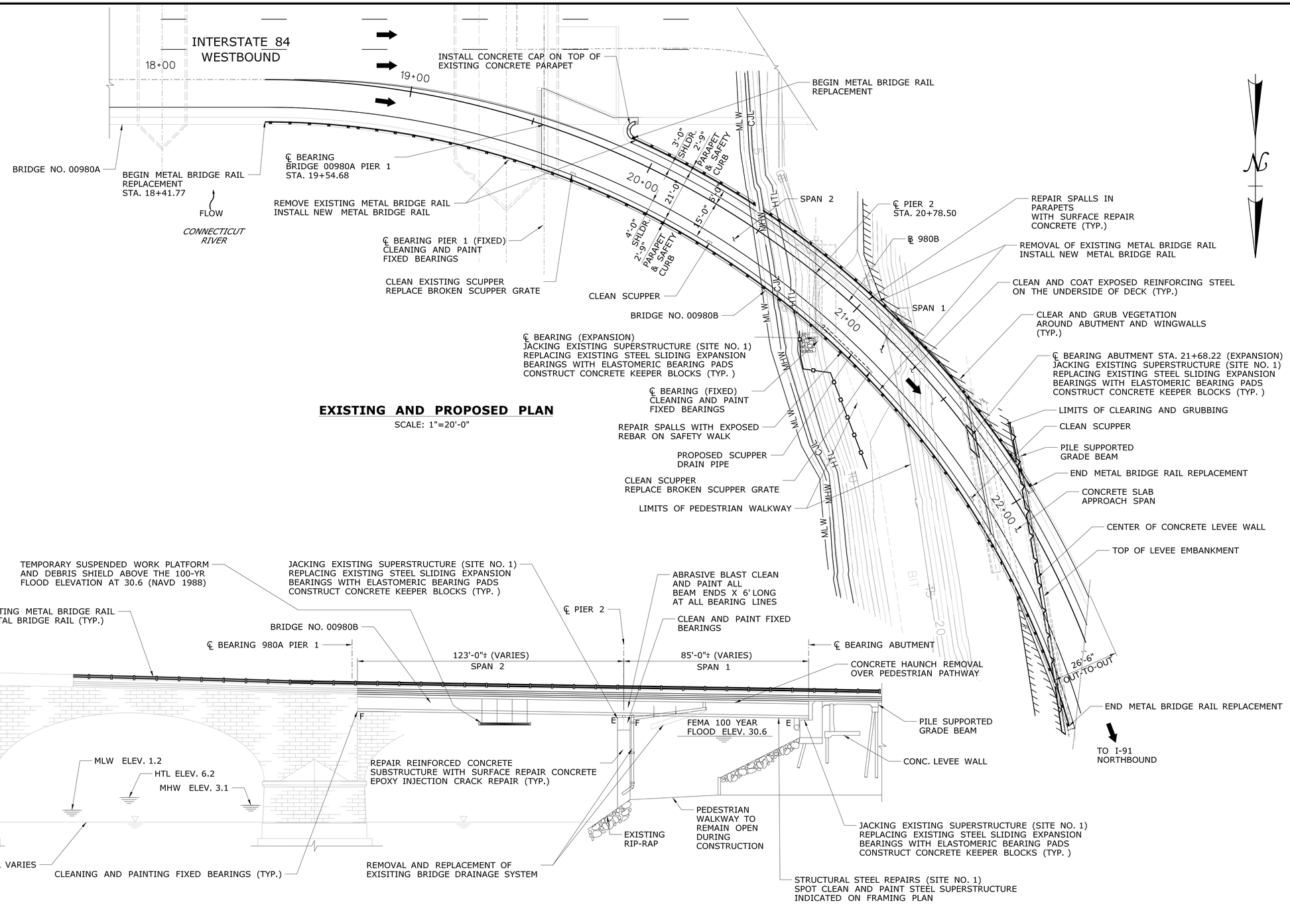

REV.	DATE	REVISION DESCRIPTION	SHEET NO.

Plotted Date: 8/7/2019

DESIGNER/DRAFTER: DLW
CHECKED BY: SH
SCALE AS NOTED

STATE OF CONNECTICUT
DEPARTMENT OF TRANSPORTATION

Filename: ...\S_02_SB_MSH_Br00980B_0063_0712_GPN.dgn

SIGNATURE/BLOCK:
STATE OF CONNECTICUT — STUART H. HARRIS — No. 14313 — LICENSED PROFESSIONAL ENGINEER

FUSS & O'NEILL
146 Hartford Road
Manchester, CT 06040
(860)646-2469

PROJECT TITLE:
REHABILITATION OF BRIDGE NO. 00980B I-84 TR 826 OVER CONNECTICUT RIVER

TOWN: **HARTFORD**

DRAWING TITLE: **GENERAL PLAN AND ELEVATION**

PROJECT NO. 063-712
DRAWING NO. S-02
SHEET NO. 04.02

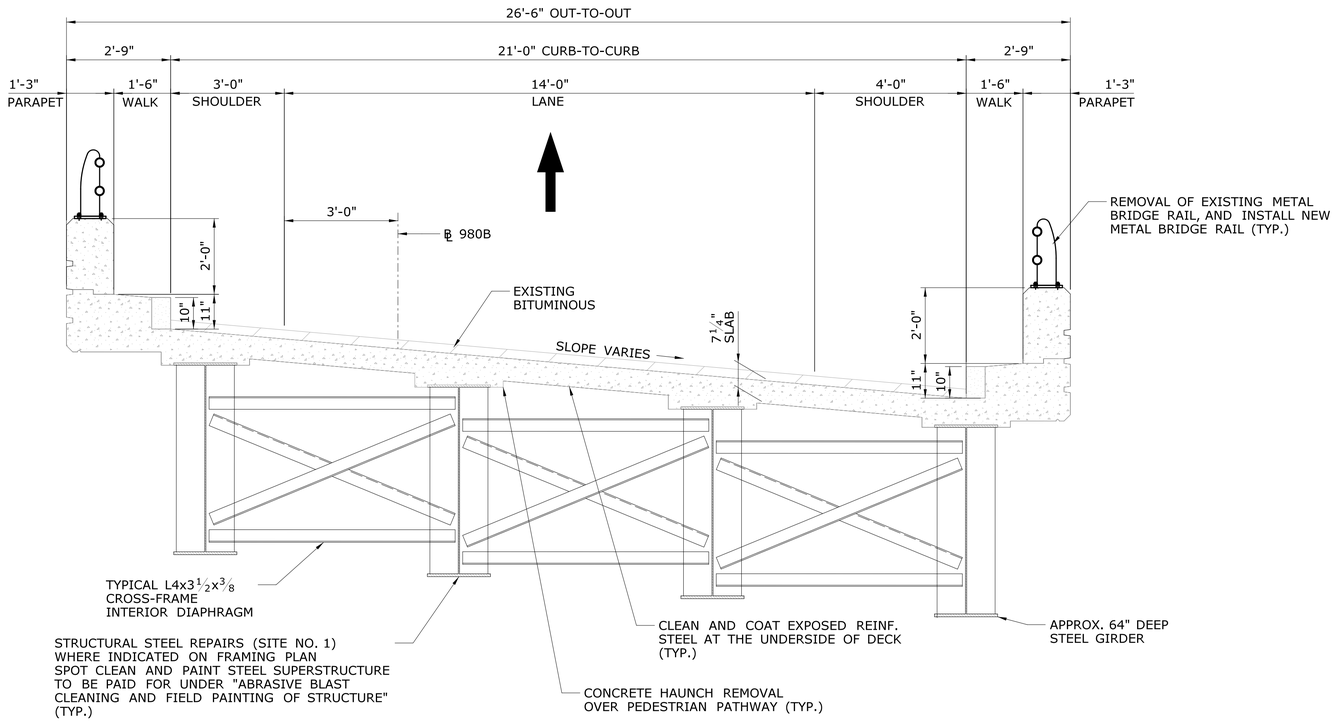

EXISTING AND PROPOSED SECTION

SCALE: ½" = 1'-0"

QUANTITIES		
ITEM	UNIT	QTY.
LEAD COMPLIANCE FOR ABRASIVE BLAST CLEANING AND MISCELLANEOUS TASKS	L.S.	L.S.
WATER RESCUE OPERATIONS	L.S.	L.S.
HANDLING AND DISPOSAL OF REGULATED ITEMS	EST.	EST.
1/2" PREFORMED EXPANSION JOINT FILLER	S.F.	6
JACKING EXISTING SUPERSTRUCTURE (SITE NO. 1)	L.S.	L.S.
TEMPORARY WORK PLATFORM	L.S.	L.S.
CLEAN EXISTING SCUPPERS	EA.	4
MODIFY SCUPPER	EA.	2
REMOVAL AND REPLACEMENT OF EXISTING BRIDGE DRAINAGE SYSTEM	L.F.	65
ASPHALTIC PLUG EXPANSION JOINT SYSTEM	C.F.	95
PREFORMED JOINT SEAL	L.F.	154
BEARING REPLACEMENT WITH ELASTOMERIC BEARING PADS	EA.	11
CONSTRUCT CONCRETE KEEPER BLOCKS	EA.	2
SURFACE REPAIR CONCRETE	C.F.	540
PARAPET CONCRETE	L.F.	11
PARTIAL DEPTH PATCH	C.F.	325
EPOXY INJECTION CRACK REPAIR	L.F.	30
DEFORMED STEEL BARS - EPOXY COATED	LB	500
DRILLING HOLES AND GROUTING DOWELS	EA	40
CLEAN AND COAT EXPOSED REINFORCING STEEL	L.F.	50
STRUCTURAL STEEL	LB.	100
STRUCTURAL STEEL REPAIRS (SITE NO. 1)	C.W.T.	80
ABRASIVE BLAST CLEANING AND FIELD PAINTING OF BEAM ENDS (SITE NO. 1)	L.S.	L.S.
DISPOSAL OF LEAD DEBRIS FROM ABRASIVE BLAST CLEANING	TON	2
CLASS 1 CONTAINMENT AND COLLECTION OF SURFACE PREPARATION DEBRIS (SITE NO. 1)	L.S.	L.S.
REMOVAL OF GRANITE STONE CURBING	L.F.	10
PENETRATING SEALER PROTECTIVE COMPOUND	S.F.	315
TWO-TUBE BRIDGE RAIL	L.F.	680
REMOVAL OF EXISTING METAL BRIDGE RAIL	L.F.	700
CONCRETE HAUNCH REMOVAL	L.F.	505
STEEL JUNCTION BOX COVERS	EA	1

CONCRETE DISTRIBUTION		
SUPERSTRUCTURE (W/ SURFACE REPAIR)	C.Y.	3
SUBSTRUCTURE (W/ KEEPER BLOCKS)	C.Y.	21
TOTAL	C.Y.	24

INSPECTION OF FIELD WELDS		
METHODS	UNIT	QUANTITY
ULTRASONIC	INCH	-
MAGNETIC PARTICLE	FEET	40

GENERAL NOTES:

SPECIFICATIONS: CONNECTICUT DEPARTMENT OF TRANSPORTATION FORM 817 WITH JULY 2018 SUPPLEMENTAL REVISIONS.

DESIGN SPECIFICATIONS: AASHTO LRFD BRIDGE DESIGN SPECIFICATIONS 8TH EDITION - 2017, AS SUPPLEMENTED BY THE CONNECTICUT DEPARTMENT OF TRANSPORTATION BRIDGE DESIGN MANUAL (2003).

ALLOWABLE DESIGN STRESSES:
ABUTMENT AND WALL CONCRETE..... BASED ON f'c = 3000 PSI
SURFACE REPAIR CONCRETE..... BASED ON f'c = 4000 PSI
PARAPET CONCRETE..... BASED ON f'c = 4000 PSI

REINFORCEMENT
(ASTM A615 GRADE 60) ..... Fy = 60000 PSI

FUTURE PAVING ALLOWANCE: NONE

DIMENSIONS: WHEN DIMENSIONS ARE GIVEN TO LESS THAN THREE DECIMAL PLACES, THE OMITTED DIGITS SHALL BE ASSUMED TO BE ZEROS

CONCRETE NOTES:

REMAIN-IN-PLACE FORMS: THE USE OF REMAIN-IN-PLACE FORMS ON THIS STRUCTURE IS NOT ALLOWED.

PARAPET CONCRETE: PARAPET CONCRETE SHALL BE USED FOR THE CONCRETE PARAPET CAP AT BRIDGE 980A AND THE CURBS AT THE JOINT REPLACEMENTS.

ABUTMENT AND WALL CONCRETE: ABUTMENT AND WALL CONCRETE SHALL BE USED IN THE KEEPER BLOCKS.

JOINT SEAL: SEE SPEICAL PROVISION SECTION 6.01.

EXPOSED EDGES: EXPOSED EDGES OF CONCRETE SHALL BE BEVELED 1" x 1" UNLESS DIMENSIONED OTHERWISE.

CONCRETE COVER: ALL REINFORCEMENT SHALL HAVE TWO INCHES COVER UNLESS DIMENSIONED OTHERWISE.

REINFORCEMENT: ALL REINFORCEMENT SHALL BE ASTM A615 GRADE 60.

EPOXY COATED: EPOXY COATED REINFORCEMENT SHALL BE USED IN THE CONCRETE PARAPET CAP AND THE CONCRETE CURBS AT THE JOINT REPLACEMENTS.

PREFORMED EXPANSION JOINT FILLER: INSTALLED BETWEEN GRANITE AND CONCRETE CURBS AT DECK JOINTS.

CONSTRUCTION JOINTS: CONSTRUCTION JOINTS, OTHER THAN THOSE SHOWN ON THE PLANS WILL NOT BE PERMITTED WITHOUT THE PRIOR APPROVAL OF THE ENGINEER.

THE SPECIFIED CONCRETE STRENGTH USED IN DESIGN, F'c, OF THE CONCRETE COMPONENETS IS NOTED ABOVE. THE MINIMUM COMPRESSIVE STRENGTH OF THE CONCRETE IN THE CONSTRUCTED COMPONENTS SHALL CONFORM TO THE REQUIREMENT OF SECTION 6.01 CONCRETE FOR STRUCTURES.

THE FOLLOWING PAY ITEMS AND CONCRETE CLASSES ARE REQUIRED FOR CAST-IN-PLACE BRIDGE COMPONENTS:

ITEM	BRIDGE COMPONENTS	PCC CLASS
SURFACE REPAIR CONCRETE	ABUTMENT AND PIER WALL REPAIRS	PCC04481
PARAPET CONCRETE	PARAPET CAP	PCC04462
ABUTMENT AND WALL CONCRETE	KEEPER BLOCKS	PCC03340

STRUCTURE ELEVATIONS

ALL ELEVATIONS ARE ON THE NAVD88 DATUM. HOWEVER, THE CONTRACTOR SHOULD NOTE THAT ALL STRUCTURE FEATURE ELEVATIONS SHOWN ON THESE PLANS WERE CONVERTED TO THE NAVD88 DATUM FROM THE ORIGINAL CONSTRUCTION PLANS WHICH USED THE NGVD29 DATUM. STRUCTURE ELEVATIONS ARE THEREFORE APPROXIMATE AND ARE PROVIDED FOR REFERENCE ONLY.

NOTICE TO BRIDGE INSPECTORS

THE DEPARTMENT'S BRIDGE SAFETY PROCEDURES REQUIRE THIS BRIDGE TO BE INSPECTED FOR, BUT NOT LIMITED TO, ALL APPROPRIATE COMPONENTS INDICATED IN THE GOVERNING MANUALS FOR BRIDGE INSPECTION. ATTENTION MUST BE GIVEN TO INSPECTING THE FOLLOWING SPECIAL COMPONENTS AND DETAILS. (THE LISTING FOR COMPONENTS FOR SPECIFIC ATTENTION SHALL NOT BE CONSTRUED TO REDUCE THE IMPORTANCE OF INSPECTION OF ANY OTHER COMPONENT OF THE STRUCTURE.) THE FREQUENCY OF INSPECTION OF THIS STRUCTURE SHALL BE IN ACCORDANCE WITH THE GOVERNING MANUALS FOR BRIDGE INSPECTION, UNLESS OTHERWISE DIRECTED BY THE MANAGER OF BRIDGE SAFETY AND EVALUATION.

COMPONENT OR DETAIL	STRUCTURE SHEET REFERENCE
NONE	NONE

REV.	DATE	REVISION DESCRIPTION	SHEET NO.

Plotted Date: 8/7/2019

DESIGNER/DRAFTER: DLW
CHECKED BY: SH
SCALE AS NOTED

STATE OF CONNECTICUT
DEPARTMENT OF TRANSPORTATION

Filename: ...\S_03_SB_MSH_Br00980B_0063_0712_TYP_.dgn

SIGNATURE/BLOCK:
STATE OF CONNECTICUT · SUJAY H. KAPADIA · No. 14313 · LICENSED PROFESSIONAL ENGINEER

FUSS & O'NEILL
146 Hartford Road
Manchester, CT 06040
(860)646-2469

PROJECT TITLE:
REHABILITATION OF
BRIDGE NO. 00980B I-84 TR 826
OVER CONNECTICUT RIVER

TOWN: HARTFORD

DRAWING TITLE:
TYPICAL
CROSS SECTION

PROJECT NO. 063-712
DRAWING NO. S-03
SHEET NO. 04.03

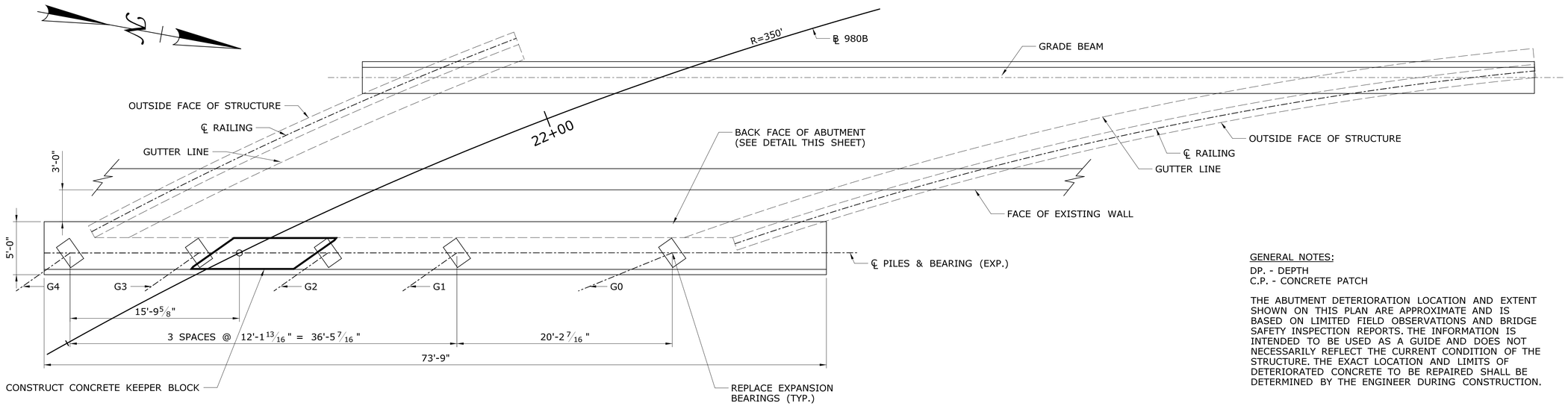

ABUTMENT PLAN

SCALE: 3/16"=1'

GENERAL NOTES:

DP. - DEPTH
C.P. - CONCRETE PATCH

THE ABUTMENT DETERIORATION LOCATION AND EXTENT SHOWN ON THIS PLAN ARE APPROXIMATE AND IS BASED ON LIMITED FIELD OBSERVATIONS AND BRIDGE SAFETY INSPECTION REPORTS. THE INFORMATION IS INTENDED TO BE USED AS A GUIDE AND DOES NOT NECESSARILY REFLECT THE CURRENT CONDITION OF THE STRUCTURE. THE EXACT LOCATION AND LIMITS OF DETERIORATED CONCRETE TO BE REPAIRED SHALL BE DETERMINED BY THE ENGINEER DURING CONSTRUCTION.

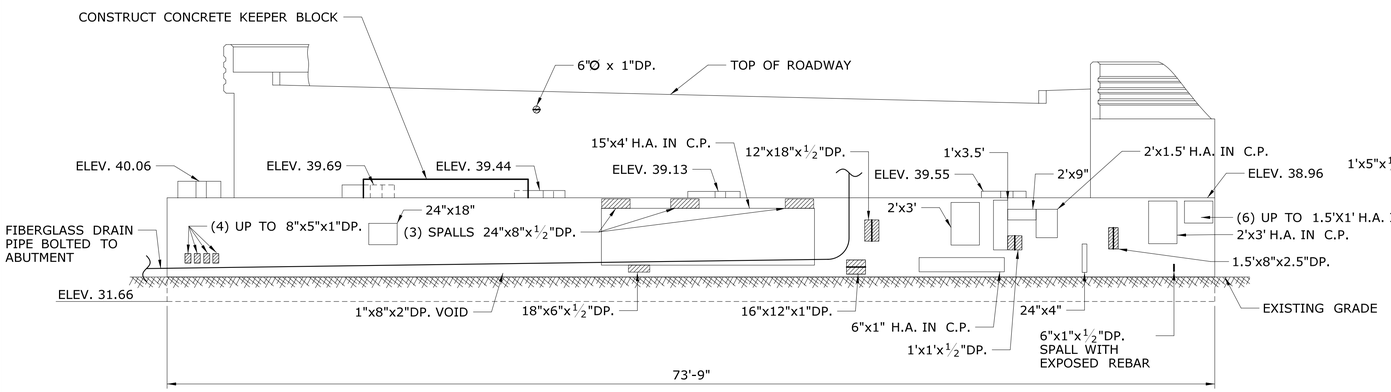

ABUTMENT ELEVATION

SCALE: 3/16"=1'

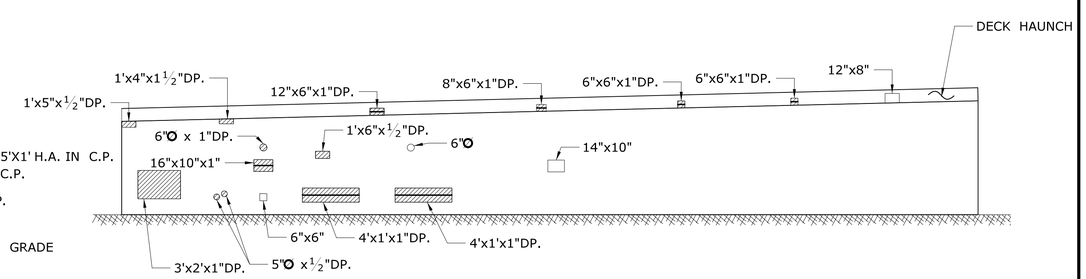

ABUTMENT ELEVATION - BACK FACE

SCALE: 3/16"=1'

LEGEND

- SPALL AREA
- SPALL AREA W/ EXPOSED REBAR
- SHALLOW REINFORCING
- HOLLOW AREA

REV.	DATE	REVISION DESCRIPTION	SHEET NO.

Plotted Date: 8/7/2019

DESIGNER/DRAFTER: DLW
CHECKED BY: SH
SCALE AS NOTED

STATE OF CONNECTICUT
DEPARTMENT OF TRANSPORTATION

Filename: ...\S..04_SB_MSH_Br00980B_0063_0712_ABT.dgn

SIGNATURE/BLOCK:

STATE OF CONNECTICUT — STUART H. HARPER — No. 14313 — LICENSED PROFESSIONAL ENGINEER

FUSS & O'NEILL
146 Hartford Road
Manchester, CT 06040
(860)646-2469

PROJECT TITLE:
REHABILITATION OF
BRIDGE NO. 00980B I-84 TR 826
OVER CONNECTICUT RIVER

TOWN: HARTFORD

DRAWING TITLE: ABUTMENT DETAILS

PROJECT NO. 063-712
DRAWING NO. S-04
SHEET NO. 04.04

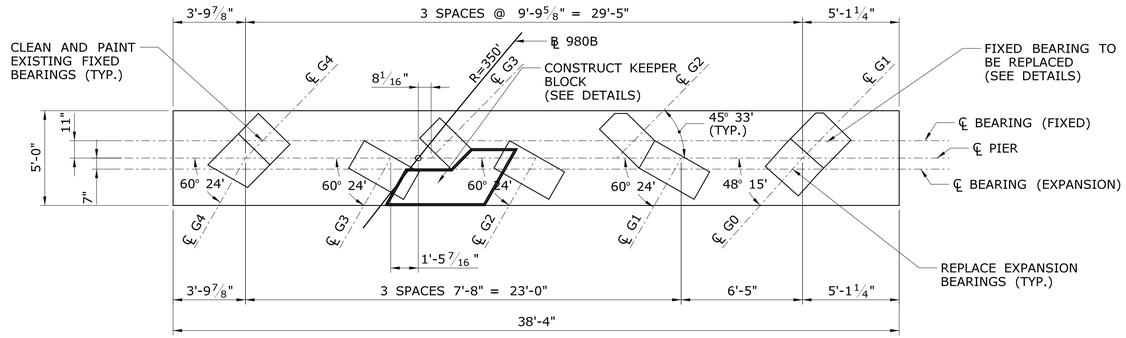

PIER 2 PLAN

SCALE: 1/4" = 1'-0"

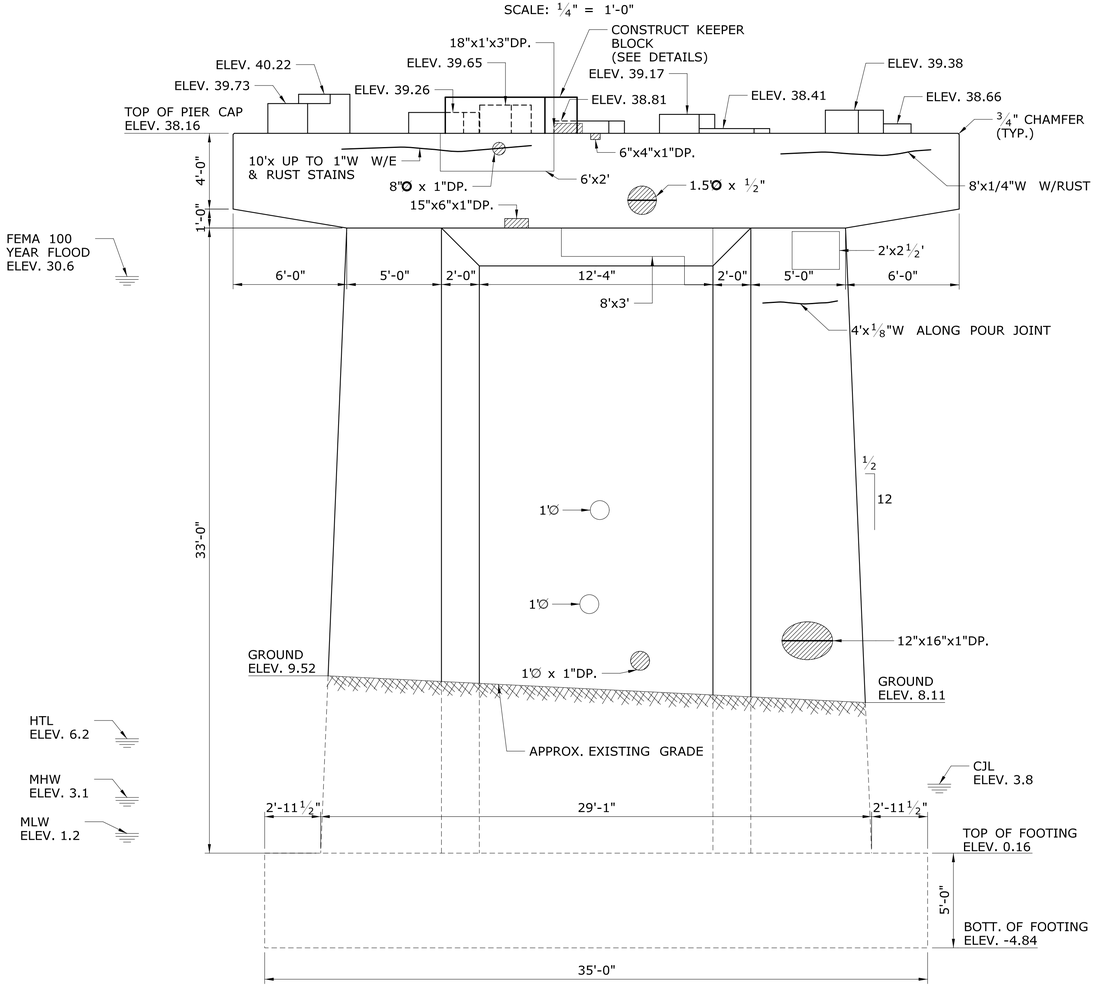

PIER 2 - EAST ELEVATION (RIVER SIDE)

SCALE: 1/4" =1'-0"

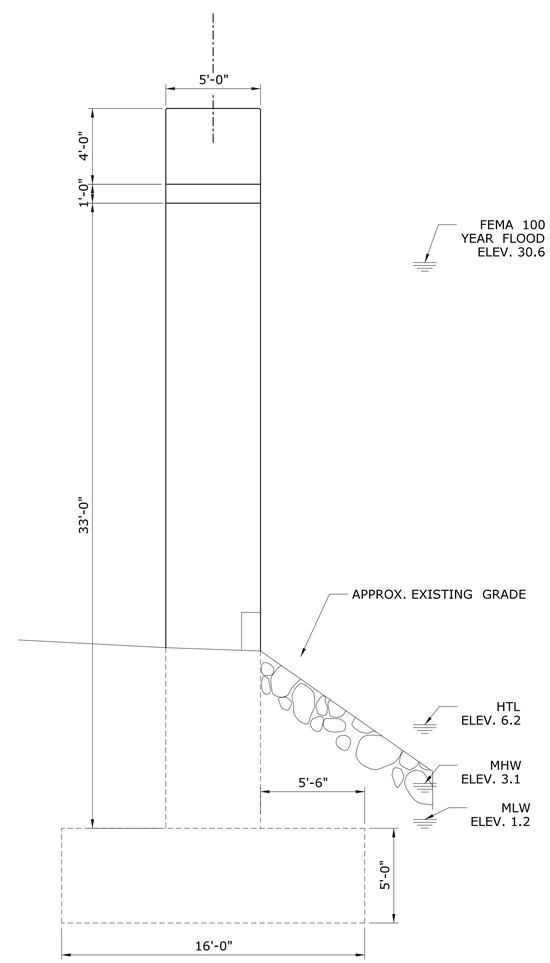

PIER 2 - SOUTH ELEVATION

SCALE: 1/4" = 1'-0"

GENERAL NOTES:

DP. - DEPTH

THE SUBSTRUCTURE DETERIORATION LOCATION AND EXTENT SHOWN ON THIS PLAN ARE APPROXIMATE AND IS BASED ON LIMITED FIELD OBSERVATIONS AND BRIDGE SAFETY INSPECTION REPORTS. THE INFORMATION IS INTENDED TO BE USED AS A GUIDE AND DOES NOT NECESSARILY REFLECT THE CURRENT CONDITION OF THE STRUCTURE. THE EXACT LOCATION AND LIMITS OF DETERIORATED CONCRETE TO BE REPAIRED SHALL BE DETERMINED BY THE ENGINEER DURING CONSTRUCTION.

LEGEND

- SPALL AREA
- SPALL AREA W/ EXPOSED REBAR
- SHALLOW REINFORCING
- HOLLOW AREA

REV.	DATE	REVISION DESCRIPTION	SHEET NO.

Plotted Date: 8/7/2019

DESIGNER/DRAFTER: DLW
CHECKED BY: SH
SCALE AS NOTED

STATE OF CONNECTICUT
DEPARTMENT OF TRANSPORTATION

Filename: ...\S_05_SB_MSH_Br00980B_0063_0712_PIR1.dgn

SIGNATURE/BLOCK:

FUSS & O'NEILL
146 Hartford Road
Manchester, CT 06040
(860)646-2469

PROJECT TITLE:
REHABILITATION OF BRIDGE NO. 00980B I-84 TR 826 OVER CONNECTICUT RIVER

TOWN: HARTFORD

DRAWING TITLE: PIER 2 DETAILS - 1

PROJECT NO. 063-712
DRAWING NO. S-05
SHEET NO. 04.05

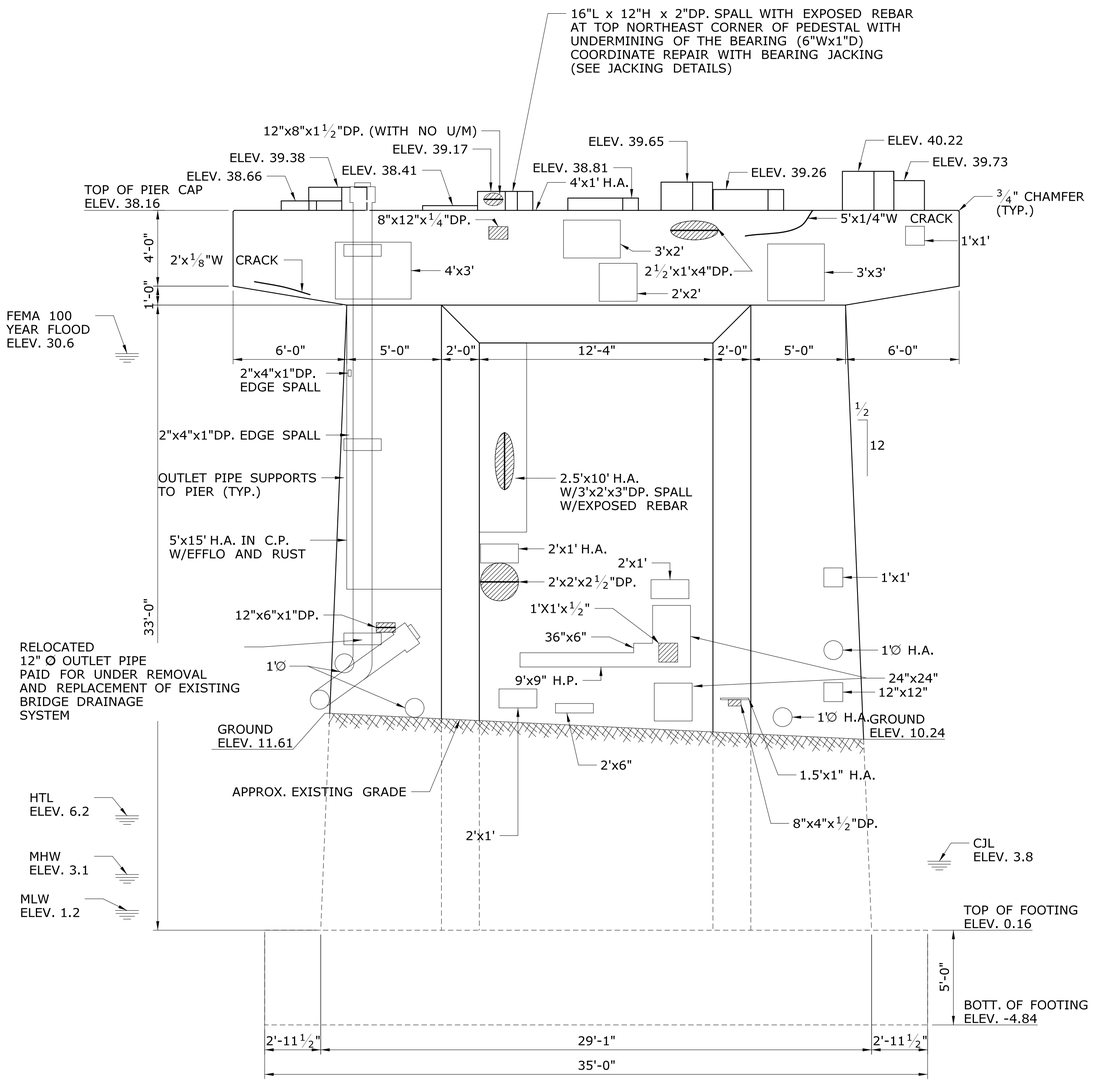

PIER 2 - WEST ELEVATION (TRAIL SIDE)

SCALE: ¼" =1'-0"

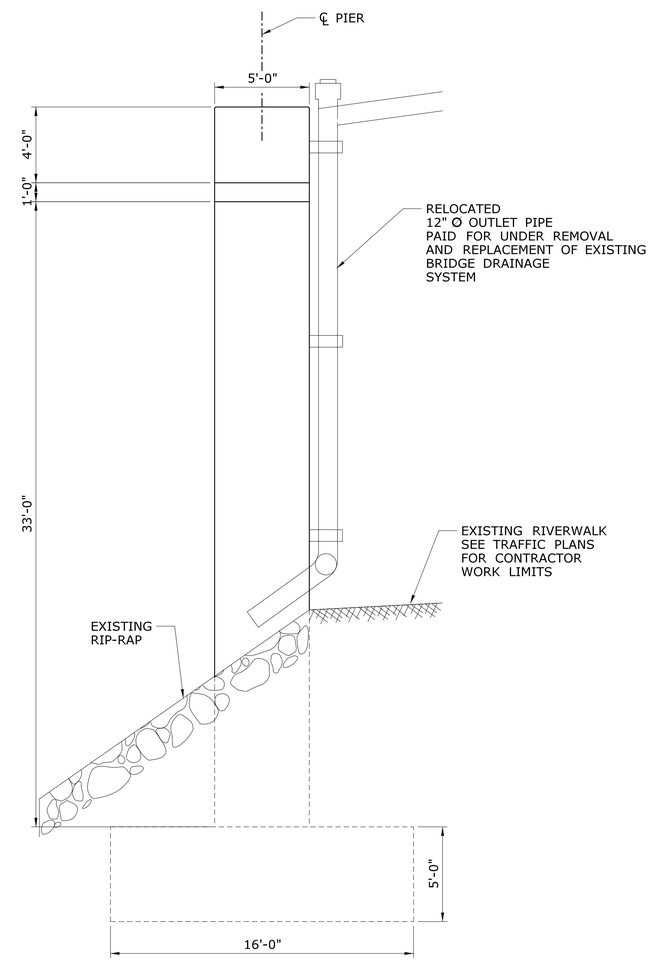

PIER 2 - NORTH ELEVATION

SCALE: ¼" = 1'-0"

GENERAL NOTES:

DP - DEPTH
C.P. - CONCRETE PATCH
U/M - UNDERMINING

THE SUBSTRUCTURE DETERIORATION LOCATION AND EXTENT SHOWN ON THIS PLAN ARE APPROXIMATE AND IS BASED ON LIMITED FIELD OBSERVATIONS AND BRIDGE SAFETY INSPECTION REPORTS. THE INFORMATION IS INTENDED TO BE USED AS A GUIDE AND DOES NOT NECESSARILY REFLECT THE CURRENT CONDITION OF THE STRUCTURE. THE EXACT LOCATION AND LIMITS OF DETERIORATED CONCRETE TO BE REPAIRED SHALL BE DETERMINED BY THE ENGINEER DURING CONSTRUCTION.

LEGEND

- SPALL AREA
- SPALL AREA W/ EXPOSED REBAR
- SHALLOW REINFORCING
- HOLLOW AREA

REV.	DATE	REVISION DESCRIPTION	SHEET NO.

Plotted Date: 8/7/2019

DESIGNER/DRAFTER: **DLW**
CHECKED BY: **SH**
SCALE AS NOTED

STATE OF CONNECTICUT
DEPARTMENT OF TRANSPORTATION

Filename: ...\S_06_SB_MSH_Br00980B_0063_0712_PIR2_.dgn

SIGNATURE/BLOCK:
STATE OF CONNECTICUT — STUART H. HARRIS — No. 14313 — LICENSED PROFESSIONAL ENGINEER

FUSS & O'NEILL
146 Hartford Road
Manchester, CT 06040
(860)646-2469

PROJECT TITLE:
REHABILITATION OF BRIDGE NO. 00980B I-84 TR 826 OVER CONNECTICUT RIVER

TOWN: **HARTFORD**

DRAWING TITLE: **PIER 2 DETAILS - 2**

PROJECT NO. **063-712**
DRAWING NO. **S-06**
SHEET NO. **04.06**

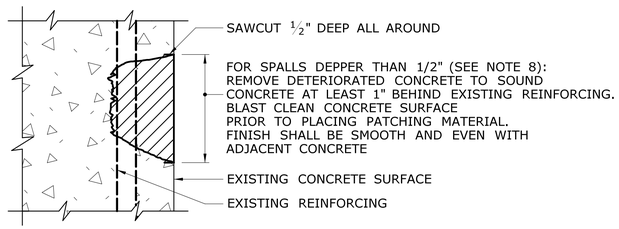

VERTICAL SURFACE CONCRETE REPAIR WITHOUT EXPOSED REINFORCING

SCALE: 3" = 1'-0"

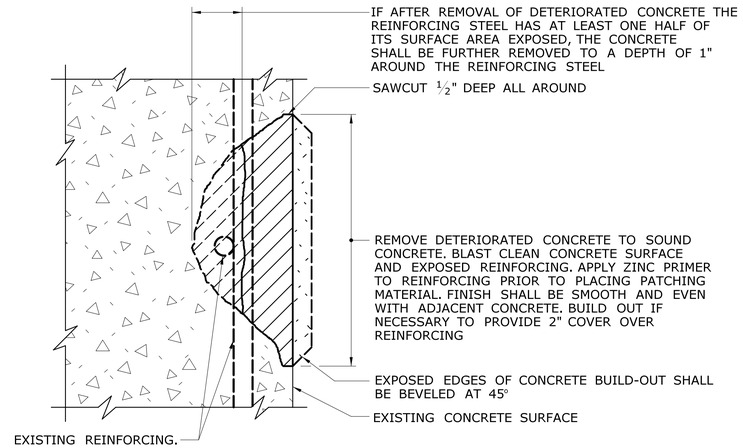

VERTICAL SURFACE CONCRETE REPAIR WITH EXPOSED REINFORCING

SCALE: 3" = 1'-0"

CONCRETE REPAIR NOTES

1. THE ENGINEER SHALL PERFORM AN INSPECTION OF THE EXISTING CONCRETE SURFACES TO DETERMINE THE LOCATION AND EXACT LIMITS OF ALL AREAS TO BE REPAIRED. THE CONTRACTOR SHALL SUPPLY WHATEVER MEANS NECESSARY, INCLUDING BUT NOT LIMITED TO LADDERS, LIFTS, AND TRAFFIC PROTECTION FOR THE ENGINEER TO SAFELY ACCESS THE AREAS FOR INSPECTION. THE COST OF PROVIDING ACCESS FOR THE INSPECTION SHALL BE CONSIDERED INCLUDED IN THE GENERAL COST OF THE PROJECT. THE ENGINEER SHALL THEN DETERMINE THE TYPE OF REPAIR REQUIRED FOR EACH AREA BASED ON GUIDELINES DESCRIBED IN THE CONCRETE PATCHING NOTES ON THIS DRAWING.

2. SEE DRAWING NOS. S-04 THROUGH S-06 FOR SUBSTRUCTURE AREAS NOTED AS DEFICIENT IN THE BRIDGE SAFETY INSPECTION REPORT DATED FROM 2018. NOTED LOCATIONS ARE APPROXIMATE ONLY. THIS IN NO WAY CONSTITUTES THE FULL LIMITS OF SUBSTRUCTURE REPAIRS BUT IS A GUIDELINE OF DEFICIENT AREAS AS OF THE DATE OF THE NOTED INSPECTION. THE BRIDGE SHALL BE SOUNDED AT THE TIME OF THE PROJECT CONSTRUCTION AND THE REMOVAL LIMITS AND CORRESPONDING QUANTITIES MAY INCREASE FROM THOSE SHOWN WITHIN THE PLANS AS A RESULT OF THAT EVALUATION.

3. THE REMOVAL OF DETERIORATED CONCRETE SHALL PROCEED AS DIRECTED BY THE ENGINEER. IF THE REMOVAL OF DETERIORATED CONCRETE BECOMES EXCESSIVE, THE REMOVAL WORK SHALL BE STOPPED AT THAT LOCATION AND THE ENGINEER SHALL BE NOTIFIED IMMEDIATELY.

4. REINFORCING WHICH IS DETERMINED BY THE ENGINEER TO BE IN NEED OF REPLACEMENT SHALL BE REMOVED TO A POINT WHERE IT IS SOUND. THE PATCH SHALL EXTEND A SUFFICIENT DISTANCE BEYOND THIS POINT TO DEVELOP A SPLICE LENGTH SPECIFIED IN THE TABLE ON THIS SHEET. REINFORCING BARS SHALL BE PAID FOR UNDER THE ITEM "DEFORMED STEEL BARS".

5. IF REINFORCEMENT LAP SPLICES ARE ENCOUNTERED IN PIER CAPS OR COLUMNS, THE ENGINEER SHALL BE INFORMED IMMEDIATELY.

6. AT THE OPTION OF THE ENGINEER, THE PATCHING MATERIALS MAY BE SPECIFIED TO REPAIR DETERIORATED AREAS NOT MEETING THE ABOVE REQUIREMENTS.

7. ALL CONCRETE PATCH PERIMETERS SHALL BE SQUARED-OFF OR DIAGONAL WITH ANGLES GREATER THAN 90 DEGREES, BUT NOT CIRCULAR OR IRREGULARLY SHAPED.

8. REPAIR DEPTH SHALL BE 1/2" OR GREATER. REPAIR DEPTHS LESS THAN 1/2" NEED NOT BE REPAIRED.SHALLOW SPALLS WITHOUT EXPOSED REINFORCING SHALL NOT BE PATCHED UNLESS CONCRETE IS REMOVED TO A DEPTH OF 1" BEHIND THE STEEL AND THE AREA REPAIRED WITH "SURFACE REPAIR CONCRETE".

CONCRETE CRACK REPAIR

1. CRACKS IN CONCRETE SURFACES IDENTIFIED ON SHEET S-04 TO S-06 LARGER THAN 1/8" IN WIDTH, OR AS IDENTIFIED BY THE ENGINEER, SHALL BE SEALED WITH AN EPOXY CRACK SEALER, PAID FOR UNDER "EPOXY INJECTION CRACK REPAIR"
2. REPAIRS SHALL BE MADE IN ACCORDANCE WITH THE SPECIAL PROVISION AND MANUFACTURER'S WRITTEN RECOMMENDATIONS.

TABLE OF MIN. SPLICE LENGTHS

BAR SIZE	MIN. SPLICE LENGTH
#5	1'-8"
#6	2'-1"
#7	2'-10"
#8	3'-9"
#9	4'-9"
#10	6'-0"
#11	7'-4"

REV.	DATE	REVISION DESCRIPTION	SHEET NO.

THE INFORMATION, INCLUDING ESTIMATED QUANTITIES OF WORK, SHOWN ON THESE SHEETS IS BASED ON LIMITED INVESTIGATIONS BY THE STATE AND IS IN NO WAY WARRANTED TO INDICATE THE CONDITIONS OF ACTUAL QUANTITIES OF WORK WHICH WILL BE REQUIRED.

Plotted Date: 8/7/2019

DESIGNER/DRAFTER: DLW
CHECKED BY: SH
SCALE AS NOTED

STATE OF CONNECTICUT
DEPARTMENT OF TRANSPORTATION

Filename: ...\S_07_SB_MSH_Br00980B_0063_0712_CLASS-S.dgn

SIGNATURE/BLOCK:

STATE OF CONNECTICUT · JUDY H. HAPPER · No. 14313 · LICENSED PROFESSIONAL ENGINEER

FUSS & O'NEILL
146 Hartford Road
Manchester, CT 06040
(860)646-2469

PROJECT TITLE: REHABILITATION OF BRIDGE NO. 00980B I-84 TR 826 OVER CONNECTICUT RIVER

TOWN: HARTFORD

DRAWING TITLE: SUBSTRUCTURE REPAIR DETAILS

PROJECT NO. 063-712
DRAWING NO. S-07
SHEET NO. 04.07

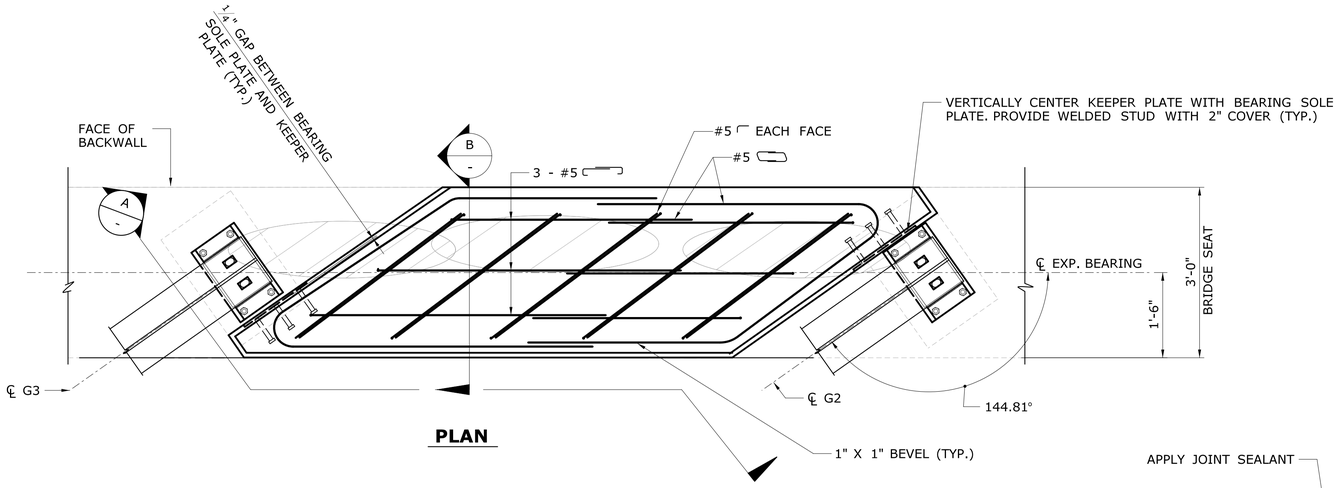

PLAN

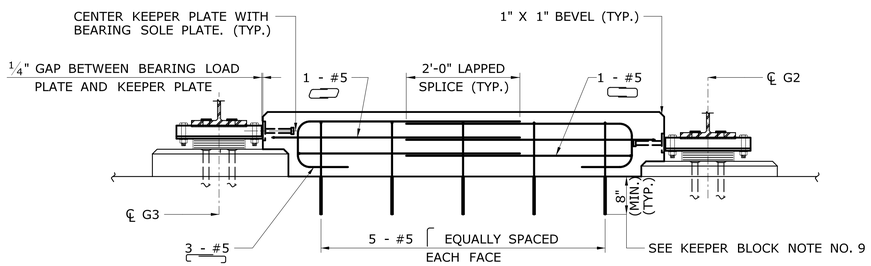

SECTION A

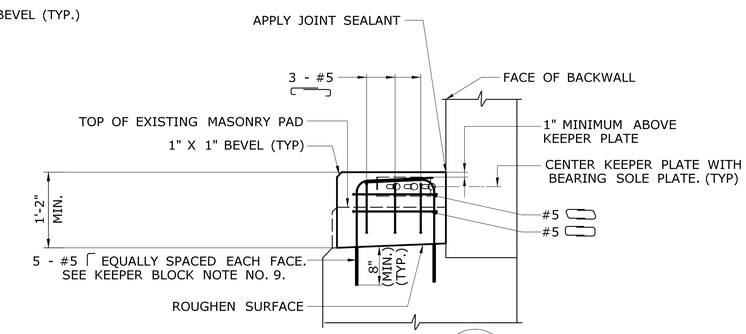

SECTION B

ABUTMENT KEEPER BLOCK DETAILS

SCALE: 3/4" = 1'-0"

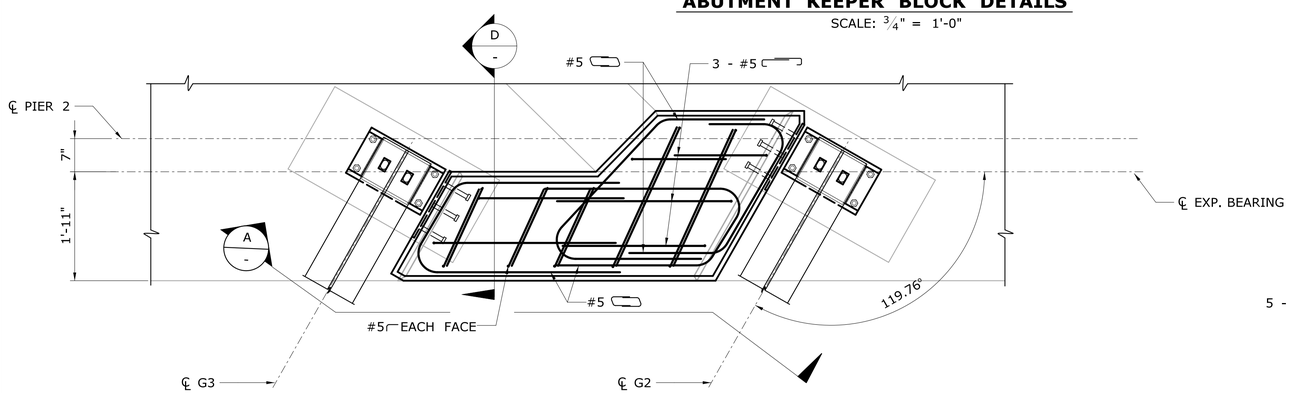

PLAN

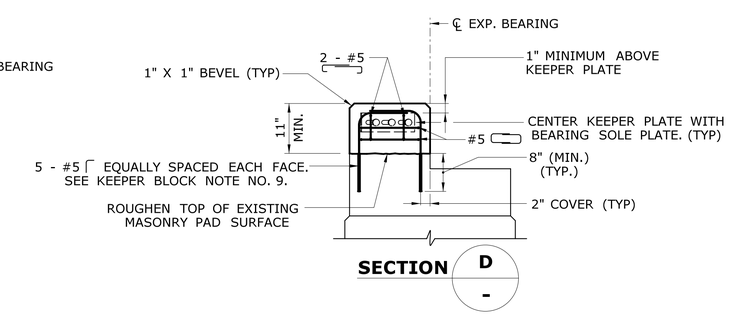

SECTION D

PIER 2 KEEPER BLOCK DETAILS

SCALE: 3/4" = 1'-0"

CONCRETE KEEPER BLOCK NOTES:

1. THE CONCRETE KEEPER BLOCK SHALL BE CLASS PCC03340. REINFORCEMENT SHALL BE ASTM A615, GRADE 60.
2. THE SURFACE ON WHICH THE CONCRETE KEEPER BLOCK IS TO BE POURED SHALL BE INTENTIONALLY ROUGHENED TO A DEPTH OF 1/4".
3. THE CONCRETE KEEPER BLOCK SHALL BE CONSTRUCTED AFTER THE ELASTOMERIC BEARINGS ADJACENT TO THE BLOCK HAVE BEEN INSTALLED.
4. THE COST OF CONSTRUCTING THE CONCRETE KEEPER BLOCKS, INCLUDING THE CONCRETE, ROUGHENING THE EXISTING SURFACE, REINFORCING, DRILLING AND GROUTING REINFORCING STEEL AND STEEL KEEPER PLATES WITH WELDED STUDS, SHALL BE PAID FOR UNDER ITEM "CONSTRUCT CONCRETE KEEPER BLOCKS".
5. THE STEEL KEEPER PLATES SHALL CONFORM TO ASTM A36. THE KEEPER PLATE ASSEMBLY (PLATE AND STUDS) SHALL BE HOT DIP GALVANIZED AFTER FABRICATION IN ACCORDANCE TO THE REQUIREMENT OF SUB ARTICLE M.06.03 (GALVANIZING).
6. PRIOR TO PLACING THE CONCRETE, THE EXISTING CONCRETE SURFACES AND REINFORCEMENT SHALL BE CLEANED AND FREE OF DIRT, DUST, LOOSE RUST AND OTHER FOREIGN MATTER. THE ROUGHENED AND CLEANED CONCRETE SURFACES SHALL BE DAMPENED WITH WATER JUST PRIOR TO PLACING THE CONCRETE. ANY STANDING WATER SHALL BE REMOVED.
7. ALL REINFORCEMENT SHALL HAVE 2" MIN. COVER.
8. THE CONTRACTOR SHALL TAKE ALL PRECAUTIONS TO AVOID DAMAGING EXISTING REINFORCING. IF EXISTING REINFORCING BARS ARE ENCOUNTERED DURING THE DRILLING OPERATION, THE HOLE SHALL BE RELOCATED TO CLEAR THE EXISTING REINFORCING. ABANDONED HOLE SHALL BE FILLED WITH CHEMICAL ANCHOR MATERIAL.
9. DEPTH AND DIAMETER OF THE DRILL HOLE FOR THE CHEMICAL ANCHORAGE TO BE AS REQUIRED BY THE CHEMICAL ADHESIVE MANUFACTURER TO DEVELOP THE FULL TENSILE STRENGTH OF THE BAR (8" MINIMUM DEPTH).

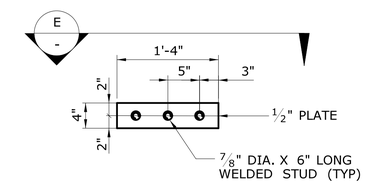

ELEVATION

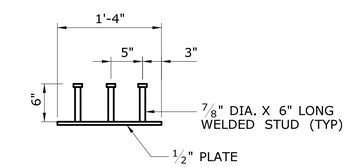

VIEW E

KEEPER PLATE DETAIL

SCALE: 1" = 1'-0"

REV.	DATE	REVISION DESCRIPTION	SHEET NO.

Plotted Date: 8/7/2019

DESIGNER/DRAFTER: DLW
CHECKED BY: SH
SCALE AS NOTED

STATE OF CONNECTICUT
DEPARTMENT OF TRANSPORTATION

Filename: ..\S_08_SB_MSH_Br00980B_0063_0712_KPR.dgn

SIGNATURE/BLOCK:

STATE OF CONNECTICUT · JOHN H. HARRIS · No. 14313 · LICENSED PROFESSIONAL ENGINEER

FUSS & O'NEILL
146 Hartford Road
Manchester, CT 06040
(860)646-2469

PROJECT TITLE:
REHABILITATION OF
BRIDGE NO. 00980B I-84 TR 826
OVER CONNECTICUT RIVER

TOWN: HARTFORD

DRAWING TITLE: KEEPER BLOCK DETAILS

PROJECT NO. 063-712
DRAWING NO. S-08
SHEET NO. 04.08

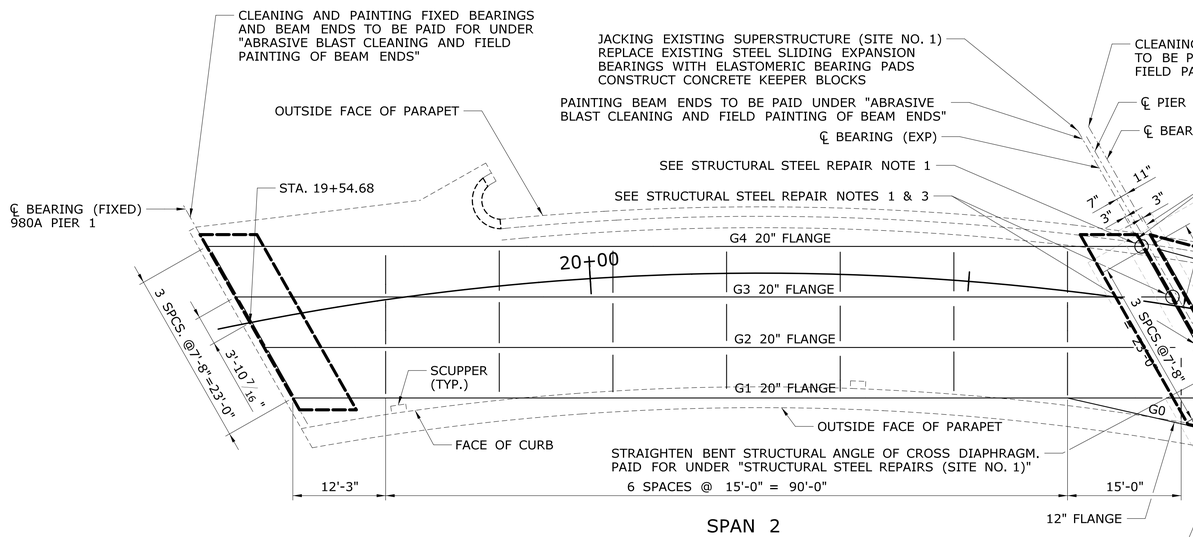

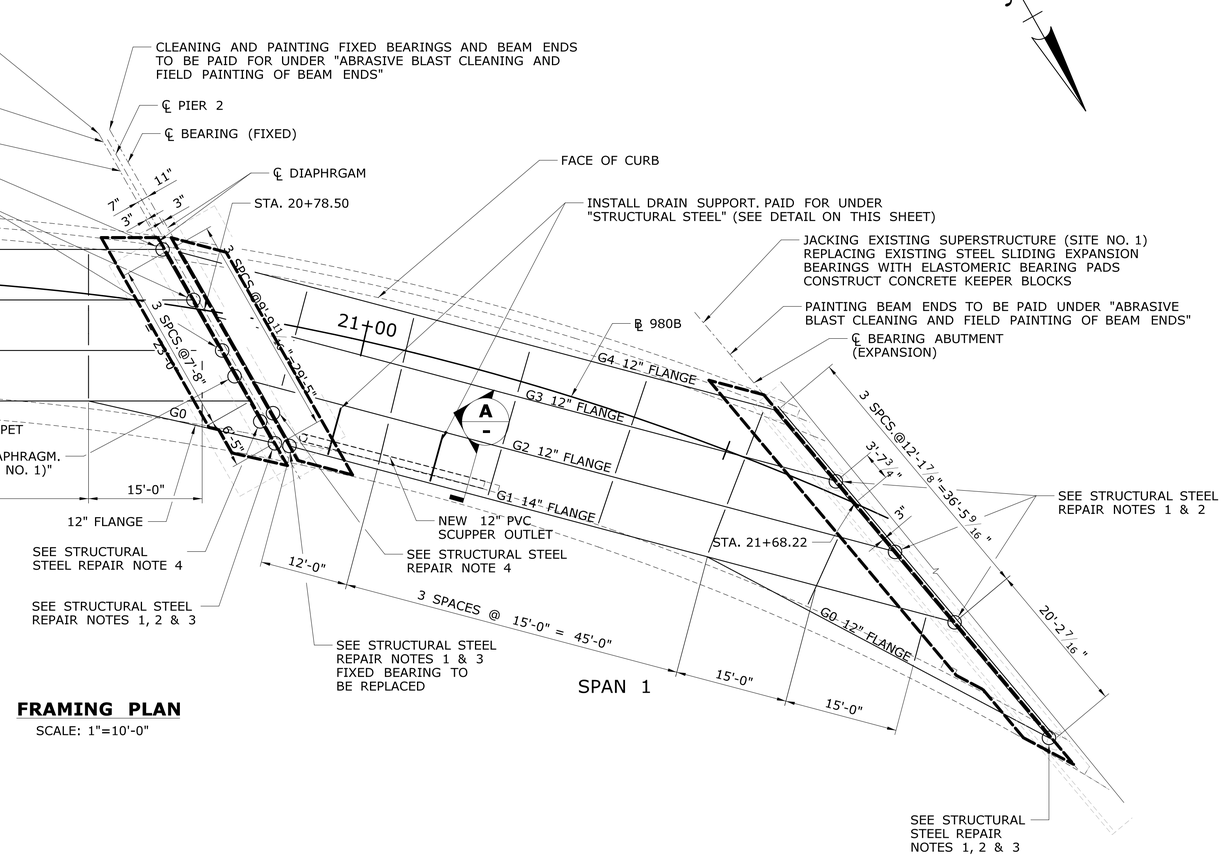

FRAMING PLAN

SCALE: 1"=10'-0"

PAINTING OF BEAM LEGEND:

DESIGNATES LIMITS FOR PAINTING OF BEAM ENDS 6FT INTO SPAN FROM END OF BEAM TO BE PAID UNDER "ABRASIVE BLAST CLEANING AND FIELD PAINTING OF BEAM ENDS" (SEE DETAILS ON SHEETS 10 AND 11)

STEEL REPAIR LEGEND:

1. LOCATION OF GIRDER WEB REPAIR. FOR DETAIL SEE REPAIR DETAIL 1, 2 & 3 ON DRAWING NO. S-10.
2. LOCATION OF GIRDER BOTTOM FLANGE REPAIR. FOR DETAIL SEE REPAIR DETAIL 4 ON DRAWING NO. S-11.
3. LOCATION OF BEARING STIFFENER REPLACEMENT. G-1, G-2, G-3 TO BE REPLACED WITH 9" x 5/8" STIFFENERS. G-0 TO BE REPLACED WITH 6" x 1/2" STIFFENERS. FOR MORE INFORMATION REFER TO EXISTING PLANS.
4. LOCATION OF DIAPHRAGM REPAIR. FOR DETAIL SEE DRAWING NO. S-11.

NOTE:

1. REPAIR LOCATIONS SHOWN ON THIS SHEET ARE BASED ON THE AI ENGINEERS, INC. INSPECTION DATED 11/19/2018.
2. FOR INFORMATION PERTAINING TO THE EXISTING STRUCTURE NOT SHOWN, USE ORIGINAL DESIGN DRAWING DATED 1961.

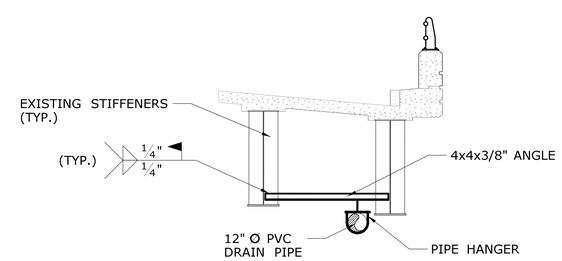

DRAIN SUPPORT

SECTION A

SCALE 1/4" = 1'-0"

REV.	DATE	REVISION DESCRIPTION	SHEET NO.

THE INFORMATION, INCLUDING ESTIMATED QUANTITIES OF WORK, SHOWN ON THESE SHEETS IS BASED ON LIMITED INVESTIGATIONS BY THE STATE AND IS IN NO WAY WARRANTED TO INDICATE THE CONDITIONS OF ACTUAL QUANTITIES OF WORK WHICH WILL BE REQUIRED.

Plotted Date: 8/7/2019

DESIGNER/DRAFTER: EH
CHECKED BY: AG
SCALE IN FEET 0 40 80
SCALE 1"=40'

STATE OF CONNECTICUT
DEPARTMENT OF TRANSPORTATION

Filename: ...\S..09..SB..MSH..Br00980B..0063..0712..FRM.dgn

SIGNATURE/BLOCK:
STATE OF CONNECTICUT LICENSED PROFESSIONAL ENGINEER No. 14313

FUSS & O'NEILL
146 Hartford Road
Manchester, CT 06040
(860)646-2469

PROJECT TITLE:
REHABILITATION OF BRIDGE NO. 00980B I-84 TR 826 OVER CONNECTICUT RIVER

TOWN: HARTFORD

DRAWING TITLE: FRAMING PLAN

PROJECT NO. 063-712
DRAWING NO. S-09
SHEET NO. 04.09

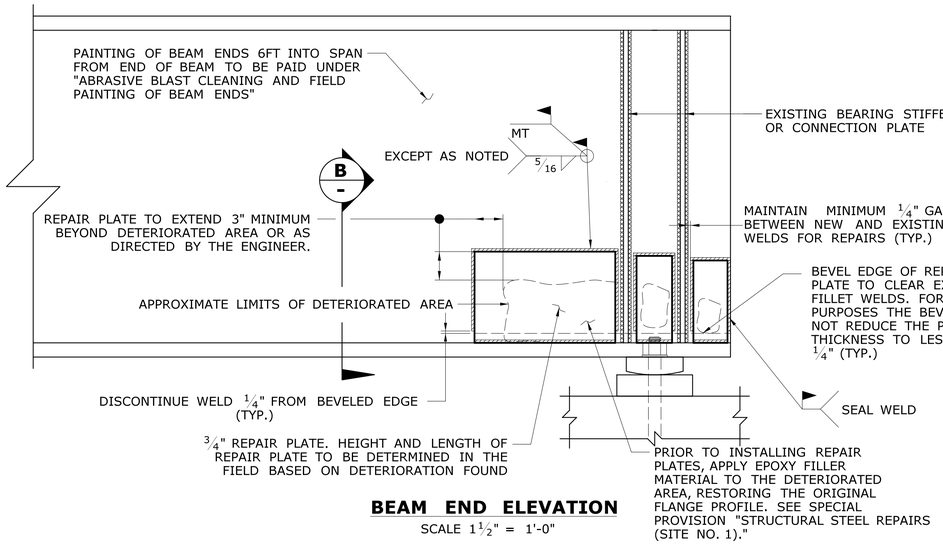

BEAM END ELEVATION

SCALE 1½" = 1'-0"

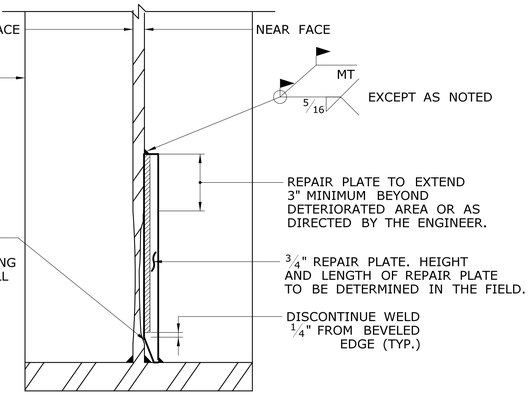

SECTION B -

SCALE 3" = 1'-0"

DETAIL 1
PARTIAL HEIGHT WEB REPAIR

REHABILITATION OF EXISTING STRUCTURAL STEEL NOTES

1. ALL STRUCTURAL STEEL REPAIR PLATES AND FASTENERS SHALL CONFORM TO FORM 817 SECTION M.06.
2. ALL STRUCTURAL STEEL REPAIR PLATES SHALL BE SMOOTH, FREE OF BURRS, NICKS, GOUGES, OIL, OR OTHER COATINGS.
3. WELDING DETAILS, PROCEDURES AND TESTING METHODS SHALL CONFORM TO THE ANSI/AASHTO/AWS D1.5 BRIDGE WELDING CODE, UNLESS OTHERWISE NOTED ON THE PLAN.
4. MAGNETIC PARTICLE OR ULTRASONIC INSPECTIONS OF ANY WELDS MADE PERFORMING STEEL REPIARS SHALL BE IN ACCORDANCE WITH AND IN THE AMOUNT OUTLINED IN THE SPECIAL PROVISION FOR "STRUCTURAL STEEL REPAIRS (SITE NO. 1)".
5. MULTIPLE PASS WELDS, INSPECTED BY THE MAGNETIC PARTICLE METHOD SHALL HAVE EACH PASS OR LAYER INSPECTED BEFORE PROCEEDING TO THE NEXT PASS OR LAYER, AS DETERMINED BY THE ENGINEER.
6. FURNISHING AND INSTALLING NEW STRUCTURAL STEEL REPAIR PLATES INCLUDING FASTENERS, EPOXY FILLER MATERIAL, ARC GOUGING, FLAME CUTTING, GRINDING AND WELDING SHALL BE PAID FOR UNDER THE ITEM "STRUCTURAL STEEL REPAIRS (SITE NO. 1)".

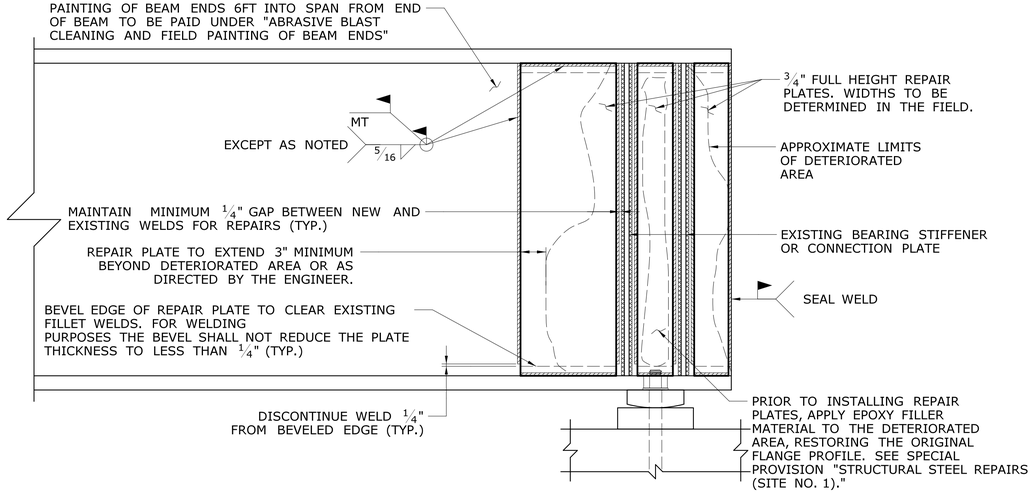

BEAM END ELEVATION

DETAIL 2
FULL HEIGHT WEB REPAIR

SCALE 1½" = 1'-0"

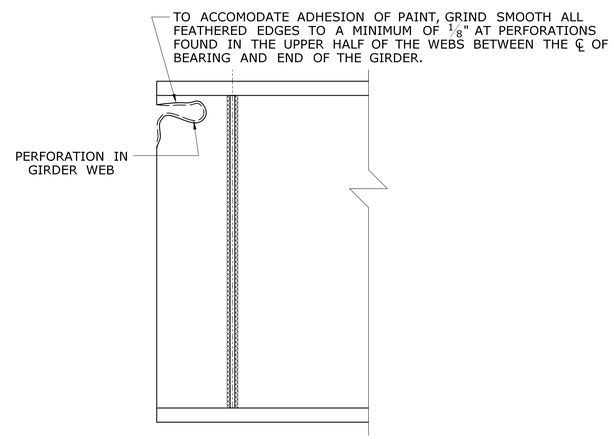

BEAM END ELEVATION

DETAIL 3
WEB PERFORATION REPAIR

SCALE 1½" = 1'-0"

GENERAL STEEL REPAIR NOTES

FOR PROPOSED LOCATIONS OF PLATING OVER DETERIORATED STEEL, SEE APPLICABLE BRIDGE FRAMING PLANS. AREAS OF SECTION LOSS ARE BASED ON INFORMATION PROVIDED IN THE AI ENGINEERS, INC. INSPECTION DATED 11/19/2018.

IN THE EVENT THAT ADDITIONAL DETERIORATION IS FOUND AT LOCATIONS OTHER THAN INDICATED ON THE FRAMING PLANS, THE FOLLOWING NOTES MAY BE USED FOR THE REPAIR GUIDELINES.

PAINT REMOVAL FOR STEEL REPAIRS WILL BE PAID FOR UNDER THE ITEM "ABRASIVE BLAST CLEANING AND FIELD PAINTING OF BEAM ENDS".

PAINT FOR BEAM ENDS SHALL BE COLORED BLUE - FEDERAL STANDARD 598, COLOR NO. 26329 TO BEST MATCH EXISTING STEEL.

WEBS & CONNECTION PLATES:

SECTION LOSS FOUND TO BE LESS THAN 25% AFTER PAINT REMOVAL SHALL ONLY BE RECOATED WITH THE APPROVED COATING SYSTEM.

SECTION LOSS FOUND TO BE GREATER THAN 25% BUT LESS THAN 50% ON ONE SIDE OF THE WEB AFTER PAINT REMOVAL SHALL HAVE A PLATE INSTALLED ON THE DETERIORATED SIDE ONLY AND THEN BE RECOATED WITH THE APPROVED COATING SYSTEM. DETERIORATION ON BOTH SIDES OF THE WEB MEETING THE ABOVE CRITERIA SHALL BE PLATED ON BOTH SIDES.

SECTION LOSS FOUND ON OPPOSING FACES OF STEEL WITH A CUMULATIVE SECTION LOSS GREATER THAN 25% BUT LESS THAN 50% AFTER PAINT REMOVAL SHALL HAVE A PLATE INSTALLED ON THE FACE WITH THE GREATER DEPTH OF SECTION LOSS THEN BE RECOATED WITH THE APPROVED COATING SYSTEM.

SECTION LOSS FOUND ON OPPOSING FACES OF STEEL WITH A CUMULATIVE SECTION LOSS GREATER THAN 50% AFTER PAINT REMOVAL SHALL HAVE BOTH FACES PLATED THEN BE RECOATED WITH THE APPROVED COATING SYSTEM.

SECTION LOSS GREATER THAN 50% OR PERFORATIONS SHALL BE PLATED ON BOTH SIDES OF THE WEB THEN BE RECOATED WITH THE APPROVED COATING SYSTEM. PERFORATIONS SHALL BE BROUGHT TO THE ATTENTION OF THE ENGINEER PRIOR TO REPAIRING.

REV.	DATE	REVISION DESCRIPTION	SHEET NO.

THE INFORMATION, INCLUDING ESTIMATED QUANTITIES OF WORK, SHOWN ON THESE SHEETS IS BASED ON LIMITED INVESTIGATIONS BY THE STATE AND IS IN NO WAY WARRANTED TO INDICATE THE CONDITIONS OF ACTUAL QUANTITIES OF WORK WHICH WILL BE REQUIRED.

Plotted Date: 8/7/2019

DESIGNER/DRAFTER: **EH**

CHECKED BY: **AG**

SCALE AS NOTED

STATE OF CONNECTICUT
DEPARTMENT OF TRANSPORTATION

Filename: ...\S_10_SB_MSH_Br00980B_0063_0712_STEEL_REPAIR_DETAILS1.dgn

SIGNATURE/BLOCK:

STATE OF CONNECTICUT — STUART H. HAMILTON — No. 14313 — LICENSED PROFESSIONAL ENGINEER

FUSS & O'NEILL
146 Hartford Road
Manchester, CT 06040
(860)646-2469

PROJECT TITLE:
REHABILITATION OF BRIDGE NO. 00980B I-84 TR 826 OVER CONNECTICUT RIVER

TOWN: **HARTFORD**

DRAWING TITLE: **STEEL REPAIR DETAILS - 1**

PROJECT NO. **063-712**

DRAWING NO. **S-10**

SHEET NO. **04.10**

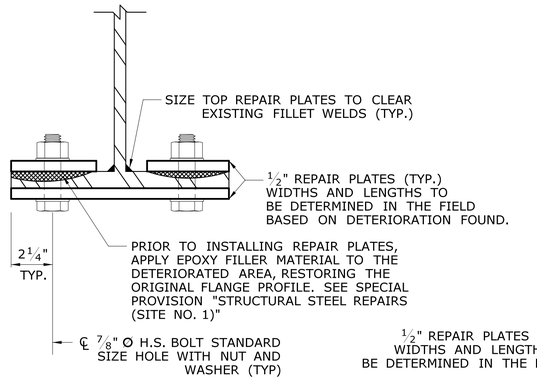

SECTION C
SCALE 3" = 1'-0"

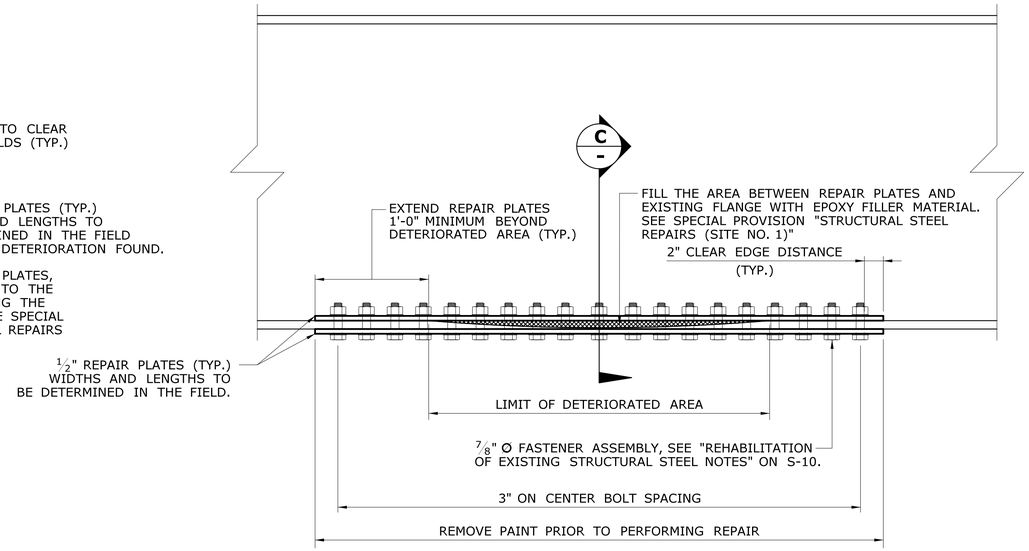

NOTE: LIVE LOADS SHALL NOT BE PRESENT ON THE GIRDER BEING REPAIRED DURING INSTALLATION OF BOTTOM FLANGE REPAIR PLATES.

BEAM ELEVATION
SCALE 1 1/2" = 1'-0"

DETAIL 4
BOTTOM FLANGE REPAIR

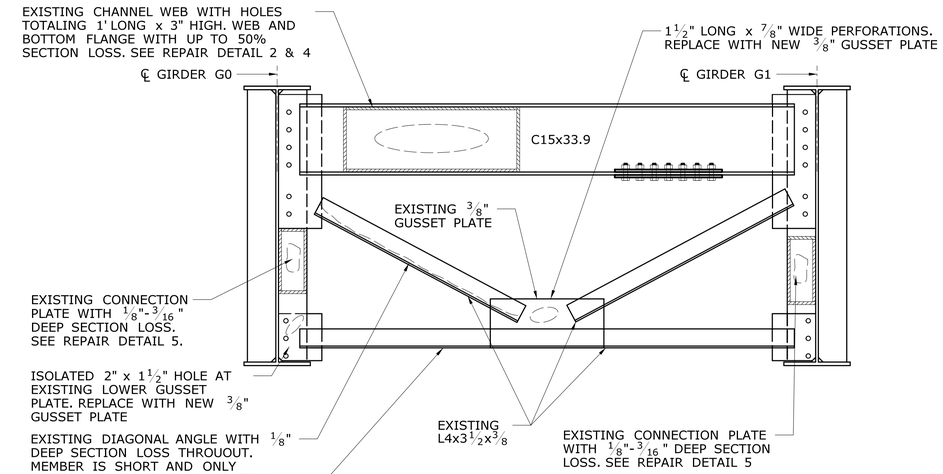

SPAN 2 END DIAPHRAM REPAIR
AT PIER (BAY G0-G1)
SCALE 3/4" = 1'-0"

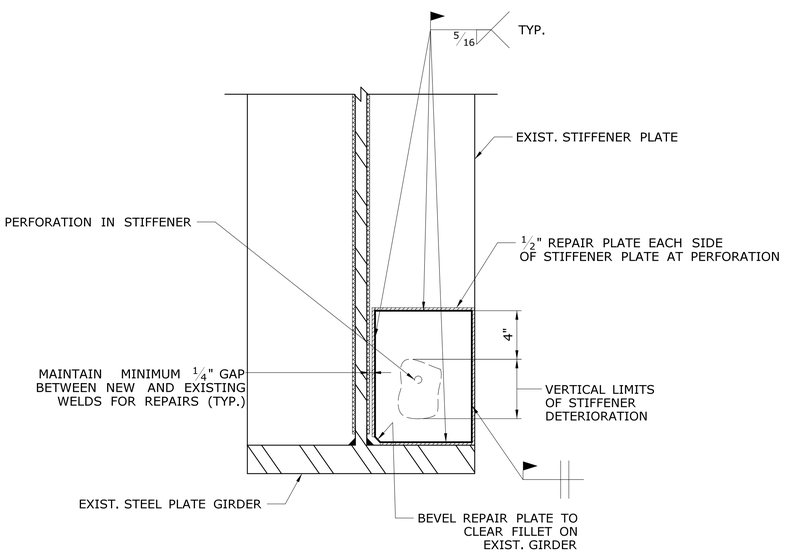

DETAIL 5
PARTIAL HEIGHT STIFFENER REPAIR
SCALE 1 1/2" = 1'-0"

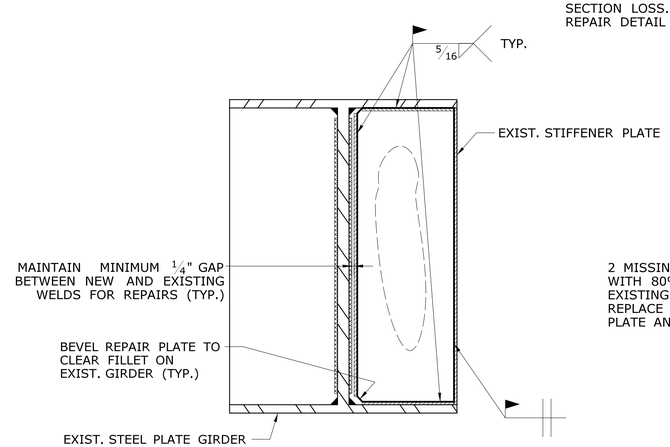

DETAIL 6
FULL HEIGHT STIFFENER REPAIR
SCALE 1 1/2" = 1'-0"

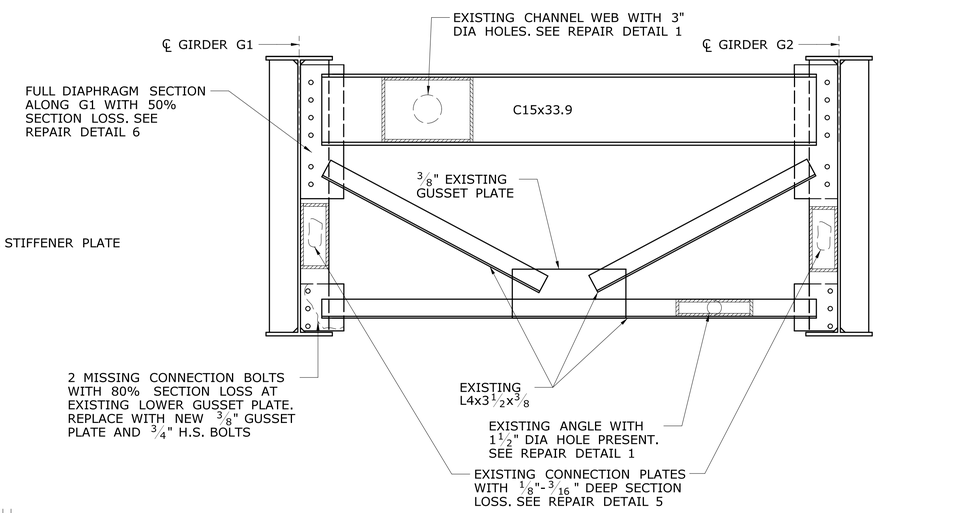

SPAN 1 END DIAPHRAM REPAIR
AT PIER (BAY G1-G2)
SCALE 3/4" = 1'-0"

STIFFENER REPAIR NOTES:

IF THE EXTENT OF DETERIORATION OF THE EXISTING STIFFENERS IS FOUND TO BE EXCESSIVE TO THE POINT THAT THESE REPAIRS ARE NOT FEASIBLE, THE STIFFENERS CAN BE REPLACED IN KIND ASS APPROVED BY THE ENGINEER. THE COST OF THIS REPLACEMENT WOULD BE UNDER "STRUCTURAL STEEL REPAIRS (SITE NO. 1)

GENERAL NOTES

SEE DRAWING NO. S-10 FOR NOTES ON REHABILITATION OF EXISTING STRUCTURAL STEEL AND GENERAL STEEL REPAIR.

REV.	DATE	REVISION DESCRIPTION	SHEET NO.

THE INFORMATION, INCLUDING ESTIMATED QUANTITIES OF WORK, SHOWN ON THESE SHEETS IS BASED ON LIMITED INVESTIGATIONS BY THE STATE AND IS IN NO WAY WARRANTED TO INDICATE THE CONDITIONS OF ACTUAL QUANTITIES OF WORK WHICH WILL BE REQUIRED.

Plotted Date: 8/7/2019

DESIGNER/DRAFTER: EH
CHECKED BY: AG
SCALE AS NOTED

STATE OF CONNECTICUT
DEPARTMENT OF TRANSPORTATION

Filename: ...\S_11_SB_MSH_Br00980B_0063_0712_STEEL_REPAIR_DETAILS2.dgn

SIGNATURE/BLOCK:
STATE OF CONNECTICUT — GARY H. HAWKINS — No. 14313 — LICENSED PROFESSIONAL ENGINEER

FUSS & O'NEILL
146 Hartford Road
Manchester, CT 06040
(860)646-2469

PROJECT TITLE:
REHABILITATION OF BRIDGE NO. 00980B I-84 TR 826 OVER CONNECTICUT RIVER

TOWN: **HARTFORD**

DRAWING TITLE: **STEEL REPAIR DETAILS - 2**

PROJECT NO. **063-712**
DRAWING NO. **S-11**
SHEET NO. **04.11**

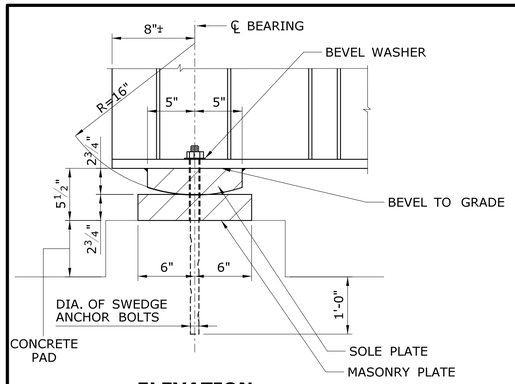

ELEVATION

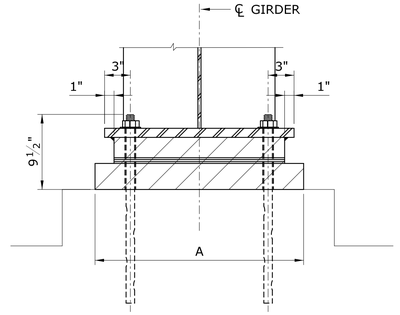

SECTION

CLEAN AND PAINT FIXED BEARINGS

SCALE: 1 1/2"=1'

LIMITS OF CLEANING AND PAINTING OF FIXED BEARINGS TO BE PAID FOR UNDER "ABRASIVE BLAST CLEANING AND FIELD PAINTING OF BEAM ENDS"

FLANGE WIDTH	A	B	BOLT DIA.	SLOTTED HOLES (EXPAN. ONLY)
12"	1'-2"	10"	1¼"	2¾" x 1⅝"
14"	1'-4"	1'-0"	1¼"	2¾" x 1⅝"
20"	1'-10"	1'-6"	1½"	3¼" x 1⅞"

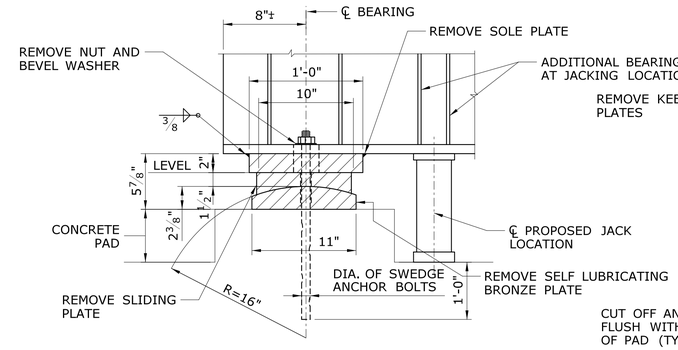

ELEVATION

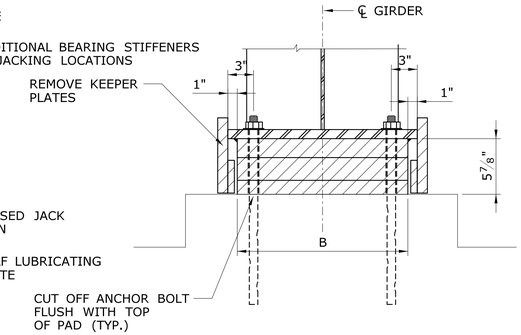

SECTION

REMOVAL OF EXISTING EXPANSION BEARINGS

SCALE: 1 1/2"=1'

JACKING NOTES

1. JACKING GIRDERS REQUIRED FOR EXPANSION OR FIXED BEARING REPLACMENT. JACKING IS NOT REQUIRED FOR FIXED BEARING PAINTING.

2. PERFORM GIRDER/STIFFENER/DIAPHRAGM REPAIR PRIOR TO BEAM JACKING FOR BEARING REPLACEMENT.

3. JACKING IS TO BE ACCOMPLISHED BY THE LOADING AS SHOWN IN THE JACKING DATA TABLE ON THIS SHEET.

4. ADD BEARING STIFFENERS AT JACKING LOCATIONS ONLY IF REQUIRED BY ANALYSIS.

5. JACKING OF BEAMS SHALL BE PAID FOR UNDER THE ITEM "JACKING EXISTING SUPERSTRUCTURE (SITE NO. 1)".

6. DO NOT CLEAN/PAINT EXISTING FIXED BEARING G1 IN SPAN 1, SEE REPLACEMENT DETAIL THIS SHEET.

JACKING LOADS
ALL GIRDERS SIMULTANEOUS

	PIER 2, SPAN 2			PIER 2, SPAN 1			ABUTMENT		
	DL	LL+I	150% LL+I	DL	LL+I	150% LL+I	DL	LL+I	150% LL+I
G0	37.6	12.1	18.2				39.5	17.6	26.4
G1	83.4	42.9	64.4	96.1	71.4	107.1	78.2	62.6	93.9
G2	92.5	78.2	117.3				41.6	52.7	79.1
G3	90.6	62.9	94.4				71.3	75.0	112.5
G4	123.5	131.1	196.7				66.0	116.7	175.1

* ALL VALUES IN KIP

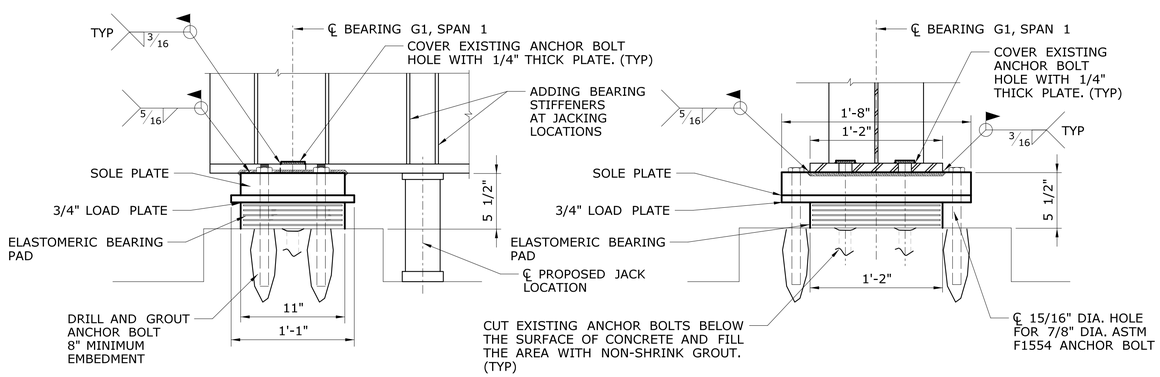

G1, SPAN 1 FIXED BEARING REPLACEMENT

SCALE: 1 1/2"=1'

FIXED BEARING REPLACEMENT NOTES:

1) SEE S-13 FOR ELASTOMERIC PAD DETAILS AND ELASTOMERIC BEARING PAD NOTES.
2) DURING JACKING OF GIRDER G1, ENSURE THAT THE BOLTED CONNECTION OF GIRDER G0 IN SPAN 1 DOES NOT SHOW SIGNS OF OVERSTRESS. MEASURE EXISTING CONNECTION PLATE CRACK AT G0 BOLTED CONNECTION BEFORE AND AFTER THE JACKING OPERATION.

REV.	DATE	REVISION DESCRIPTION	SHEET NO.

Plotted Date: 8/7/2019

DESIGNER/DRAFTER: DLW
CHECKED BY: SH
SCALE AS NOTED

STATE OF CONNECTICUT
DEPARTMENT OF TRANSPORTATION

Filename: ...\S_12_SB_MSH_Br00980B_0063_0712_BRG.dgn

SIGNATURE/BLOCK:
STATE OF CONNECTICUT STUART H. HAMILTON No. 14313 LICENSED PROFESSIONAL ENGINEER

FUSS & O'NEILL
146 Hartford Road
Manchester, CT 06040
(860)646-2469

PROJECT TITLE:
REHABILITATION OF
BRIDGE NO. 00980B I-84 TR 826
OVER CONNECTICUT RIVER

TOWN: HARTFORD

DRAWING TITLE: EXPANSION AND FIXED BEARINGS

PROJECT NO. 063-712
DRAWING NO. S-12
SHEET NO. 04.12

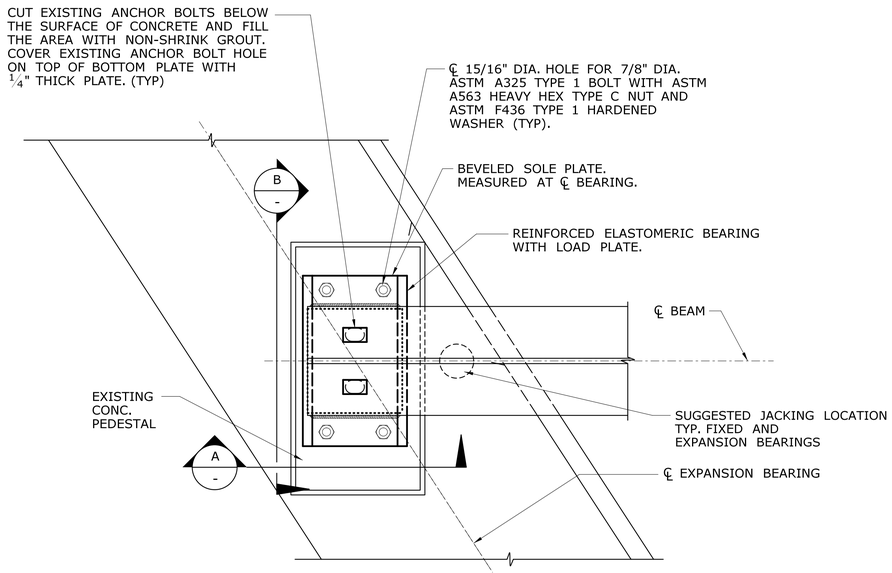

PLAN
SCALE: 1½" = 1'-0"

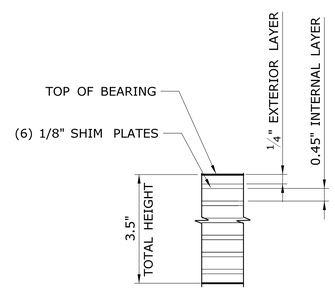

TYPICAL ELASTOMERIC SECTION
SCALE: 6"=1'

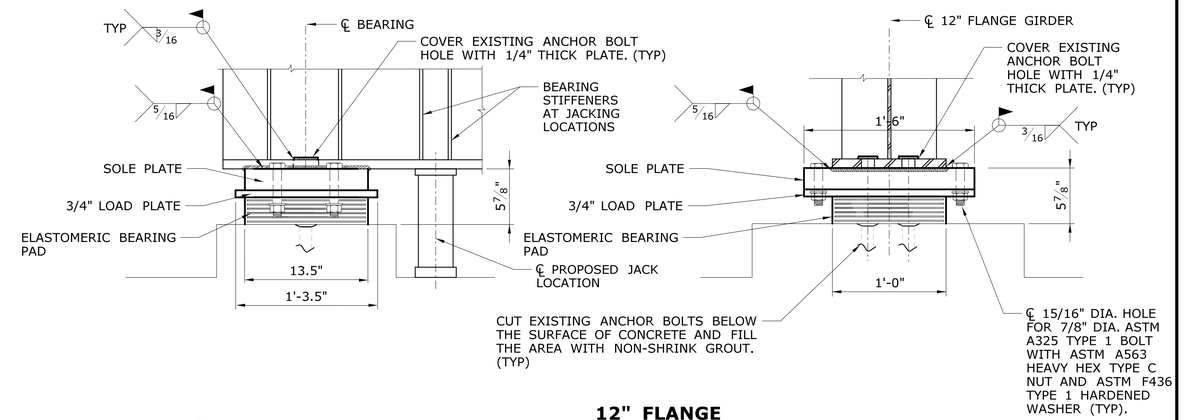

12" FLANGE
SCALE: 1 1/2"=1'

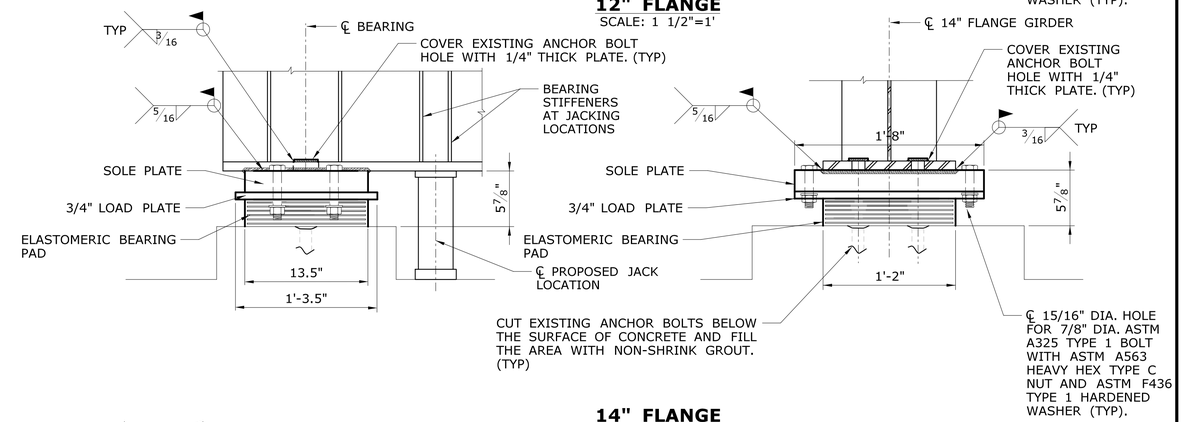

14" FLANGE
SCALE: 1 1/2"=1'

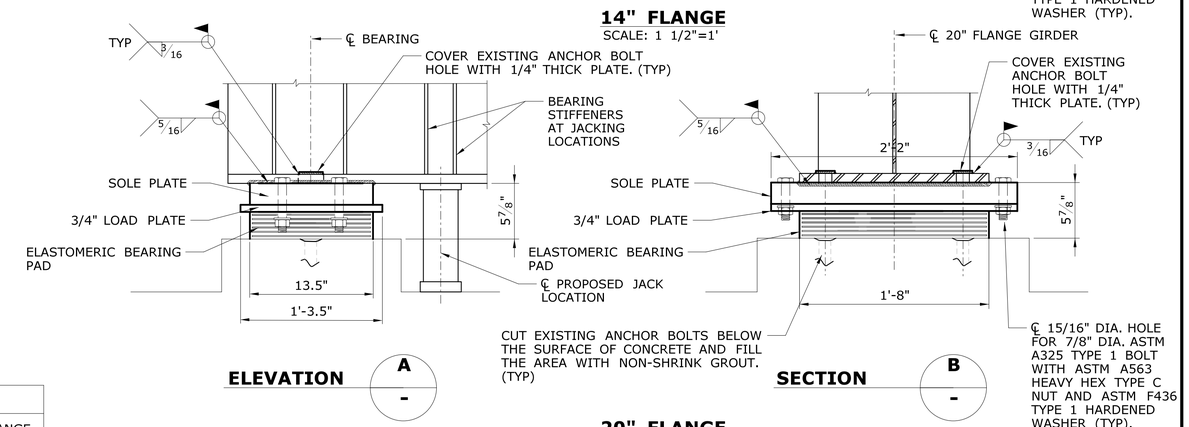

ELEVATION A -

SECTION B -

20" FLANGE
SCALE: 1 1/2"=1'

ELASTOMERIC BEARING PAD NOTES

1. THE ELASTOMERIC BEARINGS ARE DESIGNED USING METHOD A OF THE AASHTO LRFD BRIDGE DESIGN SPECIFICATIONS.
2. THE CONTRACTOR SHALL MEASURE THE GRADE OF THE EXISTING BEAMS OR SOLE PLATES TO ACCURATELY PRODUCE NEW BEVELED SOLE PLATES. THE BOTTOM SURFACE OF THE NEW SOLE PLATE SHALL BE LEVEL AFTER INSTALLATION.
3. THE ELASTOMER SHALL CONTAIN ONLY VIRGIN POLYCHLOROPRENE (NEOPRENE) AS THE RAW POLYMER. ALL BEARINGS SHALL USE AN ELASTOMER HARDNESS OF 60 DUROMETER EXCEPT FOR THE 20" FLANGE BEARINGS WHICH SHALL USE A 50 DUROMETER HARDNESS.
4. THE INTERNAL STEEL LAMINAE SHALL CONFORM TO ASTM A1011, GRADE 36.
5. THE STEEL FOR THE LOAD PLATES AND BEVELED SOLE PLATES SHALL CONFORM TO THE REQUIREMENTS OF AASHTO M270, GRADE 36. THE FURNISHING AND INSTALLING OF SOLE PLATES AND LOAD PLATES SHALL BE INCLUDED FOR PAYMENT UNDER THE ITEM "BEARING REPLACEMENT WITH ELASTOMERIC BEARING PADS".
6. THE LOAD PLATE SHALL BE HOT BONDED TO THE ELASTOMERIC BEARING DURING VULCANIZATION.
7. WELDING DETAILS, PROCEDURES AND TESTING METHODS SHALL CONFORM TO THE ANSI/AASHTO/AWS D1.5:2008 - BRIDGE WELDING CODE, UNLESS OTHERWISE NOTED ON THE PLANS
8. THE EXPOSED SURFACES OF THE ELASTOMER SHALL NOT BE PAINTED.
9. ALL HIGH STRENGTH BOLTS SHALL CONFORM TO ASTM F3125 GRADE A325. ALL HEX NUTS SHALL CONFORM TO ASTM A563 HEAVY HEX TYPE C. ALL CIRCULAR HARDENED WASHERS SHALL CONFORM TO ASTM F436 TYPE 1.
10. THE ELASTOMERIC BEARING SHALL BE INSTALLED WHEN THE AMBIENT TEMPERATURE IS BETWEEN 40° F AND 80° F AND HAS BEEN WITHIN THIS RANGE FOR AT LEAST TWO HOURS.
11. JACKING OF BEAMS FOR REPLACING BEARINGS SHALL BE PAID FOR UNDER THE ITEM "JACKING EXISTING SUPERSTRUCTURE (SITE NO. 1)"
12. THE FURNISHING AND WELDING OF STEEL PLATES OVER SLOTTED HOLES IN EXISTING STEEL WHERE ANCHOR BOLTS HAVE BEEN REMOVED FOR BEARING REPLACEMENT SHALL BE PAID FOR UNDER THE ITEM "BEARING REPLACEMENT WITH ELASTOMERIC BEARING PADS."

BEARING DESIGN LOAD TABLE

	20" FLANGE	14" FLANGE	12" FLANGE
SERVICE DEAD LOAD (KIPS)	188 KIPS	78 KIPS	72 KIPS
SERVICE LIVE LOAD (KIPS)	131 KIPS	63 KIPS	117 KIPS

REV.	DATE	REVISION DESCRIPTION	SHEET NO.

Plotted Date: 8/7/2019

DESIGNER/DRAFTER: DLW
CHECKED BY: SH
SCALE AS NOTED

STATE OF CONNECTICUT
DEPARTMENT OF TRANSPORTATION

Filename: ...\S_13_SB_MSH_Br00980B_0063_0712_BRG2.dgn

SIGNATURE/BLOCK:
STATE OF CONNECTICUT · JERRY H. HANSON · No. 14313 · LICENSED PROFESSIONAL ENGINEER

FUSS & O'NEILL
146 Hartford Road
Manchester, CT 06040
(860)646-2469

PROJECT TITLE:
REHABILITATION OF BRIDGE NO. 00980B I-84 TR 826 OVER CONNECTICUT RIVER

TOWN: **HARTFORD**

DRAWING TITLE: **EXPANSION BEARING REPLACEMENT**

PROJECT NO. 063-712
DRAWING NO. S-13
SHEET NO. 04.13

LEGEND

SPALL AREA

SPALL AREA W/ EXPOSED REBAR

HONEY COMB AREA

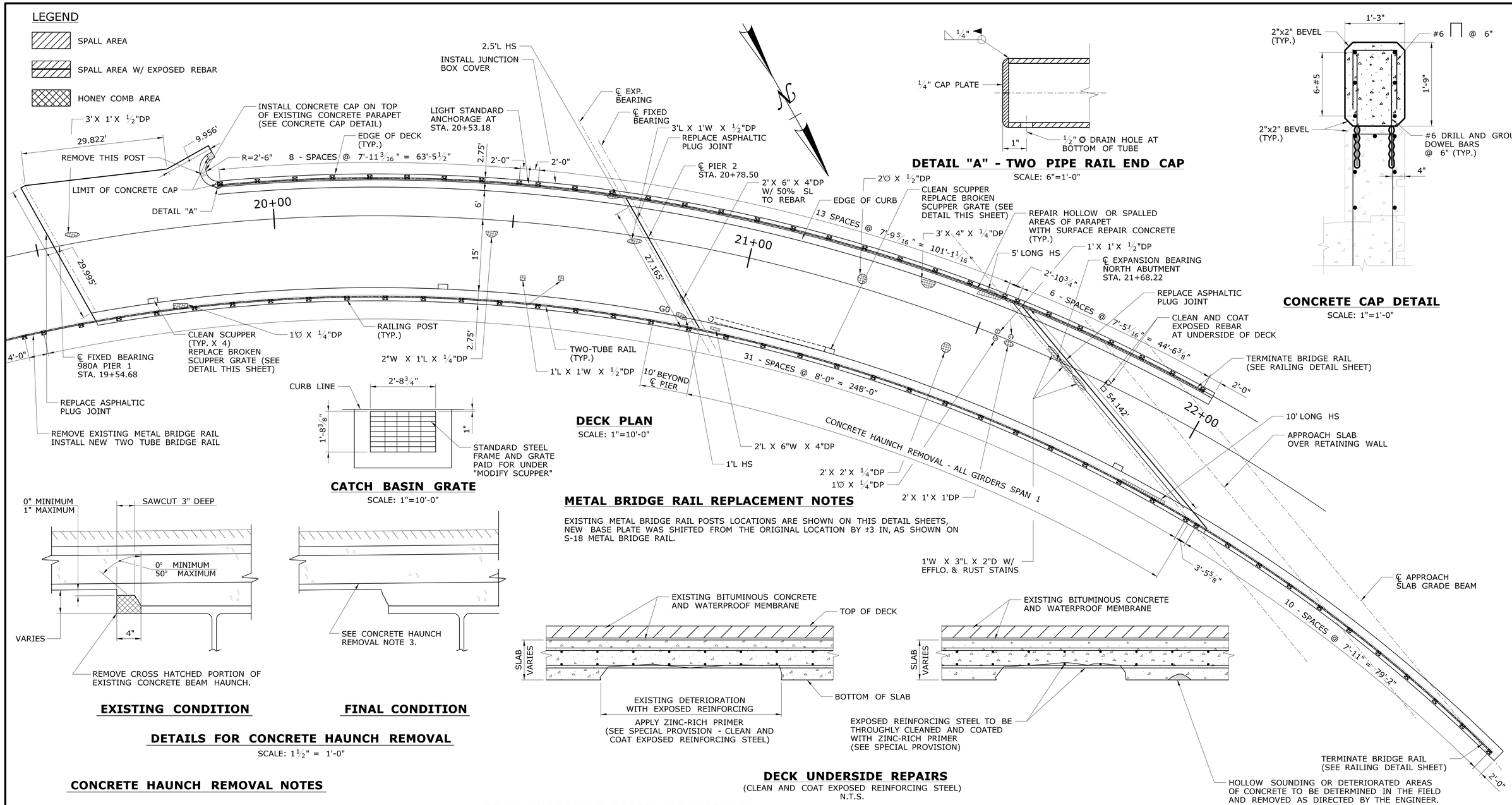

DECK PLAN

SCALE: 1"=10'-0"

DETAIL "A" - TWO PIPE RAIL END CAP

SCALE: 6"=1'-0"

CONCRETE CAP DETAIL

SCALE: 1"=1'-0"

CATCH BASIN GRATE

SCALE: 1"=10'-0"

METAL BRIDGE RAIL REPLACEMENT NOTES

EXISTING METAL BRIDGE RAIL POSTS LOCATIONS ARE SHOWN ON THIS DETAIL SHEETS, NEW BASE PLATE WAS SHIFTED FROM THE ORIGINAL LOCATION BY ±3 IN, AS SHOWN ON S-18 METAL BRIDGE RAIL.

EXISTING CONDITION

FINAL CONDITION

DETAILS FOR CONCRETE HAUNCH REMOVAL

SCALE: 1½" = 1'-0"

DECK UNDERSIDE REPAIRS

(CLEAN AND COAT EXPOSED REINFORCING STEEL)
N.T.S.

CONCRETE HAUNCH REMOVAL NOTES

1. DEBRIS SHIELD TO BE INSTALLED PRIOR TO CONCRETE HAUCH REMOVAL. SEE PROSECUTION AND PROGRESS.
2. REMOVE CONCRETE HAUNCH FOR ALL GIRDERS AT SPAN 1 OR AS DIRECTED BY THE ENGINEER.
3. THE REMOVAL OF THE PORTION OF CONCRETE HAUNCH SHOWN SHALL BE PAID FOR UNDER THE ITEM "CONCRETE HAUNCH REMOVAL".
4. IN THE EVENT OF CONCRETE OVER-REMOVAL EXPOSES ADDITIONAL REINFORCING, APPLY TWO COATS OF ZINC-RICH PRIMER TO ADDITIONAL DECK REINFORCING STEEL EXPOSED. ALL REASONABLE PRECAUTIONS SHALL BE TAKEN TO AVOID THIS CONDITION.

DECK UNDERSIDE REPAIR PROCEDURE

1. REMOVE DETERIORATED CONCRETE TO SOUND CONCRETE TO THE LIMITS SHOWN ON THE PLANS OR AS DIRECTED BY THE ENGINEER BY HAND TOOLS OR PNEUMATIC HAMMERS NOT TO EXCEED 15 POUNDS AND ACCORDING TO THE SPECIAL PROVISIONS.
2. PRESERVE EXPOSED REINFORCING STEEL, IF ANY. WIRE BRUSH THE REBAR TO SSPC-SP3 POWER TOOL REQUIREMENT.
3. CLEAN THE SOUND CONCRETE SURFACE AREA AND EXPOSED REINFORCING STEEL OF ALL LOOSE OR POWDER-LIKE RUST, OIL, DIRT, LOOSE PARTICLES, AND OTHER BOND-INHIBITTING MATTER BY ANY APPROVED METHOD.
4. COAT THE EXPOSED REINFORCING STEEL WITH ZINC-RICH PRIMER ACCORDING TO THE SPECIAL PROVISIONS.

ASPHALTIC PLUG JOINT NOTES:

SEE SHEET S-15 FOR DETAILS

REV.	DATE	REVISION DESCRIPTION	SHEET NO.

Plotted Date: 8/7/2019

DESIGNER/DRAFTER: DLW
CHECKED BY: SH
SCALE AS NOTED

STATE OF CONNECTICUT
DEPARTMENT OF TRANSPORTATION

Filename: ...\S_14_SB_MSH_Br00980B_0063_0712_DCK.dgn

SIGNATURE/BLOCK:

STATE OF CONNECTICUT · STUART H. HARRIS · No. 14313 · LICENSED PROFESSIONAL ENGINEER

FUSS & O'NEILL
146 Hartford Road
Manchester, CT 06040
(860)646-2469

PROJECT TITLE:
REHABILITATION OF
BRIDGE NO. 00980B I-84 TR 826
OVER CONNECTICUT RIVER

TOWN: HARTFORD

DRAWING TITLE: DECK PLAN

PROJECT NO. 063-712
DRAWING NO. S-14
SHEET NO. 04.14

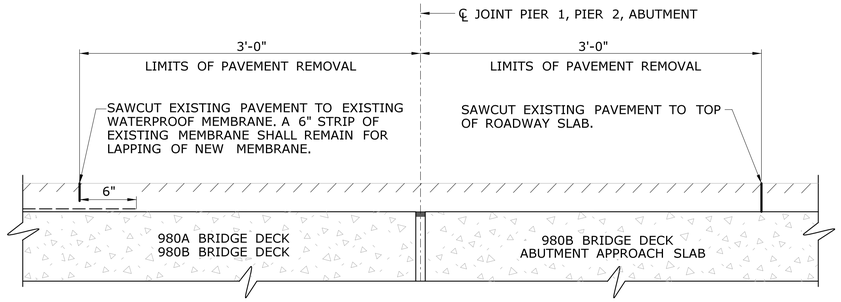

EXISTING JOINT REMOVAL

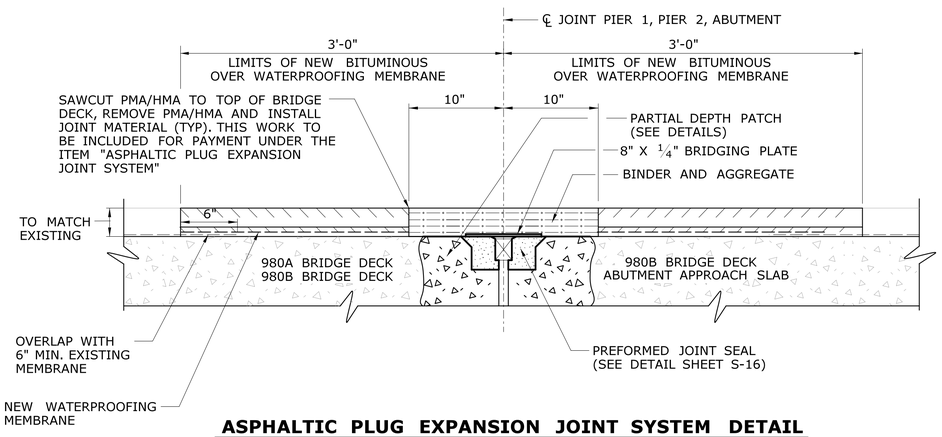

ASPHALTIC PLUG EXPANSION JOINT SYSTEM DETAIL

SCALE: 1½" = 1'-0"

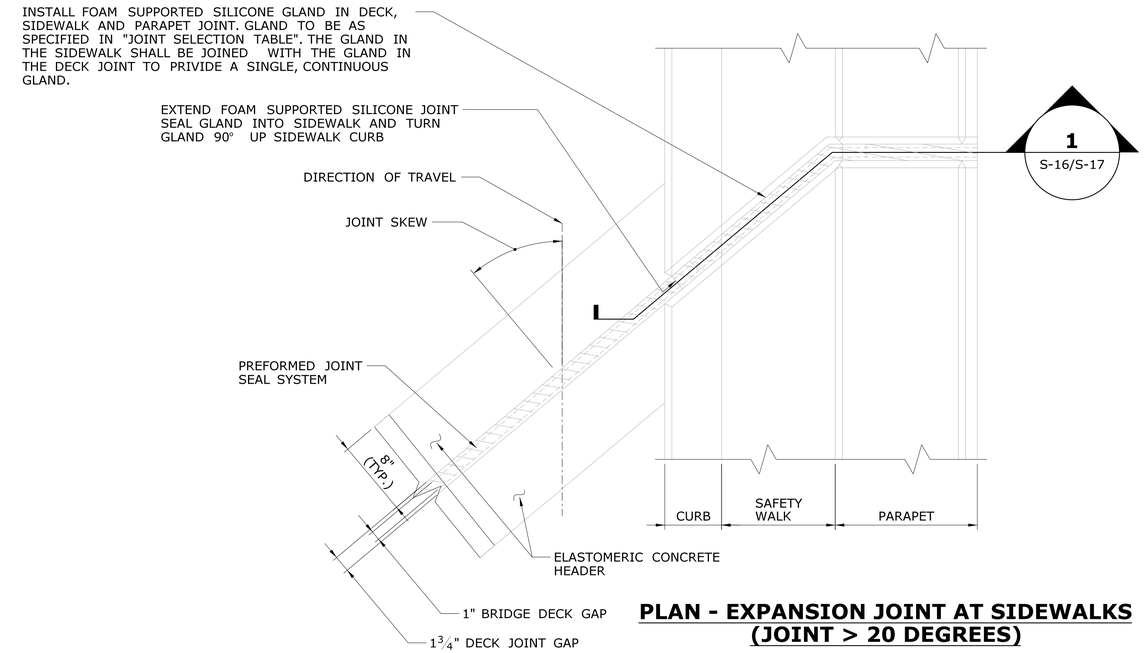

PLAN - EXPANSION JOINT AT SIDEWALKS (JOINT > 20 DEGREES)

SCALE: 1½" = 1'-0"

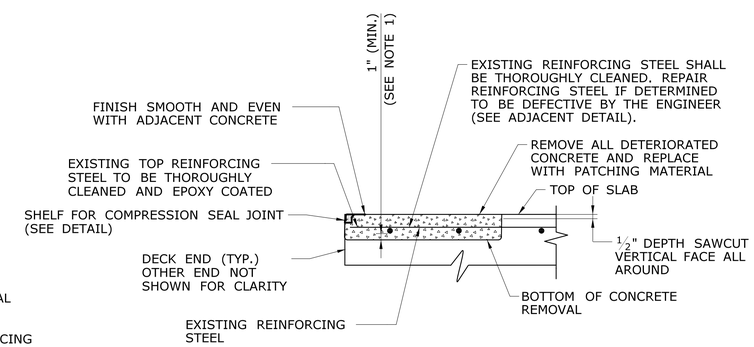

PARTIAL DEPTH PATCH REPAIR DETAIL

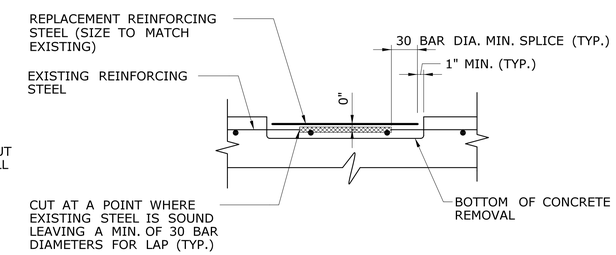

REPAIR OF DEFECTIVE REINFORCING STEEL

PARTIAL DEPTH PATCH

NOT TO SCALE

ASPHALTIC PLUG EXPANSION JOINT SYSTEM NOTES:

1. REMOVE THE EXISTING JOINT MATERIAL DURING MILLING OF EXISTING OVERLAY. THE REMOVAL OF ALL EXISTING JOINT MATERIAL TO BE INCLUDED FOR PAYMENT UNDER THE ITEM "ASPHALTIC PLUG EXPANSION JOINT SYSTEM", SEE SPECIAL PROVISIONS.
2. TEMPORARY BACKER ROD TO BE INSTALLED INTO THE JOINT AFTER REMOVAL OF EXISTING JOINT MATERIAL AND PRIOR TO PLACING NEW OVERLAY.
3. PORTION OF TOP OF SLAB TO RECEIVE NEW JONT MATERIAL TO BE MASKED OFF PRIOR TO APPLICATION OF MEMBRANE WATERPROOFING.
4. SAWCUT NEW OVERLAY AND INSTALL NEW JOINT. SAW CUTTING AND REMOVAL OF PAVEMENT FOR THE ASPHALTIC PLUG JOINT INSTALLATION TO BE INCLUDED FOR PAYMENT UNDER THE ITEM "ASPHALTIC PLUG EXPANSION JOINT SYSTEM".
5. CLOSED CELL BACKER ROD DIAMETER SHALL BE DETERMINED AFTER MEASURING THE JOINT OPENING.
6. PREFORMED JOINT SEAL INSTALLED IN THE PARAPETS SHALL BE PLACED ON THE BACKER ROD. THE PREFORMED JOINT SHALL BE PLACED FLUSH WITH THE OUTSIDE FACE OF CONCRETE AT THE GUTTER.
7. PRIOR TO INSTALLING THE BACKER ROD AND PREFORMED JOINT SEAL, CLEAN THE SIDES OF THE JOINT BY SANDBLASTING. DUST SHALL BE REMOVED BY THE METHOD APPROVED BY THE ENGINEER. THIS WORK SHALL BE INCLUDED FOR PAYMENT UNDER THE ITEM "ASPHALTIC PLUG EXPANSION JOINT SYSTEM".
8. THE COST OF REPAIRING THE ENDS OF SLABS WITHIN THE LIMITS OF THE PROPOSED JOINT SHALL BE INCLUDED FOR PAYMENT UNDER THE ITEM " PARTIAL DEPTH PATCH", SEE SPECIAL PROVISIONS AND DETAILS.
9. THE INSTALLATION OF THE PREFORMED JOINT SEAL SHALL BE PAID UNDER "PREFORMED JOINT SEAL".
10. THE DESIGNED DECK JOINT THERMAL MOVEMENT RANGE = 0" - 1".
11. SEE SHEET S14 FOR LIMITS OF WORK

PARTIAL DEPTH PATCH REPAIR NOTES

1. THE CONCRETE SHALL BE REMOVED TO A DEPTH OF 1" BELOW THE REINFORCING STEEL AND THE EXPOSED REINFORCEMENT SHALL BE CLEANED (SEE SPECIAL PROVISIONS) BEFORE PLACING "PARTIAL DEPTH PATCH" MATERIAL.
2. THE REMOVAL OF DEFECTIVE AND DETERIORATED REINFORCING STEEL AND THE FURNISHING AND INSTALLING OF NEW ASTM A615, GRADE 60 REINFORCING SHALL BE PAID FOR UNDER THE ITEM "PARTIAL DEPTH PATCH". MINIMUM LENGTH OF SPLICE SHALL BE 30 BAR DIAMETERS. MECHANICAL SPLICES MAY BE USED IF AUTHORIZED BY THE ENGINEER.
3. COST OF ADDITIONAL CONCRETE REMOVAL REQUIRED FOR THE REPAIR OF THE REINFORCING STEEL SHALL BE PAID UNDER THE ITEM "PARTIAL DEPTH PATCH".

REV.	DATE	REVISION DESCRIPTION	SHEET NO.

THE INFORMATION, INCLUDING ESTIMATED QUANTITIES OF WORK, SHOWN ON THESE SHEETS IS BASED ON LIMITED INVESTIGATIONS BY THE STATE AND IS IN NO WAY WARRANTED TO INDICATE THE CONDITIONS OF ACTUAL QUANTITIES OF WORK WHICH WILL BE REQUIRED.

Plotted Date: 8/7/2019

DESIGNER/DRAFTER: DLW
CHECKED BY: SH
SCALE AS NOTED

STATE OF CONNECTICUT
DEPARTMENT OF TRANSPORTATION

Filename: ...\S_15_SB_MSH_BR00980B_0063_0712_JNT1.dgn

SIGNATURE/BLOCK:
STATE OF CONNECTICUT · STUART H. HARRIS · No. 14313 · LICENSED PROFESSIONAL ENGINEER

FUSS & O'NEILL
146 Hartford Road
Manchester, CT 06040
(860)646-2469

PROJECT TITLE:
REHABILITATION OF BRIDGE NO. 00980B I-84 TR 826 OVER CONNECTICUT RIVER

TOWN: HARTFORD

DRAWING TITLE:
ASPHALTIC PLUG JOINT AND DECK END REPAIRS

PROJECT NO. 063-712
DRAWING NO. S-15
SHEET NO. 04.15

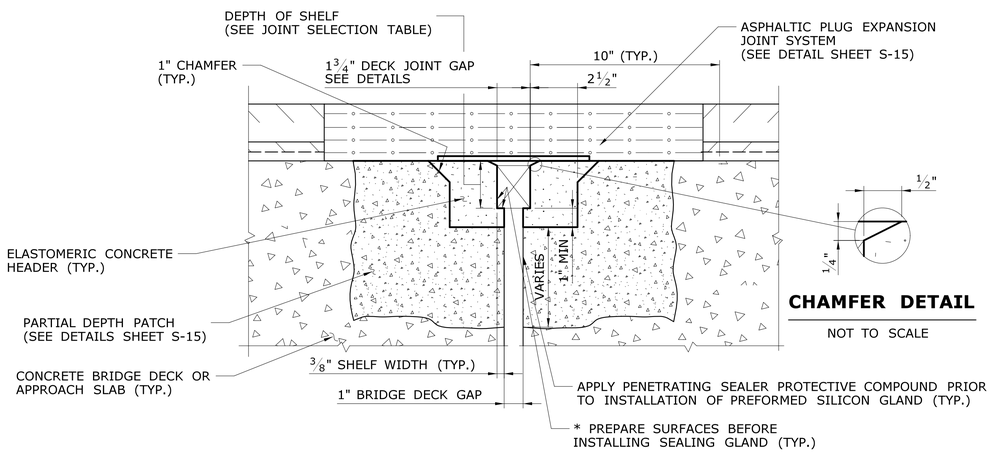

PREFORMED JOINT SEAL DETAIL

SCALE: 3" = 1'- 0"

CHAMFER DETAIL

NOT TO SCALE

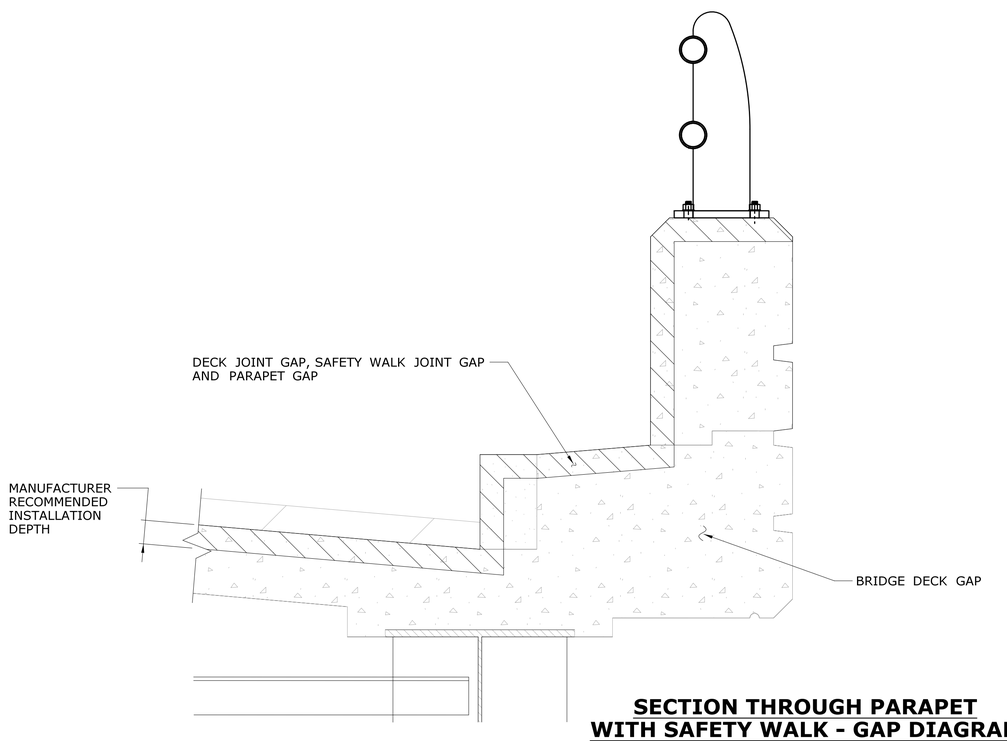

SECTION THROUGH PARAPET WITH SAFETY WALK - GAP DIAGRAM

SCALE: 1 1/2" = 1'-0"

1

S-15

JOINT SELECTION TABLE

DESCRIPTION OF JOINT LOCATION: SPAN 2 - BUCKELEY BRIDGE

THERMAL MOVEMENT RANGE: 0.0000 INCHES

PRODUCT		NOMINAL MOVEMENT CAPACITY	MFR. RECOMMENDED MINIMUM DECK JOINT GAP J MIN, AT 110° F (IN)	WIDTH OF SHELF (IN)	MIN. BRIDGE DECK GAP AT 110° F (IN) "G"	DECK JOINT GAP, "J", AT INSTALLATION (IN.)					DEPTH OF SHELF (IN.)
						40° F	50° F	60° F	70° F	80° F	
DECK EXPANSION JOINT											
SKEW = 29.5894°											
EMSEAL	BEJS 0175	-------	0.6875	0.375	1.0000	1.750	1.750	1.750	1.750	1.750	2.5
WABO-FS	FS-175	-------	0.70	0.375	1.0000	1.750	1.750	1.750	1.750	1.750	2.5

NOTE: BRIDGE DECK GAP, G = J - 2 * (WIDTH OF SHELF)

JOINT SELECTION TABLE

DESCRIPTION OF JOINT LOCATION: SPAN 2 - PIER 2

THERMAL MOVEMENT RANGE: 0.9118 INCHES

PRODUCT		NOMINAL MOVEMENT CAPACITY	MFR. RECOMMENDED MINIMUM DECK JOINT GAP J MIN, AT 110° F (IN)	WIDTH OF SHELF (IN)	MIN. BRIDGE DECK GAP AT 110° F (IN) "G"	DECK JOINT GAP, "J", AT INSTALLATION (IN.)					DEPTH OF SHELF (IN.)
						40° F	50° F	60° F	70° F	80° F	
DECK EXPANSION JOINT											
SKEW = 29.5894°											
EMSEAL	BEJS 0175	-------	0.6875	0.375	0.6036	1.816	1.750	1.684	1.618	1.552	2.5
WABO-FS	FS-175	-------	0.70	0.375	0.6036	1.816	1.750	1.684	1.618	1.552	2.5

NOTE: BRIDGE DECK GAP, G = J - 2 * (WIDTH OF SHELF)

JOINT SELECTION TABLE

DESCRIPTION OF JOINT LOCATION: SPAN 1 - ABUTMENT

THERMAL MOVEMENT RANGE: 0.6696 INCHES

PRODUCT		NOMINAL MOVEMENT CAPACITY	MFR. RECOMMENDED MINIMUM DECK JOINT GAP J MIN, AT 110° F (IN)	WIDTH OF SHELF (IN)	MIN. BRIDGE DECK GAP AT 110° F (IN) "G"	DECK JOINT GAP, "J", AT INSTALLATION (IN.)					DEPTH OF SHELF (IN.)
						40° F	50° F	60° F	70° F	80° F	
DECK EXPANSION JOINT											
SKEW = 54.8232°											
EMSEAL	BEJS 0175	-------	0.6875	0.375	0.8071	1.782	1.750	1.718	1.686	1.654	2.5
WABO-FS	FS-175	-------	0.70	0.375	0.8071	1.782	1.750	1.718	1.686	1.654	2.5

NOTE: BRIDGE DECK GAP, G = J - 2 * (WIDTH OF SHELF)

REV.	DATE	REVISION DESCRIPTION	SHEET NO.

THE INFORMATION, INCLUDING ESTIMATED QUANTITIES OF WORK, SHOWN ON THESE SHEETS IS BASED ON LIMITED INVESTIGATIONS BY THE STATE AND IS IN NO WAY WARRANTED TO INDICATE THE CONDITIONS OF ACTUAL QUANTITIES OF WORK WHICH WILL BE REQUIRED.

Plotted Date: 8/7/2019

DESIGNER/DRAFTER: DLW

CHECKED BY: SH

SCALE AS NOTED

STATE OF CONNECTICUT
DEPARTMENT OF TRANSPORTATION

Filename: ...\S_16_SB_MSH_BR00980B_0063_0712_JNT2.dgn

SIGNATURE/BLOCK:

STATE OF CONNECTICUT JERRY H. HARRIS No. 14513 LICENSED PROFESSIONAL ENGINEER

FUSS & O'NEILL
146 Hartford Road
Manchester, CT 06040
(860)646-2469

PROJECT TITLE:

REHABILITATION OF BRIDGE NO. 00980B I-84 TR 826 OVER CONNECTICUT RIVER

TOWN: **HARTFORD**

DRAWING TITLE: **PREFORMED JOINT SEAL 1**

PROJECT NO. 063-712

DRAWING NO. S-16

SHEET NO. 04.16

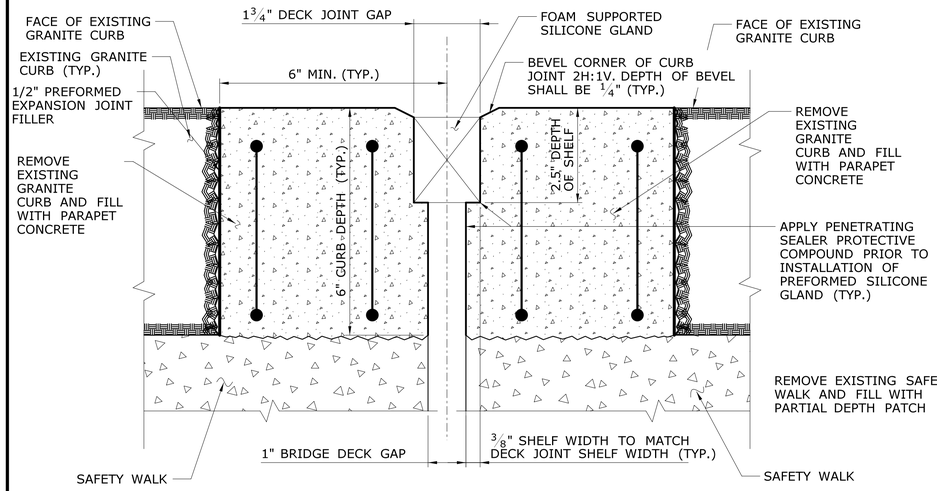

SECTION A

SCALE: 6" = 1'-0"

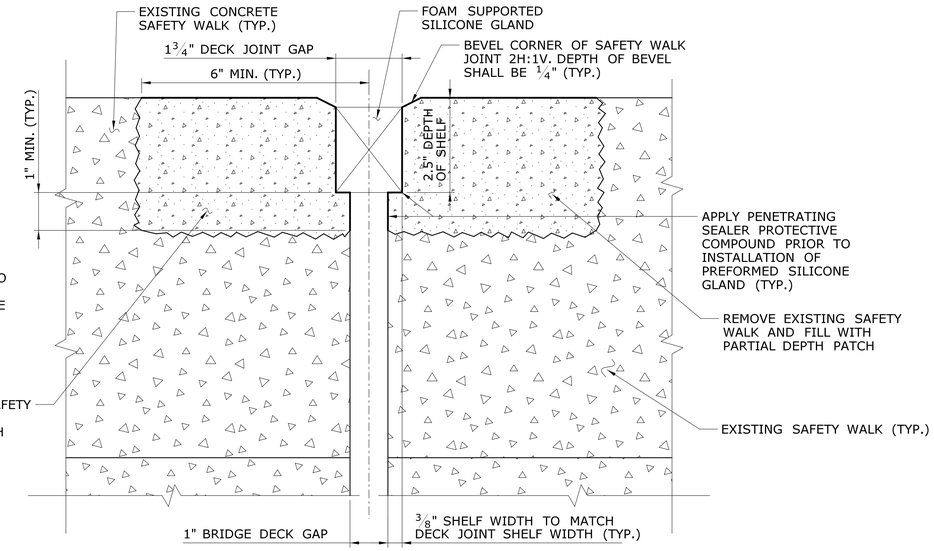

SECTION C

SCALE: 6" = 1'-0"

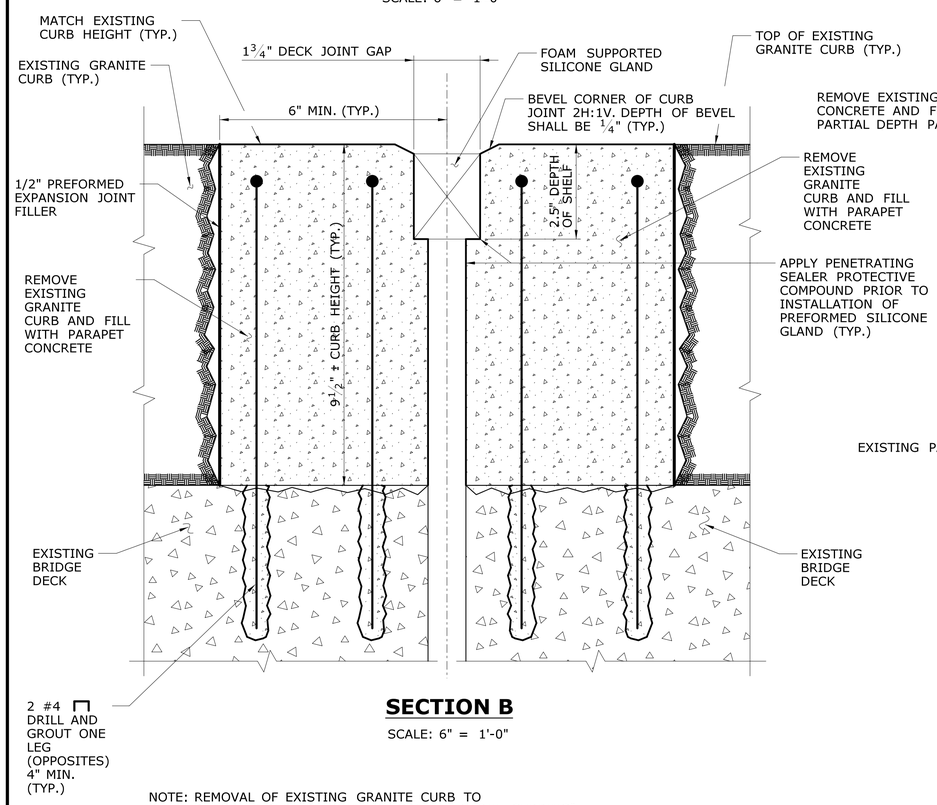

SECTION B

SCALE: 6" = 1'-0"

NOTE: REMOVAL OF EXISTING GRANITE CURB TO BE PAID FOR UNDER "REMOVAL OF GRANITE STONE CURBING"

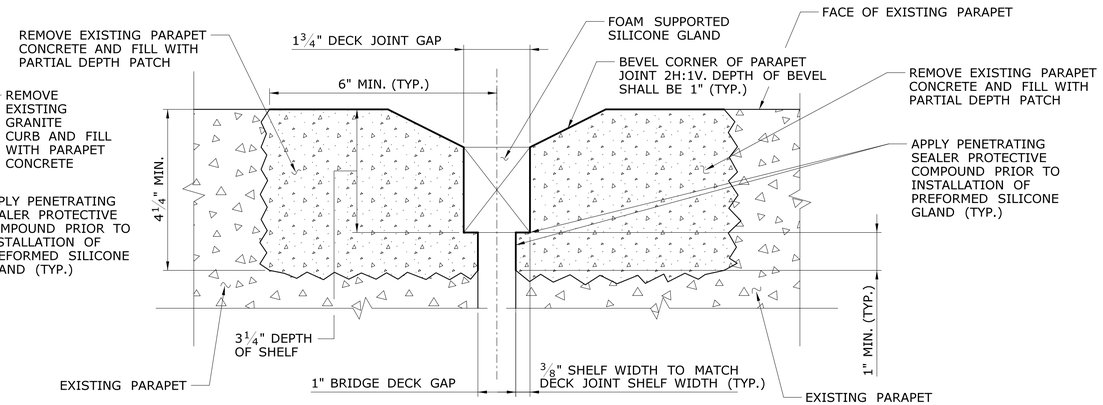

SECTION D

SCALE: 6" = 1'-0"

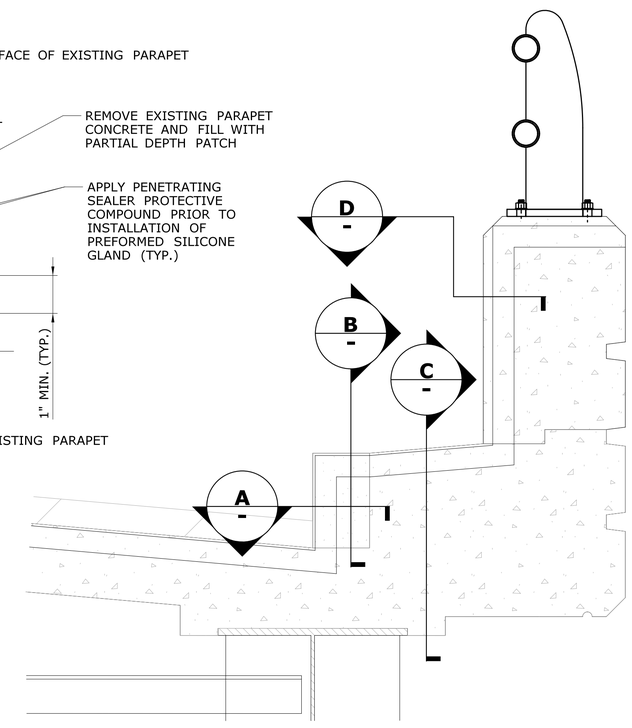

SECTION THROUGH PARAPET WITH SAFETY WALK

SCALE: 1½" = 1'-0"

1

S-15

REV.	DATE	REVISION DESCRIPTION	SHEET NO.

THE INFORMATION, INCLUDING ESTIMATED QUANTITIES OF WORK, SHOWN ON THESE SHEETS IS BASED ON LIMITED INVESTIGATIONS BY THE STATE AND IS IN NO WAY WARRANTED TO INDICATE THE CONDITIONS OF ACTUAL QUANTITIES OF WORK WHICH WILL BE REQUIRED.

Plotted Date: 8/7/2019

DESIGNER/DRAFTER: DLW

CHECKED BY: SH

SCALE AS NOTED

STATE OF CONNECTICUT
DEPARTMENT OF TRANSPORTATION

Filename: ...\S_17_SB_MSH_BR00980B_0063_0712_JNT3.dgn

SIGNATURE/BLOCK:

STATE OF CONNECTICUT · STUART M. HARRIS · No. 14313 · LICENSED · PROFESSIONAL ENGINEER

FUSS & O'NEILL
146 Hartford Road
Manchester, CT 06040
(860)646-2469

PROJECT TITLE:
REHABILITATION OF BRIDGE NO. 00980B I-84 TR 826 OVER CONNECTICUT RIVER

TOWN: HARTFORD

DRAWING TITLE: PREFORMED JOINT SEAL 2

PROJECT NO. 063-712

DRAWING NO. S-17

SHEET NO. 04.17

SCUPPER OUTLET NOTES

THE COST OF REMOVING THE EXISTING BRIDGE DRAINAGE SYSTEM AND REPLACEMENT WITH NEW 12" PVC OUTLETS INCLUDING ALL ATTACHMENT HARDWARE AND HANGERS SHALL BE PAID FOR UNDER THE ITEM "REMOVAL AND REPLACEMENT OF EXISTING BRIDGE DRAINAGE SYSTEM."

PIPE SUPPORT HANGERS AND ATTACHMENT BRACKETS TO SECURE THE DRAINS TO THE PIER FACE SHALL BE WITH STANDARD HARDWARE DESIGNED FOR THIS USE AND TO MANUFACTURER'S RECOMMENDATIONS.

FOR LOCATION IN PLAN AND PIPE SUPPORT DETAILS, SEE FRAMING PLAN S-9.

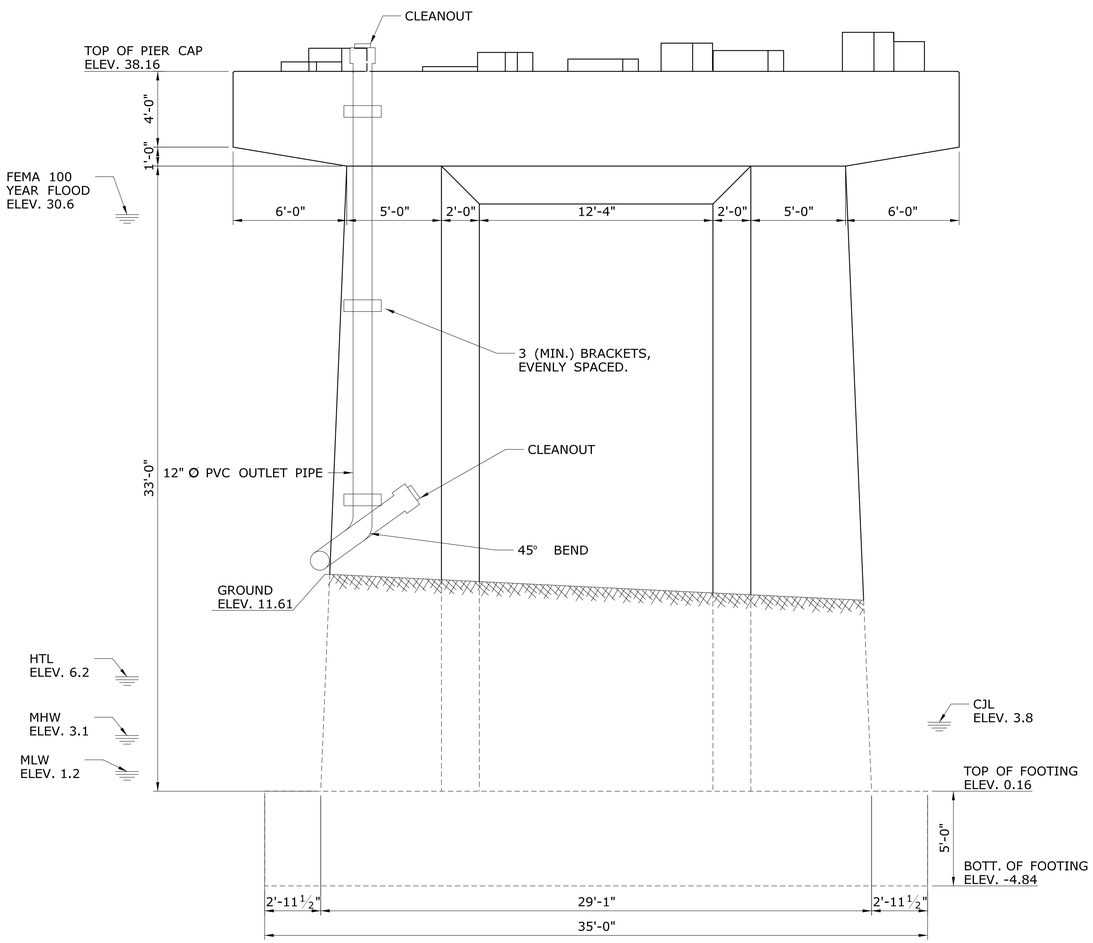

PIER 2 - WEST ELEVATION

SCALE: 1/4" =1'-0"

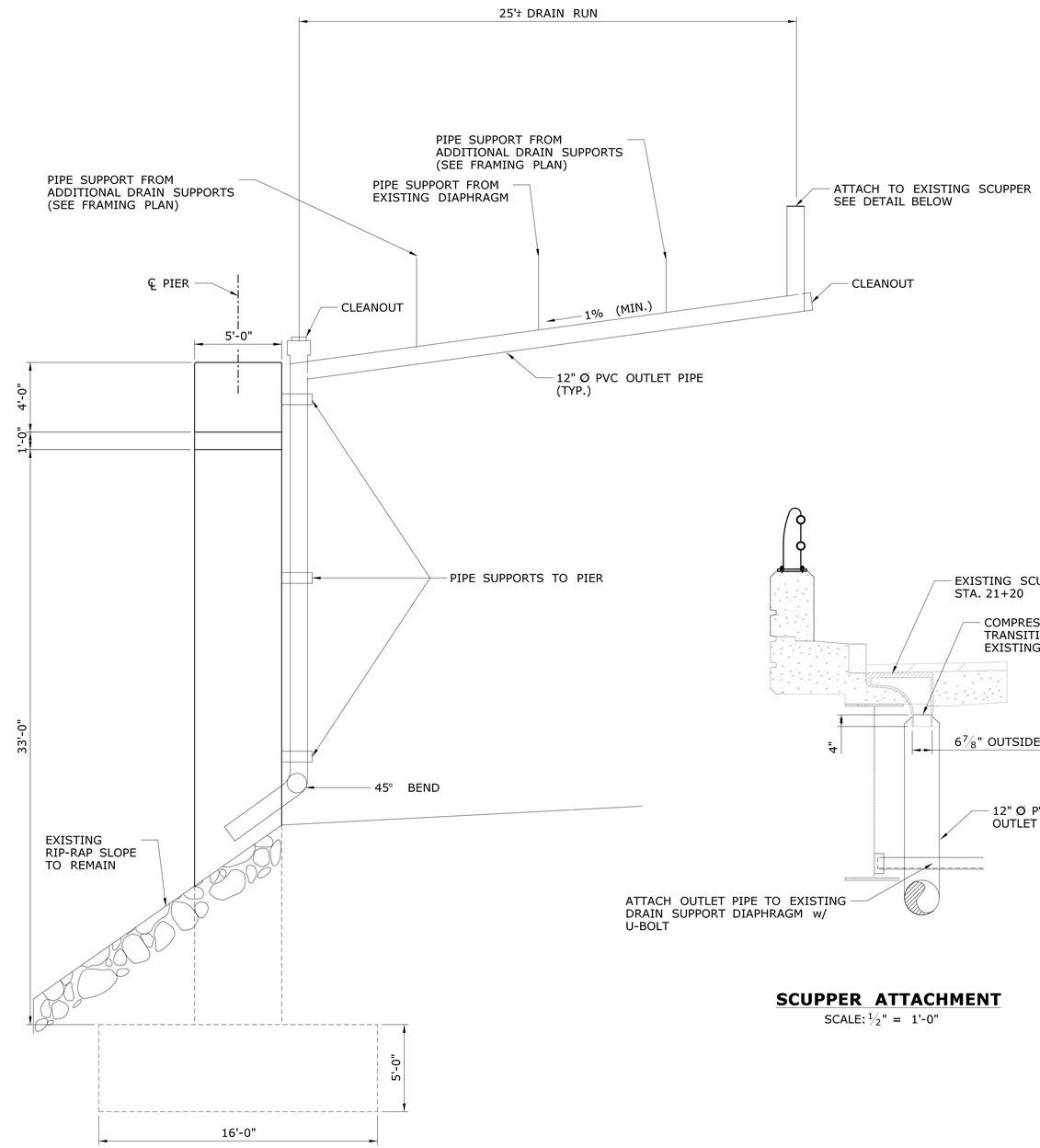

PIER 2 - NORTH ELEVATION

SCALE: 1/4" = 1'-0"

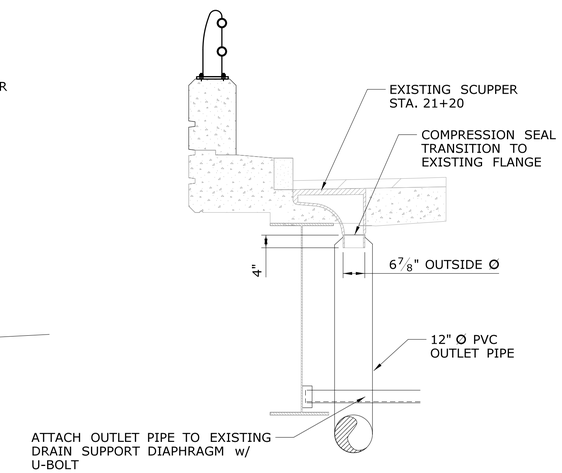

SCUPPER ATTACHMENT

SCALE: 1/2" = 1'-0"

REV.	DATE	REVISION DESCRIPTION	SHEET NO.

Plotted Date: 8/7/2019

DESIGNER/DRAFTER: **DLW**

CHECKED BY: **SHH**

SCALE AS NOTED

STATE OF CONNECTICUT
DEPARTMENT OF TRANSPORTATION

Filename: ...\S_18_SB_MSH_Br00980B_0063_0712_DRN_.dgn

SIGNATURE/BLOCK:

STATE OF CONNECTICUT — STEVEN H. HAWKES — No. 14313 — LICENSED PROFESSIONAL ENGINEER

FUSS & O'NEILL
146 Hartford Road
Manchester, CT 06040
(860)646-2469

PROJECT TITLE:
REHABILITATION OF BRIDGE NO. 00980B I-84 TR 826 OVER CONNECTICUT RIVER

TOWN: **HARTFORD**

DRAWING TITLE: **SCUPPER OUTLET DETAILS**

PROJECT NO. **063-712**

DRAWING NO. **S-18**

SHEET NO. **04.18**

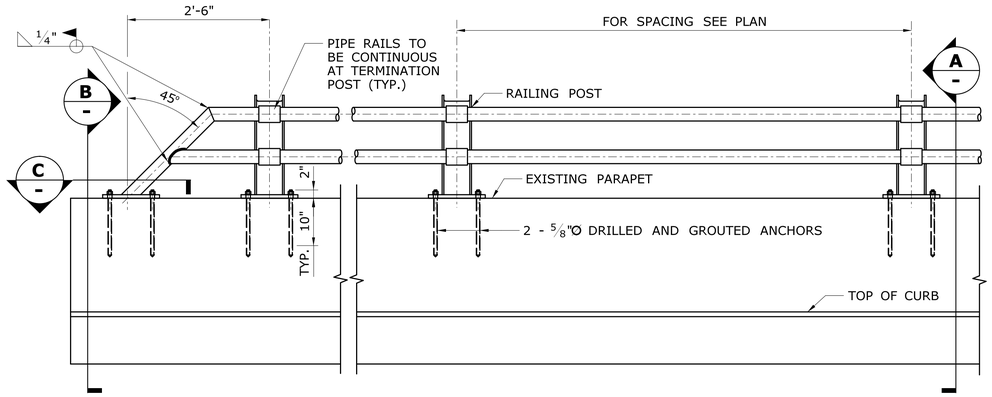

TRAILING END ONLY **TYPICAL**

TWO-TUBE BRIDGE RAIL ELEVATION

SCALE: 3/4 " = 1'-0"

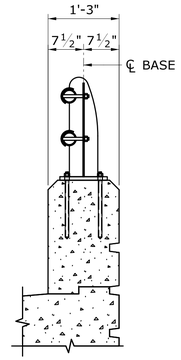

SECTION A -
SCALE: 3/4" = 1'-0"

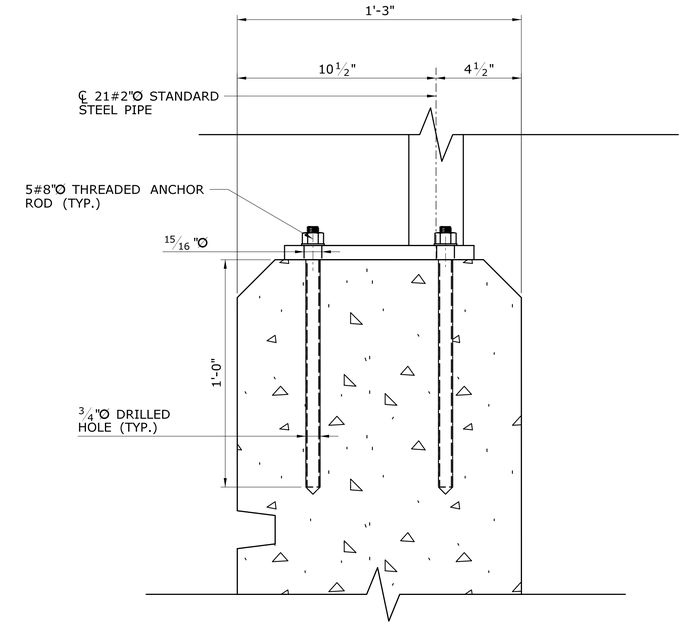

SECTION B -
SCALE: 3" = 1'-0"

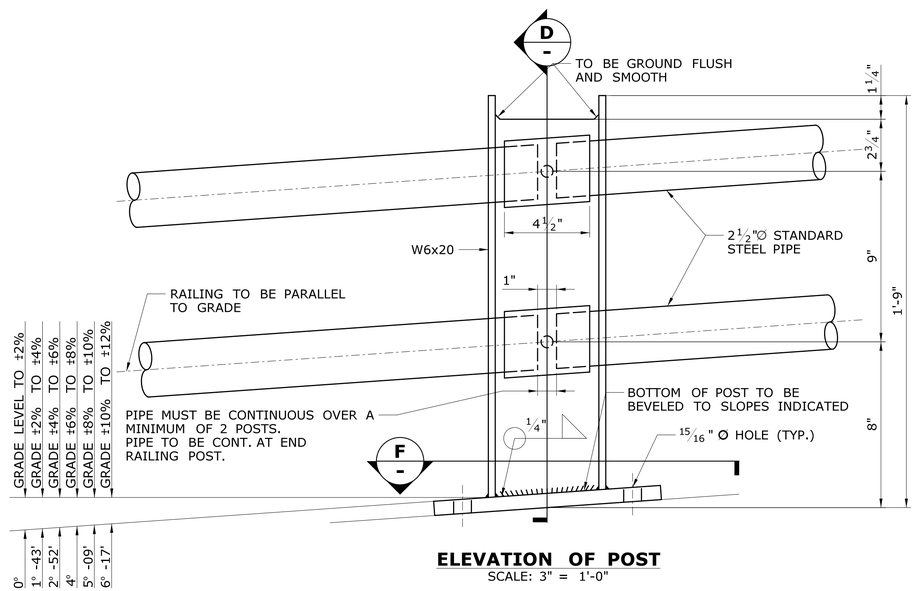

ELEVATION OF POST

SCALE: 3" = 1'-0"

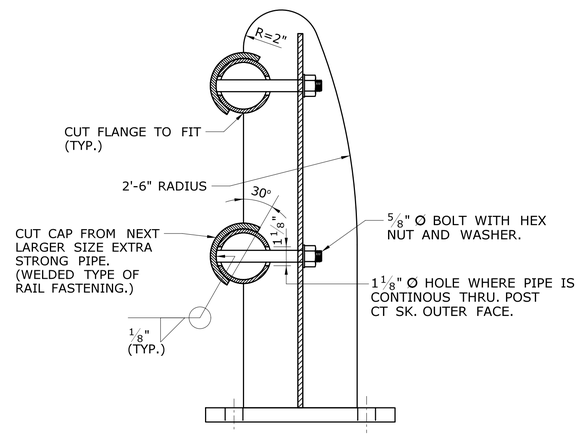

SECTION D -
SCALE: 3" = 1'-0"

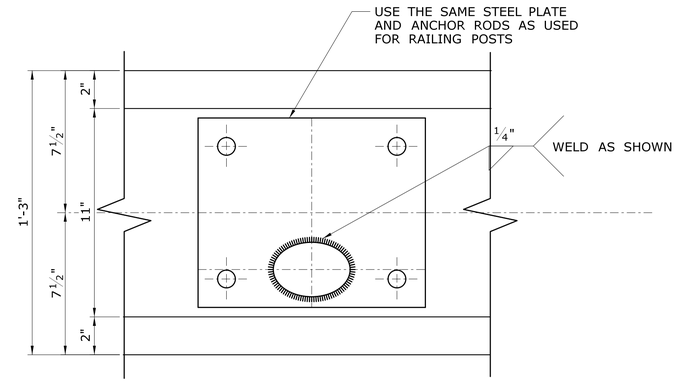

SECTION C -
SCALE: 3" = 1'-0"

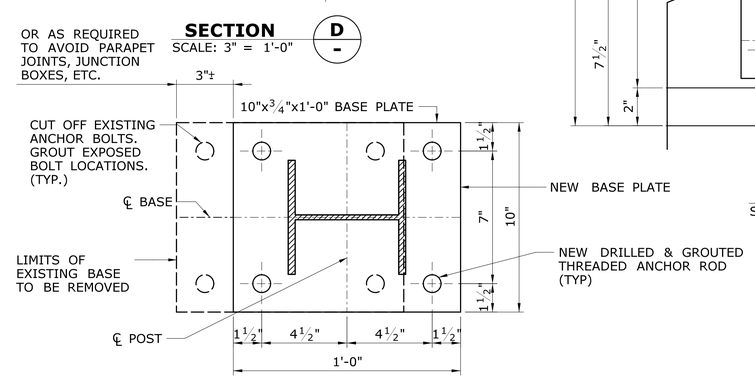

SECTION F -
SCALE: 3" = 1'-0"

METAL BRIDGE RAIL

NEW PIPE RAILS, POSTS, BASE PLATES, AND ANCHOR BOLTS INCLUDING DRILLING AND GROUTING SHALL BE PAID FOR UNDER THE ITEM "TWO-TUBE BRIDGE RAIL".

ALL POSTS TO BE W6x20 STRUCTURAL STEEL.
ALL PIPES TO BE 2 1/2"Ø STANDARD STEEL PIPE.
RAILING POSTS SHALL BE VERTICAL.
IF NECESSARY SHIM WITH 1/8" NEOPRENE PADS.
COST TO BE INCLUDED IN ITEM "TWO-TUBE BRIDGE RAIL".

ALL POSTS, BASE PLATES, AND THREADED ANCHOR RODS SHALL BE GALVANIZED IN ACCORDANCE WITH ASTM A123.

THE REMOVAL OF THE EXISTING BRIDGE RAIL SHALL BE PAID FOR UNDER "REMOVAL OF EXISTING METAL BRIDGE RAIL"

POST DETAILS

REV.	DATE	REVISION DESCRIPTION	SHEET NO.

Plotted Date: 8/7/2019

DESIGNER/DRAFTER: **DLW**
CHECKED BY: **SH**
SCALE AS NOTED

STATE OF CONNECTICUT
DEPARTMENT OF TRANSPORTATION

Filename: ..\S_19_SB_MSH_Br00980B_0063_0712_RAIL_dgn

SIGNATURE/BLOCK:
STATE OF CONNECTICUT · JEFFREY H. HAMPTON · No. 14313 · LICENSED PROFESSIONAL ENGINEER

FUSS & O'NEILL
146 Hartford Road
Manchester, CT 06040
(860)646-2469

PROJECT TITLE:
REHABILITATION OF BRIDGE NO. 00980B I-84 TR 826 OVER CONNECTICUT RIVER

TOWN: **HARTFORD**

DRAWING TITLE: **TWO-TUBE BRIDGE RAIL**

PROJECT NO. **063-712**
DRAWING NO. **S-19**
SHEET NO. **04.19**