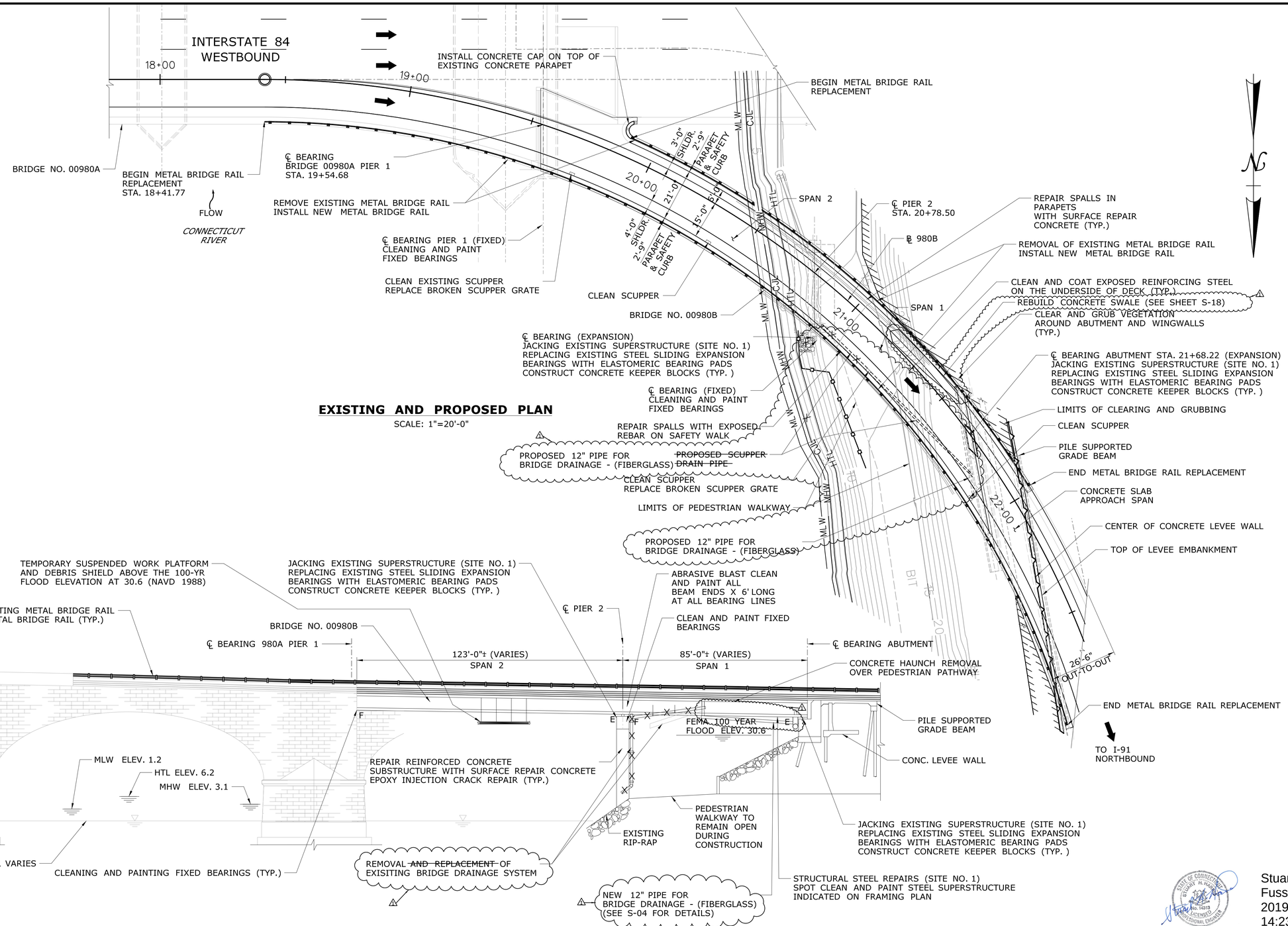

EXISTING AND PROPOSED PLAN

SCALE: 1"=20'-0"

GENERAL NOTES:

E - EXPANSION
F - FIXED

EXISTING AND PROPOSED ELEVATION

SCALE: 1"=20-0"

Stuart Harris, P.E.
Fuss & O'Neill
2019.12.04
14:23:32-05'00'

ADDENDUM NO. 1

REV.	DATE	REVISION DESCRIPTION	SHEET NO.
1	10/23/19	CHANGE LOCATION OF PROPOSED DRAINAGE PIPE	04.02.A1

Plotted Date: 12/4/2019

DESIGNER/DRAFTER: DLW
CHECKED BY: SH
SCALE AS NOTED

STATE OF CONNECTICUT
DEPARTMENT OF TRANSPORTATION

Filename: ...\S_02_SB_MSH_Br00980B_0063_0712_GPN.dgn

SIGNATURE/BLOCK:

FUSS & O'NEILL
146 Hartford Road
Manchester, CT 06040
(860)646-2469

PROJECT TITLE:
REHABILITATION OF BRIDGE NO. 00980B I-84 TR 826 OVER CONNECTICUT RIVER

TOWN: **HARTFORD**

DRAWING TITLE: **GENERAL PLAN AND ELEVATION**

PROJECT NO. 063-712
DRAWING NO. S-02
SHEET NO. 04.02.A1

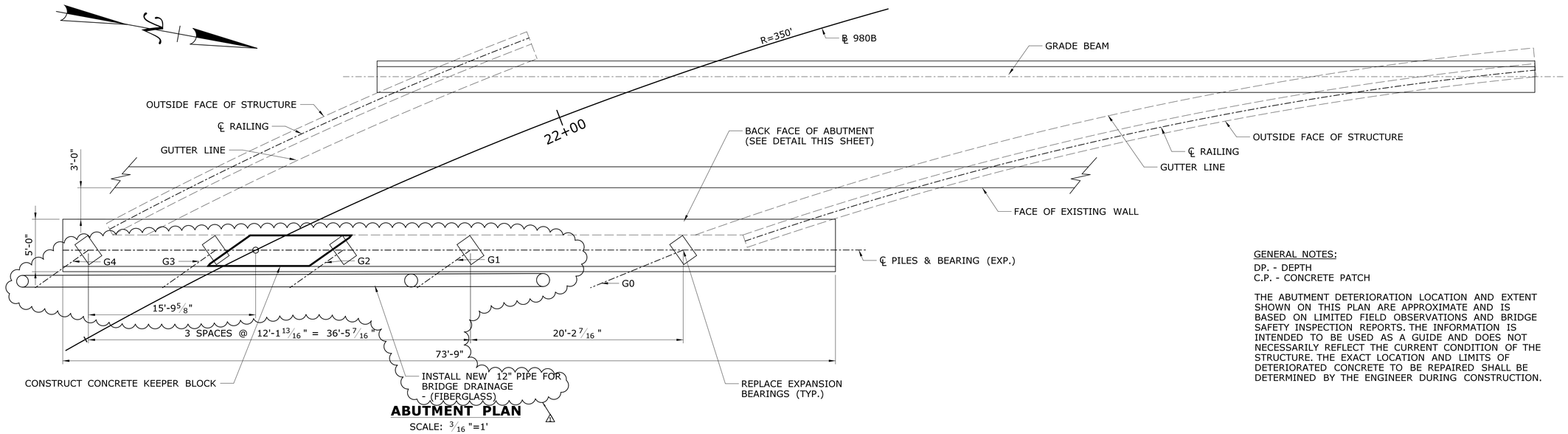

ABUTMENT PLAN

SCALE: 3/16"=1'

GENERAL NOTES:

DP. - DEPTH
C.P. - CONCRETE PATCH

THE ABUTMENT DETERIORATION LOCATION AND EXTENT SHOWN ON THIS PLAN ARE APPROXIMATE AND IS BASED ON LIMITED FIELD OBSERVATIONS AND BRIDGE SAFETY INSPECTION REPORTS. THE INFORMATION IS INTENDED TO BE USED AS A GUIDE AND DOES NOT NECESSARILY REFLECT THE CURRENT CONDITION OF THE STRUCTURE. THE EXACT LOCATION AND LIMITS OF DETERIORATED CONCRETE TO BE REPAIRED SHALL BE DETERMINED BY THE ENGINEER DURING CONSTRUCTION.

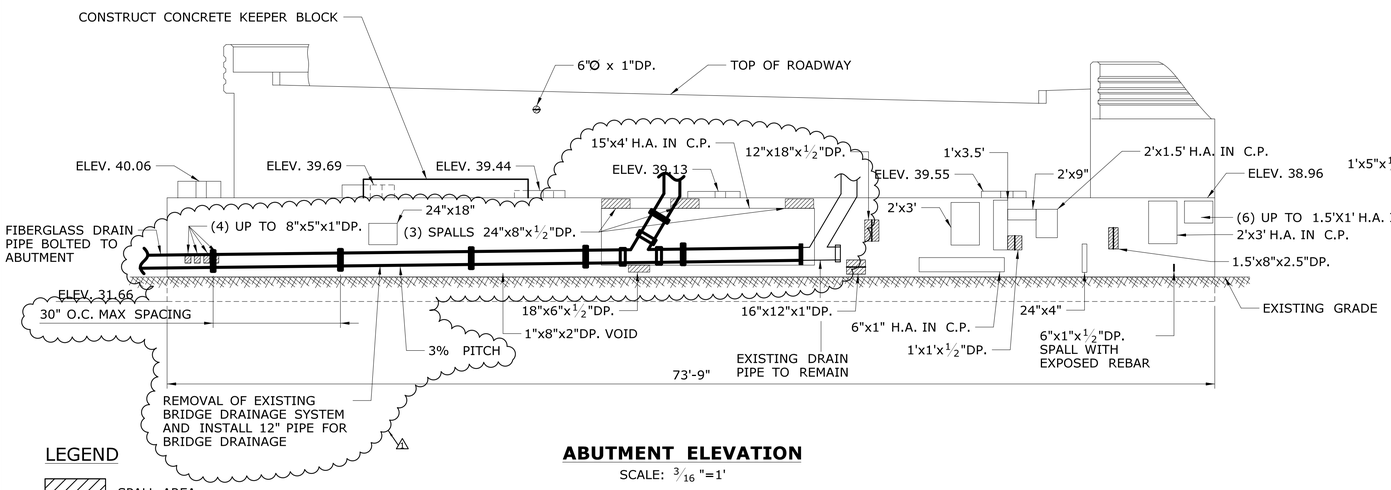

ABUTMENT ELEVATION

SCALE: 3/16"=1'

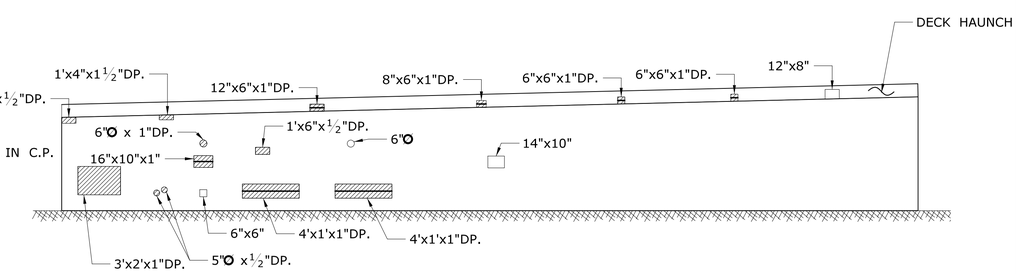

ABUTMENT ELEVATION - BACK FACE

SCALE: 3/16"=1'

LEGEND

- SPALL AREA
- SPALL AREA W/ EXPOSED REBAR
- SHALLOW REINFORCING
- HOLLOW AREA

ADDENDUM NO. 1

REV.	DATE	REVISION DESCRIPTION	SHEET NO.
1	10/23/19	CHANGE PROPOSED DRAINAGE PIPE	04.04.A1

Plotted Date: 12/4/2019

DESIGNER/DRAFTER: DLW
CHECKED BY: SH
SCALE AS NOTED

STATE OF CONNECTICUT
DEPARTMENT OF TRANSPORTATION

Filename: ...\S..04..SB..MSH..Br00980B..0063..0712..ABT.dgn

SIGNATURE/BLOCK:
STATE OF CONNECTICUT · DUANE H. HARRIS · No. 13513 · LICENSED PROFESSIONAL ENGINEER

FUSS & O'NEILL
186 Hartford Road
Manchester, CT 06040
(860)646-2469

PROJECT TITLE:
REHABILITATION OF
BRIDGE NO. 00980B I-84 TR 826
OVER CONNECTICUT RIVER

TOWN: HARTFORD

DRAWING TITLE: ABUTMENT DETAILS

PROJECT NO. 063-712
DRAWING NO. S-04
SHEET NO. 04.04.A1

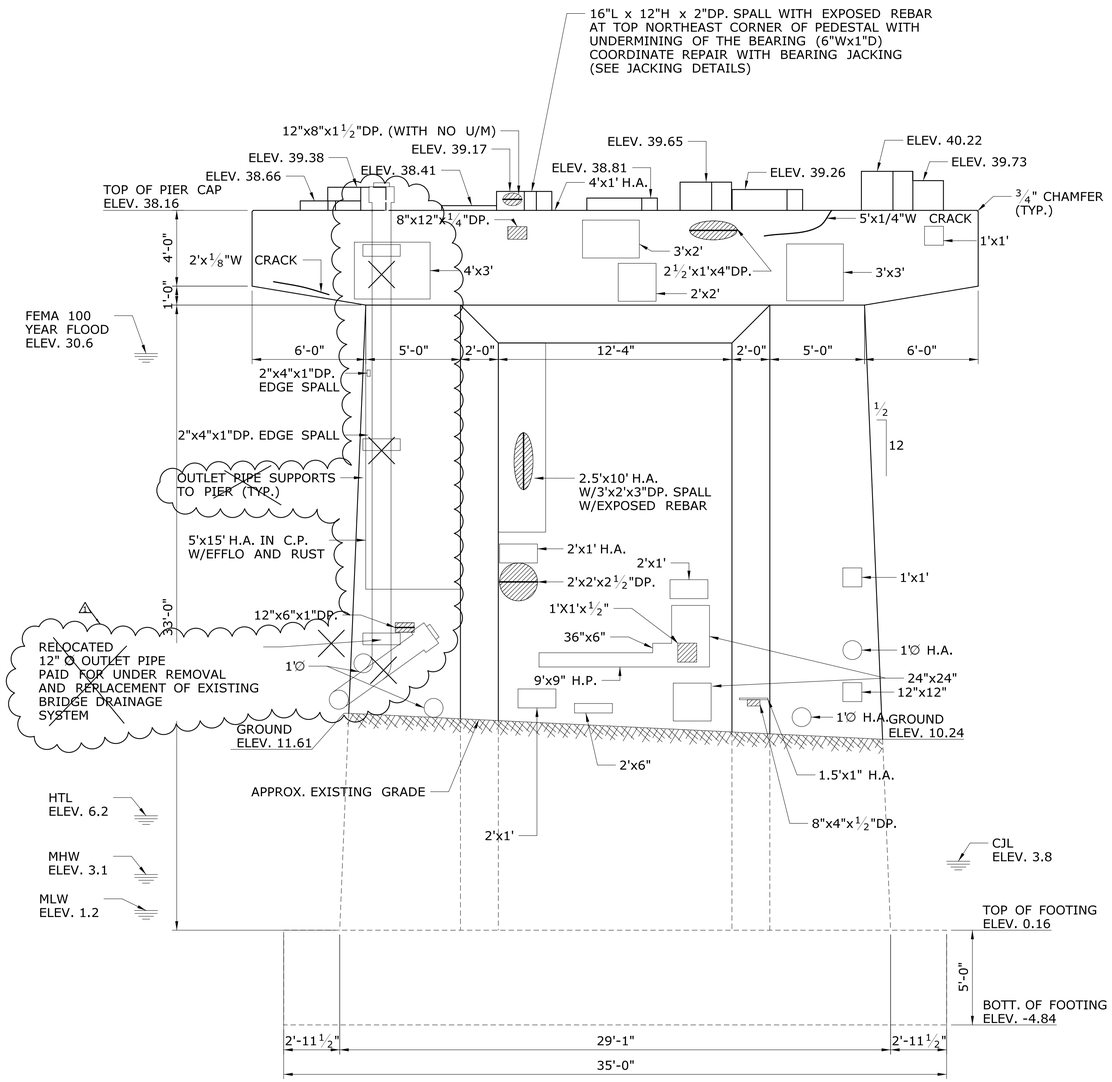

PIER 2 - WEST ELEVATION (TRAIL SIDE)

SCALE: ¼" =1'-0"

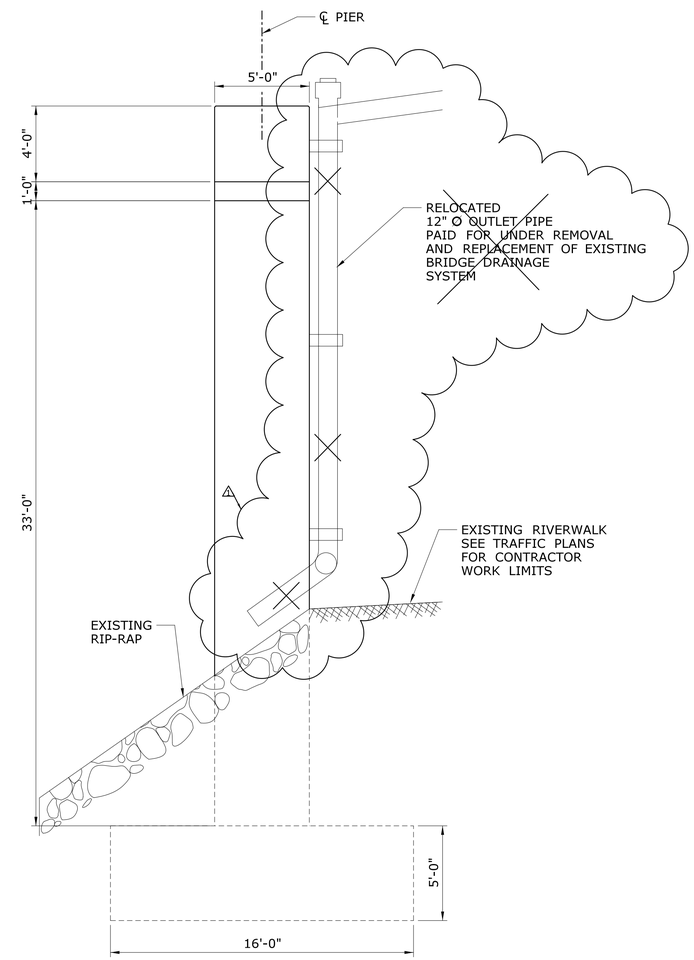

PIER 2 - NORTH ELEVATION

SCALE: ¼" = 1'-0"

GENERAL NOTES:

DP - DEPTH
C.P. - CONCRETE PATCH
U/M - UNDERMINING

THE SUBSTRUCTURE DETERIORATION LOCATION AND EXTENT SHOWN ON THIS PLAN ARE APPROXIMATE AND IS BASED ON LIMITED FIELD OBSERVATIONS AND BRIDGE SAFETY INSPECTION REPORTS. THE INFORMATION IS INTENDED TO BE USED AS A GUIDE AND DOES NOT NECESSARILY REFLECT THE CURRENT CONDITION OF THE STRUCTURE. THE EXACT LOCATION AND LIMITS OF DETERIORATED CONCRETE TO BE REPAIRED SHALL BE DETERMINED BY THE ENGINEER DURING CONSTRUCTION.

LEGEND

- SPALL AREA
- SPALL AREA W/ EXPOSED REBAR
- SHALLOW REINFORCING
- HOLLOW AREA

ADDENDUM NO. 1

REV.	DATE	REVISION DESCRIPTION	SHEET NO.
1	10/23/19	CHANGE LOCATION OF PROPOSED DRAINAGE PIPE	04.06.A1

Plotted Date: 12/4/2019

DESIGNER/DRAFTER: **DLW**
CHECKED BY: **SH**
SCALE AS NOTED

STATE OF CONNECTICUT
DEPARTMENT OF TRANSPORTATION

Filename: ...\S..06..SB..MSH..Br00980B..0063..0712..PIR2..dgn

SIGNATURE/BLOCK:
STATE OF CONNECTICUT JUANIT H. HARDING No. 14313 LICENSED PROFESSIONAL ENGINEER

FUSS & O'NEILL
146 Hartford Road
Manchester, CT 06040
(860)646-2469

PROJECT TITLE:
REHABILITATION OF BRIDGE NO. 00980B I-84 TR 826 OVER CONNECTICUT RIVER

TOWN: **HARTFORD**

DRAWING TITLE: **PIER 2 DETAILS - 2**

PROJECT NO. **063-712**
DRAWING NO. **S-06**
SHEET NO. **04.06.A1**

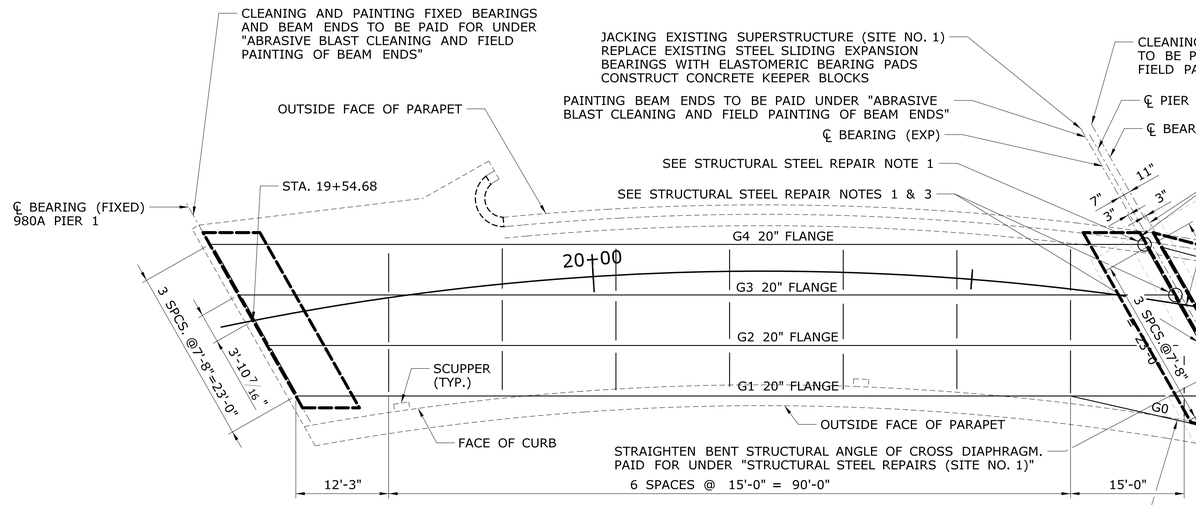

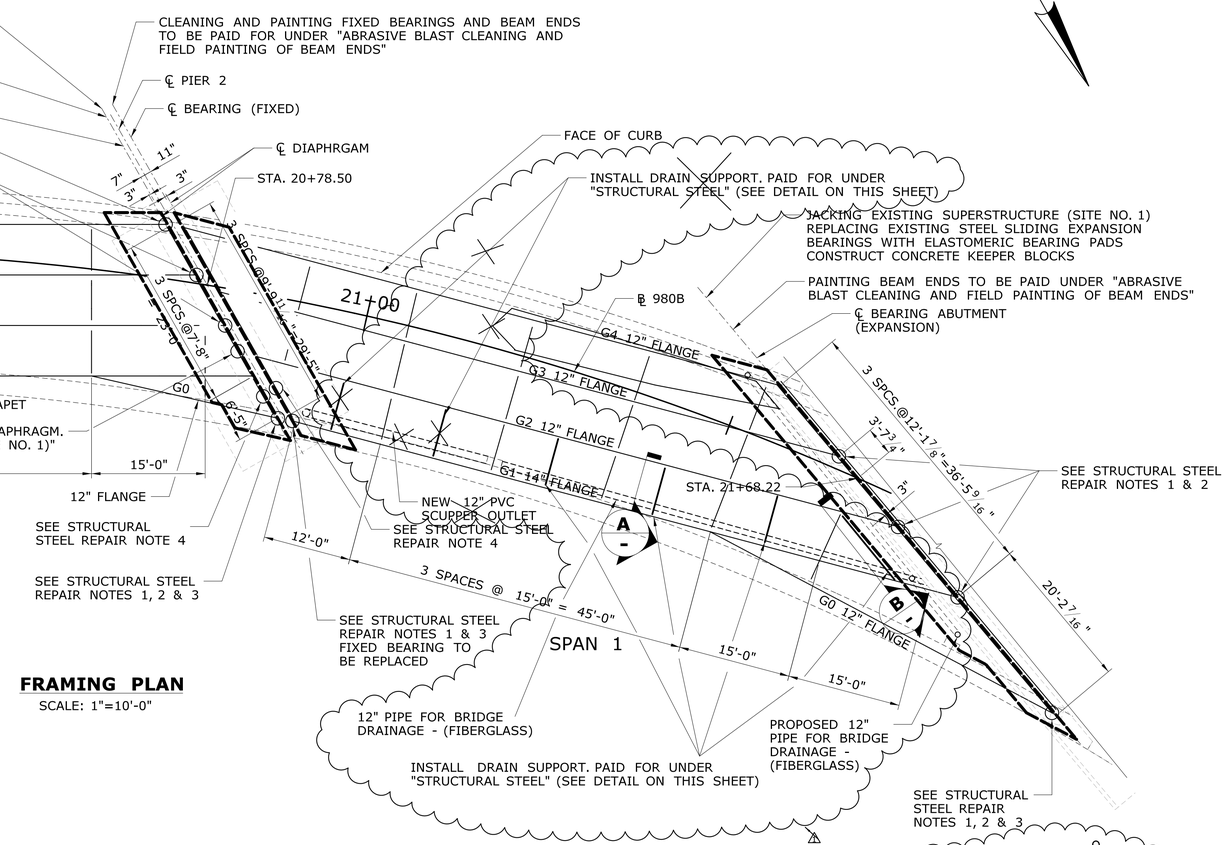

FRAMING PLAN

SCALE: 1"=10'-0"

PAINTING OF BEAM LEGEND:

DESIGNATES LIMITS FOR PAINTING OF BEAM ENDS 6FT INTO SPAN FROM END OF BEAM TO BE PAID UNDER "ABRASIVE BLAST CLEANING AND FIELD PAINTING OF BEAM ENDS" (SEE DETAILS ON SHEETS 10 AND 11)

STEEL REPAIR LEGEND:

1. LOCATION OF GIRDER WEB REPAIR. FOR DETAIL SEE REPAIR DETAIL 1, 2 & 3 ON DRAWING NO. S-10.
2. LOCATION OF GIRDER BOTTOM FLANGE REPAIR. FOR DETAIL SEE REPAIR DETAIL 4 ON DRAWING NO. S-11.
3. LOCATION OF BEARING STIFFENER REPLACEMENT. G-1, G-2, G-3 TO BE REPLACED WITH 9" x 5/8" STIFFENERS. G-0 TO BE REPLACED WITH 6" x 1/2" STIFFENERS. FOR MORE INFORMATION REFER TO EXISTING PLANS.
4. LOCATION OF DIAPHRAGM REPAIR. FOR DETAIL SEE DRAWING NO. S-11.

NOTE:

1. REPAIR LOCATIONS SHOWN ON THIS SHEET ARE BASED ON THE AI ENGINEERS, INC. INSPECTION DATED 11/19/2018.
2. FOR INFORMATION PERTAINING TO THE EXISTING STRUCTURE NOT SHOWN, USE ORIGINAL DESIGN DRAWING DATED 1961.

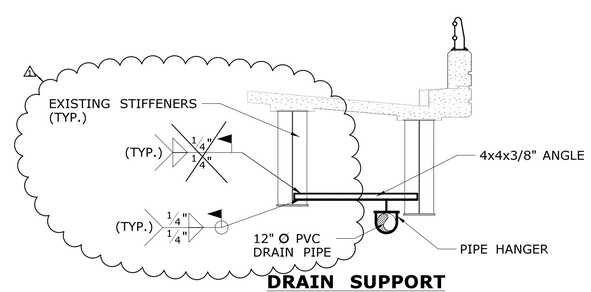

DRAIN SUPPORT

SECTION A
SCALE 1/4" = 1'-0"

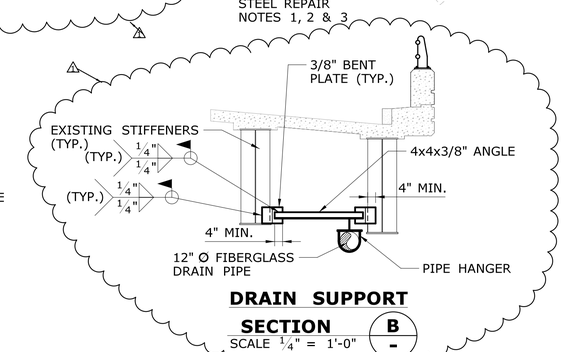

DRAIN SUPPORT

SECTION B
SCALE 1/4" = 1'-0"

ADDENDUM NO. 1

REV.	DATE	REVISION DESCRIPTION	SHEET NO.
1	10/23/19	CHANGE LOCATION OF PROPOSED DRAINAGE PIPE	04.09.A1

THE INFORMATION, INCLUDING ESTIMATED QUANTITIES OF WORK, SHOWN ON THESE SHEETS IS BASED ON LIMITED INVESTIGATIONS BY THE STATE AND IS IN NO WAY WARRANTED TO INDICATE THE CONDITIONS OF ACTUAL QUANTITIES OF WORK WHICH WILL BE REQUIRED.

Plotted Date: 12/4/2019

DESIGNER/DRAFTER: EH
CHECKED BY: AG
SCALE IN FEET 0 40 80
SCALE 1"=40'

STATE OF CONNECTICUT
DEPARTMENT OF TRANSPORTATION

Filename: ...\S_09_SB_MSH_Br00980B_0063_0712_FRM.DGN

SIGNATURE/BLOCK:
STATE OF CONNECTICUT STUART H. HARPER No. 14313 LICENSED PROFESSIONAL ENGINEER

FUSS & O'NEILL
146 Hartford Road
Manchester, CT 06040
(860)646-2469

PROJECT TITLE:
REHABILITATION OF BRIDGE NO. 00980B I-84 TR 826 OVER CONNECTICUT RIVER

TOWN: **HARTFORD**

DRAWING TITLE: **FRAMING PLAN**

PROJECT NO. 063-712
DRAWING NO. S-09
SHEET NO. 04.09.A1

LEGEND

SPALL AREA

SPALL AREA W/ EXPOSED REBAR

HONEY COMB AREA

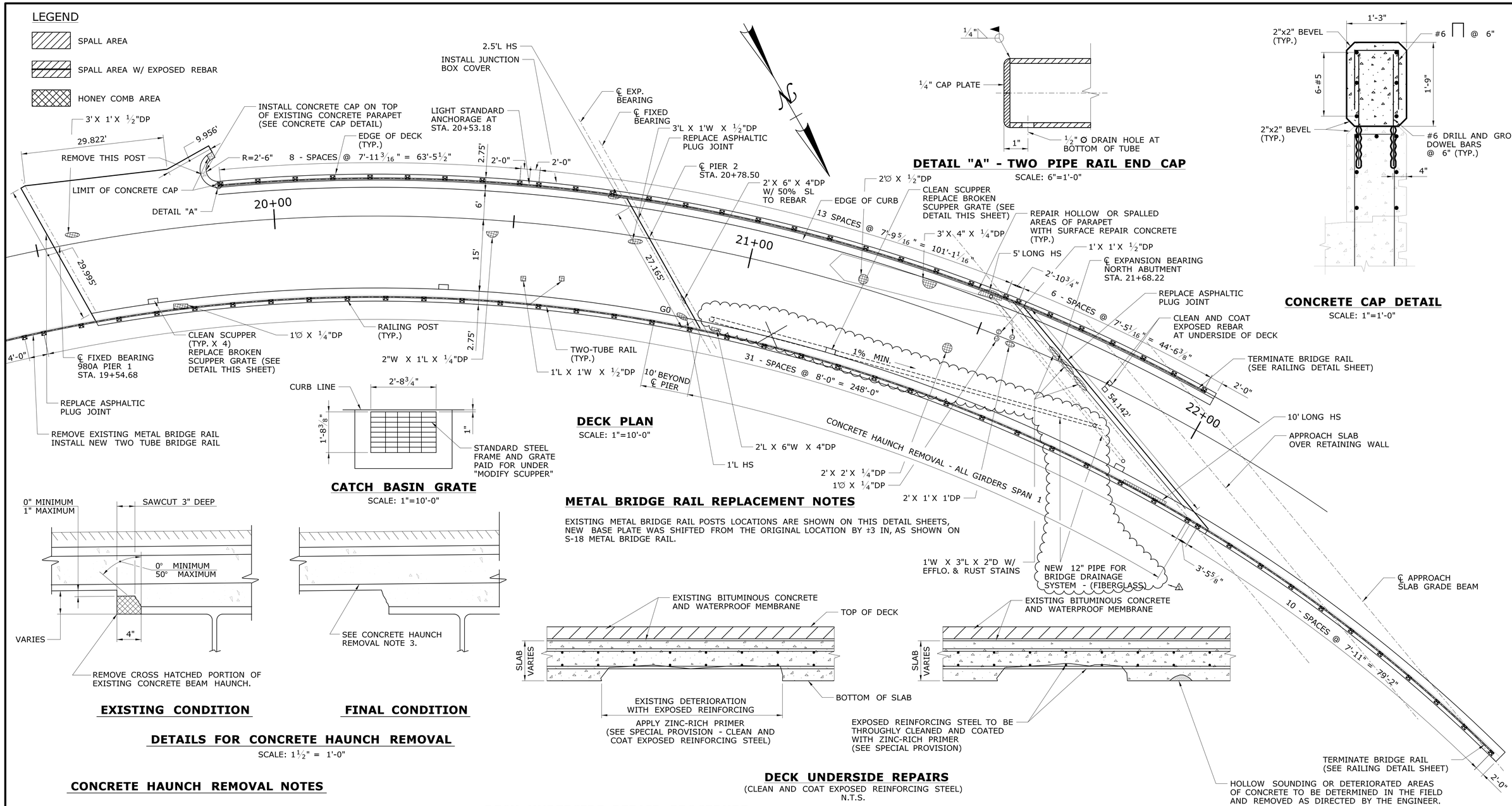

DECK PLAN

SCALE: 1"=10'-0"

DETAIL "A" - TWO PIPE RAIL END CAP

SCALE: 6"=1'-0"

CONCRETE CAP DETAIL

SCALE: 1"=1'-0"

CATCH BASIN GRATE

SCALE: 1"=10'-0"

EXISTING CONDITION **FINAL CONDITION**

DETAILS FOR CONCRETE HAUNCH REMOVAL

SCALE: 1½" = 1'-0"

METAL BRIDGE RAIL REPLACEMENT NOTES

EXISTING METAL BRIDGE RAIL POSTS LOCATIONS ARE SHOWN ON THIS DETAIL SHEETS, NEW BASE PLATE WAS SHIFTED FROM THE ORIGINAL LOCATION BY ±3 IN, AS SHOWN ON S-18 METAL BRIDGE RAIL.

DECK UNDERSIDE REPAIRS

(CLEAN AND COAT EXPOSED REINFORCING STEEL)
N.T.S.

CONCRETE HAUNCH REMOVAL NOTES

1. DEBRIS SHIELD TO BE INSTALLED PRIOR TO CONCRETE HAUCH REMOVAL. SEE PROSECUTION AND PROGRESS.
2. REMOVE CONCRETE HAUNCH FOR ALL GIRDERS AT SPAN 1 OR AS DIRECTED BY THE ENGINEER.
3. THE REMOVAL OF THE PORTION OF CONCRETE HAUNCH SHOWN SHALL BE PAID FOR UNDER THE ITEM "CONCRETE HAUNCH REMOVAL".
4. IN THE EVENT OF CONCRETE OVER-REMOVAL EXPOSES ADDITIONAL REINFORCING, APPLY TWO COATS OF ZINC-RICH PRIMER TO ADDITIONAL DECK REINFORCING STEEL EXPOSED. ALL REASONABLE PRECAUTIONS SHALL BE TAKEN TO AVOID THIS CONDITION.

DECK UNDERSIDE REPAIR PROCEDURE

1. REMOVE DETERIORATED CONCRETE TO SOUND CONCRETE TO THE LIMITS SHOWN ON THE PLANS OR AS DIRECTED BY THE ENGINEER BY HAND TOOLS OR PNEUMATIC HAMMERS NOT TO EXCEED 15 POUNDS AND ACCORDING TO THE SPECIAL PROVISIONS.
2. PRESERVE EXPOSED REINFORCING STEEL, IF ANY. WIRE BRUSH THE REBAR TO SSPC-SP3 POWER TOOL REQUIREMENT.
3. CLEAN THE SOUND CONCRETE SURFACE AREA AND EXPOSED REINFORCING STEEL OF ALL LOOSE OR POWDER-LIKE RUST, OIL, DIRT, LOOSE PARTICLES, AND OTHER BOND-INHIBITTING MATTER BY ANY APPROVED METHOD.
4. COAT THE EXPOSED REINFORCING STEEL WITH ZINC-RICH PRIMER ACCORDING TO THE SPECIAL PROVISIONS.

ASPHALTIC PLUG JOINT NOTES:

SEE SHEET S-15 FOR DETAILS

ADDENDUM NO. 1

REV.	DATE	REVISION DESCRIPTION	SHEET NO.
1	10/23/19	CHANGE LOCATION OF PROPOSED DRAINAGE PIPE	04.14.A1

Plotted Date: 12/4/2019

DESIGNER/DRAFTER: DLW
CHECKED BY: SH
SCALE AS NOTED

STATE OF CONNECTICUT
DEPARTMENT OF TRANSPORTATION

Filename: ...\S_14_SB_MSH_Br00980B_0063_0712_DCK.dgn

SIGNATURE/BLOCK:

STATE OF CONNECTICUT — MARY H. HARRIS — No. 14812 — LICENSED PROFESSIONAL ENGINEER

FUSS & O'NEILL
146 Hartford Road
Manchester, CT 06040
(860)646-2469

PROJECT TITLE:
REHABILITATION OF BRIDGE NO. 00980B I-84 TR 826 OVER CONNECTICUT RIVER

TOWN: **HARTFORD**

DRAWING TITLE: **DECK PLAN**

PROJECT NO. 063-712
DRAWING NO. S-14
SHEET NO. 04.14.A1

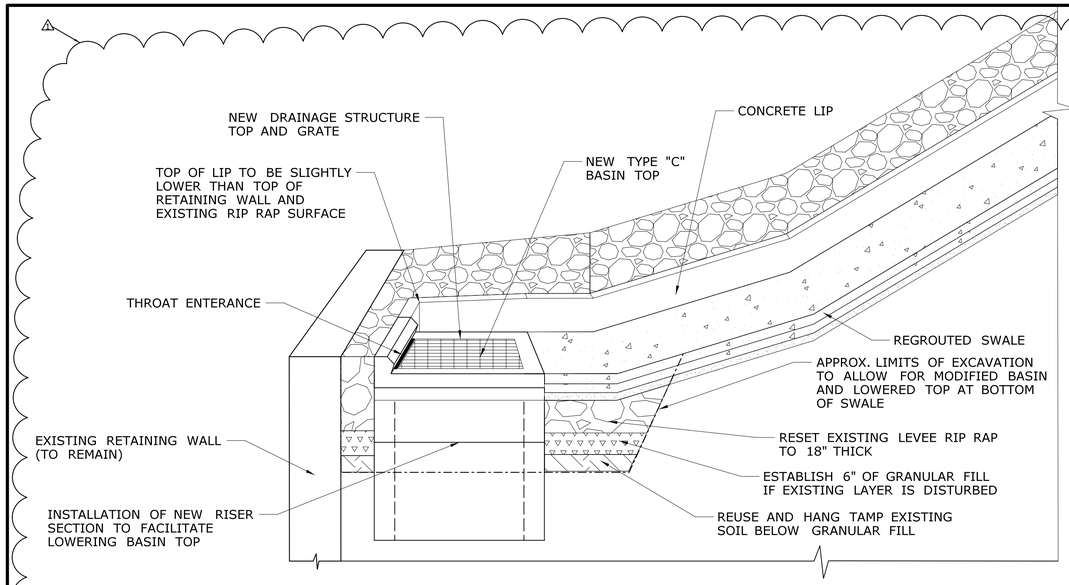

DEVELOPED SECTION C-C
NOT TO SCALE

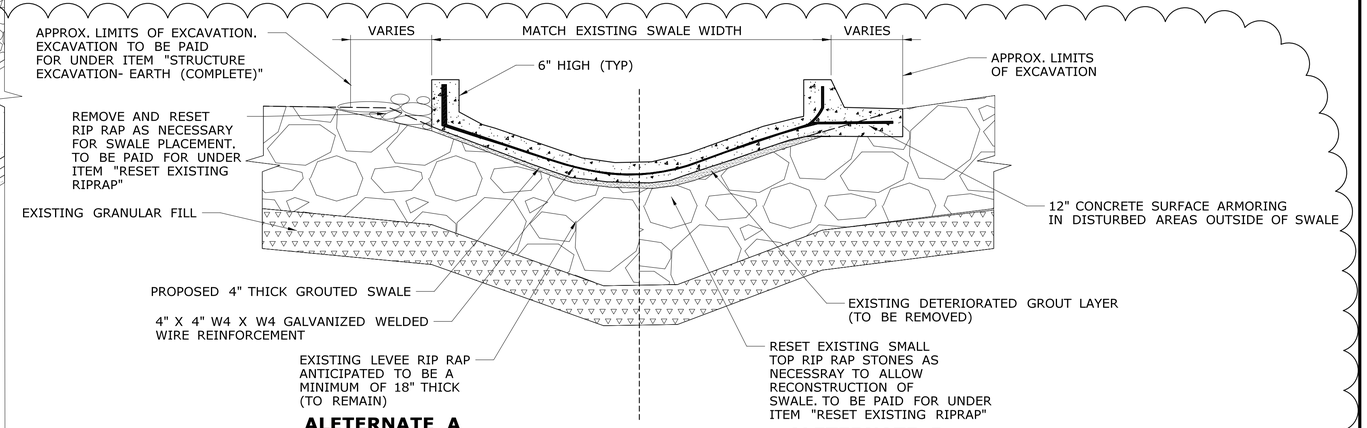

SWALE SECTION B-B
NOT TO SCALE

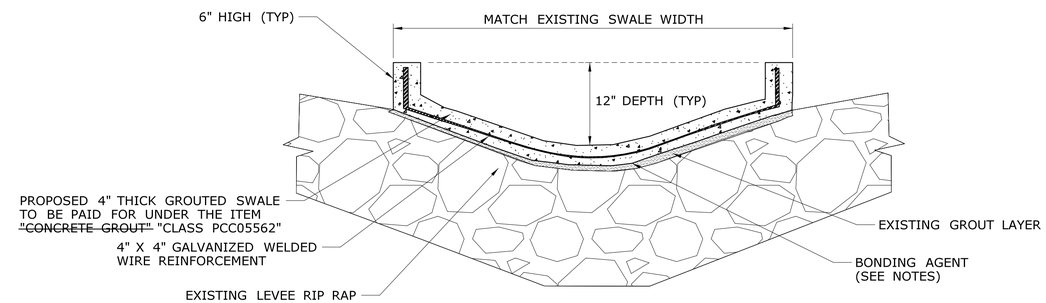

TYPICAL SWALE SECTION A-A
NOT TO SCALE

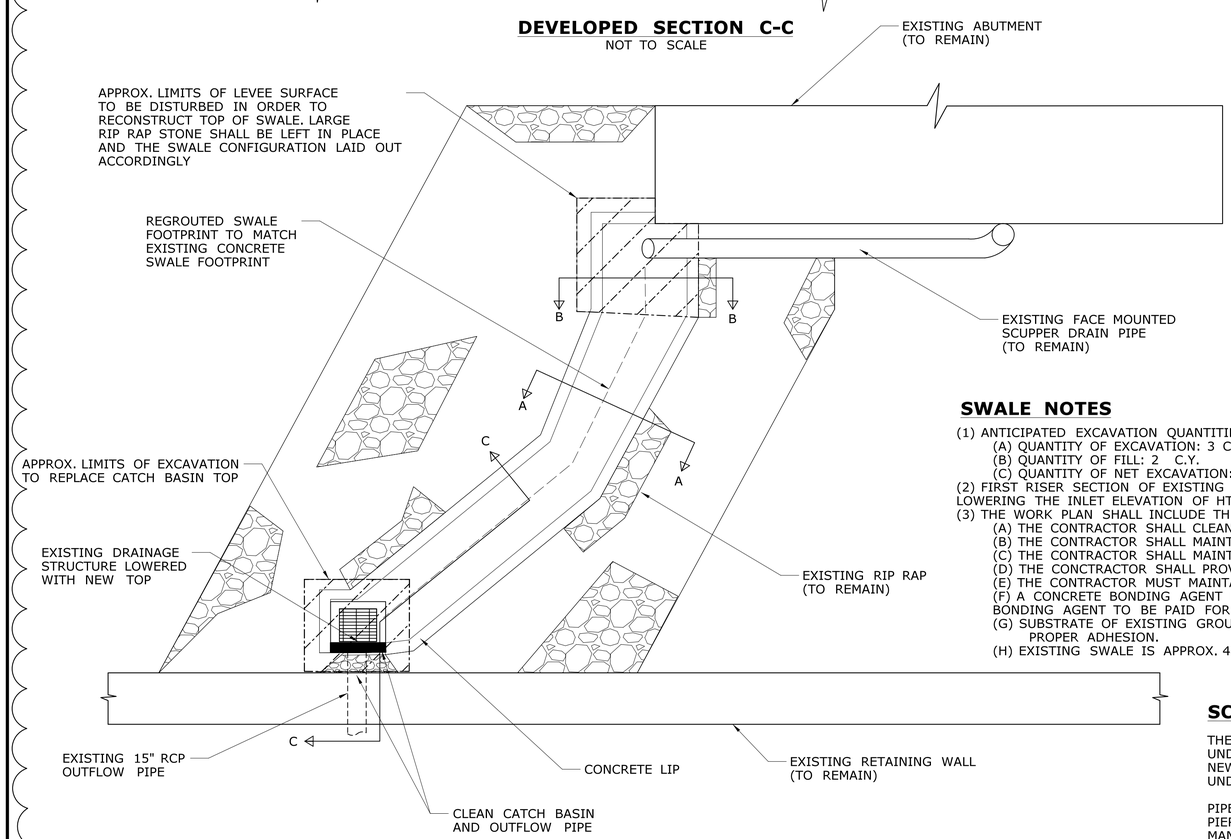

PLAN VIEW
NOT TO SCALE

SWALE NOTES

(1) ANTICIPATED EXCAVATION QUANTITIES ARE AS FOLLOWS:
- (A) QUANTITY OF EXCAVATION: 3 C.Y.
- (B) QUANTITY OF FILL: 2 C.Y.
- (C) QUANTITY OF NET EXCAVATION: 1 C.Y.

(2) FIRST RISER SECTION OF EXISTING BASIN TO BE REMOVED. NEW RISER TO BE INSTALLED WITH NEW TYPE "C" BASIN TOP TO FACILITATE LOWERING THE INLET ELEVATION OF HTE STRUCTURE AND MATCH PROPOSED ELEVATION OF REGROUTED SWALE.

(3) THE WORK PLAN SHALL INCLUDE THE FOLLOWING INFORMATION, MODIFIED APPROPRIATELY BASED ON REVIEW COMMENTS FROM ALL PARTIES.
- (A) THE CONTRACTOR SHALL CLEAN UP ALL LOOSE PIECES OF EXISTING GROUT IN EXISTING CHANNEL.
- (B) THE CONTRACTOR SHALL MAINTAIN 48" WIDTH FROM TOP OF CHANNEL TO DRDAINAGE STRUCTURE AT THE BOTTOM.
- (C) THE CONTRACTOR SHALL MAINTAIN A DEPTH OF 12" FOR CHANNEL FROM TOP OF SWALE TO THE DRAINAGE STRUCTURE.
- (D) THE CONCTRACTOR SHALL PROVIDE AN ACCESS PLAN AND EQUIPMENT TO BE USED.
- (E) THE CONTRACTOR MUST MAINTAIN MIN. 2" GROUT COVERAGE OVER AND UNDER WIRE MESH.
- (F) A CONCRETE BONDING AGENT FORMULATED SPECIFICALLY FOR BONDING NEW C-I-P CONCRETE TO EXISTING SURFACE. CONCRETE BONDING AGENT TO BE PAID FOR UNDER THE ITEM "CLASS PCC05562".
- (G) SUBSTRATE OF EXISTING GROUT SHALL BE PREPARED IN ACCORDANCE WITH BONDING AGENT MANUFACTURER SUGGESTIONS TO PROMOTE PROPER ADHESION.
- (H) EXISTING SWALE IS APPROX. 48" WIDE AND 12" DEEP.

SCUPPER OUTLET NOTES

THE COST OF REMOVING THE EXISTING BRIDGE DRAINAGE SYSTEM SHALL BE PAID FOR UNDER THE ITEM "REMOVAL OF EXISTING BRIDGE DRAINAGE SYSTEM." INSTALLATION OF NEW 12" FIBERGLASS OUTLETS TO BE PAID FOR UNDER THE ITEM " 12" PIPE FOR BRIDGE DRAINAGE - (FIBERGLASS)"

PIPE SUPPORT HANGERS AND ATTACHMENT BRACKETS TO SECURE THE DRAINS TO THE PIER FACE SHALL BE WITH STANDARD HARDWARE DESIGNED FOR THIS USE AND TO MANUFACTURER'S RECOMMENDATIONS.

FOR LOCATION IN PLAN AND PIPE SUPPORT DETAILS, SEE FRAMING PLAN S-9.

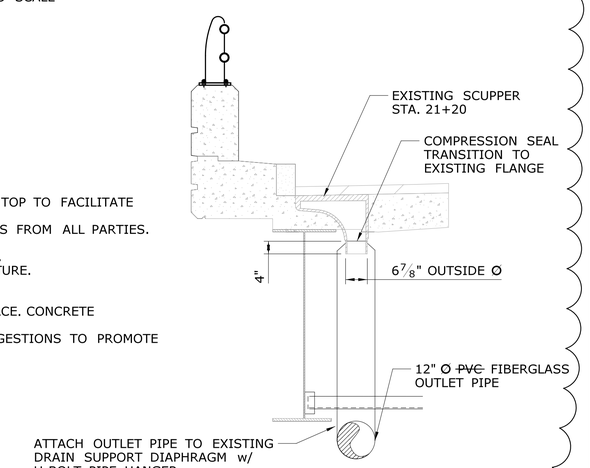

SCUPPER ATTACHMENT
SCALE: 1/2" = 1'-0"

ADDENDUM NO. 1

REV.	DATE	REVISION DESCRIPTION	SHEET NO.
1	10/23/19	DRAINAGE DETAIL CHANGED TO SWALE DETAIL	04.18.A1

Plotted Date: 12/4/2019

DESIGNER/DRAFTER: DLW
CHECKED BY: SHH
SCALE AS NOTED

STATE OF CONNECTICUT
DEPARTMENT OF TRANSPORTATION

Filename: ...\S_18_SB_MSH_Br00980B_0063_0712_DRN_dgn

SIGNATURE/BLOCK:
STATE OF CONNECTICUT — DUANE H. HARDING — No. 14313 — LICENSED PROFESSIONAL ENGINEER

FUSS & O'NEILL
146 Hartford Road
Manchester, CT 06040
(860)646-2469

PROJECT TITLE:
REHABILITATION OF BRIDGE NO. 00980B I-84 TR 826 OVER CONNECTICUT RIVER

TOWN: **HARTFORD**

DRAWING TITLE: **SCUPPER OUTLET DETAILS**

PROJECT NO. 063-712
DRAWING NO. S-18
SHEET NO. 04.18.A1