SUBSET 04 - SCHEMATICS AND OTHER DETAILS

INDEX OF DRAWINGS

DRAWING NUMBER	DRAWING TITLE	DRAWING NUMBER	
FCI-601	PHYSICAL FIBER OPTIC DIAGRAM	FCI-664	CCTV MOUNTING DETAILS SHEET 5 OF 6
FCI-605	CABLE ROUTING DETAILS NEW SECURITY NODE HOUSE	FCI-665	CCTV MOUNTING DETAILS SHEET 6 OF 6
FCI-620	FIBER DROP SCHEMATIC GREEN'S FARMS STATION	FCI-666	SAGA BRIDGE CCTV MOUNTING DETAILS SHEET 1 OF 3
FCI-621	FIBER DROP SCHEMATIC SAGA BRIDGE WEST APPROACH	FCI-667	SAGA BRIDGE CCTV MOUNTING DETAILS SHEET 2 OF 3
FCI-622	FIBER DROP SCHEMATIC SAGA BRIDGE EAST APPROACH	FCI-668	SAGA BRIDGE CCTV MOUNTING DETAILS SHEET 3 OF 3
FCI-623	FIBER DROP SCHEMATIC WESTPORT STATION	FCI-670	CONDUIT DETAILS SHEET 1 OF 2
FCI-626	FIBER DROP SCHEMATIC SOUTH NORWALK STATION	FCI-671	CONDUIT DETAILS SHEET 2 OF 2
FCI-627	FIBER DROP SCHEMATIC ROWAYTON STATION	FCI-672	MISC. SITE DETAILS
FCI-629	FIBER DROP SCHEMATIC NOROTON HEIGHTS STATION	FCI-673	CABLE TRAY DETAILS
FCI-640	SAGA BRIDGE CCTV CABINETS		
FCI-641	CCTV CABINET AND FOUNDATION		
FCI-642	REMOTE SWITCH CABINET DETAILS		
FCI-643	REMOTE SWITCH CABINET MOUNTING DETAILS		
FCI-650	EXISTING CCTV SYSTEM HEAD-END		
FCI-651	MODIFIED CCTV SYSTEM HEAD-END SHEET 1 OF 2		
FCI-652	MODIFIED CCTV SYSTEM HEAD-END SHEET 2 OF 2		
FCI-653	EXISTING NETWORK ARCHITECTURE DIAGRAM		
FCI-654	NEW NETWORK ARCHITECTURE DIAGRAM		
FCI-655	HARTFORD LINE NETWORK BLOCK DIAGRAM		
FCI-656	CCO IT ROOM EQUIPMENT LAYOUT		
FCI-660	CCTV MOUNTING DETAILS SHEET 1 OF 6		
FCI-661	CCTV MOUNTING DETAILS SHEET 2 OF 6		
FCI-662	CCTV MOUNTING DETAILS SHEET 3 OF 6		
FCI-663	CCTV MOUNTING DETAILS SHEET 4 OF 6		

DESIGNED BY:
STV INCORPORATED
185 PLAINS ROAD, SUITE 208E
MILFORD, CT 06461

STV Incorporated
185 Plains Road
Suite 208E
Milford, CT 06461

Jim Sherwonit
2019.07.02
10:30:00-04'00'

REV.	DATE	REVISION DESCRIPTION	SHEET NO.

THE INFORMATION, INCLUDING ESTIMATED QUANTITIES OF WORK, SHOWN ON THESE SHEETS IS BASED ON LIMITED INVESTIGATIONS BY THE STATE AND IS IN NO WAY WARRANTED TO INDICATE THE CONDITIONS OF ACTUAL QUANTITIES OF WORK WHICH WILL BE REQUIRED.

Plotted Date: 6/11/2019

DESIGNER/DRAFTER: MC
CHECKED BY: TC
NOT TO SCALE

STATE OF CONNECTICUT
DEPARTMENT OF TRANSPORTATION

Filename: ...\IN-004_CNS_SHEET_0300-0202.dgn

SIGNATURE/BLOCK:
STV Incorporated
185 Plains Road
Suite 208E
Milford, CT 06461

PROJECT TITLE:
NETWORK INFRASTRUCTURE UPGRADE FOR SECURITY NEW HAVEN LINE PHASE 3

TOWN: STAMFORD TO WESTPORT

DRAWING TITLE: SCHEMATICS AND OTHER DETAILS INDEX OF DRAWINGS

PROJECT NO. 0300-0202
DRAWING NO. IN-004
SHEET NO. 04.01

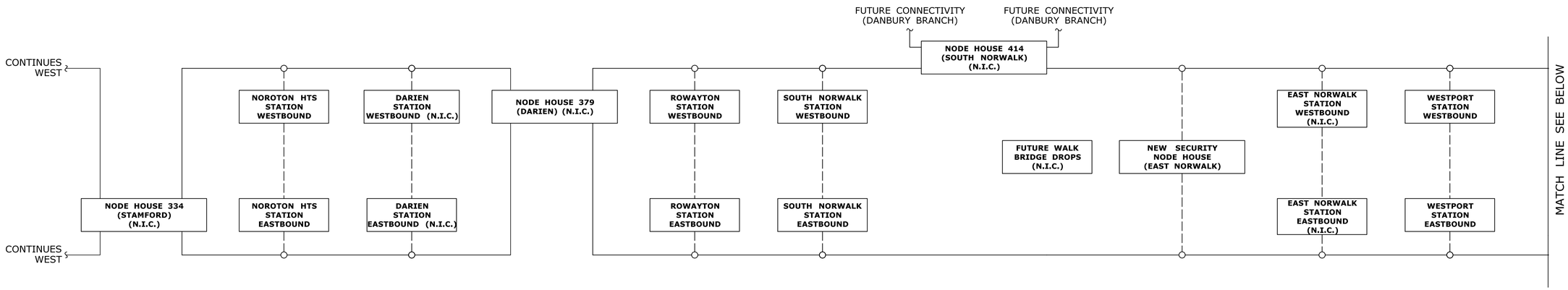

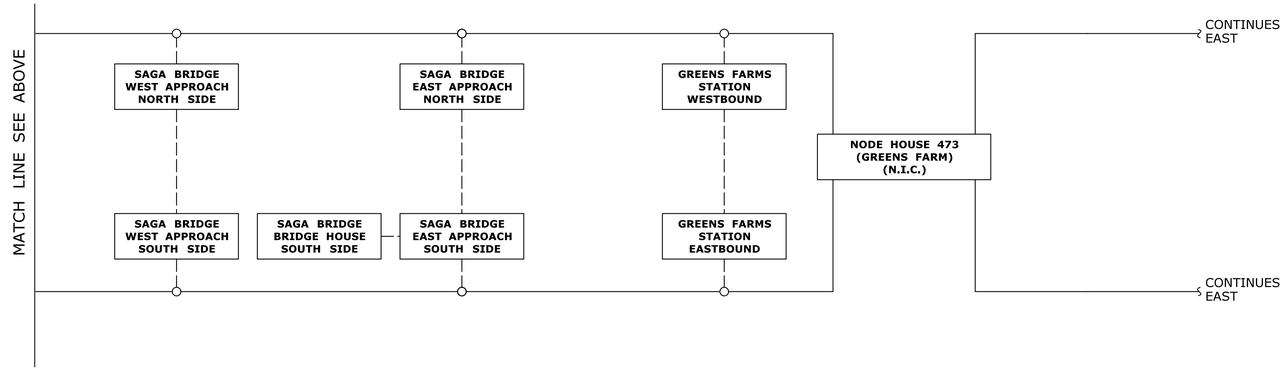

LEGEND

– – – 24-STRAND SMFO

——— 144-STRAND SMFO BY OTHERS

○ RING SPLICE BY MNR

NOTES:

1. DRAWING PROVIDES GENERAL OVERVIEW OF THE PHYSICAL LAYOUT OF PHASE 3 FIBER.

REV.	DATE	REVISION DESCRIPTION	SHEET NO.

THE INFORMATION, INCLUDING ESTIMATED QUANTITIES OF WORK, SHOWN ON THESE SHEETS IS BASED ON LIMITED INVESTIGATIONS BY THE STATE AND IS IN NO WAY WARRANTED TO INDICATE THE CONDITIONS OF ACTUAL QUANTITIES OF WORK WHICH WILL BE REQUIRED.

Plotted Date: 6/11/2019

DESIGNER/DRAFTER: JY/MC

CHECKED BY: TC

NOT TO SCALE

STATE OF CONNECTICUT
DEPARTMENT OF TRANSPORTATION

Filename: ...\FCI-601_CNS_Sheet_0300-0202.dgn

SIGNATURE/BLOCK:

STV Incorporated
185 Plains Road
Suite 208E
Milford, CT 06461

PROJECT TITLE:

NETWORK INFRASTRUCTURE UPGRADE FOR SECURITY NEW HAVEN LINE PHASE 3

TOWN: **STAMFORD TO WESTPORT**

DRAWING TITLE: **PHYSICAL FIBER OPTIC DIAGRAM**

PROJECT NO. **0300-0202**

DRAWING NO. **FCI-601**

SHEET NO. **04.02**

NOTES:

1. OTHER STRUCTURES AND OBJECTS PRESENT, NOT SHOWN FOR CLARITY.
2. RUN (1) 24-FIBER CABLE TO EACH SIDE OF NEW SECURITY NODE HOUSE FROM CAT. STRUCTURE 540.
3. LEAVE SLACK ON CAT. STRUCTURE FOR SPLICING BY MNR.
4. 1-1/2" CONDUIT CONTINUES UP CAT. STRUCTURE. REFER TO DWG. FCI-711 FOR CONDUIT ATTACHMENT DETAILS. PROVIDE 1-1/2" PVC COATED CONDUIT ACROSS CAT. STRUCTURE. SEE DETAIL X-2 ON DWG. FCI-712.
5. CONTRACTOR SHALL FURNISH SPLICE ENCLOSURE FOR SOUTH SIZE OF CAT. STRUCTURE TO MNR. FOR INSTALLATION.
6. SEE SUBSET 6 FOR NEW SECURITY NODE HOUSE DETAILS.

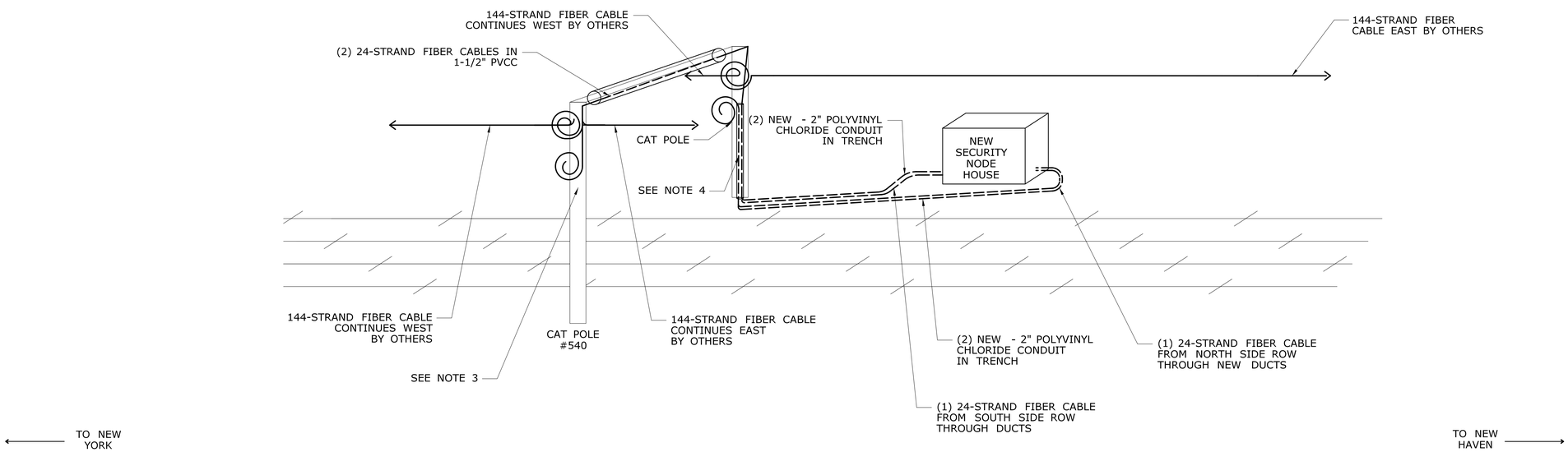

REV.	DATE	REVISION DESCRIPTION	SHEET NO.

THE INFORMATION, INCLUDING ESTIMATED QUANTITIES OF WORK, SHOWN ON THESE SHEETS IS BASED ON LIMITED INVESTIGATIONS BY THE STATE AND IS IN NO WAY WARRANTED TO INDICATE THE CONDITIONS OF ACTUAL QUANTITIES OF WORK WHICH WILL BE REQUIRED.

Plotted Date: 6/25/2019

DESIGNER/DRAFTER: JY

CHECKED BY: TC

NOT TO SCALE

STATE OF CONNECTICUT
DEPARTMENT OF TRANSPORTATION

Filename: ..\FCI-605_CNS_Sheet_0300-0202.dgn

SIGNATURE/BLOCK:

STV Incorporated
185 Plains Road
Suite 208E
Milford, CT 06461

PROJECT TITLE:

NETWORK INFRASTRUCTURE UPGRADE FOR SECURITY NEW HAVEN LINE PHASE 3

TOWN: **STAMFORD TO WESTPORT**

DRAWING TITLE: **CABLE ROUTING DETAILS NEW SECURITY NODE HOUSE**

PROJECT NO. **0300-0202**

DRAWING NO. **FCI-605**

SHEET NO. **04.03**

NOTES:

1. SEE DWG. FCI-501 FOR STATION LAYOUT.
2. OTHER STRUCTURES AND OBJECTS ARE PRESENT. NOT SHOWN FOR CLARITY.
3. CONTRACTOR SHALL FURNISH AND INSTALL (2) 24-FIBER CABLES. RUN (1) 24-FIBER CABLE TO WB CCTV CABINET AS SHOWN. LEAVE SLACK ON CATENARY STRUCTURE FOR SPLICING BY MNR. COIL OTHER CABLE ON NORTH SIDE OF CAT. 629
4. CONTRACTOR SHALL FURNISH AND INSTALL (2) 24-FIBER CABLES. RUN (1) 24-FIBER CABLE TO EB CCTV CABINET AS SHOWN. LEAVE SLACK ON CATENARY STRUCTURE FOR SPLICING BY MNR. COIL OTHER CABLE ON SOUTH SIDE OF CAT. 629
5. CONTRACTOR SHALL FURNISH AND INSTALL 24-FIBER CABLE BETWEEN EB AND WB CCTV CABINETS.
6. SEE CCTV CABINET MOUNTING DETAIL ON DRAWING FCI-641.
7. CONTRACTOR SHALL FURNISH SPLICE ENCLOSURES FOR NORTH SIDE AND SOUTH SIDE OF CAT. 629 TO MNR FOR INSTALLATION.

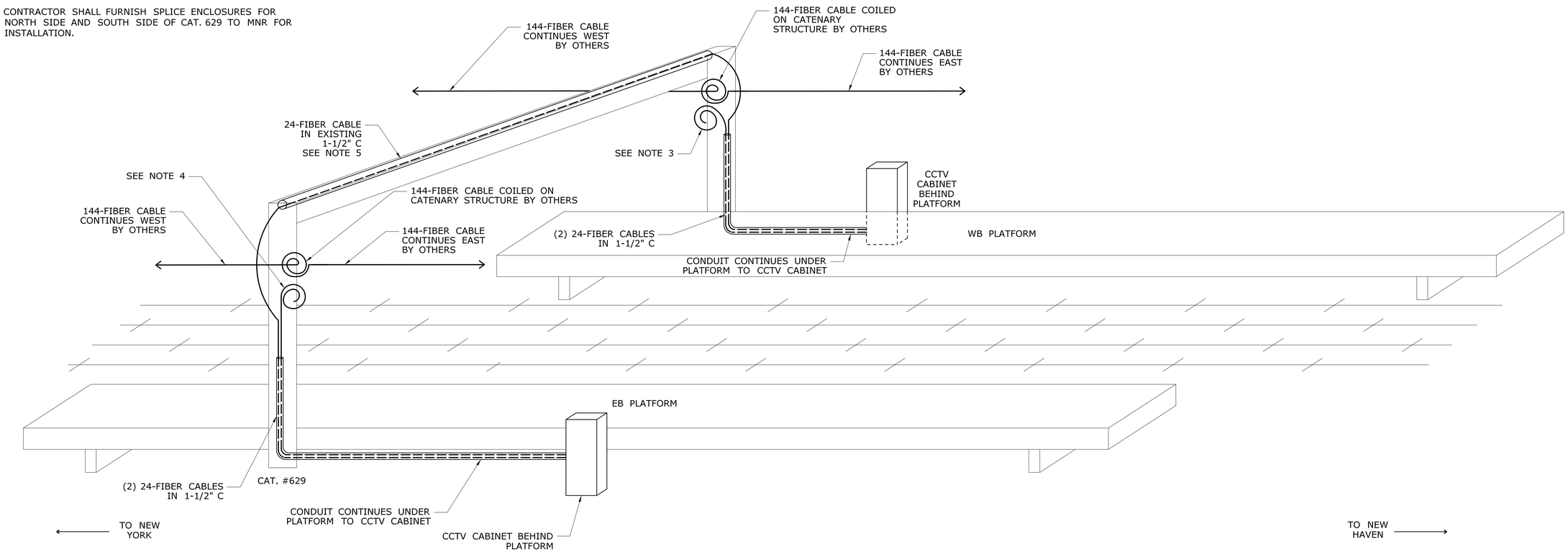

REV.	DATE	REVISION DESCRIPTION	SHEET NO.

THE INFORMATION, INCLUDING ESTIMATED QUANTITIES OF WORK, SHOWN ON THESE SHEETS IS BASED ON LIMITED INVESTIGATIONS BY THE STATE AND IS IN NO WAY WARRANTED TO INDICATE THE CONDITIONS OF ACTUAL QUANTITIES OF WORK WHICH WILL BE REQUIRED.

Plotted Date: 6/25/2019

DESIGNER/DRAFTER: JY/MC

CHECKED BY: TC

NOT TO SCALE

STATE OF CONNECTICUT
DEPARTMENT OF TRANSPORTATION

Filename: ...\FCI-620_FA_Sheet_0300-0202.dgn

SIGNATURE/BLOCK:

STV Incorporated
185 Plains Road
Suite 208E
Milford, CT 06461

PROJECT TITLE:

NETWORK INFRASTRUCTURE UPGRADE FOR SECURITY NEW HAVEN LINE PHASE 3

TOWN: **STAMFORD TO WESTPORT**

DRAWING TITLE: **FIBER DROP SCHEMATIC GREEN'S FARMS STATION**

PROJECT NO. **0300-0202**

DRAWING NO. **FCI-620**

SHEET NO. **04.04**

NOTES:

1. SEE DWG. FCI-510 FOR BRIDGE LAYOUT.
2. OTHER STRUCTURES AND OBJECTS ARE PRESENT. NOT SHOWN FOR CLARITY.
3. CONTRACTOR SHALL FURNISH AND INSTALL (2) 24-FIBER CABLES. RUN (1) 24-FIBER CABLE TO WEST APPROACH (NORTH) CCTV CABINET AS SHOWN. LEAVE SLACK ON CAT. STRUCTURE FOR SPLICING BY MNR. COIL OTHER CABLE ON NORTH SIDE OF CAT. 577.
4. CONTRACTOR SHALL FURNISH AND INSTALL (2) 24-FIBER CABLES. RUN (1) 24-FIBER CABLE TO WEST APPROACH (SOUTH) CCTV CABINET AS SHOWN. LEAVE SLACK ON CAT. STRUCTURE FOR SPLICING BY MNR. COIL OTHER CABLE ON SOUTH SIDE OF CAT. 577.
5. CONTRACTOR SHALL FURNISH AND INSTALL 24-FIBER CABLE BETWEEN WEST APPROACH (NORTH) AND WEST APPROACH (SOUTH) CABINETS.
6. SEE CCTV CABINET MOUNTING DETAIL ON DRAWING FCI-640.
7. CONTRACTOR SHALL FURNISH SPLICE EMCLOSURES FOR NORTH SIDE AND SOUTH SIDE OF CAT. 577 TO MNR FOR INSTALLATION.

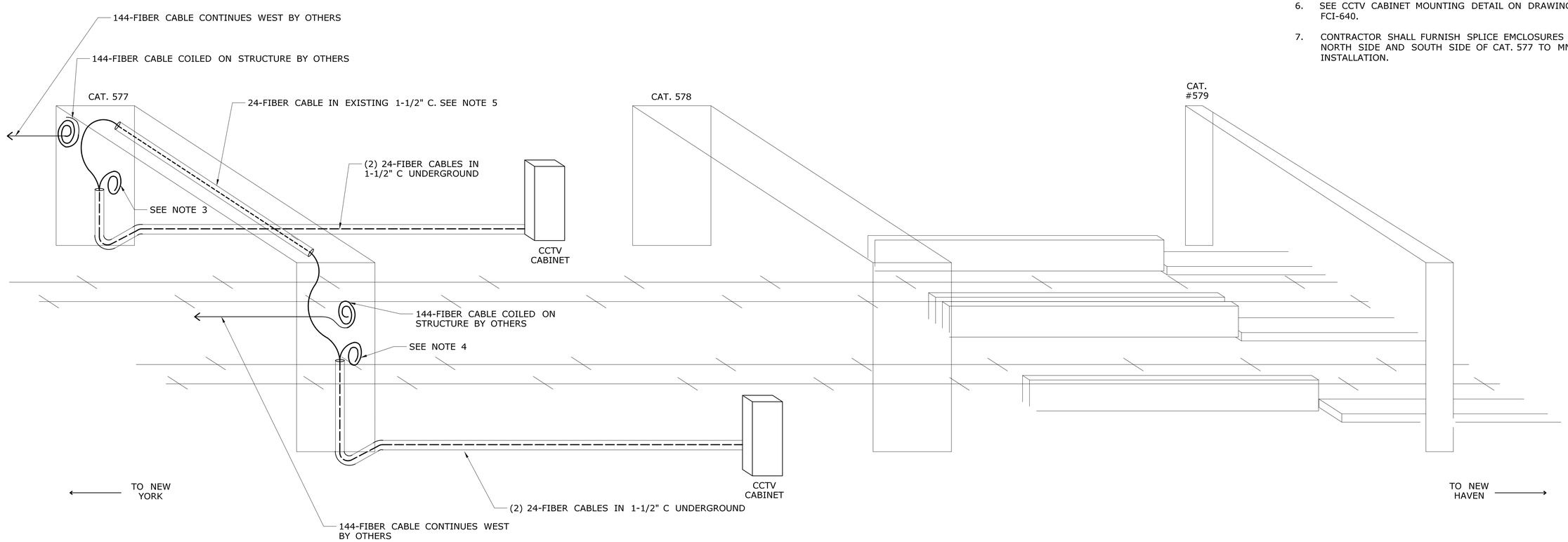

REV.	DATE	REVISION DESCRIPTION	SHEET NO.

THE INFORMATION, INCLUDING ESTIMATED QUANTITIES OF WORK, SHOWN ON THESE SHEETS IS BASED ON LIMITED INVESTIGATIONS BY THE STATE AND IS IN NO WAY WARRANTED TO INDICATE THE CONDITIONS OF ACTUAL QUANTITIES OF WORK WHICH WILL BE REQUIRED.

Plotted Date: 6/24/2019

DESIGNER/DRAFTER: JY

CHECKED BY: TC

NOT TO SCALE

STATE OF CONNECTICUT
DEPARTMENT OF TRANSPORTATION

Filename: ...\FCI-621_FA_Sheet_0300-0202.dgn

SIGNATURE/BLOCK:

STV Incorporated
185 Plains Road
Suite 208E
Milford, CT 06461

PROJECT TITLE:

NETWORK INFRASTRUCTURE UPGRADE FOR SECURITY NEW HAVEN LINE PHASE 3

TOWN: **STAMFORD TO WESTPORT**

DRAWING TITLE: **FIBER DROP SCHEMATIC SAGA BRIDGE WEST APPROACH**

PROJECT NO. **0300-0202**

DRAWING NO. **FCI-621**

SHEET NO. **04.05**

NOTES:

1. SEE DWG. FCI-510 FOR BRIDGE LAYOUT.
2. OTHER STRUCTURES AND OBJECTS ARE PRESENT. NOT SHOWN FOR CLARITY.
3. CONTRACTOR SHALL FURNISH AND INSTALL (2) 24-FIBER CABLES. RUN (1) 24-FIBER CABLE TO EAST APPROACH (NORTH) CCTV CABINET AS SHOWN. LEAVE SLACK ON CAT. STRUCTURE FOR SPLICING BY MNR. COIL OTHER CABLE ON NORTH SIDE OF CAT 580.
4. CONTRACTOR SHALL FURNISH AND INSTALL (2) 24-FIBER CABLES. RUN (1) 24-FIBER CABLE TO EAST APPROACH (SOUTH) CCTV CABINET AS SHOWN. LEAVE SLACK ON CAT. STRUCTURE FOR SPLICING BY MNR. COIL OTHER CABLE ON SOUTH SIDE OF CAT 580.
5. CONTRACTOR SHALL FURNISH AND INSTALL 24-FIBER CABLE BETWEEN EAST APPROACH (NORTH) AND EAST APPROACH (SOUTH) CABINETS.
6. SEE CCTV CABINET MOUNTING DETAIL ON DRAWING FCI-640.
7. CONTRACTOR SHALL FURNISH SPLICE ENCLOSURES FOR NORTH SIDE AND SOUTH SIDE OF CAT. 580 TO MNR FOR INSTALLATION.
8. FIBER TO BRIDGE HOUSE NOT SHOWN. REFER TO BRIDGE LAYOUT FOR DETAILS.
9. REFER TO DWG. FCI-515 FOR AERIAL PLAN AT SAGA BRIDGE.

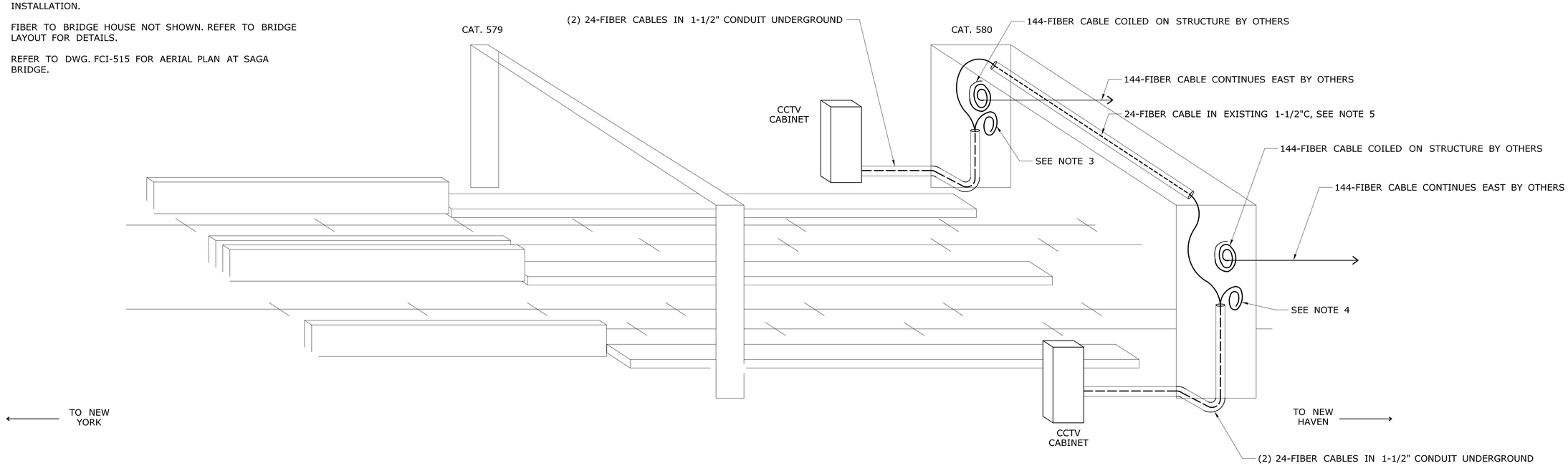

REV.	DATE	REVISION DESCRIPTION	SHEET NO.

THE INFORMATION, INCLUDING ESTIMATED QUANTITIES OF WORK, SHOWN ON THESE SHEETS IS BASED ON LIMITED INVESTIGATIONS BY THE STATE AND IS IN NO WAY WARRANTED TO INDICATE THE CONDITIONS OF ACTUAL QUANTITIES OF WORK WHICH WILL BE REQUIRED.

Plotted Date: 6/25/2019

DESIGNER/DRAFTER: JY
CHECKED BY: TC
NOT TO SCALE

STATE OF CONNECTICUT
DEPARTMENT OF TRANSPORTATION

Filename: ...\FCI-622_FA_Sheet_0300-0202.dgn

SIGNATURE/BLOCK:

STV Incorporated
185 Plains Road
Suite 208E
Milford, CT 06461

PROJECT TITLE:
NETWORK INFRASTRUCTURE UPGRADE FOR SECURITY NEW HAVEN LINE PHASE 3

TOWN: STAMFORD TO WESTPORT

DRAWING TITLE: FIBER DROP SCHEMATIC SAGA BRIDGE EAST APPROACH

PROJECT NO. 0300-0202
DRAWING NO. FCI-622
SHEET NO. 04.06

NOTES:

1. SEE DWG. FCI-520 AND FCI-521 FOR STATION LAYOUT.
2. OTHER STRUCTURES AND OBJECTS ARE PRESENT. NOT SHOWN FOR CLARITY.
3. CONTRACTOR SHALL FURNISH AND INSTALL (2) 24-FIBER CABLES. RUN (1) 24-FIBER CABLE TO WB CCTV CABINET AS SHOWN. LEAVE SLACK ON CAT. STRUCTURE FOR SPLICING BY MNR. COIL OTHER CABLE ON NORTH SIDE OF CAT. 574.
4. CONTRACTOR SHALL FURNISH AND INSTALL (2) 24-FIBER CABLES. RUN (1) 24-FIBER CABLE TO EB CCTV CABINET AS SHOWN. LEAVE SLACK ON CAT. STRUCTURE FOR SPLICING BY MNR. COIL OTHER CABLE ON SOUTH SIDE OF CAT. 574.
5. CONTRACTOR SHALL FURNISH AND INSTALL 24-FIBER CABLE BETWEEN EB AND WB CCTV CABINETS.
6. DIAGRAM EXCLUDES FIBER TO REMOTE SWITCH CABINETS. SEE STATION LAYOUT FOR DETAILS.
7. SEE CCTV CABINET MOUNTING DETAIL ON DRAWING FCI-641.
8. CONTRACTOR SHALL FURNISH AND INSTALL (2) 24-FIBER CABLES FROM WESTPORT CUSTODIAN OFFICE TO CAT. 574. SLACK SHALL BE COILED ON NORTH SIDE AND SOUTH SIDE OF CAT. 574 FOR CONNECTION BY OTHERS.
9. CONTRACTOR SHALL FURNISH SPLICE ENCLOSURES FOR NORTH SIDE AND SOUTH SIDE OF CAT. 574 TO MNR FOR INSTALLATION.

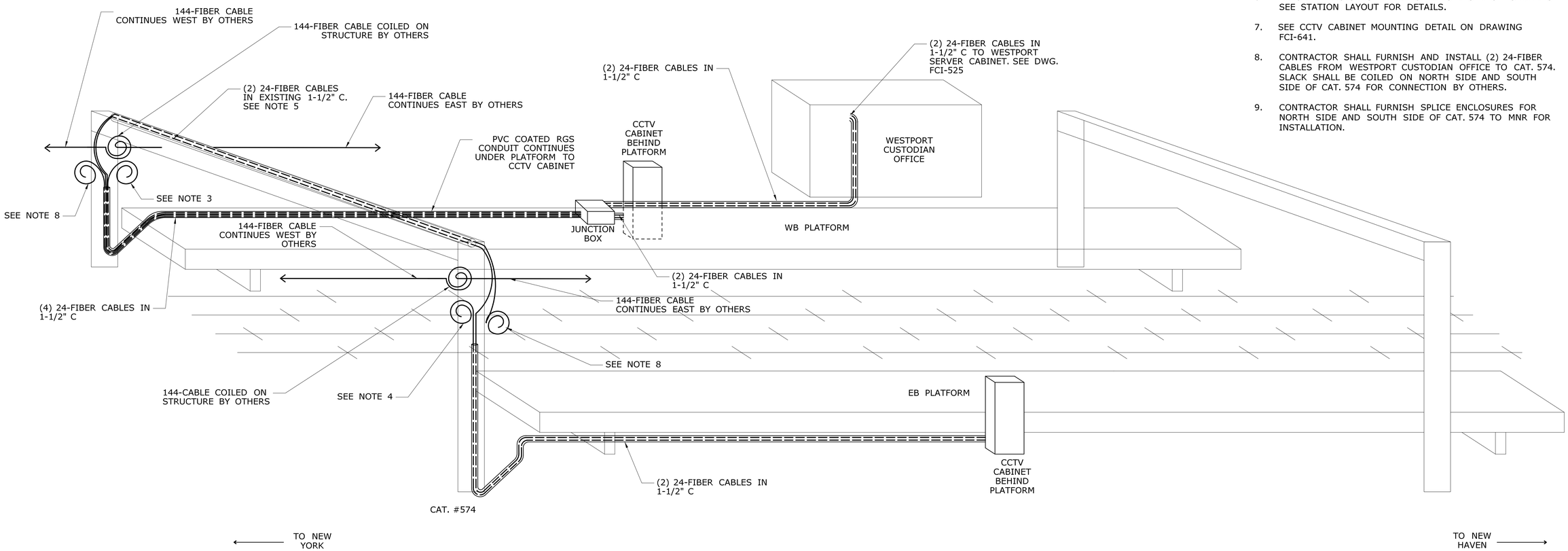

REV.	DATE	REVISION DESCRIPTION	SHEET NO.

THE INFORMATION, INCLUDING ESTIMATED QUANTITIES OF WORK, SHOWN ON THESE SHEETS IS BASED ON LIMITED INVESTIGATIONS BY THE STATE AND IS IN NO WAY WARRANTED TO INDICATE THE CONDITIONS OF ACTUAL QUANTITIES OF WORK WHICH WILL BE REQUIRED.

Plotted Date: 6/24/2019

DESIGNER/DRAFTER: JY/MC

CHECKED BY: TC

NOT TO SCALE

STATE OF CONNECTICUT
DEPARTMENT OF TRANSPORTATION

Filename: ...\FCI-623_FA_Sheet_0300-0202.dgn

SIGNATURE/BLOCK:

STV Incorporated
185 Plains Road
Suite 208E
Milford, CT 06461

PROJECT TITLE:

NETWORK INFRASTRUCTURE UPGRADE FOR SECURITY NEW HAVEN LINE PHASE 3

TOWN: **STAMFORD TO WESTPORT**

DRAWING TITLE: **FIBER DROP SCHEMATIC WESTPORT STATION**

PROJECT NO. 0300-0202

DRAWING NO. FCI-623

SHEET NO. 04.07

NOTES:

1. SEE DWG. FCI-540 AND FCI-541 FOR STATION LAYOUT.
2. OTHER STRUCTURES AND OBJECTS ARE PRESENT. NOT SHOWN FOR CLARITY.
3. CONTRACTOR SHALL FURNISH AND INSTALL (2) 24-FIBER CABLES. RUN (1) 24-FIBER CABLE TO WB CCTV CABINET AS SHOWN. LEAVE SLACK ON CAT. STRUCTURE FOR SPLICING BY MNR. COIL OTHER CABLE ON NORTH SIDE OF CAT 519A.
4. CONTRACTOR SHALL FURNISH AND INSTALL (2) 24-FIBER CABLES. RUN (1) 24-FIBER CABLE TO EB CCTV CABINET AS SHOWN. LEAVE SLACK ON CAT. STRUCTURE FOR SPLICING BY MNR. COIL OTHER CABLE ON SOUTH SIDE OF CAT. 519.
5. CONTRACTOR SHALL FURNISH AND INSTALL 24-FIBER CABLE BETWEEN EB AND WB CCTV CABINETS.
6. DIAGRAM EXCLUDES FIBER TO REMOTE SWITCH CABINETS. SEE STATION LAYOUT FOR DETAILS.
7. SEE CCTV CABINET MOUNTING DETAIL ON DRAWING FCI-641.
8. CONTRACTOR SHALL FURNISH SPLICE ENCLOSURES FOR NORTH SIDE OF CAT. 519A AND SOUTH SIDE OF CAT. 519 TO MNR FOR INSTALLATION.

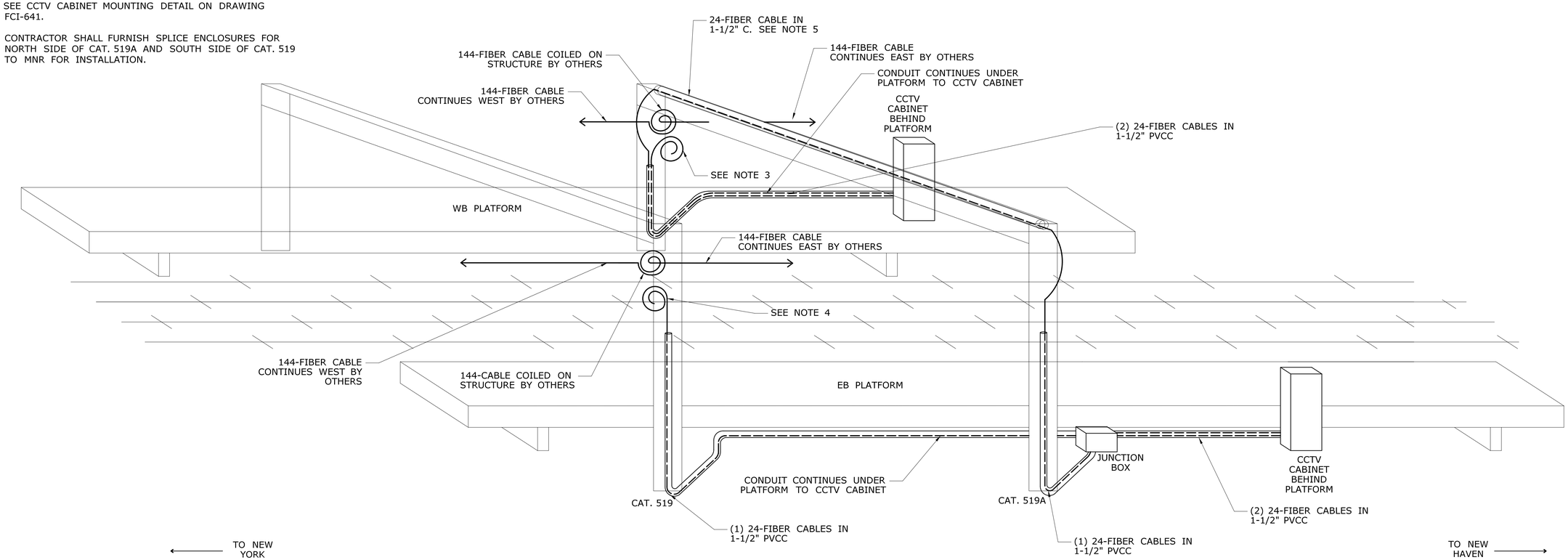

REV.	DATE	REVISION DESCRIPTION	SHEET NO.

THE INFORMATION, INCLUDING ESTIMATED QUANTITIES OF WORK, SHOWN ON THESE SHEETS IS BASED ON LIMITED INVESTIGATIONS BY THE STATE AND IS IN NO WAY WARRANTED TO INDICATE THE CONDITIONS OF ACTUAL QUANTITIES OF WORK WHICH WILL BE REQUIRED.

Plotted Date: 6/25/2019

DESIGNER/DRAFTER: JY

CHECKED BY: TC

NOT TO SCALE

STATE OF CONNECTICUT
DEPARTMENT OF TRANSPORTATION

Filename: ...\FCI-626_FA_Sheet_0300-0202.dgn

SIGNATURE/BLOCK:

STV Incorporated
185 Plains Road
Suite 208E
Milford, CT 06461

PROJECT TITLE:

NETWORK INFRASTRUCTURE UPGRADE FOR SECURITY NEW HAVEN LINE PHASE 3

TOWN: **STAMFORD TO WESTPORT**

DRAWING TITLE: **FIBER DROP SCHEMATIC SOUTH NORWALK STATION**

PROJECT NO. 0300-0202

DRAWING NO. FCI-626

SHEET NO. 04.08

NOTES:

1. SEE DWG. FCI-550 AND FCI-551 FOR STATION LAYOUT.
2. OTHER STRUCTURES AND OBJECTS ARE PRESENT. NOT SHOWN FOR CLARITY.
3. CONTRACTOR SHALL FURNISH AND INSTALL (2) 24-FIBER CABLES. RUN (1) 24-FIBER CABLE TO WB CCTV CABINET AS SHOWN. LEAVE SLACK ON CAT. STRUCTURE FOR SPLICING BY MNR. COIL OTHER CABLE ON NORTH SIDE OF CAT. 488.
4. CONTRACTOR SHALL FURNISH AND INSTALL (2) 24-FIBER CABLES. RUN (1) 24-FIBER CABLE TO EB CCTV CABINET AS SHOWN. LEAVE SLACK ON CAT. STRUCTURE FOR SPLICING BY MNR. COIL OTHER CABLE ON SOUTH SIDE OF CAT. 488.
5. CONTRACTOR SHALL FURNISH AND INSTALL 24-FIBER CABLE BETWEEN EB AND WB CCTV CABINETS.
6. SEE CCTV CABINET MOUNTING DETAIL ON DRAWING FCI-641.
7. CONTRACTOR SHALL FURNISH SPLICE ENCLOSURES FOR NORTH SIDE AND SOUTH SIDE OF CAT. 488 TO MNR FOR INSTALLATION.

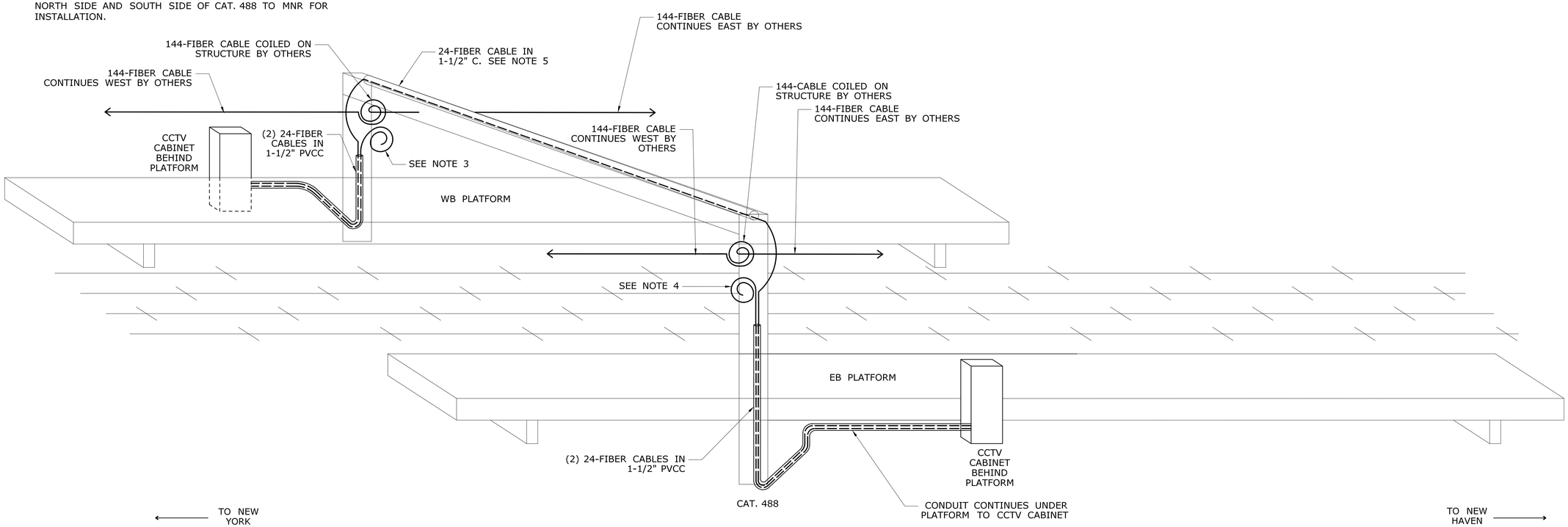

REV.	DATE	REVISION DESCRIPTION	SHEET NO.

THE INFORMATION, INCLUDING ESTIMATED QUANTITIES OF WORK, SHOWN ON THESE SHEETS IS BASED ON LIMITED INVESTIGATIONS BY THE STATE AND IS IN NO WAY WARRANTED TO INDICATE THE CONDITIONS OF ACTUAL QUANTITIES OF WORK WHICH WILL BE REQUIRED.

Plotted Date: 6/25/2019

DESIGNER/DRAFTER: EN/GH

CHECKED BY: CH

NOT TO SCALE

STATE OF CONNECTICUT
DEPARTMENT OF TRANSPORTATION

Filename: ...\FCI-627_FA_Sheet_0300-0202.dgn

SIGNATURE/ BLOCK:

STV Incorporated
185 Plains Road
Suite 208E
Milford, CT 06461

PROJECT TITLE:

NETWORK INFRASTRUCTURE UPGRADE FOR SECURITY NEW HAVEN LINE PHASE 3

TOWN: **STAMFORD TO WESTPORT**

DRAWING TITLE: **FIBER DROP SCHEMATIC ROWAYTON STATION**

PROJECT NO. 0300-0202

DRAWING NO. FCI-627

SHEET NO. 04.09

NOTES:

1. SEE DWG. FCI-570 AND FCI-571 FOR STATION LAYOUT.
2. OTHER STRUCTURES AND OBJECTS ARE PRESENT. NOT SHOWN FOR CLARITY.
3. CONTRACTOR SHALL FURNISH AND INSTALL (2) 24-FIBER CABLES. RUN (1) 24-FIBER CABLE TO WB CCTV CABINET AS SHOWN. LEAVE SLACK ON CAT. STRUCTURE FOR SPLICING BY MNR. COIL OTHER CABLE ON NORTH SIDE OF CAT. 436.
4. CONTRACTOR SHALL FURNISH AND INSTALL (2) 24-FIBER CABLES. RUN (1) 24-FIBER CABLE TO EB CCTV CABINET AS SHOWN. LEAVE SLACK ON CAT. STRUCTURE FOR SPLICING BY MNR. COIL OTHER CABLE ON SOUTH SIDE OF CAT. 436.
5. CONTRACTOR SHALL FURNISH AND INSTALL 24-FIBER CABLE BETWEEN EB AND WB CCTV CABINETS.
6. DIAGRAM EXCLUDES FIBER TO REMOTE SWITCH CABINETS. SEE STATION LAYOUT FOR DETAILS.
7. SEE CCTV CABINET MOUNTING DETAIL ON DRAWING FCI-641.
8. CONTRACTOR SHALL FURNISH SPLICE ENCLOSURES FOR NORTH SIDE AND SOUTH SIDE OF CAT. 436 TO MNR FOR INSTALLATION.

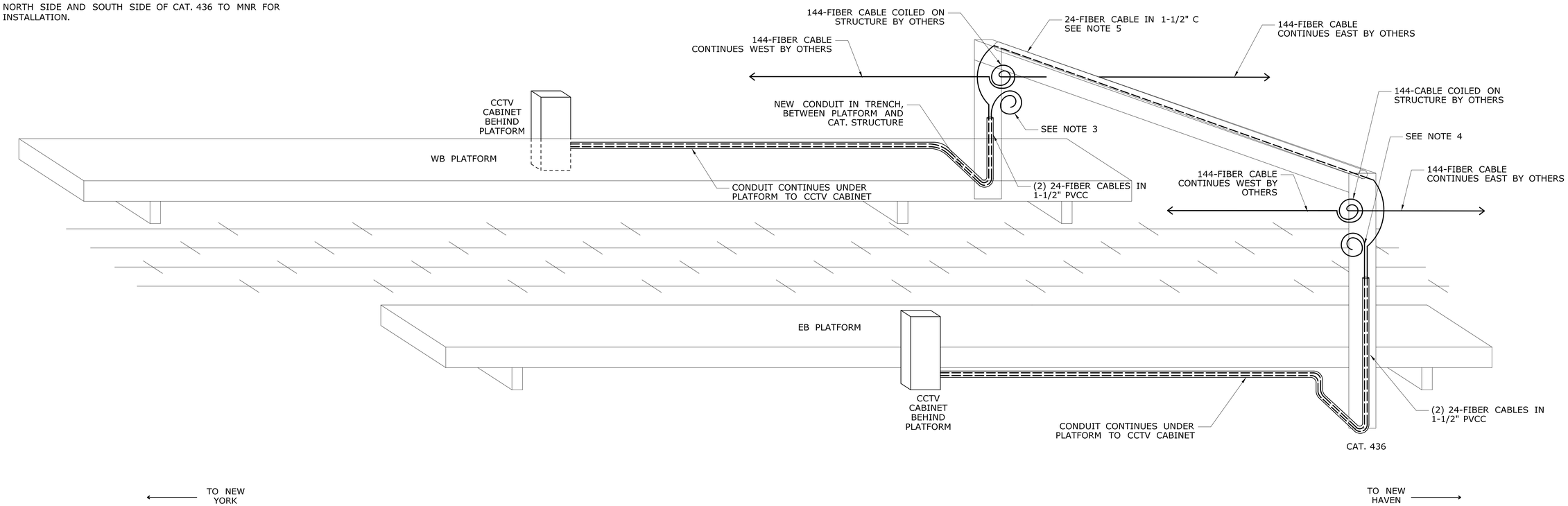

REV.	DATE	REVISION DESCRIPTION	SHEET NO.

THE INFORMATION, INCLUDING ESTIMATED QUANTITIES OF WORK, SHOWN ON THESE SHEETS IS BASED ON LIMITED INVESTIGATIONS BY THE STATE AND IS IN NO WAY WARRANTED TO INDICATE THE CONDITIONS OF ACTUAL QUANTITIES OF WORK WHICH WILL BE REQUIRED.

Plotted Date: 6/25/2019

DESIGNER/DRAFTER: EN/GH

CHECKED BY: CH

NOT TO SCALE

STATE OF CONNECTICUT
DEPARTMENT OF TRANSPORTATION

Filename: ...\FCI-629_FA_Sheet_0300-0202.dgn

SIGNATURE/ BLOCK:

STV Incorporated
185 Plains Road
Suite 208E
Milford, CT 06461

PROJECT TITLE:

NETWORK INFRASTRUCTURE UPGRADE FOR SECURITY NEW HAVEN LINE PHASE 3

TOWN: **STAMFORD TO WESTPORT**

DRAWING TITLE: **FIBER DROP SCHEMATIC NOROTON HEIGHTS STATION**

PROJECT NO. **0300-0202**

DRAWING NO. **FCI-629**

SHEET NO. **04.10**

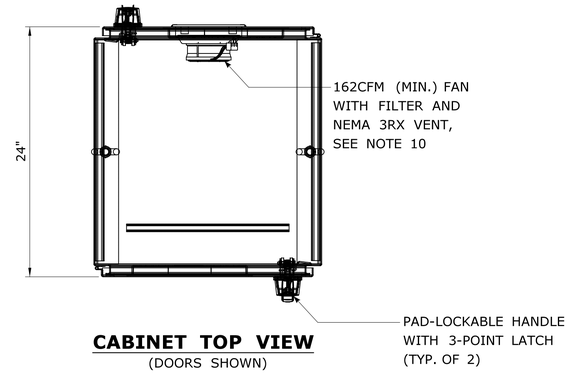

CABINET TOP VIEW
(DOORS SHOWN)

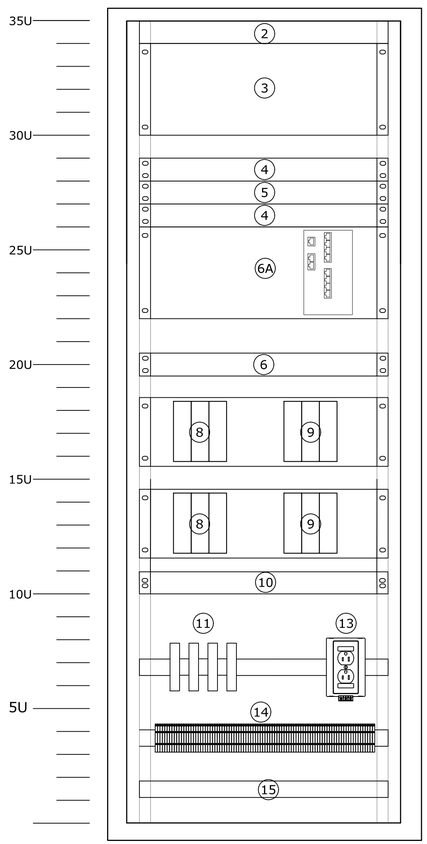

CABINET INTERIOR
(ENLARGED, DOOR REMOVED)

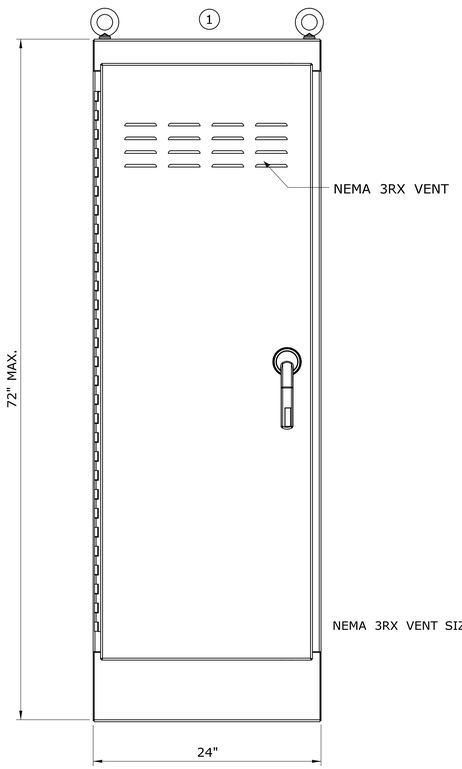

CABINET FRONT VIEW
(DOOR SHOWN)

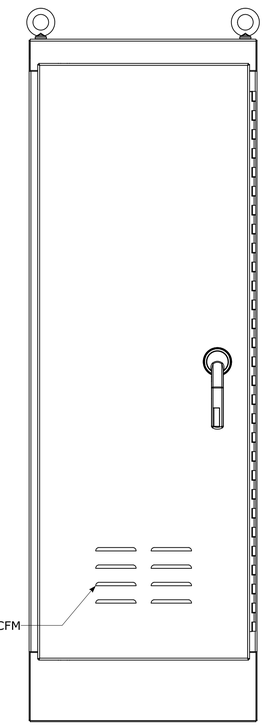

CABINET REAR VIEW
(DOOR SHOWN)

1
FCI-640

SAGA BRIDGE CCTV CABINET
NOT TO SCALE

PARTS LIST
SEE NOTE 3

ITEM NO.	QTY.	DESCRIPTION
1	1	NEMA TYPE 3RX CABINET
2	2	LED STRIP LIGHT
3	1	72-PORT FIBER OPTIC PATCH PANEL WITH SPLICE TRAYS
4	AS NEEDED	CABLE MANAGEMENT PANELS
5	AS NEEDED	POE SURGE SUPPRESSION - RACK MOUNT
6	AS NEEDED	CISCO IE5000 POE NETWORK SWITCH
6A	AS NEEDED	CISCO IE3200 POE NETWORK SWITCH
7	1	170W CISCO POWER SUPPLY (NOT SHOWN, SEE NOTE 6)
8	AS NEEDED	60W POE INJECTOR
9	AS NEEDED	PTZ POWER SUPPLY
10	1	IR POE INJECTOR - 12 PORT
11	AS REQUIRED	CIRCUIT BREAKERS
12	1	POWER SURGE SUPPRESSION (NOT SHOWN)
13	1	GFCI DUPLEX CONVENIENCE OUTLET WITH COVER
14	AS NEEDED	TERMINAL BLOCKS
15	1	GROUND BUS BAR
16	1	500W FAN HEATER (NOT SHOWN, SEE NOTE 10)
17	2	ADJUSTABLE THERMOSTAT (NOT SHOWN)
18	2	TAMPER SWITCH (NOT SHOWN)
19	2	DOOR SWITCH FOR LIGHTS (NOT SHOWN, SEE NOTE 8)

NOTES:

1. GROUND ALL NEW RACKS AND CABINETS.
2. INSTALL 6" CAST-IN-PLACE CONCRETE FOUNDATION. SEE DETAIL 3 ON DWG. FCI-641.
3. DRAWING DEPICTS TYPICAL PARTS REQUIRED FOR CCTV FIELD CABINET ENCLOSURES. REFER TO SPECIAL PROVISIONS FOR ADDITIONAL REQUIREMENTS. CONTRACTOR SHALL SUBMIT FINAL CABINET LAYOUTS, MOUNTING DETAILS, AND WIRING DIAGRAMS FOR APPROVAL BY THE ENGINEER.
4. EQUIPMENT WITHIN THE ENCLOSURE SHALL BE CLEARLY LABELED. PROVIDE DRAWING POCKET WITH COMPLETE, APPROVED WIRING DIAGRAMS WITHIN ENCLOSURE.
5. COORDINATE DOOR SWINGS WITH SURROUNDING AREA.
6. MOUNT CISCO SWITCH POWER SUPPLIES (NOT SHOWN) IN REAR OF CABINET, BEHIND CISCO SWITCHES.
7. FURNISH AND INSTALL ALL MOUNTING BRACKETS, HARDWARE, OFFSETS, ETC. REQUIRED TO INSTALL THE EQUIPMENT. ENSURE PROPER CLEARANCE IS PROVIDED BETWEEN DOORS AND EQUIPMENT FOR CABLING. PROVIDE OFFSET BRACKETS AS NECESSARY FOR PROPER INSTALLATION.
8. PROVIDE DOOR SWITCHES TO CONTROL LIGHTS.
9. CABINET SHALL INCLUDE A COMPLETE CABLE MANAGEMENT SYSTEM TO CONTROL CABLE BEND RADIUS, PROTECT CABLING, PROVIDE AND MANAGE CABLE SLACK, PROVIDE CABLE STRAIN RELIEF, AND PROVIDE A NEAT AND WORKMANLIKE APPEARANCE.
10. REFER TO SPECIAL PROVISIONS FOR ADDITIONAL HEATING AND VENTILATION REQUIREMENTS.

REV.	DATE	REVISION DESCRIPTION	SHEET NO.

THE INFORMATION, INCLUDING ESTIMATED QUANTITIES OF WORK, SHOWN ON THESE SHEETS IS BASED ON LIMITED INVESTIGATIONS BY THE STATE AND IS IN NO WAY WARRANTED TO INDICATE THE CONDITIONS OF ACTUAL QUANTITIES OF WORK WHICH WILL BE REQUIRED.

Plotted Date: 6/11/2019

DESIGNER/DRAFTER: JY/RL
CHECKED BY: TC
NOT TO SCALE

STATE OF CONNECTICUT
DEPARTMENT OF TRANSPORTATION

Filename: ...\FCI-640_CNS_Sheet_0300-0178.dgn

SIGNATURE/BLOCK:
STV Incorporated
185 Plains Road
Suite 208E
Milford, CT 06461

PROJECT TITLE:
NETWORK INFRASTRUCTURE UPGRADE FOR SECURITY NEW HAVEN LINE PHASE 3

TOWN: **STAMFORD TO WESTPORT**

DRAWING TITLE: **SAGA BRIDGE CCTV CABINETS**

PROJECT NO. 0300-0202
DRAWING NO. FCI-640
SHEET NO. 04.11

PARTS LIST

SEE NOTE 3

ITEM NO.	QTY.	DESCRIPTION
1	1	NEMA TYPE 4X CABINET
2	2	LED STRIP LIGHT
3	1	72-PORT FIBER OPTIC PATCH PANEL WITH SPLICE TRAYS
4	AS NEEDED	CABLE MANAGEMENT PANELS
5	1-2	POE SURGE SUPPRESSION - RACK MOUNT
6	1	CISCO IE5000 POE NETWORK SWITCH
6A	AS NEEDED	CISCO IE3200 POE NETWORK SWITCH
7	1-2	170W CISCO POWER SUPPLY (NOT SHOWN, SEE NOTE 6)
8	1	60W POE INJECTOR
9	1	PTZ POWER SUPPLY
10	AS REQUIRED	CIRCUIT BREAKERS
11	1	POWER SURGE SUPPRESSION (NOT SHOWN)
12	1	GFCI DUPLEX CONVENIENCE OUTLET WITH COVER
13	AS NEEDED	TERMINAL BLOCKS
14	1	GROUND BUS BAR
15	2	TAMPER SWITCH (NOT SHOWN)
16	2	DOOR SWITCH FOR LIGHT (NOT SHOWN, SEE NOTE 8)

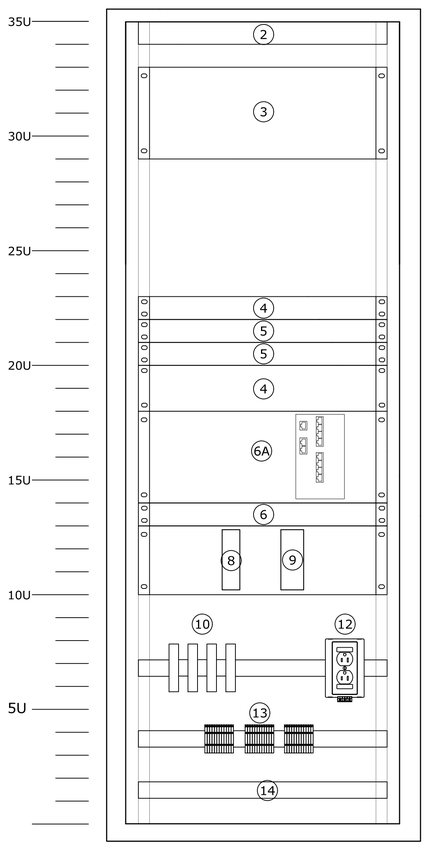

CABINET INTERIOR
(ENLARGED, DOOR REMOVED)

1 FCI-641 **BASE-MOUNT CCTV CABINET**
NOT TO SCALE

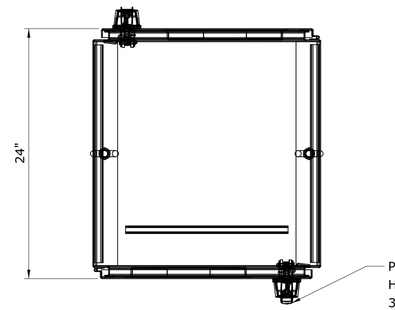

CABINET TOP VIEW
(DOORS SHOWN)

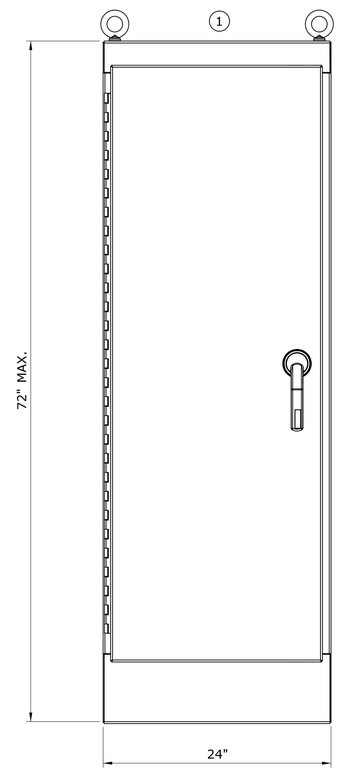

CABINET FRONT VIEW
(DOOR SHOWN)

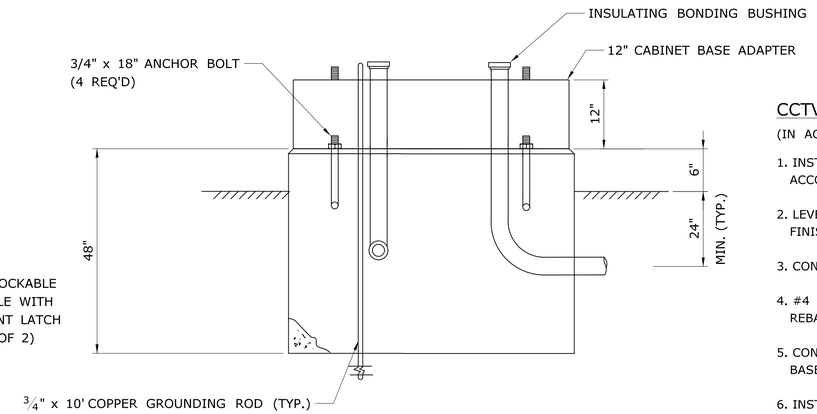

3 FCI-641 **CAST-IN-PLACE FOUNDATION**
NOT TO SCALE

CCTV CABINET FOUNDATION AND PAD NOTES:

(IN ACCORDANCE WITH CONNECTICUT DOT STANDARD DETAIL)

1. INSTALL FOUNDATION ON 6" COMPACTED GRAVEL, IN ACCORDANCE WITH CONNECTICUT DOT SECTION 2.14.
2. LEVEL FOUNDATION OR PAD WITH A PROJECTION OF 6" ABOVE FINISHED GRADE.
3. CONCRETE: CLASS "F" CONFORMING TO ARTICLE M.03.02.
4. #4 RE-BAR 2" MIN. COVER AROUND ALL OPENINGS. 3 - #4 REBARS IN EACH CORNER.
5. CONDUITS SHALL NOT PROJECT MORE THAN 2" ABOVE CABINET BASE ADAPTOR.
6. INSTALL A MINIMUM OF ONE SPARE 2" CONDUITS IN THE FOUNDATION OR PAD. SPARE CONDUITS SHALL EXTEND A MINIMUM OF 24" OUTSIDE THE FOUNDATION OR PAD.

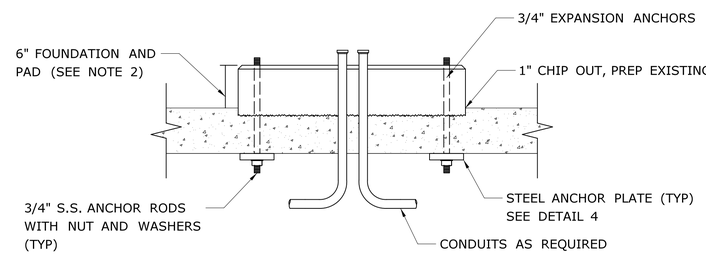

2 FCI-641 **PLATFORM PAD DETAIL**
NOT TO SCALE

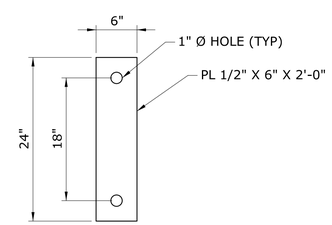

4 FCI-641 **ANCHOR PLATE**
NOT TO SCALE

NOTES:

1. GROUND ALL NEW RACKS AND CABINETS. REFER TO CT DOT FORM 817 FOR ADDITIONAL REQUIREMENTS.
2. INSTALL 6" CABINET FOUNDATION PAD WHERE CCTV CABINET IS INSTALLED ON STATION PLATFORMS. USE CAST-IN-PLACE CONCRETE FOUNDATION WHERE INSTALLED AT GRADE.
3. DRAWING DEPICTS TYPICAL PARTS REQUIRED FOR CCTV FIELD CABINET ENCLOSURES. REFER TO SPECIAL PROVISIONS AND CT DOT FORM 817 FOR ADDITIONAL REQUIREMENTS. CONTRACTOR SHALL SUBMIT FINAL CABINET LAYOUTS, MOUNTING DETAILS, AND WIRING DIAGRAMS FOR APPROVAL BY THE ENGINEER.
4. EQUIPMENT WITHIN THE ENCLOSURE SHALL BE CLEARLY LABELED. PROVIDE DRAWING POCKET WITH COMPLETE, APPROVED WIRING DIAGRAMS WITHIN ENCLOSURE.
5. COORDINATE DOOR SWINGS WITH SURROUNDING AREA.
6. MOUNT CISCO SWITCH POWER SUPPLIES FOR IE1000 SWITCHES (NOT SHOWN) IN REAR OF CABINET, BEHIND CISCO SWITCHES.
7. FURNISH AND INSTALL ALL MOUNTING BRACKETS, HARDWARE, OFFSETS, ETC. REQUIRED TO INSTALL THE EQUIPMENT. ENSURE PROPER CLEARANCE IS PROVIDED BETWEEN DOORS AND EQUIPMENT FOR CABLING. PROVIDE OFFSET DIN-RAIL BRACKETS AS NECESSARY FOR PROPER INSTALLATION.
8. PROVIDE DOOR SWITCHES TO CONTROL LIGHTS.
9. CABINET SHALL INCLUDE A COMPLETE CABLE MANAGEMENT SYSTEM TO CONTROL CABLE BEND RADIUS, PROTECT CABLING, PROVIDE AND MANAGE CABLE SLACK, PROVIDE CABLE STRAIN RELIEF, AND PROVIDE A NEAT AND WORKMANLIKE APPEARANCE.

REV.	DATE	REVISION DESCRIPTION	SHEET NO.

THE INFORMATION, INCLUDING ESTIMATED QUANTITIES OF WORK, SHOWN ON THESE SHEETS IS BASED ON LIMITED INVESTIGATIONS BY THE STATE AND IS IN NO WAY WARRANTED TO INDICATE THE CONDITIONS OF ACTUAL QUANTITIES OF WORK WHICH WILL BE REQUIRED.

Plotted Date: 6/11/2019

DESIGNER/DRAFTER: JY/RL
CHECKED BY: TC
NOT TO SCALE

STATE OF CONNECTICUT
DEPARTMENT OF TRANSPORTATION

Filename: ...\FCI-641_CNS_Sheet_0300-0202.dgn

SIGNATURE/BLOCK:
STV Incorporated
185 Plains Road
Suite 208E
Milford, CT 06461

PROJECT TITLE:
NETWORK INFRASTRUCTURE UPGRADE FOR SECURITY NEW HAVEN LINE PHASE 3

TOWN: **STAMFORD TO WESTPORT**

DRAWING TITLE: **CCTV CABINET AND FOUNDATION**

PROJECT NO. 0300-0202
DRAWING NO. FCI-641
SHEET NO. 04.12

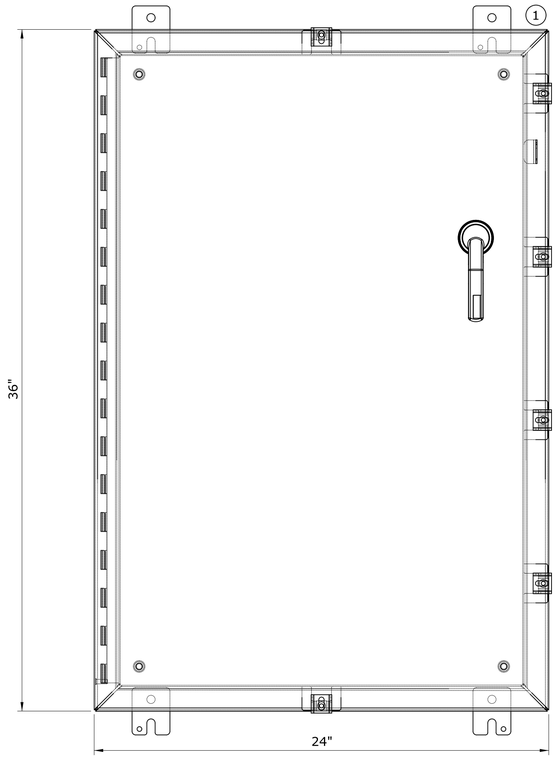

CABINET FRONT VIEW

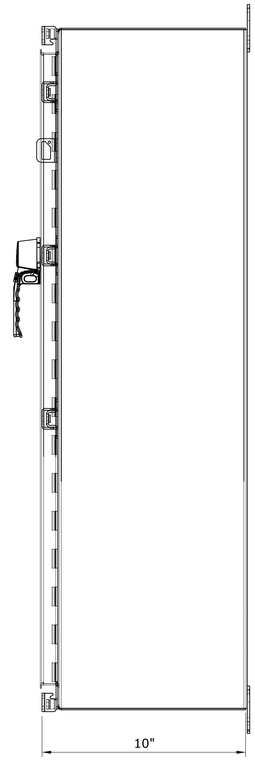

CABINET SIDE VIEW

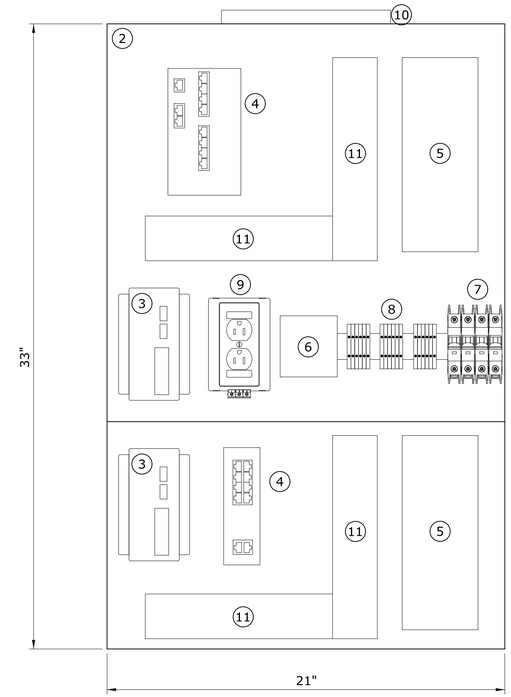

CABINET INTERIOR
(ENCLOSURE REMOVED)

PARTS LIST
SEE NOTE 2

ITEM NO.	QTY.	DESCRIPTION
1	1	NEMA TYPE 4X CABINET
2	1	EQUIPMENT BACKPLATE
3	1-2	170W CISCO POWER SUPPLY
4	1-2	CISCO IE3200 POE NETWORK SWITCH
5	1-4	POE SURGE SUPPRESSION - WALL MOUNT (SEE NOTE 7)
6	1	POWER SURGE SUPPRESSION
7	AS REQUIRED	CIRCUIT BREAKERS
8	AS NEEDED	TERMINAL BLOCKS
9	1	GFCI DUPLEX CONVENIENCE OUTLET WITH COVER
10	1	LED STRIP LIGHT
11	AS NEEDED	CABLE MANAGEMENT PANELS
12	1	TAMPER SWITCH (NOT SHOWN)
13	1	DOOR SWITCH FOR LIGHT (NOT SHOWN, SEE NOTE 5)

1 / FCI-642 **REMOTE SWITCH CABINET**
NOT TO SCALE

NOTES:

1. GROUND ALL NEW RACKS AND CABINETS.
2. DRAWING DEPICTS TYPICAL PARTS REQUIRED FOR CCTV FIELD CABINET ENCLOSURES. REFER TO SPECIAL PROVISIONS FOR ADDITIONAL REQUIREMENTS. CONTRACTOR SHALL PROVIDE CABINET LAYOUTS, CONFIGURATIONS, AND WIRING DIAGRAMS REQUIRED FOR COMPLETE DESIGN FOR APPROVAL BY THE ENGINEER.
3. EQUIPMENT WITHIN THE ENCLOSURE SHALL BE CLEARLY LABELED. PROVIDE DRAWING POCKET WITH COMPLETE, APPROVED WIRING DIAGRAMS WITHIN ENCLOSURE.
4. COORDINATE DOOR SWING WITH SURROUNDING AREA.
5. PROVIDE DOOR SWITCH TO CONTROL LIGHT.
6. SEE DWG. FCI-643 FOR TYPICAL CABINET MOUNTING DETAILS.
7. STACK WALL MOUNT POE SURGE PROTECTION CHASSIS ON TOP OF EACH OTHER WHEN NEEDED. PROVIDE ALL REQUIRED MOUNTING BRACKETS AND HARDWARE.
8. CABINET SHALL INCLUDE A COMPLETE CABLE MANAGEMENT SYSTEM TO CONTROL CABLE BEND RADIUS, PROTECT CABLING, PROVIDE AND MANAGE CABLE SLACK, PROVIDE CABLE STRAIN RELIEF, AND PROVIDE A NEAT AND WORKMANLIKE APPEARANCE.
9. FOR CABINETS WITH ONLY ONE SWITCH, LAYOUT SHOWN SHALL BE MAINTAINED SAME AS THOSE WITH TWO SWITCHES FOR FUTURE USE.

REV.	DATE	REVISION DESCRIPTION	SHEET NO.

THE INFORMATION, INCLUDING ESTIMATED QUANTITIES OF WORK, SHOWN ON THESE SHEETS IS BASED ON LIMITED INVESTIGATIONS BY THE STATE AND IS IN NO WAY WARRANTED TO INDICATE THE CONDITIONS OF ACTUAL QUANTITIES OF WORK WHICH WILL BE REQUIRED.

Plotted Date: 6/11/2019

DESIGNER/DRAFTER: JY/RL
CHECKED BY: TC
NOT TO SCALE

STATE OF CONNECTICUT
DEPARTMENT OF TRANSPORTATION

Filename: ...\FCI-642_CNS_Sheet_0300-0202.dgn

SIGNATURE/BLOCK:
STV Incorporated
185 Plains Road
Suite 208E
Milford, CT 06461

PROJECT TITLE:
NETWORK INFRASTRUCTURE UPGRADE FOR SECURITY NEW HAVEN LINE PHASE 3

TOWN: **STAMFORD TO WESTPORT**

DRAWING TITLE: **REMOTE SWITCH CABINET DETAILS**

PROJECT NO. 0300-0202
DRAWING NO. FCI-642
SHEET NO. 04.13

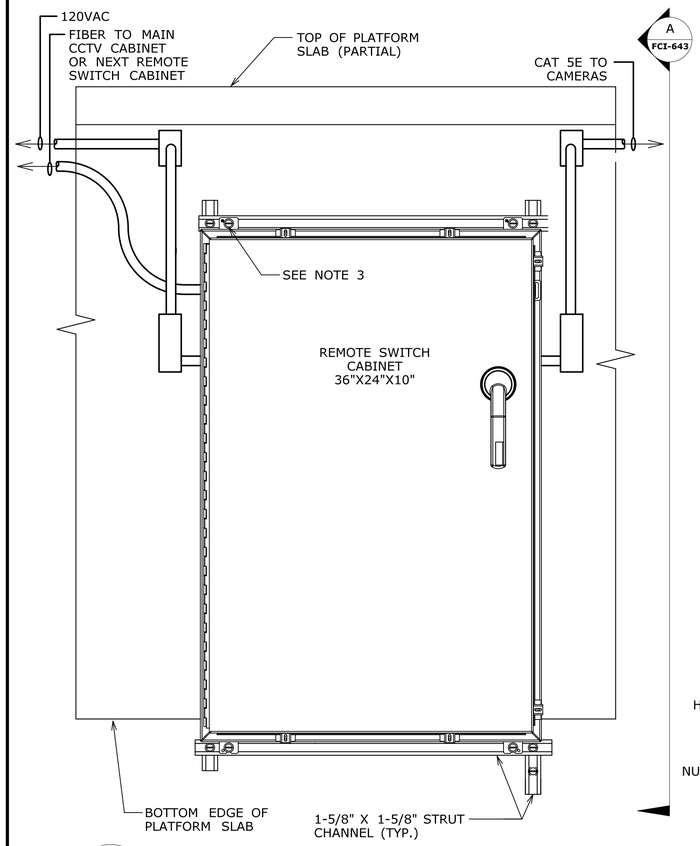

1 FCI-643 **UNDER PLATFORM REMOTE SWITCH CABINET**
NOT TO SCALE

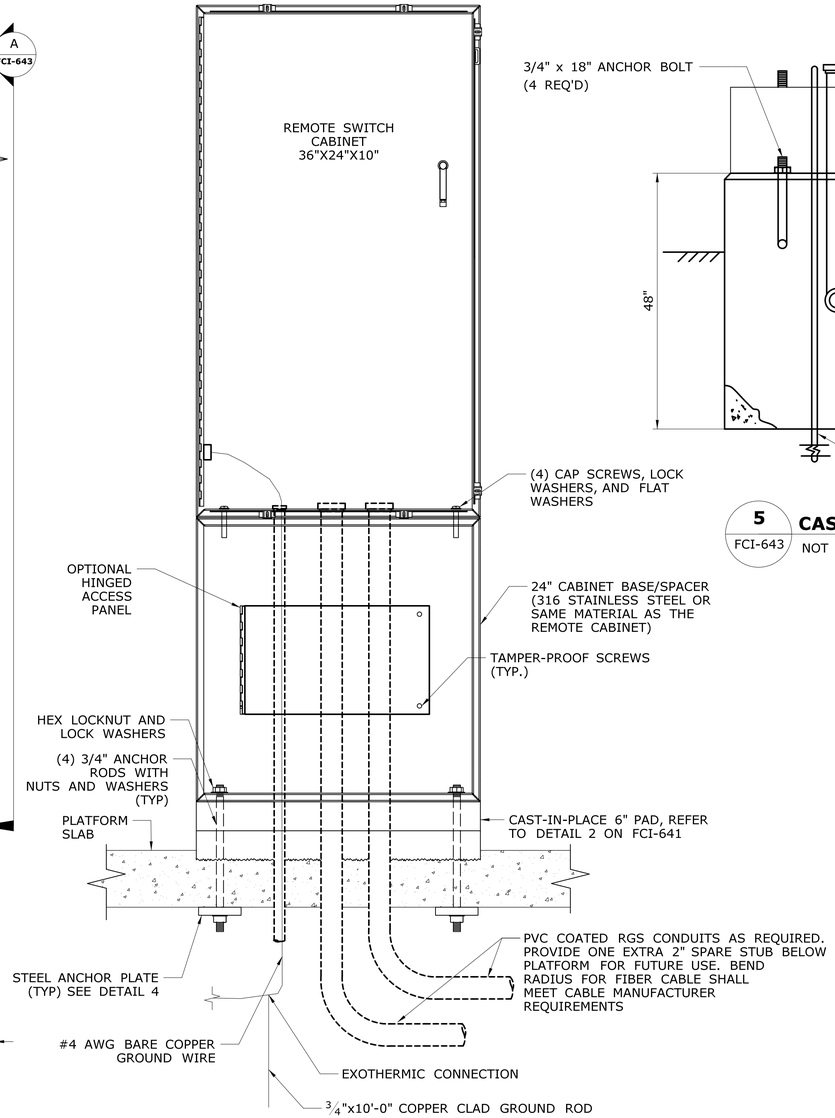

2 FCI-643 **PLATFORM MOUNTED REMOTE SWITCH CABINET**
NOT TO SCALE

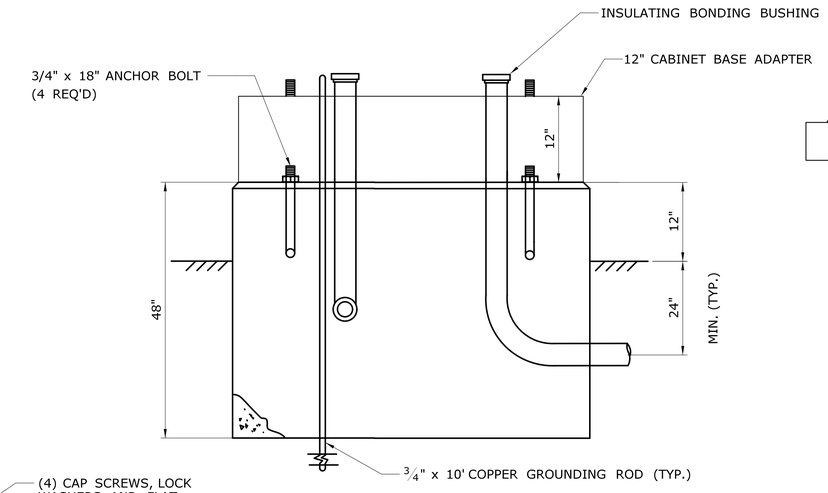

5 FCI-643 **CAST-IN-PLACE FOUNDATION**
NOT TO SCALE

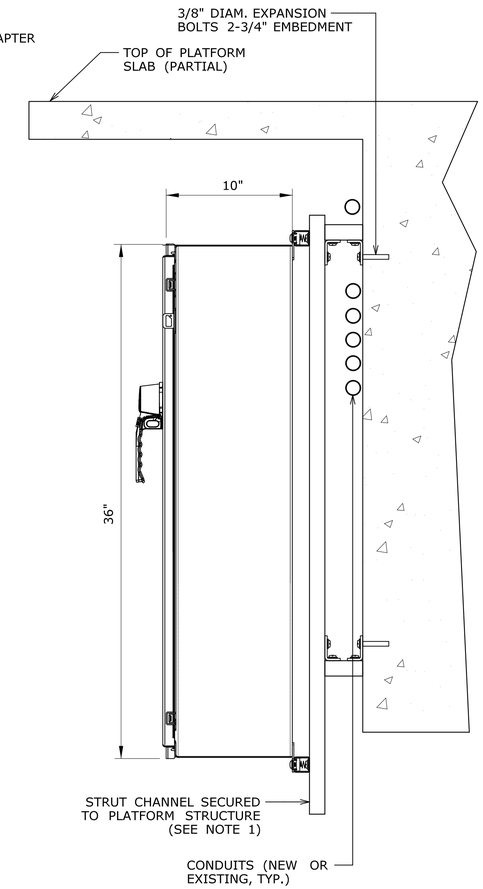

A FCI-643 **UNDER PLATFORM REMOTE SWITCH CABINET**
NOT TO SCALE SIDE VIEW

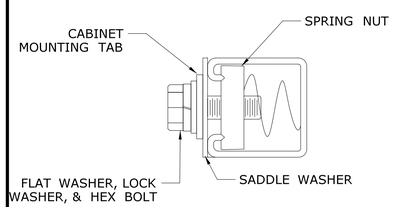

3 FCI-643 **TYPICAL FIELD ENCLOSURE STRUT CHANNEL MOUNT**
NOT TO SCALE

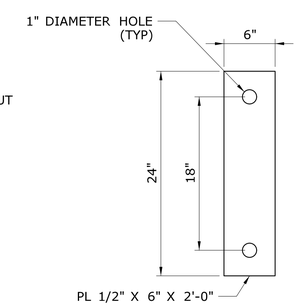

4 FCI-643 **ANCHOR PLATE**
NOT TO SCALE

NOTES:

1. THE CONTRACTOR SHALL FIELD-VERIFY THE FINAL LOCATION OF THE OF THE STATION CCTV CABINETS TO AVOID OBSTRUCTIONS PRIOR TO FABRICATING ANY STRUT CHANNEL COMPONENTS OR RUNNING CONDUIT. CONDUIT SHOWN IS FOR REFERENCE ONLY AND ACTUAL CONFIGURATION WILL VARY BASED ON FIELD CONDITIONS.
2. ALL HARDWARE SHALL BE 316 STAINLESS STEEL.
3. THE CONTRACTOR SHALL VERIFY THE LOCATION OF ANY CABINET MOUNTING FEET PRIOR TO ANY UNISTRUT FABRICATION.
4. THE CONTRACTOR SHALL VERIFY IN THE FIELD THE LOCATIONS OF ALL EXISTING CONDUITS/REBAR ON OR INSIDE THE CONCRETE PLATFORM PRIOR TO ANY CONSTRUCTION SO THAT FIELD DRILLING WILL NOT DAMAGE ANY EXISTING CONDUITS OR WIRING.
5. COORDINATE CONDUIT ENTRY LOCATIONS IN CABINET TO MAINTAIN CABLE SEPERATION AS REQUIRED BY NEC.

REV.	DATE	REVISION DESCRIPTION	SHEET NO.

THE INFORMATION, INCLUDING ESTIMATED QUANTITIES OF WORK, SHOWN ON THESE SHEETS IS BASED ON LIMITED INVESTIGATIONS BY THE STATE AND IS IN NO WAY WARRANTED TO INDICATE THE CONDITIONS OF ACTUAL QUANTITIES OF WORK WHICH WILL BE REQUIRED.

Plotted Date: 6/11/2019

DESIGNER/DRAFTER: JY/RL
CHECKED BY: TC
NOT TO SCALE

STATE OF CONNECTICUT
DEPARTMENT OF TRANSPORTATION

Filename: ...\FCI-643_CNS_Sheet_0300-0202.dgn

SIGNATURE/BLOCK:
STV Incorporated
185 Plains Road
Suite 208E
Milford, CT 06461

PROJECT TITLE:
NETWORK INFRASTRUCTURE UPGRADE FOR SECURITY NEW HAVEN LINE PHASE 3

TOWN: STAMFORD TO WESTPORT

DRAWING TITLE: REMOTE SWITCH CABINET MOUNTING DETAILS

PROJECT NO. 0300-0202
DRAWING NO. FCI-643
SHEET NO. 04.14

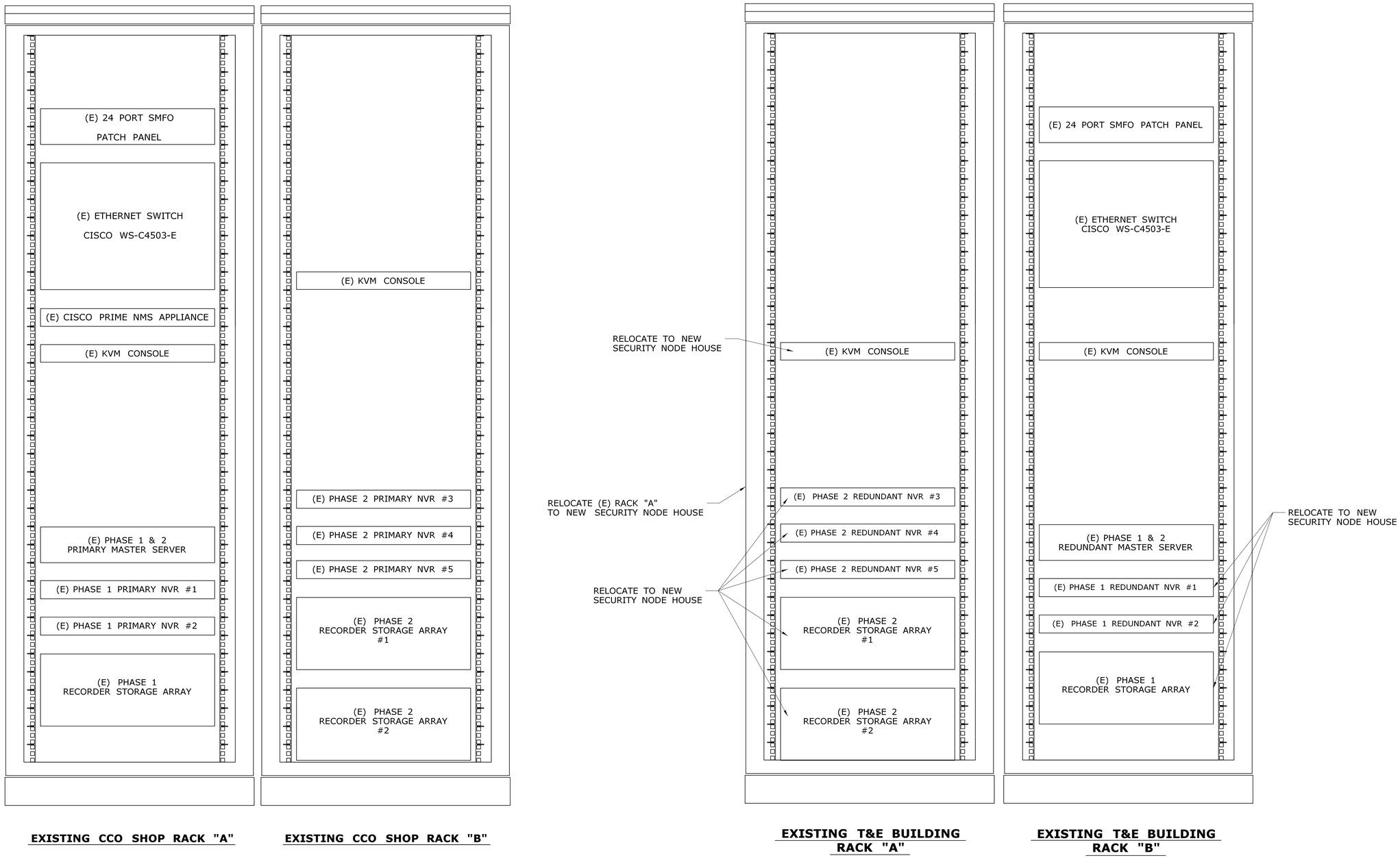

EXISTING CCO SHOP RACK "A"

EXISTING CCO SHOP RACK "B"

EXISTING T&E BUILDING RACK "A"

EXISTING T&E BUILDING RACK "B"

EXISTING PRIMARY HEAD-END CCO SHOP RM 160

EXISTING BACKUP HEAD-END T&E BUILDING

REV.	DATE	REVISION DESCRIPTION	SHEET NO.

THE INFORMATION, INCLUDING ESTIMATED QUANTITIES OF WORK, SHOWN ON THESE SHEETS IS BASED ON LIMITED INVESTIGATIONS BY THE STATE AND IS IN NO WAY WARRANTED TO INDICATE THE CONDITIONS OF ACTUAL QUANTITIES OF WORK WHICH WILL BE REQUIRED.

Plotted Date: 7/2/2019

DESIGNER/DRAFTER: JY/MC

CHECKED BY: TC

NOT TO SCALE

STATE OF CONNECTICUT
DEPARTMENT OF TRANSPORTATION

Filename: ...\FCI-650_CNS_Sheet_0300-0202.dgn

SIGNATURE/ BLOCK:

STV Incorporated
185 Plains Road
Suite 208E
Milford, CT 06461

PROJECT TITLE:

NETWORK INFRASTRUCTURE UPGRADE FOR SECURITY NEW HAVEN LINE PHASE 3

TOWN: **STAMFORD TO WESTPORT**

DRAWING TITLE: **EXISTING CCTV SYSTEM HEAD-END**

PROJECT NO. **0300-0202**

DRAWING NO. **FCI-650**

SHEET NO. **04.15**

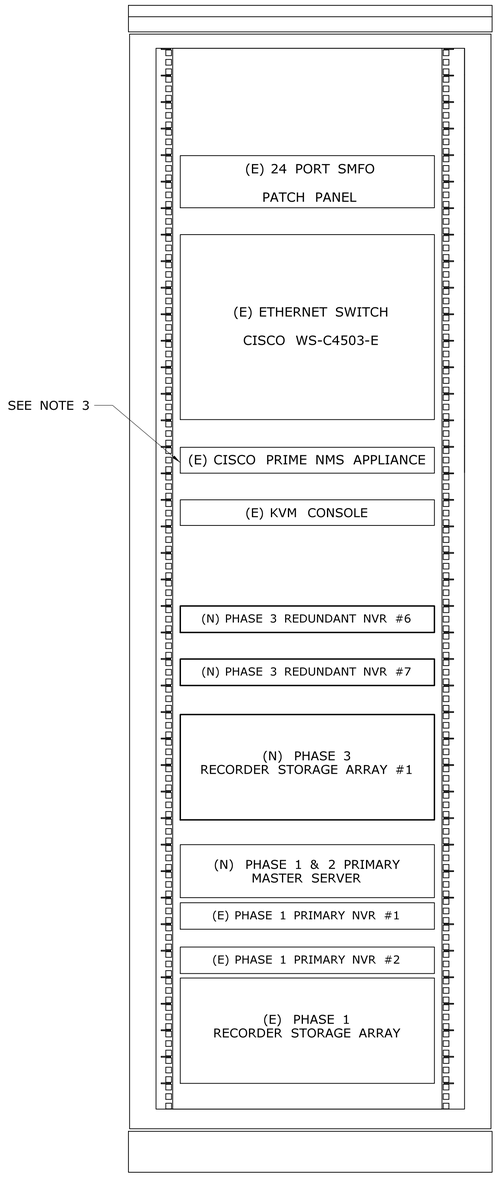

MODIFIED CCO SHOP RACK "A"

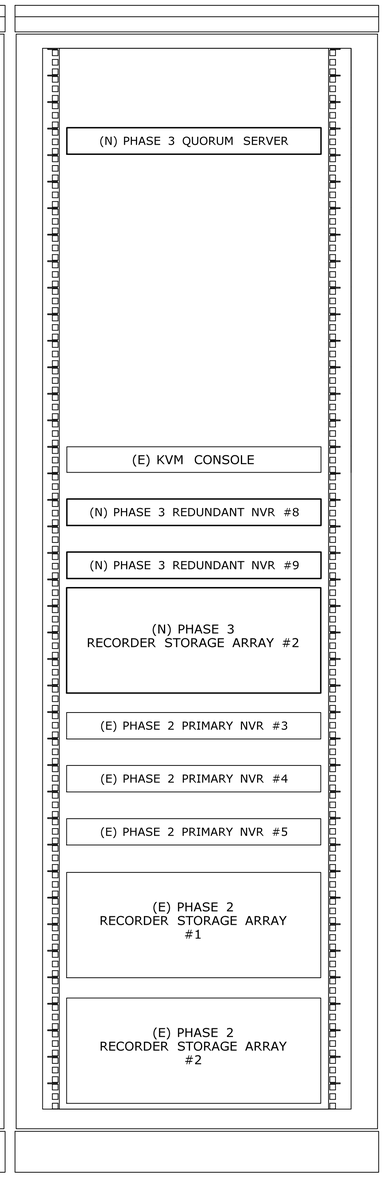

MODIFIED CCO SHOP RACK "B"

MODIFIED HEAD-END CCO SHOP RM 160

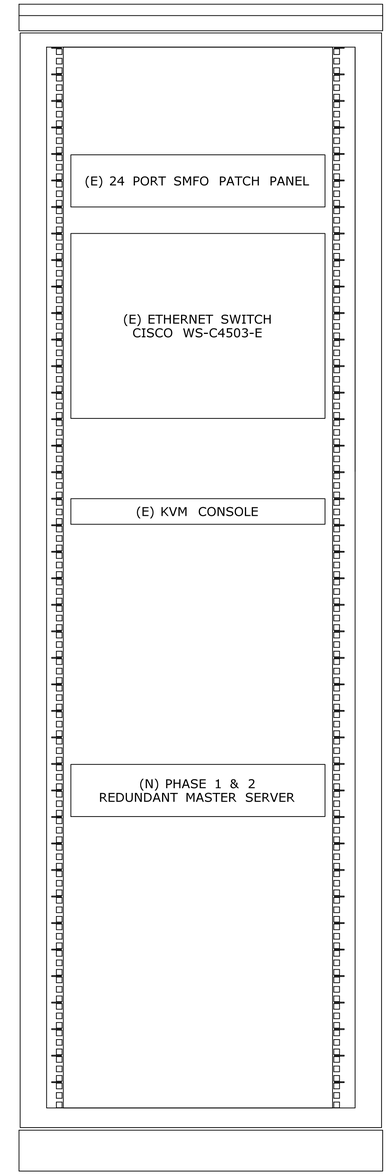

MODIFIED T&E BUILDING RACK "B"

MODIFIED HEAD-END T&E BUILDING

NOTES:

1. EXISTING PHASE 1 & 2 MASTER SERVERS HARDWARE SHALL BE REPLACED WITH NEW HARDWARS. LATEST VERSION OF VMS AND ANY NECESSARY SOFTWARE SHALL BE INSTALLED.
2. THE PHASE 1 & 2 RECORDERS SHALL ALSO BE UPGRADED TO THE LATEST VERSION OF THE VMS SOFTWARE.
3. NETWORK MANAGEMENT SYSTEM SHALL BE UPGRADED TO SUPPORT NEW NETWORK EQUIPMENT AND ANY NEW FIRMWARE UPDATES TO EXISTING EQUIPMENT. REFER TO SPECIFICATION FOR ADDITION REQUREMENTS.

REV.	DATE	REVISION DESCRIPTION	SHEET NO.

THE INFORMATION, INCLUDING ESTIMATED QUANTITIES OF WORK, SHOWN ON THESE SHEETS IS BASED ON LIMITED INVESTIGATIONS BY THE STATE AND IS IN NO WAY WARRANTED TO INDICATE THE CONDITIONS OF ACTUAL QUANTITIES OF WORK WHICH WILL BE REQUIRED.

Plotted Date: 7/1/2019

DESIGNER/DRAFTER: JY/MC

CHECKED BY: TC

NOT TO SCALE

STATE OF CONNECTICUT
DEPARTMENT OF TRANSPORTATION

Filename: ...\FCI-651_CNS_SHEET_0300-0202.dgn

SIGNATURE/ BLOCK:

STV Incorporated
185 Plains Road
Suite 208E
Milford, CT 06461

PROJECT TITLE:

NETWORK INFRASTRUCTURE UPGRADE FOR SECURITY NEW HAVEN LINE PHASE 3

TOWN: **STAMFORD TO WESTPORT**

DRAWING TITLE: **MODIFIED CCTV SYSTEM HEAD-END SHEET 1 OF 2**

PROJECT NO. **0300-0202**

DRAWING NO. **FCI-651**

SHEET NO. **04.16**

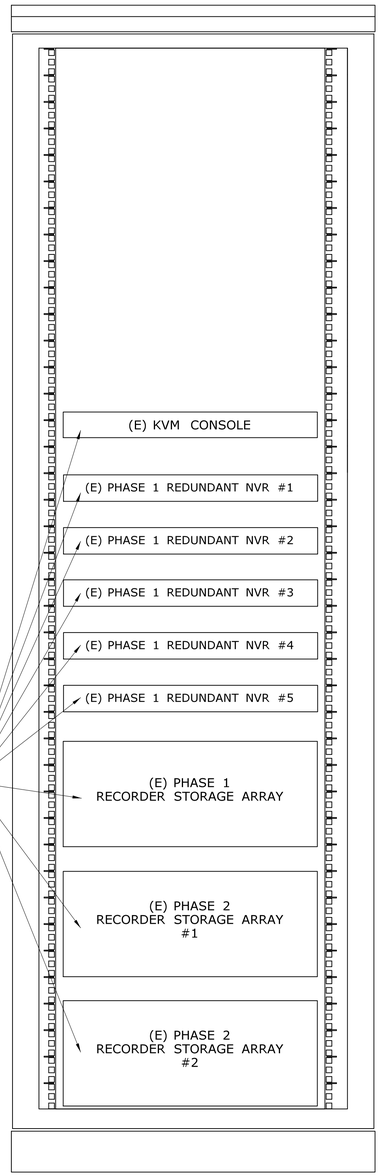

NEW RACK FOR
PHASE 1 & 2 EQUIPMENT

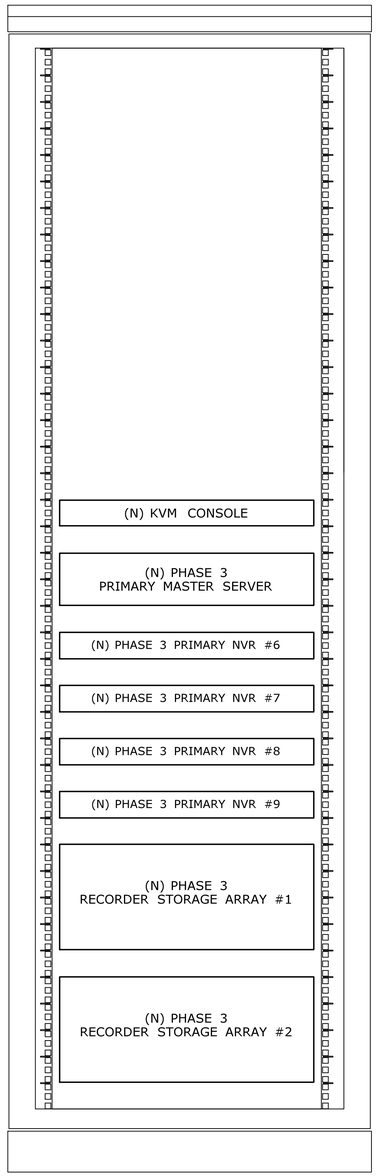

NEW RACK FOR
PHASE 3 EQUIPMENT

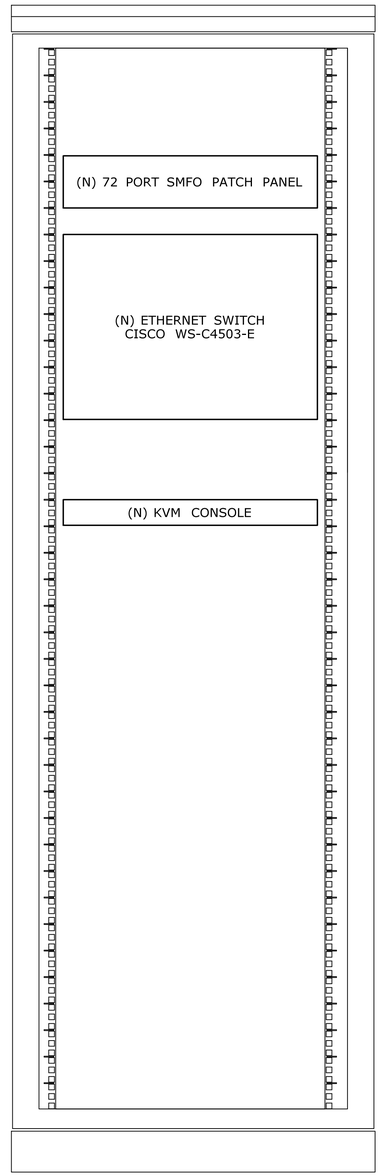

NEW NETWORK RACK

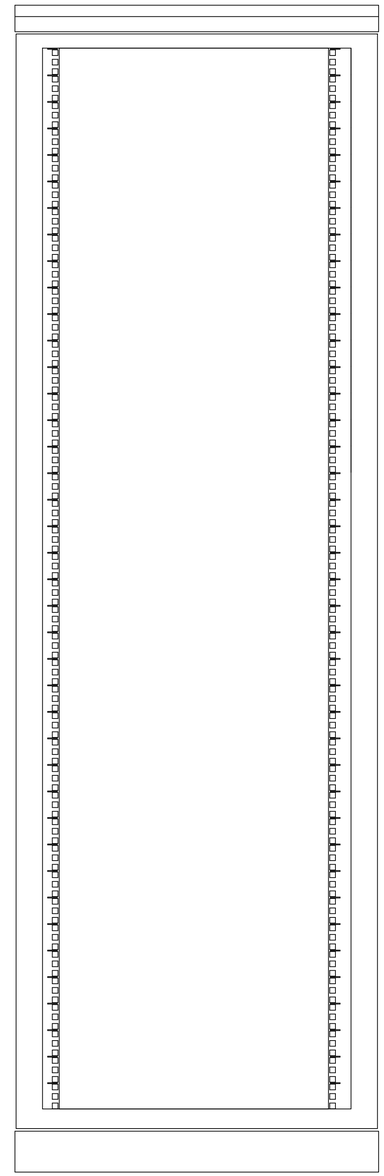

(E) RACK (SPARE)
RELOCATED FROM T&E BUILDING

NEW SECURITY NODE HOUSE

RELOCATED FROM
EXISTING CABINET AT WESTPORT.
COORDINATE RELOCATION AND
REMOVAL OF OLD CABINET WITH
WESTPORT POLICE DEPARTMENT

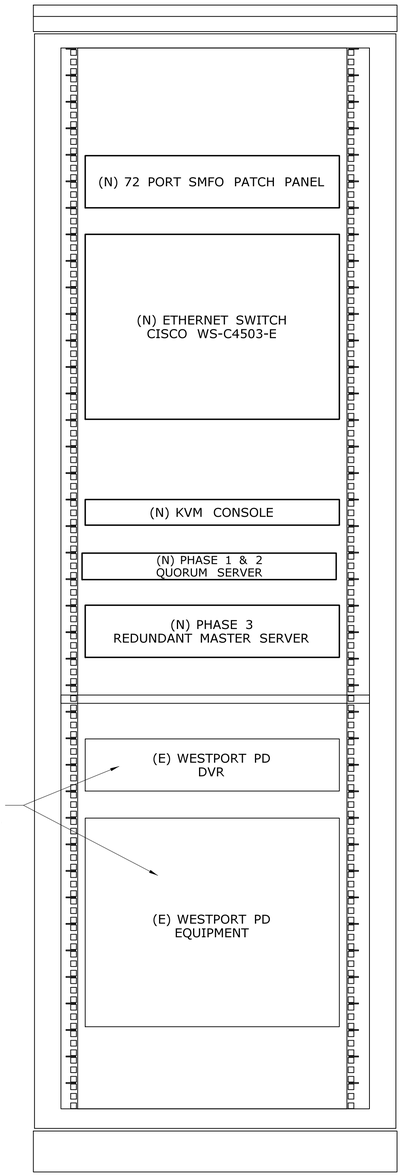

NEW RACK CABINET FOR
PHASE 1, 2 & 3 EQUIPMENT
AND EXISTING WESTPORT PD EQUIPMENT
(SEE DWG FCI-525 FOR LOCATION)

WESTPORT STORAGE ROOM

NOTES:

1. PROVIDE TWO VERTICAL POWER STRIPS IN EACH RACK.
2. THE PHASE 1 & 2 RECORDER SHALL ALSO BE UPGRADED TO THE LATEST VERSION OF THE VMS SOFTWARE.

REV.	DATE	REVISION DESCRIPTION	SHEET NO.

THE INFORMATION, INCLUDING ESTIMATED QUANTITIES OF WORK, SHOWN ON THESE SHEETS IS BASED ON LIMITED INVESTIGATIONS BY THE STATE AND IS IN NO WAY WARRANTED TO INDICATE THE CONDITIONS OF ACTUAL QUANTITIES OF WORK WHICH WILL BE REQUIRED.

Plotted Date: 7/2/2019

DESIGNER/DRAFTER: JY/MC
CHECKED BY: TC
NOT TO SCALE

STATE OF CONNECTICUT
DEPARTMENT OF TRANSPORTATION

Filename: ...\FCI-652_CNS_SHEET_0300-0202.dgn

SIGNATURE/BLOCK:
STV Incorporated
185 Plains Road
Suite 208E
Milford, CT 06461

PROJECT TITLE:
NETWORK INFRASTRUCTURE UPGRADE FOR SECURITY NEW HAVEN LINE PHASE 3

TOWN: **STAMFORD TO WESTPORT**

DRAWING TITLE: **MODIFIED CCTV SYSTEM HEAD-END SHEET 2 OF 2**

PROJECT NO. 0300-0202
DRAWING NO. FCI-652
SHEET NO. 04.17

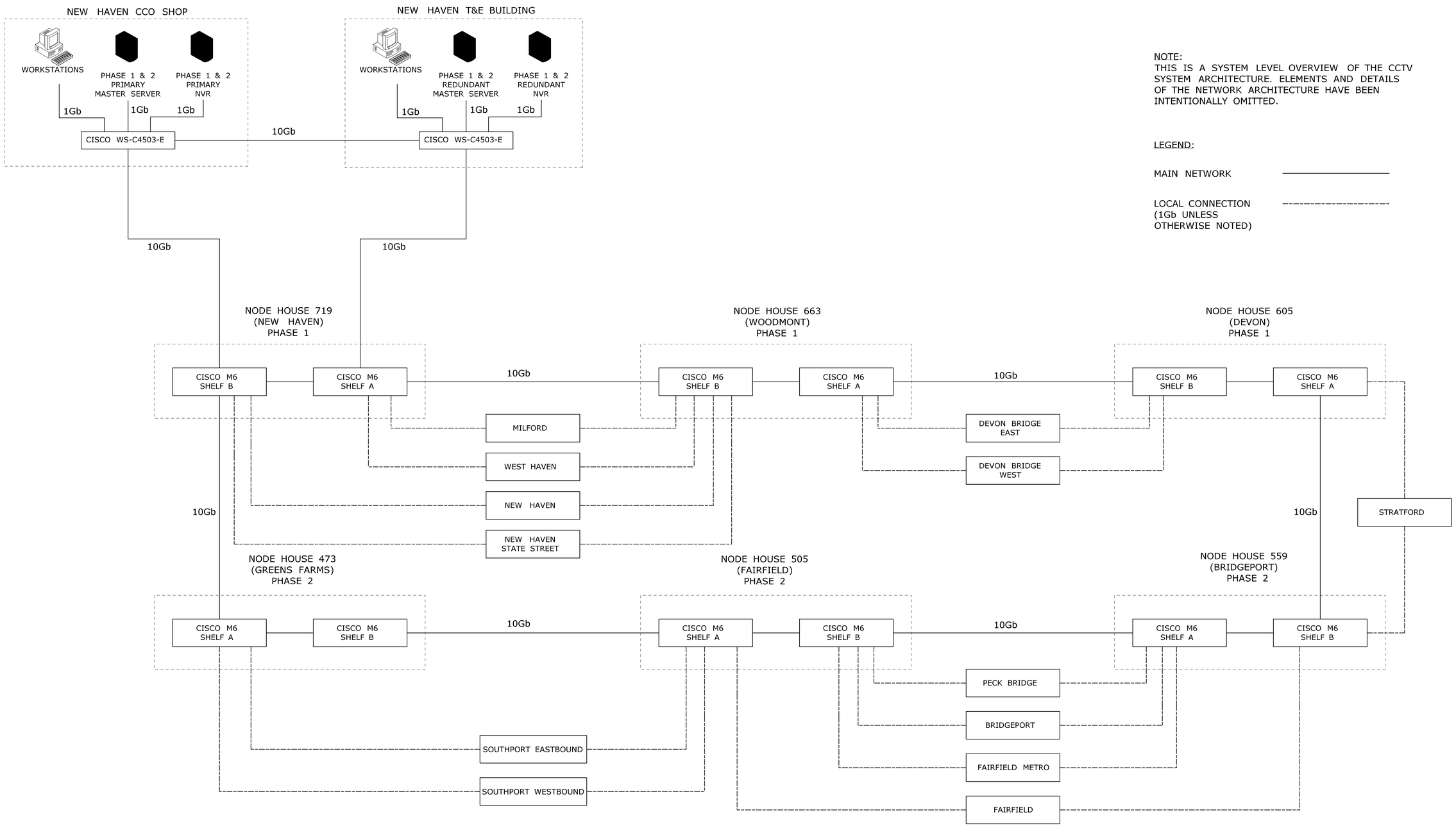

REV.	DATE	REVISION DESCRIPTION	SHEET NO.

THE INFORMATION, INCLUDING ESTIMATED QUANTITIES OF WORK, SHOWN ON THESE SHEETS IS BASED ON LIMITED INVESTIGATIONS BY THE STATE AND IS IN NO WAY WARRANTED TO INDICATE THE CONDITIONS OF ACTUAL QUANTITIES OF WORK WHICH WILL BE REQUIRED.

Plotted Date: 6/11/2019

DESIGNER/DRAFTER: JY/MN

CHECKED BY: TC

NOT TO SCALE

STATE OF CONNECTICUT
DEPARTMENT OF TRANSPORTATION

Filename: ...\FCI-653_CNS_SHEET_0300-0202.dgn

SIGNATURE/BLOCK:

STV Incorporated
185 Plains Road
Suite 208E
Milford, CT 06461

PROJECT TITLE:

NETWORK INFRASTRUCTURE UPGRADE FOR SECURITY NEW HAVEN LINE PHASE 3

TOWN: **STAMFORD TO WESTPORT**

DRAWING TITLE: **EXISTING NETWORK ARCHITECTURE DIAGRAM**

PROJECT NO. **0300-0202**

DRAWING NO. **FCI-653**

SHEET NO. **04.18**

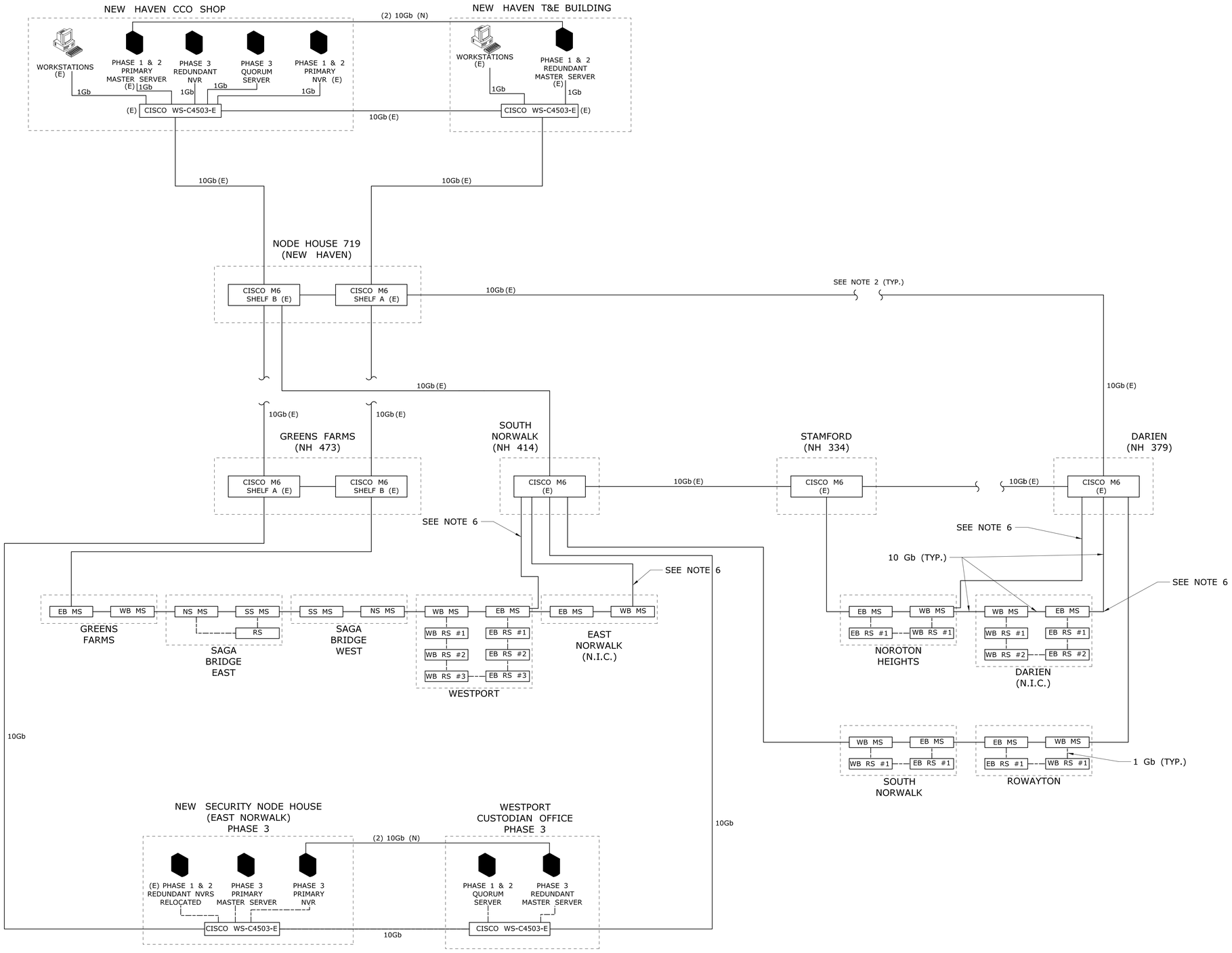

NOTES:

1. THIS IS A SYSTEM LEVEL OVERVIEW OF THE CCTV SYSTEM ARCHITECTURE. ELEMENTS AND DETAILS OF THE NETWORK ARCHITECTURE HAVE BEEN INTENTIONALLY OMITTED.
2. ALL CONNECTIONS BETWEEN NODE HOUSE CISCO M6 ARE EXISTING. INTERMEDIATE CONNECTIONS BETWEEN NODE HOUSES ARE NOT SHOWN FOR CLARITY.
3. REFER TO DWG. FCI- 653 FOR EXISTING NETWORK ARCHITECTURE.
4. CONNECTIONS TO REMOTE SWITCHES (IE3200) TO BE 1Gb. ALL OTHER CONNECTIONS TO BE 10Gb UNLESS OTHERWISE NOTED.
5. ALL EQUIPMENT AND CONNECTIONS ARE NEW UNLESS OTHERWISE NOTED.
6. WESTPORT AND NORTON HEIGHTS SHALL BE TEMPORARY CONNECTED TO THE NODE HOUSES BEFORE EAST NORWALK AND DARIEN STATIONS ARE COMPLETE.

LEGEND:

10 Gb ————————

1 Gb - - - - - - - - - - - - - - -

ABBREVIATIONS:

MS	STATION MAIN SWITCH (CISCO IE 5000)
RS	STATION REMOTE SWITCH (CISCO IE 3200)
EB	EASTBOUND
WB	WESTBOUND
NH	NODE HOUSE
(E)	EXISTING
SS	SOUTH SIDE
NS	NORTH SIDE

REV.	DATE	REVISION DESCRIPTION	SHEET NO.

THE INFORMATION, INCLUDING ESTIMATED QUANTITIES OF WORK, SHOWN ON THESE SHEETS IS BASED ON LIMITED INVESTIGATIONS BY THE STATE AND IS IN NO WAY WARRANTED TO INDICATE THE CONDITIONS OF ACTUAL QUANTITIES OF WORK WHICH WILL BE REQUIRED.

Plotted Date: 6/11/2019

DESIGNER/DRAFTER: JY/MN

CHECKED BY: TC

NOT TO SCALE

STATE OF CONNECTICUT
DEPARTMENT OF TRANSPORTATION

Filename: ...\FCI-654_CNS_SHEET_0300-0202.dgn

SIGNATURE/BLOCK:

STV Incorporated
185 Plains Road
Suite 208E
Milford, CT 06461

PROJECT TITLE:

NETWORK INFRASTRUCTURE UPGRADE FOR SECURITY NEW HAVEN LINE PHASE 3

TOWN: **STAMFORD TO WESTPORT**

DRAWING TITLE: **NEW NETWORK ARCHITECTURE DIAGRAM**

PROJECT NO. 0300-0202

DRAWING NO. FCI-654

SHEET NO. 04.19

HARTFORD LINE

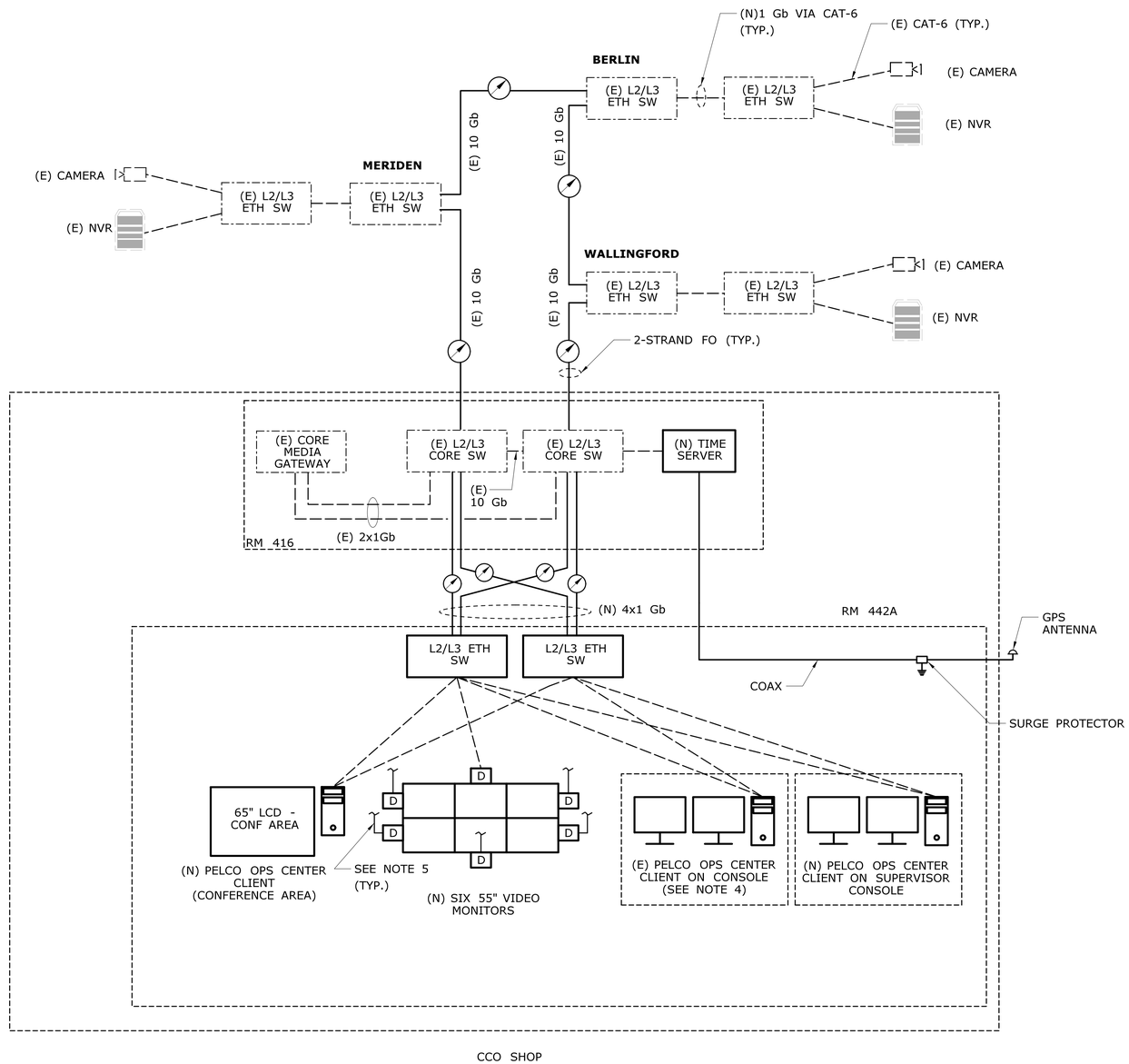

LEGEND

(E) L2/L3 ETH SW	EXISTING
L2/L3 ETH SW	PROPOSED NEW NETWORK SWITCH
— — — —	COPPER CAT-6
—⊘—	FIBER
(E)	EXISTING
(N)	NEW
D	PELCO VIDEO DECODER

NOTES:

1. NEW L2/L3 CORE SWITCHES IN ROOM 442A SHALL BE STACKED AS ONE VIRTUAL SWITCH.
2. HARTFORD LINE WORKSTATIONS AND CONSOLES SHALL BE ON SEPARATE SWITCHES FROM NEW HAVEN LINE WORKSTATIONS AND CONSOLES.
3. PROVIDE TWO NETWORK CONNECTIONS FROM EACH WORKSTATION/CONSOLE TO THE RM 442A SWITCHES.
4. RELOCATE EXISTING PELCO OPS CENTER WORKSTATION FROM SECURITY OFFICE 442B TO RM 442A.
5. EACH VIDEO DECODER SHALL BE CONNECTED TO ONE OF THE ETHERNET SWITCHES VIA CAT-6 IN THE CONTROL ROOM.
6. PROVIDE NEW GPS SYNCHRONIZED TIME SERVER IN ROOM 416. CONFIGURE THE EXISTING HARTFORD LINE NETWORK TO SYNCHRONIZE WITH GPS TIME.
7. MOUNT GPS ANTENNA ON ROOF PARAPET. PROVIDE SURGE PROTECTOR FOR ANTENNA AND GROUND THE SURGE PROTECTOR TO NEAREST STRUCTURAL STEEL. SEE FCI-592 FOR DETAIL.

REV.	DATE	REVISION DESCRIPTION	SHEET NO.

THE INFORMATION, INCLUDING ESTIMATED QUANTITIES OF WORK, SHOWN ON THESE SHEETS IS BASED ON LIMITED INVESTIGATIONS BY THE STATE AND IS IN NO WAY WARRANTED TO INDICATE THE CONDITIONS OF ACTUAL QUANTITIES OF WORK WHICH WILL BE REQUIRED.

Plotted Date: 6/11/2019

DESIGNER/DRAFTER: YC/MN

CHECKED BY: EN

NOT TO SCALE

STATE OF CONNECTICUT
DEPARTMENT OF TRANSPORTATION

Filename: ...\FCI-655_CNS_SHEET_0300-0202.dgn

SIGNATURE/BLOCK:

STV Incorporated
185 Plains Road
Suite 208E
Milford, CT 06461

PROJECT TITLE:

NETWORK INFRASTRUCTURE UPGRADE FOR SECURITY NEW HAVEN LINE PHASE 3

TOWN: **STAMFORD TO WESTPORT**

DRAWING TITLE: **HARTFORD LINE NETWORK BLOCK DIAGRAM**

PROJECT NO. **0300-0202**

DRAWING NO. **FCI-655**

SHEET NO. **04.20**

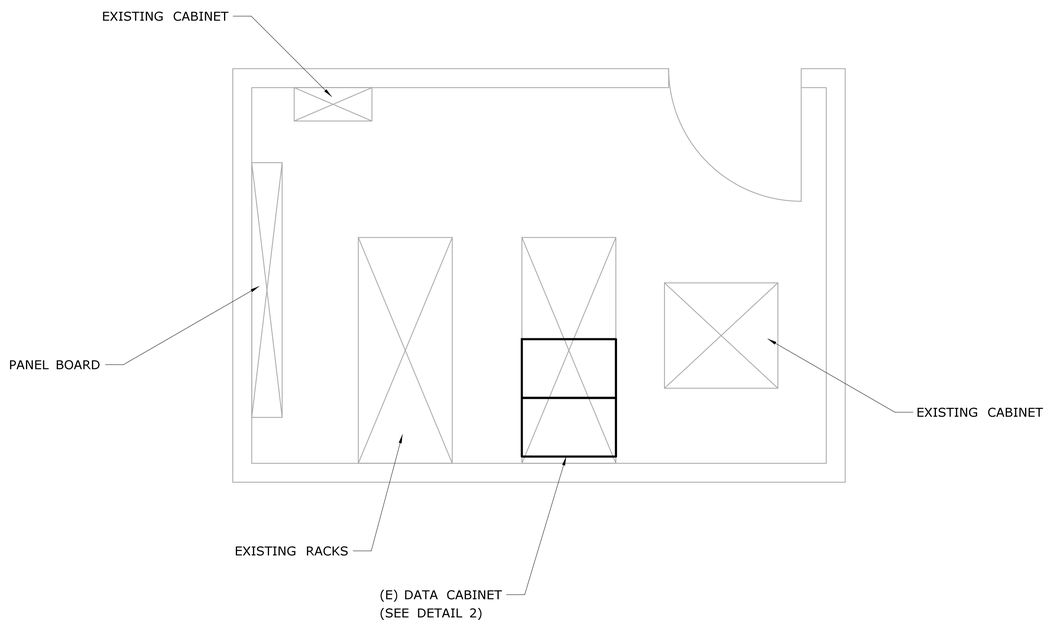

1 / FCI-656 **ROOM 416 (IT/COMM ROOM)**

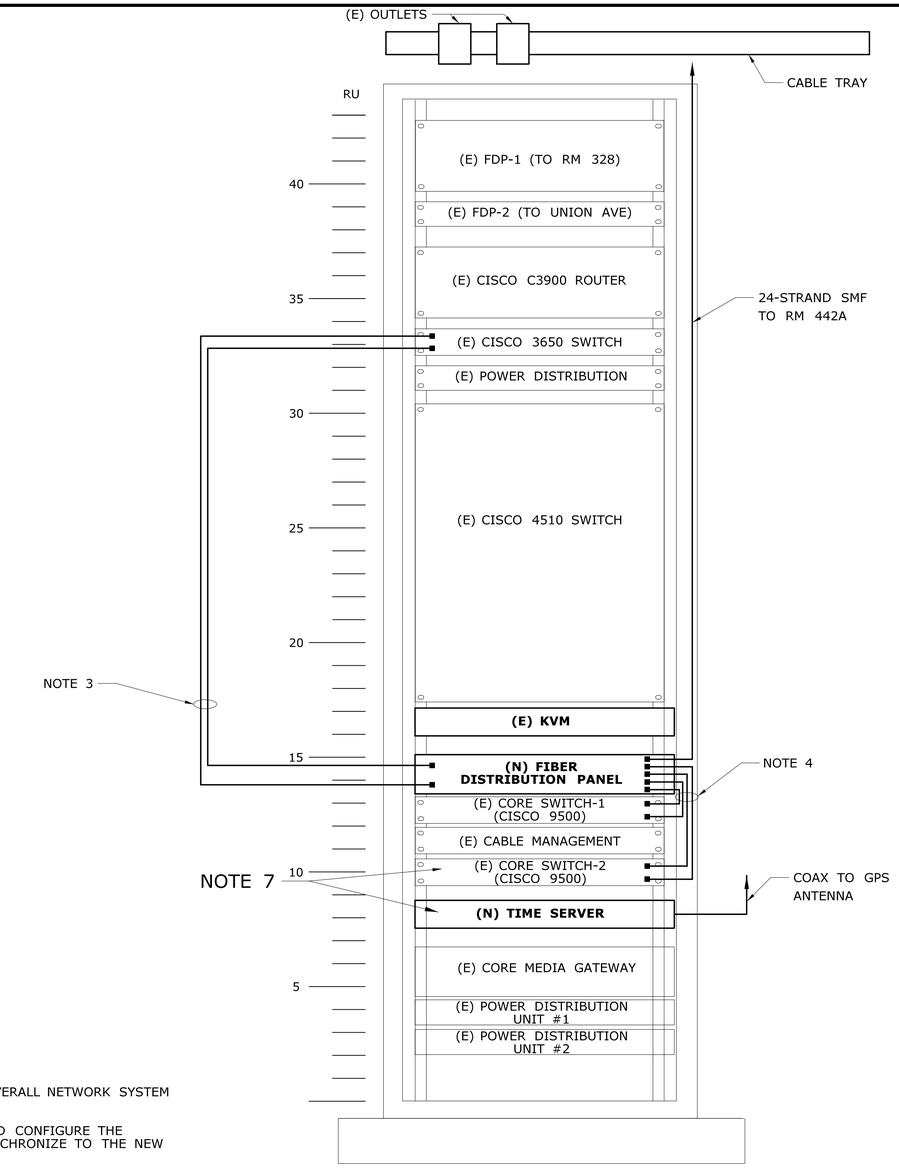

2 / FCI-656 **EXISTING EQUIPMENT CABINET**

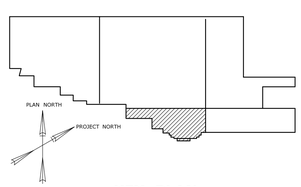

KEY PLAN

NOTES:

1. REFER TO DWG. NO. FCI-655 AND FCI-583 FOR OVERALL NETWORK SYSTEM DIAGRAM.
2. CONTRACTOR TO PROVIDE NEW TIME SERVER AND CONFIGURE THE HARTFORD LINE SWITCHES AND SERVERS TO SYNCHRONIZE TO THE NEW TIME SERVER.
3. PROVIDE TWO 1 Gb CONNECTION FROM THE EXISTING CISCO 3650 TO NEW HAVEN LINE ETHERNET SWITCHES IN RM 442A CONTROL ROOM VIA 12-FIBER CABLE. REFER TO FCI-583 FOR MORE DETAILS.
4. PROVIDE TWO 1 Gb CONNECTION FROM EACH CORE SWITCH TO EACH HARTFORD LINE SWITCH IN RM 442A CONTROL ROOM VIA 12-FIBER CABLE. REFER TO FCI-583 FOR MORE DETAILS.
5. CONTRACTOR TO PROVIDE TWO 1 Gb SFP FOR THE EXISTING CISCO 3650 SWITCH. PROVIDE FOUR 1 Gb SFP FOR EXISTING CISCO 9500 SWITCHES. (TWO FOR EACH SWITCH).
6. CONTRACTOR TO COORDINATE WITH CTDOT IT AND MNR FOR ALL REQUIRED CONNECTIONS TO EXISTING EQUIPMENT.
7. CONTRACTOR TO PROVIDE CAT-6 CONNECTION FROM TIME SERVER TO CORE SWITCH.

REV.	DATE	REVISION DESCRIPTION	SHEET NO.

THE INFORMATION, INCLUDING ESTIMATED QUANTITIES OF WORK, SHOWN ON THESE SHEETS IS BASED ON LIMITED INVESTIGATIONS BY THE STATE AND IS IN NO WAY WARRANTED TO INDICATE THE CONDITIONS OF ACTUAL QUANTITIES OF WORK WHICH WILL BE REQUIRED.

Plotted Date: 6/11/2019

DESIGNER/DRAFTER: YC/MN
CHECKED BY: EN
NOT TO SCALE

STATE OF CONNECTICUT
DEPARTMENT OF TRANSPORTATION

Filename: ...\FCI-656_CNS_SHEET_0300-0202.dgn

SIGNATURE/BLOCK:
STV Incorporated
185 Plains Road
Suite 208E
Milford, CT 06461

PROJECT TITLE:
NETWORK INFRASTRUCTURE UPGRADE FOR SECURITY NEW HAVEN LINE PHASE 3

TOWN: **STAMFORD TO WESTPORT**

DRAWING TITLE: **CCO IT ROOM EQUIPMENT LAYOUT**

PROJECT NO. **0300-0202**
DRAWING NO. **FCI-656**
SHEET NO. **04.21**

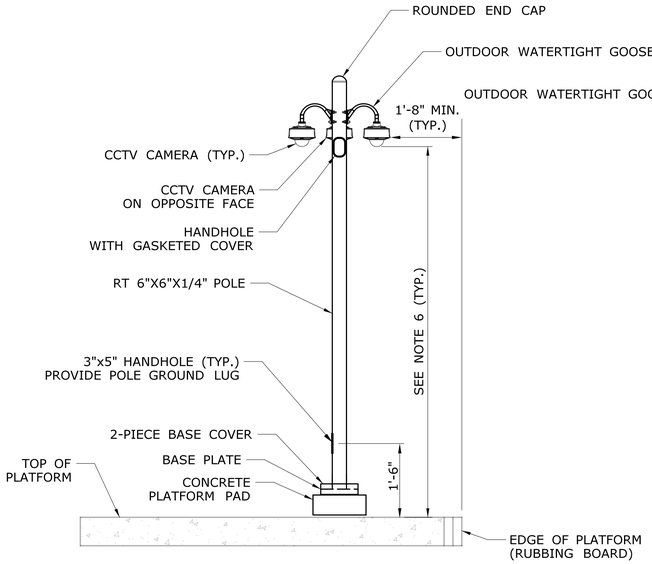

1 FCI-660 **CCTV POLE TYPE B**
NOT TO SCALE

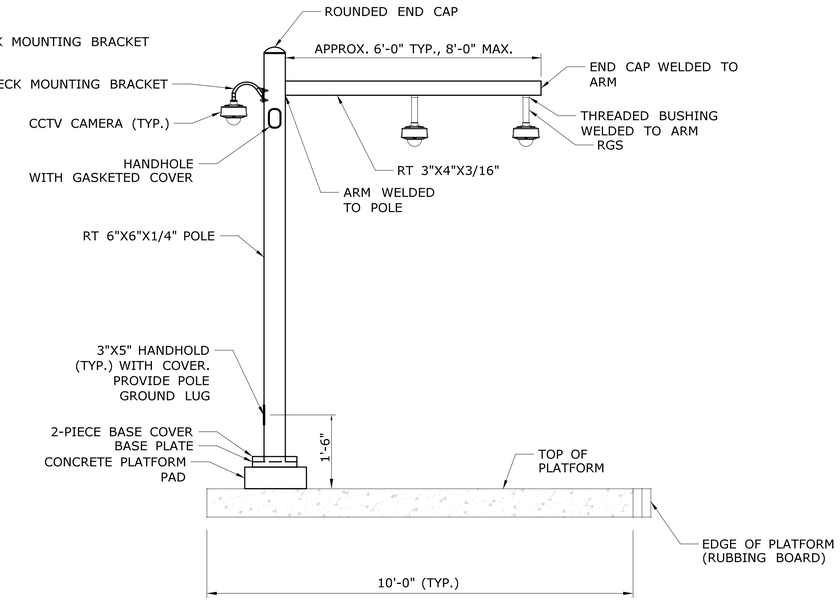

2 FCI-660 **CCTV POLE TYPE C**
NOT TO SCALE

NOTES:

1. COORDINATE POLE DIMENSIONS, CAMERA LOCATIONS, AND MOUNTING HEIGHTS WITH EXISTING CONDITIONS AND EQUIPMENT. THE CONTRACTOR SHALL SUBMIT FOR APPROVAL BY THE ENGINEER COMPLETE SHOP DRAWINGS FOR THE POLES INCLUDING POLE MATERIALS, DIMENSIONS, AND SECTIONS. THE POLES SHALL BE CONSTRUCTED TO ACCOMMODATE THE CAMERAS, EQUIPMENT, AND LOCATIONS AS SHOWN ON THE CONTRACT DRAWINGS AND IN ACCORDANCE WITH THE SPECIFICATIONS.
2. ALL ANCHORS AND HARDWARE SHALL BE STAINLESS STEEL.
3. THE CONTRACTOR SHALL INCLUDE A STEEL PLATE UNDER PLATFORM AS SHOWN, AND SHALL INCLUDE WITH EACH CCTV POLE SUBMITTAL TO BE APPROVED BY THE ENGINEER.
4. POLES SHALL BE PAINTED TO MATCH EXISTING LIGHT POLES AT STATION. POLES AT SAGA BRIDGE SHALL BE PAINTED TO MATCH CATENARY STRUCTURES. SUBMIT COLORS FOR APPROVAL BY ENGINEER.
5. REFER TO CAMERA SCHEDULES FOR APPROXIMATE CAMERA MOUNTING HEIGHTS. ALL MOUNTING HEIGHTS SHALL BE VERIFIED IN THE FIELD BY THE CONTRACTOR PRIOR TO FABRICATION OF POLES.

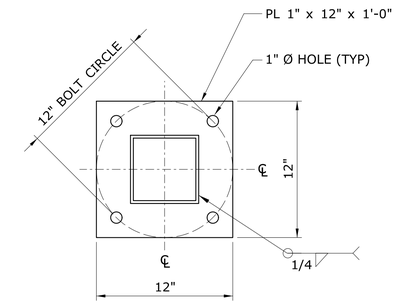

5 FCI-660 **CCTV POLE BASE PLATE**
NOT TO SCALE

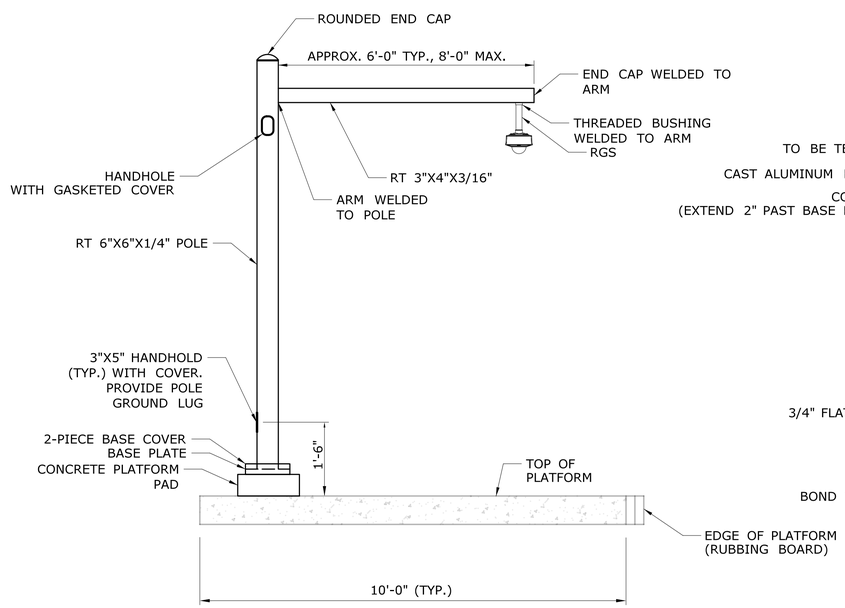

3 FCI-660 **CCTV POLE TYPE D**
NOT TO SCALE

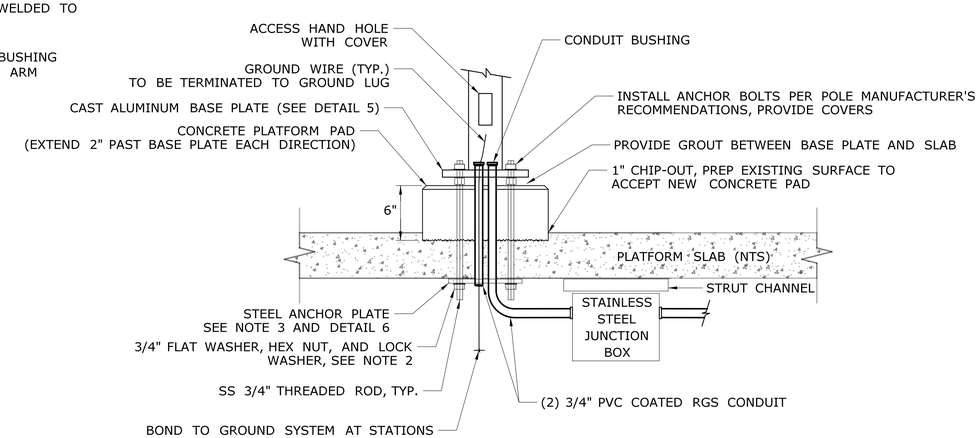

4 FCI-660 **STATION PLATFORM POLE ATTACHMENT**
NOT TO SCALE

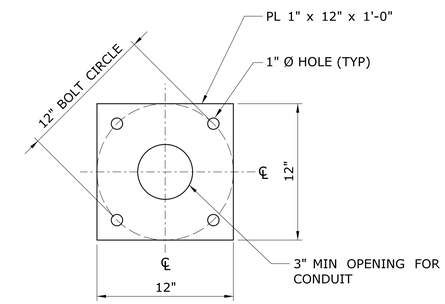

6 FCI-660 **CCTV POLE ANCHOR PLATE**
NOT TO SCALE

REV.	DATE	REVISION DESCRIPTION	SHEET NO.

THE INFORMATION, INCLUDING ESTIMATED QUANTITIES OF WORK, SHOWN ON THESE SHEETS IS BASED ON LIMITED INVESTIGATIONS BY THE STATE AND IS IN NO WAY WARRANTED TO INDICATE THE CONDITIONS OF ACTUAL QUANTITIES OF WORK WHICH WILL BE REQUIRED.

Plotted Date: 6/11/2019

DESIGNER/DRAFTER: JY/RL
CHECKED BY: TC
SCALE AS NOTED

STATE OF CONNECTICUT
DEPARTMENT OF TRANSPORTATION

Filename: ...\FCI-660_CNS_Sheet_0300-0202.dgn

SIGNATURE/BLOCK:
STV Incorporated
185 Plains Road
Suite 208E
Milford, CT 06461

PROJECT TITLE:
NETWORK INFRASTRUCTURE UPGRADE FOR SECURITY NEW HAVEN LINE PHASE 3

TOWN: **STAMFORD TO WESTPORT**

DRAWING TITLE: **CCTV MOUNTING DETAILS SHEET 1 OF 6**

PROJECT NO. 0300-0202
DRAWING NO. FCI-660
SHEET NO. 04.22

NOTES:

1. ALL ANCHORS AND HARDWARE SHALL BE STAINLESS STEEL.
2. DIMENSION SHOWN IS TYPICAL. REFER TO CAMERA SCHEDULES FOR APPROXIMATE CAMERA MOUNTING HEIGHTS OF EACH CAMERA. ALL MOUNTING HEIGHTS SHALL BE VERIFIED IN THE FIELD BY THE CONTRACTOR PRIOR TO FABRICATION OF MOUNTS.
3. DETAILS ARE TYPICAL AND MAY VARY BY LOCATION. VERIFY ALL EXISTING CONDITIONS.
4. STEEL PLATES SHALL BE PAINTED TO MATCH EXISTING CANOPY. SUBMIT COLOR TO ENGINEER FOR APPROVAL.

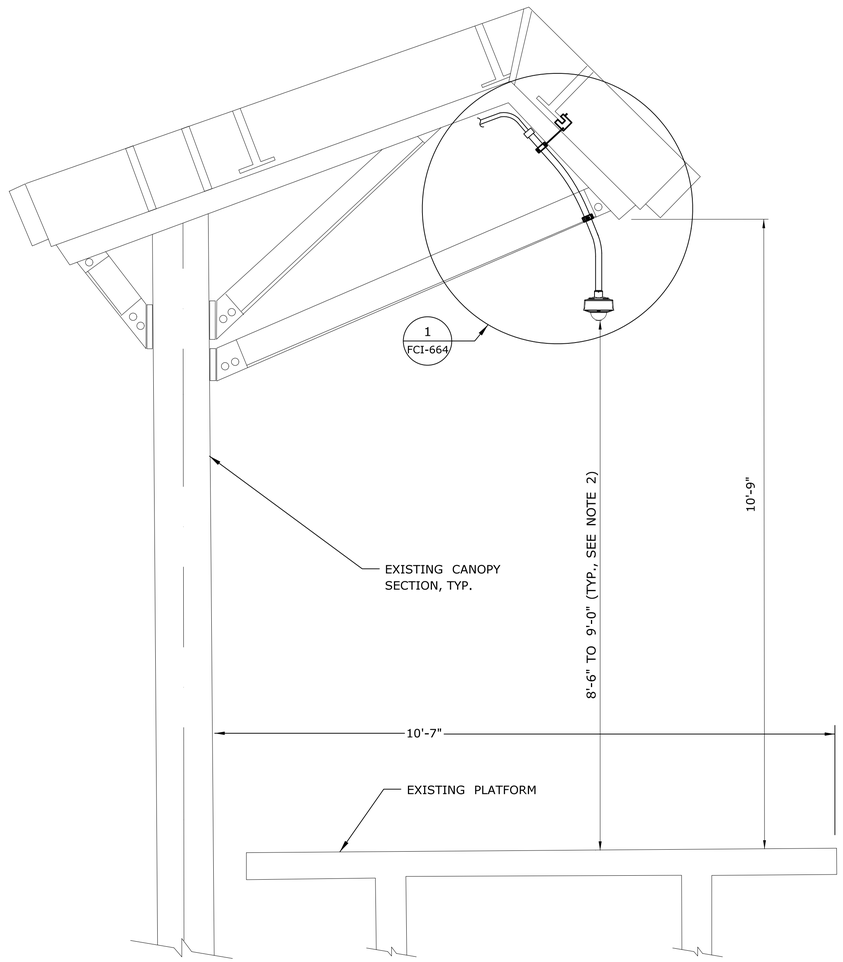

1 FCI-661 **WESTPORT STATION CANOPY MOUNT DETAIL**

NOT TO SCALE

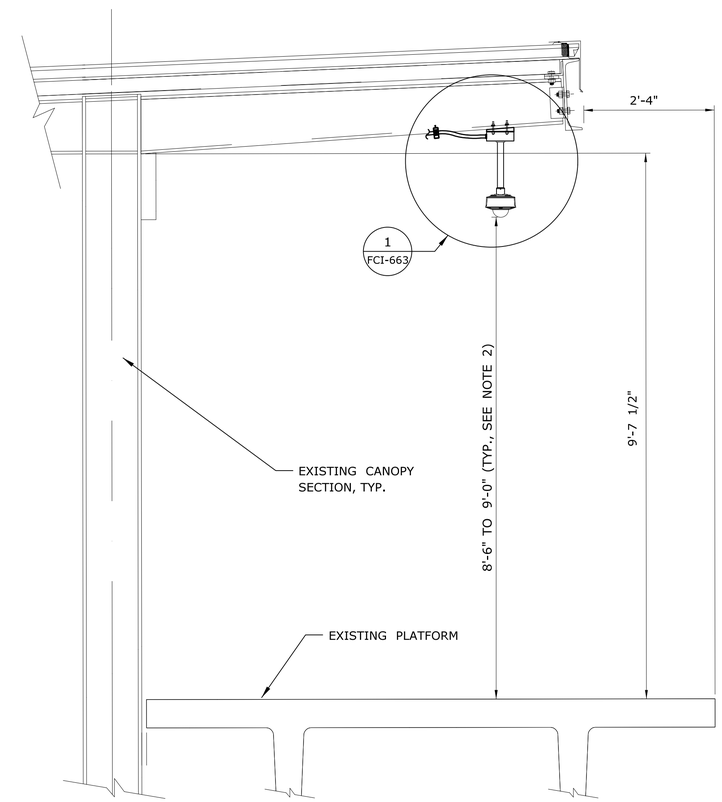

2 FCI-661 **STATION CANOPY MOUNT DETAIL**

NOT TO SCALE

REV.	DATE	REVISION DESCRIPTION	SHEET NO.

THE INFORMATION, INCLUDING ESTIMATED QUANTITIES OF WORK, SHOWN ON THESE SHEETS IS BASED ON LIMITED INVESTIGATIONS BY THE STATE AND IS IN NO WAY WARRANTED TO INDICATE THE CONDITIONS OF ACTUAL QUANTITIES OF WORK WHICH WILL BE REQUIRED.

Plotted Date: 6/11/2019

DESIGNER/DRAFTER: JY/RL

CHECKED BY: TC

SCALE AS NOTED

STATE OF CONNECTICUT
DEPARTMENT OF TRANSPORTATION

Filename: ...\FCI-661_CNS_Sheet_0300-0202.dgn

SIGNATURE/ BLOCK:

STV Incorporated
185 Plains Road
Suite 208E
Milford, CT 06461

PROJECT TITLE:

NETWORK INFRASTRUCTURE UPGRADE FOR SECURITY NEW HAVEN LINE PHASE 3

TOWN: **STAMFORD TO WESTPORT**

DRAWING TITLE: **CCTV MOUNTING DETAILS SHEET 2 OF 6**

PROJECT NO. **0300-0202**

DRAWING NO. **FCI-661**

SHEET NO. **04.23**

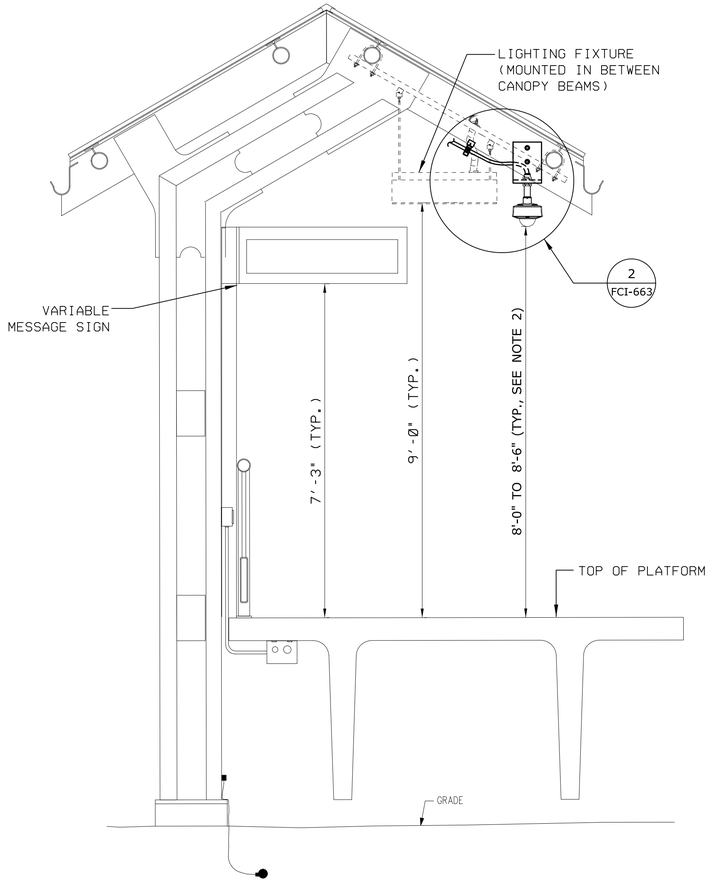

1 FCI-662 **DARIEN STATION CANOPY BEAM MOUNT**

NOT TO SCALE

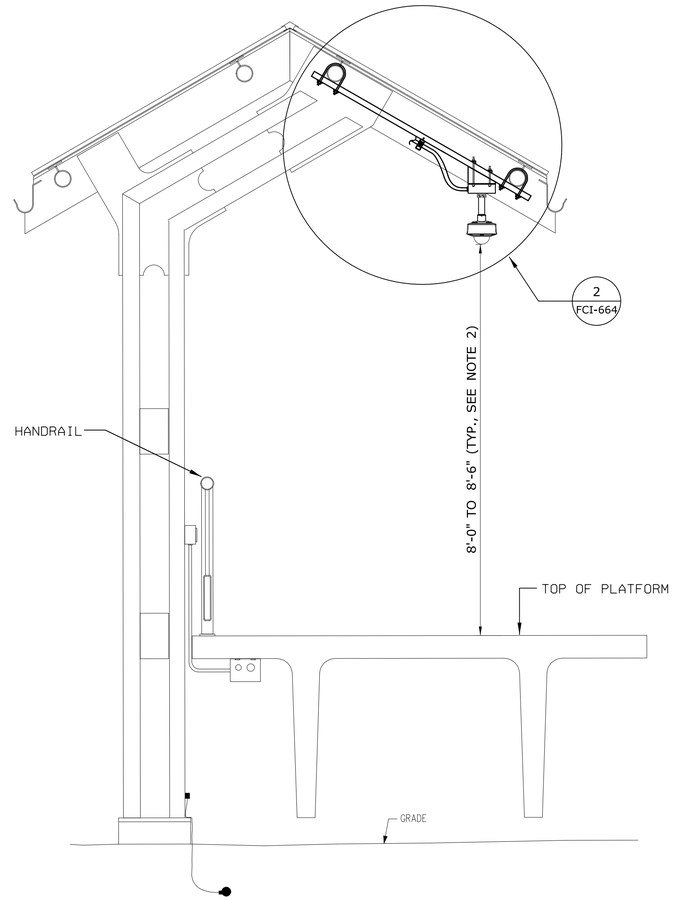

2 FCI-662 **DARIEN STATION MID-SPAN CHANNEL MOUNT**

NOT TO SCALE

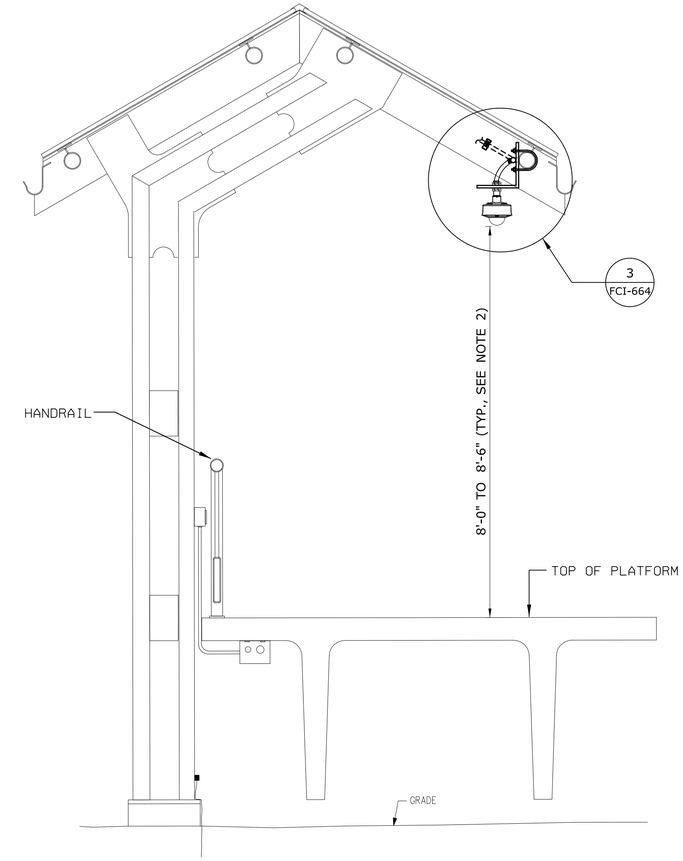

3 FCI-642 **DARIEN STATION MID-SPAN CANOPY MOUNT**

NOT TO SCALE

NOTES:

1. ALL ANCHORS AND HARDWARE SHALL BE STAINLESS STEEL.
2. DIMENSIONS SHOWN ARE TYPICAL. REFER TO CAMERA SCHEDULES FOR APPROXIMATE MOUNTING HEIGHT OF EACH CAMERA. ALL MOUNTING HEIGHTS SHALL BE COORDINATED IN THE FIELD BY THE CONTRACTOR PRIOR TO FABRICATION OF MOUNTS.
3. DETAILS ARE TYPICAL AND MAY VARY BY LOCATION. VERIFY ALL EXISTING CONDITIONS.
4. STEEL PLATES SHALL BE PAINTED TO MATCH EXISTING CANOPY. SUBMIT COLOR TO ENGINEER FOR APPROVAL.

N.I.C.

REV.	DATE	REVISION DESCRIPTION	SHEET NO.

THE INFORMATION, INCLUDING ESTIMATED QUANTITIES OF WORK, SHOWN ON THESE SHEETS IS BASED ON LIMITED INVESTIGATIONS BY THE STATE AND IS IN NO WAY WARRANTED TO INDICATE THE CONDITIONS OF ACTUAL QUANTITIES OF WORK WHICH WILL BE REQUIRED.

Plotted Date: 6/25/2019

DESIGNER/DRAFTER: JY/RL

CHECKED BY: TC

SCALE AS NOTED

STATE OF CONNECTICUT
DEPARTMENT OF TRANSPORTATION

Filename: ...\FCI-662_CNS_Sheet_0300-0202.dgn

SIGNATURE/ BLOCK:

STV Incorporated
185 Plains Road
Suite 208E
Milford, CT 06461

PROJECT TITLE:

NETWORK INFRASTRUCTURE UPGRADE FOR SECURITY NEW HAVEN LINE PHASE 3

TOWN: **STAMFORD TO WESTPORT**

DRAWING TITLE: **CCTV MOUNTING DETAILS SHEET 3 OF 6**

PROJECT NO. **0300-0202**

DRAWING NO. **FCI-662**

SHEET NO. **04.24**

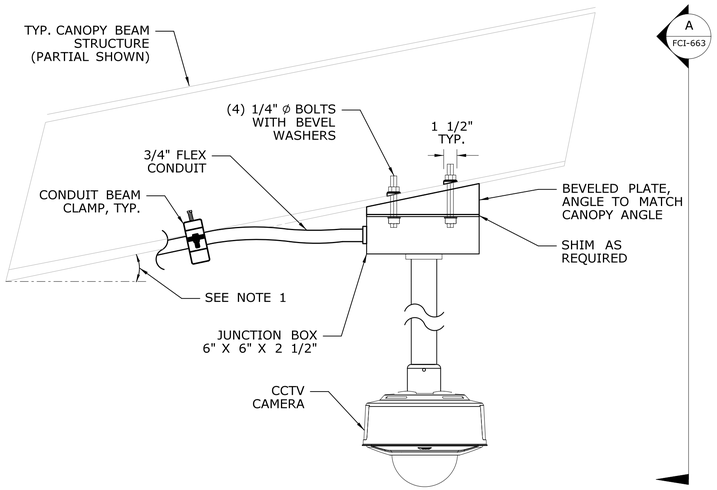

1 FCI-663 **CANOPY BEAM MOUNT - STATIONS**
NOT TO SCALE

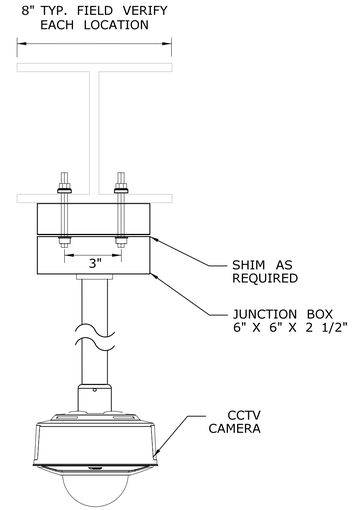

A - **FRONT VIEW**
NOT TO SCALE

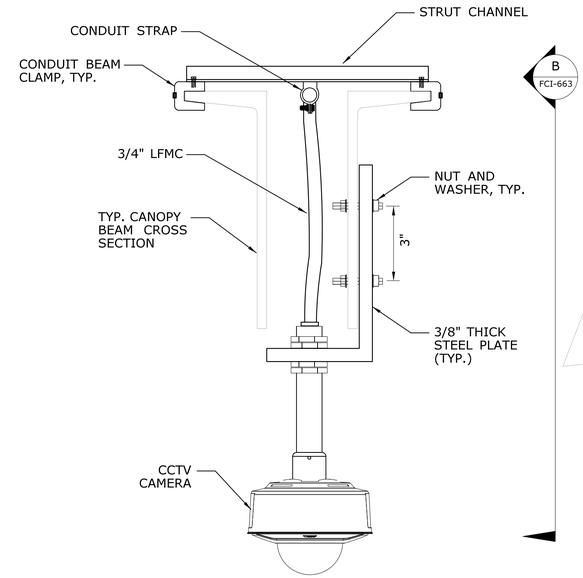

2 FCI-663 **CANOPY BEAM MOUNT - STATION**
NOT TO SCALE

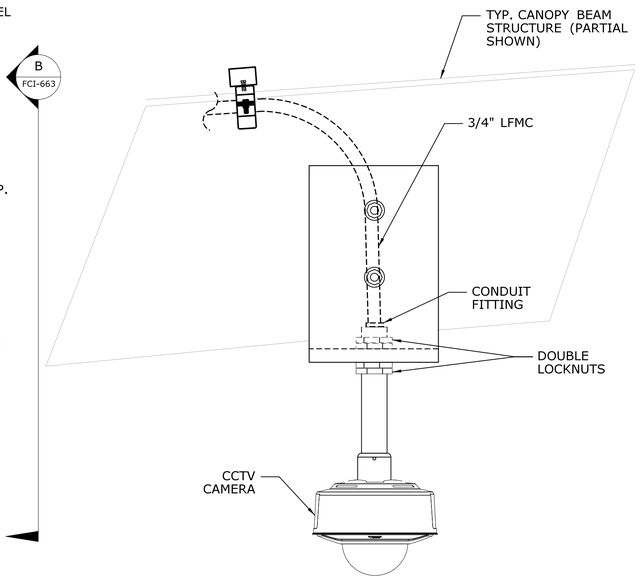

B - **SIDE VIEW**
NOT TO SCALE

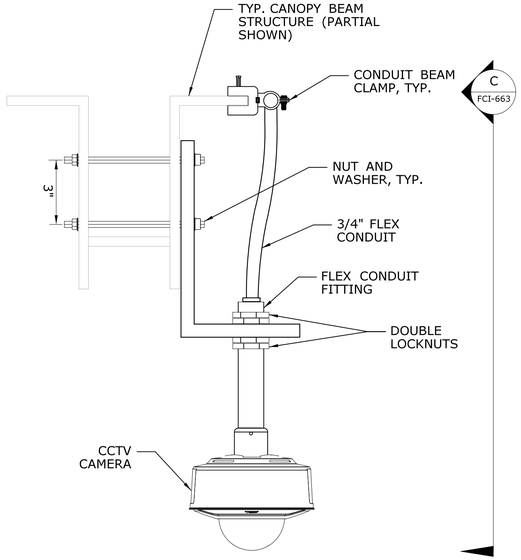

3 FCI-663 **CANOPY BEAM MOUNT - STATION**
NOT TO SCALE

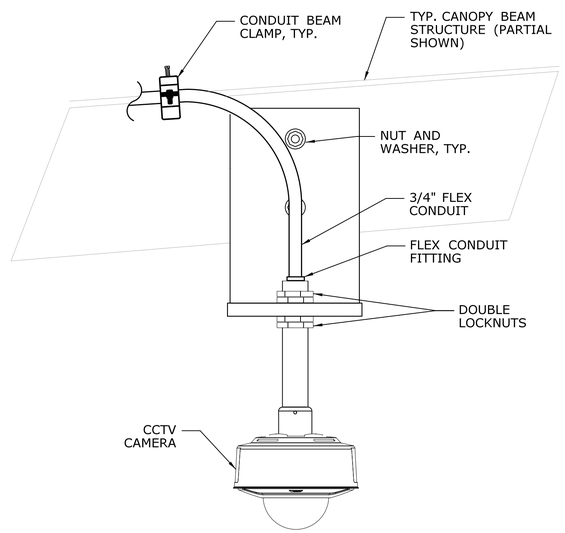

C - **FRONT VIEW**
NOT TO SCALE

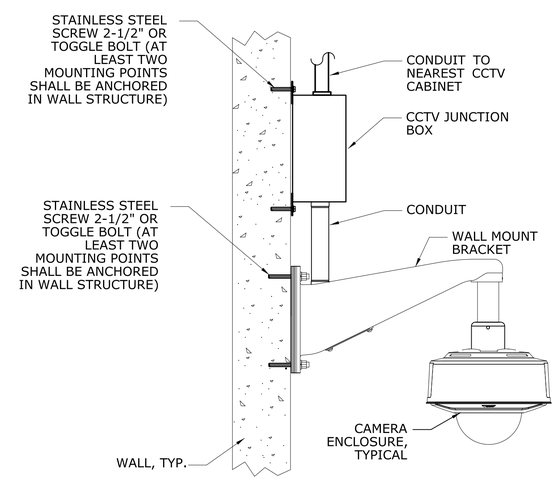

4 FCI-663 **WALL MOUNT DETAIL**
NOT TO SCALE

NOTES:

1. CONTRACTOR SHALL VERIFY EXACT ANGLE AT EACH LOCATION.
2. CCTV CAMERAS MOUNTED TO CANOPY SHALL BE MOUNTED AS CLOSE TO CANOPY EDGE AS POSSIBLE WHILE MAINTAINING CLEARANCE FROM THE TRAIN ENVELOPE AND DESIRED MOUNTING HEIGHT ABOVE PLATFORM, AS SHOWN ON CAMERA SCHEDULES. COORDINATE ALL CAMERA LOCATIONS WITH FIELD CONDITIONS.
3. DETAILS ARE TYPICAL. CONTRACTOR SHALL SUBMIT COMPLETE SHOP DRAWINGS INCLUDING MATERIALS, DIMENSIONS, DETAILS, AND SECTIONS COORDINATED WITH FIELD CONDITIONS.
4. STEEL PLATES SHALL BE PAINTED TO MATCH EXISTING CANOPY. SUBMIT COLOR TO ENGINEER FOR APPROVAL.

REV.	DATE	REVISION DESCRIPTION	SHEET NO.

THE INFORMATION, INCLUDING ESTIMATED QUANTITIES OF WORK, SHOWN ON THESE SHEETS IS BASED ON LIMITED INVESTIGATIONS BY THE STATE AND IS IN NO WAY WARRANTED TO INDICATE THE CONDITIONS OF ACTUAL QUANTITIES OF WORK WHICH WILL BE REQUIRED.

Plotted Date: 6/11/2019

DESIGNER/DRAFTER: JY/RL
CHECKED BY: TC
SCALE AS NOTED

STATE OF CONNECTICUT
DEPARTMENT OF TRANSPORTATION

Filename: ...\FCI-663_CNS_Sheet_0300-0202.dgn

SIGNATURE/BLOCK:
STV Incorporated
185 Plains Road
Suite 208E
Milford, CT 06461

PROJECT TITLE:
NETWORK INFRASTRUCTURE UPGRADE FOR SECURITY NEW HAVEN LINE PHASE 3

TOWN: **STAMFORD TO WESTPORT**

DRAWING TITLE: **CCTV MOUNTING DETAILS SHEET 4 OF 6**

PROJECT NO. 0300-0202
DRAWING NO. FCI-663
SHEET NO. 04.25

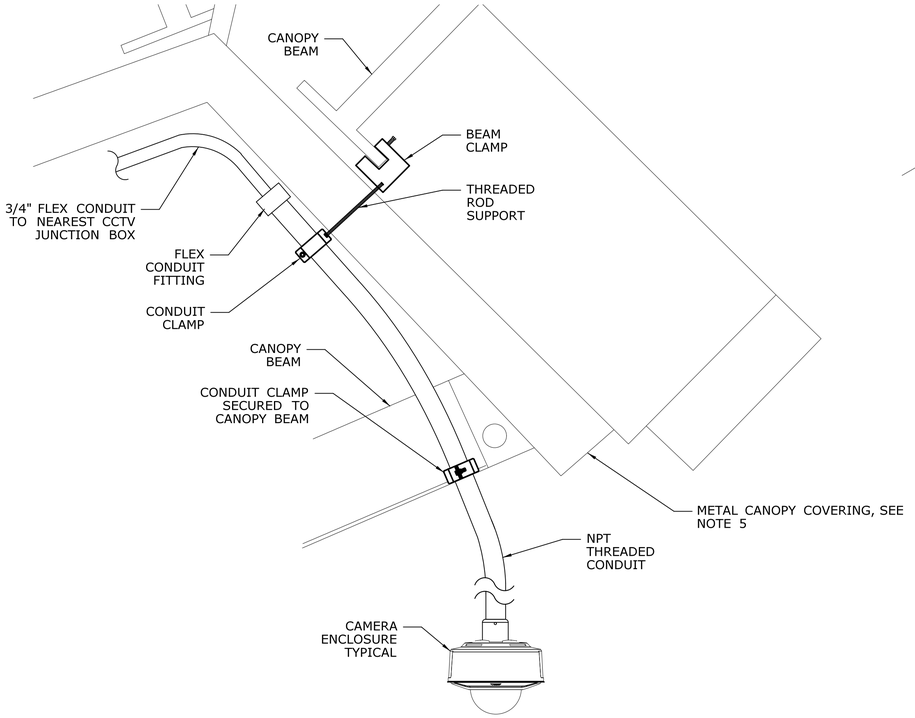

1 / FCI-664 **CANOPY BEAM MOUNT - WESTPORT STATION**
NOT TO SCALE

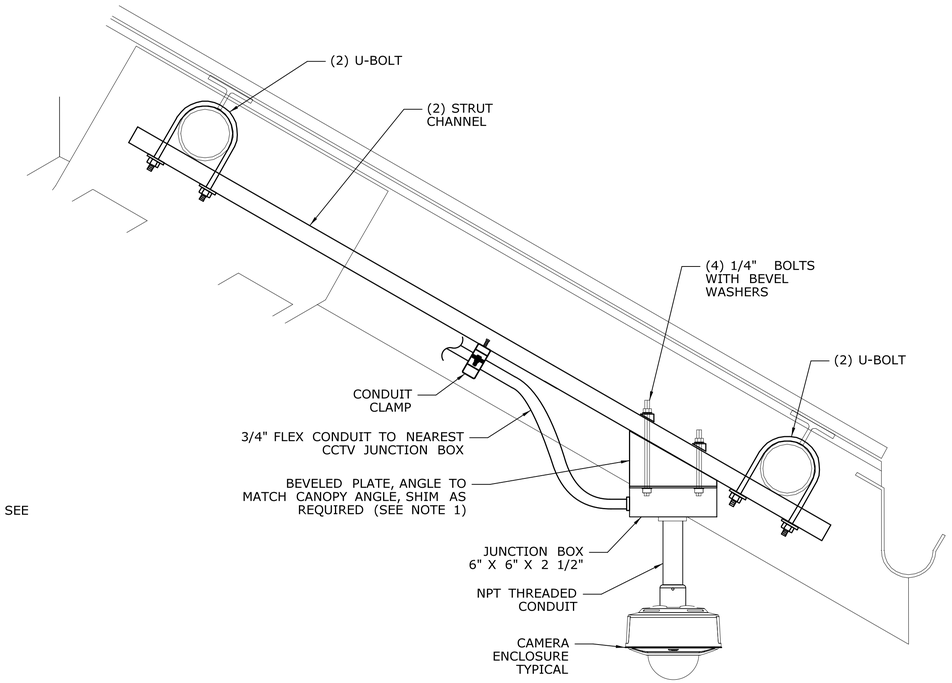

2 / FCI-664 **MIDSPAN CHANNEL MOUNT**
NOT TO SCALE

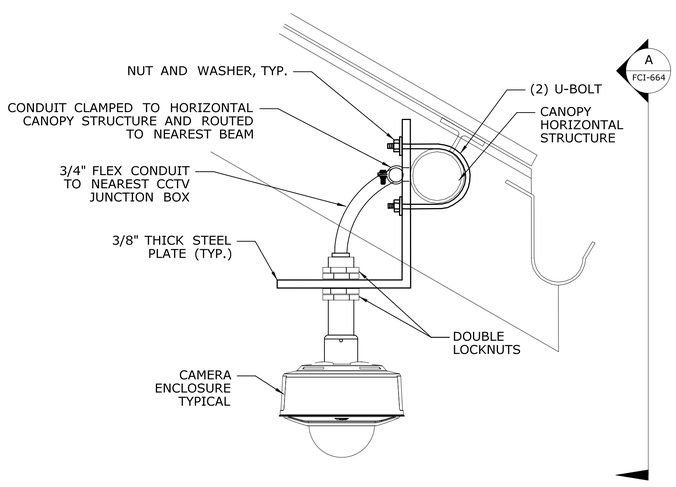

3 / FCI-664 **MID-SPAN CANOPY MOUNT**
NOT TO SCALE

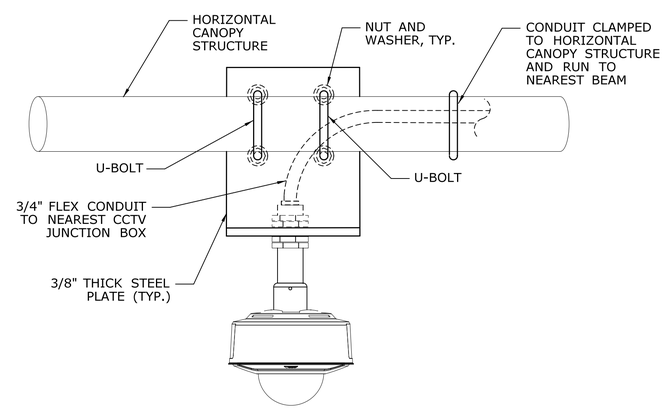

A / - **FRONT VIEW**
NOT TO SCALE

NOTES:

1. CONTRACTOR SHALL VERIFY EXACT ANGLE AT EACH LOCATION.
2. CCTV CAMERAS MOUNTED TO CANOPY SHALL BE MOUNTED AS CLOSE TO CANOPY EDGE AS POSSIBLE WHILE MAINTAINING CLEARANCE FROM THE TRAIN ENVELOPE AND DESIRED MOUNTING HEIGHT ABOVE PLATFORM, AS SHOWN ON CAMERA SCHEDULES. COORDINATE ALL CAMERA LOCATIONS WITH FIELD CONDITIONS.
3. DETAILS ARE TYPICAL. CONTRACTOR SHALL SUBMIT COMPLETE SHOP DRAWINGS INCLUDING MATERIALS, DIMENSIONS, DETAILS, AND SECTIONS COORDINATED WITH FIELD CONDITIONS.
4. STEEL PLATES SHALL BE PAINTED TO MATCH EXISTING CANOPY. SUBMIT COLOR TO ENGINEER FOR APPROVAL.
5. METAL CANOPY COVERING AT WESTPORT STATION SHALL BE REMOVED AND RE-INSTALLED FOR CAMERA INSTALLATION. MODIFICATIONS SHALL MATCH EXISTING CONDITIONS.

REV.	DATE	REVISION DESCRIPTION	SHEET NO.

THE INFORMATION, INCLUDING ESTIMATED QUANTITIES OF WORK, SHOWN ON THESE SHEETS IS BASED ON LIMITED INVESTIGATIONS BY THE STATE AND IS IN NO WAY WARRANTED TO INDICATE THE CONDITIONS OF ACTUAL QUANTITIES OF WORK WHICH WILL BE REQUIRED.

Plotted Date: 6/25/2019

DESIGNER/DRAFTER: JY/RL
CHECKED BY: TC
SCALE AS NOTED

STATE OF CONNECTICUT
DEPARTMENT OF TRANSPORTATION

Filename: ...\FCI-664_CNS_Sheet_0300-0202.dgn

SIGNATURE/BLOCK:
STV Incorporated
185 Plains Road
Suite 208E
Milford, CT 06461

PROJECT TITLE:
NETWORK INFRASTRUCTURE UPGRADE FOR SECURITY NEW HAVEN LINE PHASE 3

TOWN: **STAMFORD TO WESTPORT**

DRAWING TITLE: **CCTV MOUNTING DETAILS SHEET 5 OF 6**

PROJECT NO. 0300-0202
DRAWING NO. FCI-664
SHEET NO. 04.26

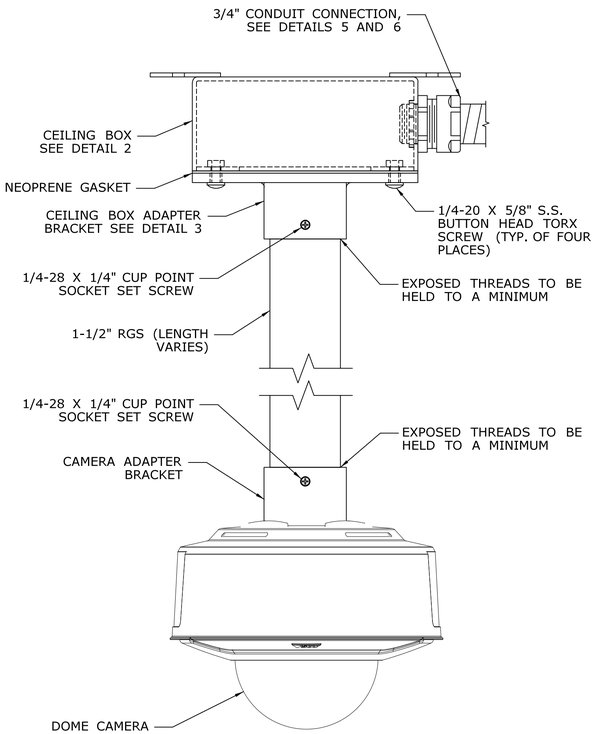

1 FCI-665 **PENDANT MOUNT ASSEMBLY DETAIL**
NOT TO SCALE

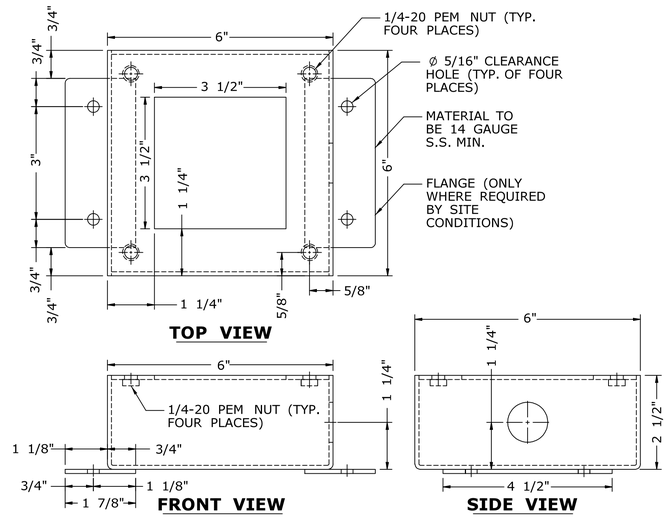

2 FCI-665 **PENDANT MOUNT ASSEMBLY JUNCTION BOX DETAILS**
NOT TO SCALE

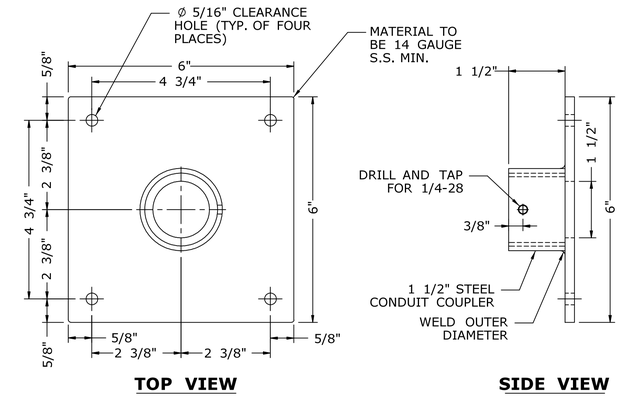

3 FCI-665 **PENDANT MOUNT ASSEMBLY ADAPTOR BRACKET**
NOT TO SCALE

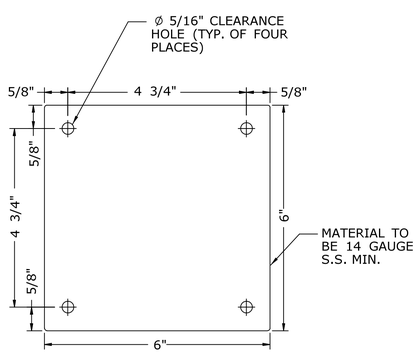

4 FCI-665 **JUNCTION BOX COVER PLATE**
NOT TO SCALE

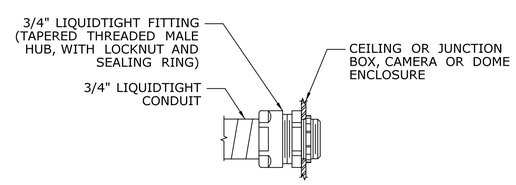

5 FCI-665 **TYP. LIQUIDTIGHT CONDUIT CONNECTION**
NOT TO SCALE

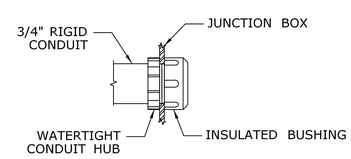

6 FCI-665 **TYP. RIGID CONDUIT CONNECTION**
NOT TO SCALE

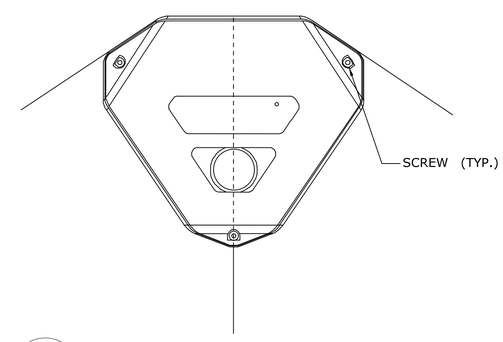

7 FCI-665 **ELEVATOR CORNER MOUNT DETAIL**
NOT TO SCALE

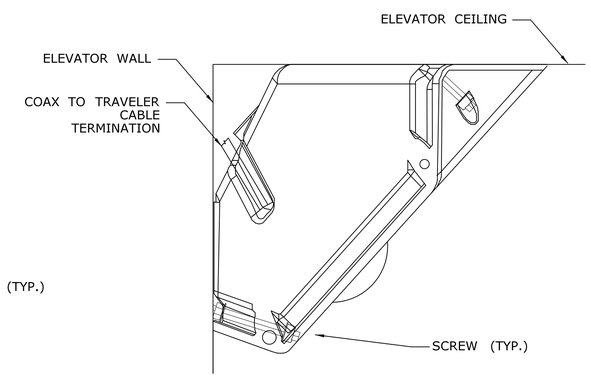

8 FCI-665 **ELEVATOR CORNER MOUNT SIDE DETAIL**
NOT TO SCALE

NOTES:

1. DETAILS ARE TYPICAL. CONTRACTOR SHALL SUBMIT COMPLETE SHOP DRAWINGS INCLUDING MATERIALS, DIMENSIONS, DETAILS, AND SECTIONS COORDINATED WITH ALL FIELD CONDITIONS.

REV.	DATE	REVISION DESCRIPTION	SHEET NO.

THE INFORMATION, INCLUDING ESTIMATED QUANTITIES OF WORK, SHOWN ON THESE SHEETS IS BASED ON LIMITED INVESTIGATIONS BY THE STATE AND IS IN NO WAY WARRANTED TO INDICATE THE CONDITIONS OF ACTUAL QUANTITIES OF WORK WHICH WILL BE REQUIRED.

Plotted Date: 6/11/2019

DESIGNER/DRAFTER: JY/RL
CHECKED BY: TC
SCALE AS NOTED

STATE OF CONNECTICUT
DEPARTMENT OF TRANSPORTATION

Filename: ...\FCI-665_CNS_Sheet_0300-0202.dgn

SIGNATURE/BLOCK:
STV Incorporated
185 Plains Road
Suite 208E
Milford, CT 06461

PROJECT TITLE:
NETWORK INFRASTRUCTURE UPGRADE FOR SECURITY NEW HAVEN LINE PHASE 3

TOWN: STAMFORD TO WESTPORT

DRAWING TITLE: CCTV MOUNTING DETAILS SHEET 6 OF 6

PROJECT NO. 0300-0202
DRAWING NO. FCI-665
SHEET NO. 04.27

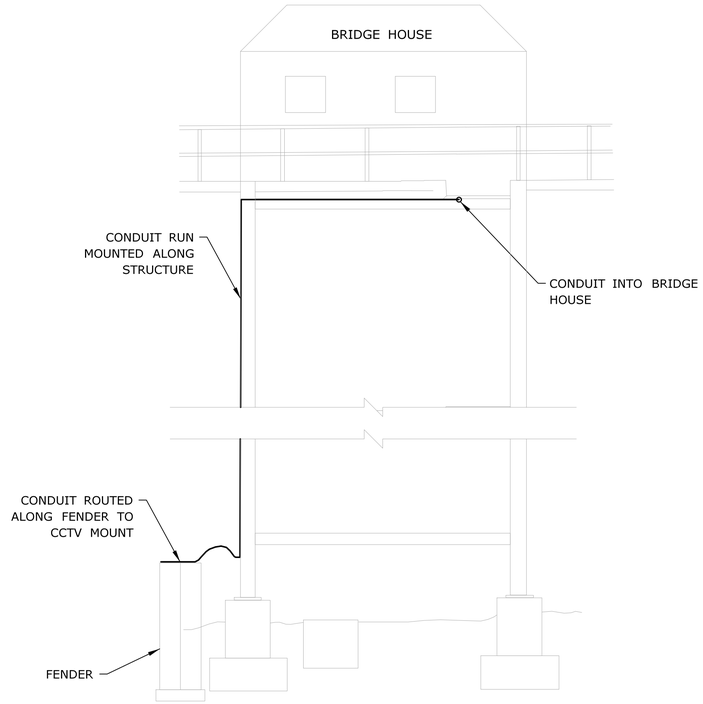

BRIDGE ACCESS STAIRWAY SOUTH ELEVATION

NOT TO SCALE

REV.	DATE	REVISION DESCRIPTION	SHEET NO.

THE INFORMATION, INCLUDING ESTIMATED QUANTITIES OF WORK, SHOWN ON THESE SHEETS IS BASED ON LIMITED INVESTIGATIONS BY THE STATE AND IS IN NO WAY WARRANTED TO INDICATE THE CONDITIONS OF ACTUAL QUANTITIES OF WORK WHICH WILL BE REQUIRED.

Plotted Date: 6/11/2019

DESIGNER/DRAFTER: JY

CHECKED BY: TC

NOT TO SCALE

STATE OF CONNECTICUT
DEPARTMENT OF TRANSPORTATION

Filename: ..\FCI-666_FA_Sheet_0300-0202.dgn

SIGNATURE/ BLOCK:

STV Incorporated
185 Plains Road
Suite 208E
Milford, CT 06461

PROJECT TITLE:

NETWORK INFRASTRUCTURE UPGRADE FOR SECURITY NEW HAVEN LINE PHASE 3

TOWN: **STAMFORD TO WESTPORT**

DRAWING TITLE: **SAGA BRIDGE CCTV MOUNTING DETAILS SHEET 1 OF 3**

PROJECT NO. **0300-0202**

DRAWING NO. **FCI-666**

SHEET NO. **04.28**

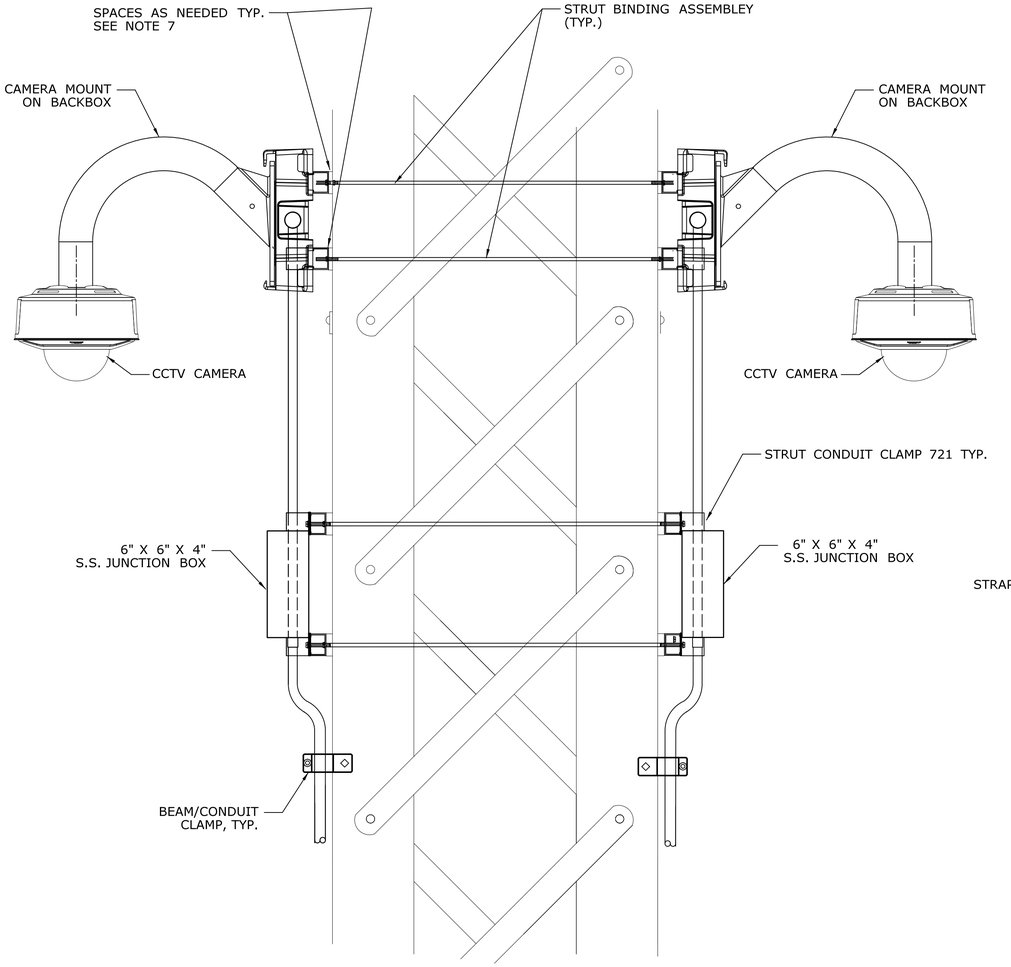

SAGA BRIDGE CATENARY POLE MOUNT DETAIL

(FRONT FACING TOWARD TRAIN)

NOT TO SCALE

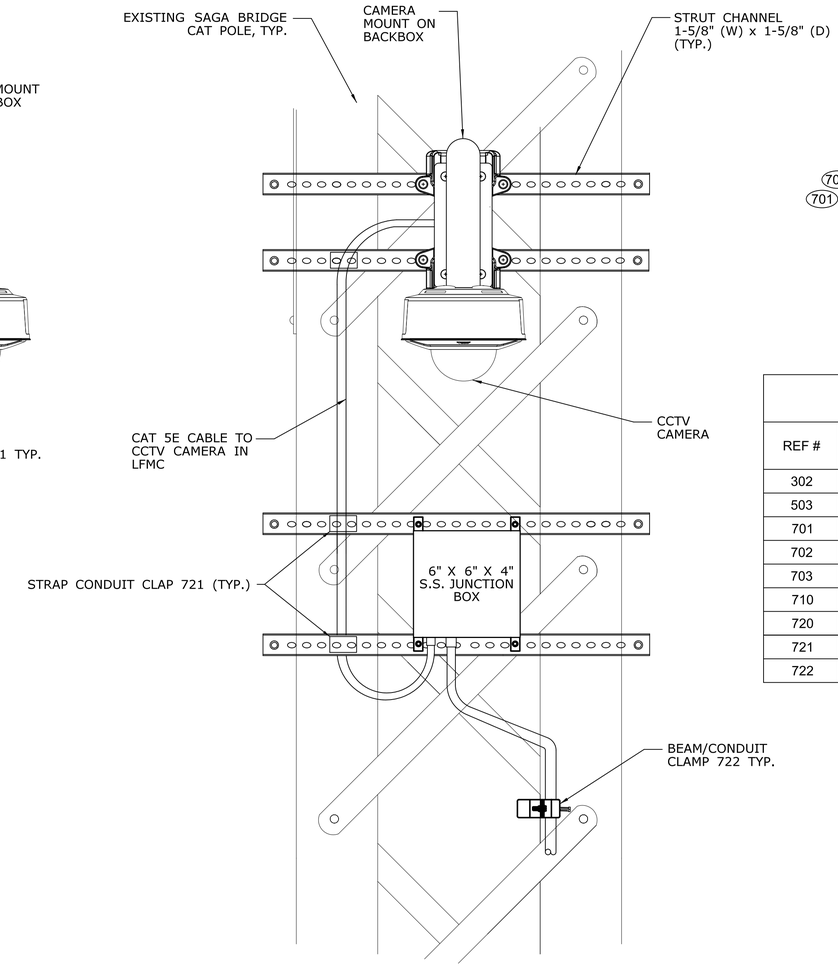

SIDE VIEW

NOT TO SCALE

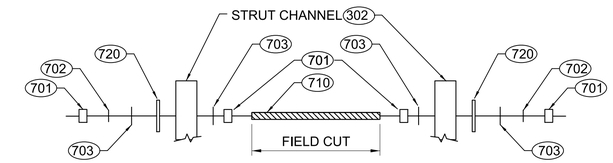

PLAN

TYPICAL STRUT BINDING ASSEMBLY

BILL OF MATERIALS

REF #	DESCRIPTION	MANUFACTURER PART # / DETAIL (OR APPROVED EQUAL)
302	1 5/8" CHANNEL, 12 GAUGE	UNISTRUT P1000HS
503	CONDUIT CLAMP (NOTE 4)	UNISTRUT P1121
701	1/2" HEX NUT	PORTLAND BOLT
702	1/2" LOCK WASHER	HUBBELL / CHANCE 4035
703	1/2" WASHER	HUBBELL / CHANCE PS6803
710	1/2" Ø THREADED ROD	UNISTRUT HTHR050
720	FLAT PLATE FITTING	UNISTRUT P1064
721	STRUT CONDUIT CLAMPS	UNISTRUT P112ST
722	BEAM/CONDUIT CLAMP	CALBRITE 560200BC00 BL140-SS4

NOTES:

1. MINIMUM CONDUIT SIZE SHALL BE 3/4".
2. BOLTS, WASHERS, AND ALL OTHER MOUNTING HARDWARE AT SAGA BRIDGE SHALL BE STAINLESS STEEL. STRUT CHANNEL SHALL BE STAINLESS STEEL.
3. ALL CABLES ARE IN CONDUITS.
4. DETAILS ARE TYPICAL. CONTRACTOR SHALL SUBMIT COMPLETE SHOP DRAWINGS INCLUDING MATERIALS, DIMENSIONS, DETAILS, AND SECTIONS COORDINATED WITH ALL FIELD CONDITIONS.
5. TORQUE ALL FASTENERS IN ACCORDANCE WITH MANUFACTURERS RECOMMENDATIONS.
6. LENGTH OF STRUT CHANNEL VARIES DEPENDING ON CATENARY STRUCTURE TYPE. CONTRACTOR SHALL VERIFY ALL MEASUREMENTS PRIOR TO FABRICATION AND CONSTRUCTION.
7. SPACERS SHALL BE BOLTED TO STRUTS AS REQUIRED TO ALLOW FOR PROPER FIT ON RIVETED LATTICE STRUCTURES. SPACERS SHALL BE STAINLESS STEEL.

REV.	DATE	REVISION DESCRIPTION	SHEET NO.

THE INFORMATION, INCLUDING ESTIMATED QUANTITIES OF WORK, SHOWN ON THESE SHEETS IS BASED ON LIMITED INVESTIGATIONS BY THE STATE AND IS IN NO WAY WARRANTED TO INDICATE THE CONDITIONS OF ACTUAL QUANTITIES OF WORK WHICH WILL BE REQUIRED.

Plotted Date: 6/11/2019

DESIGNER/DRAFTER: JY

CHECKED BY: TC

SCALE AS NOTED

STATE OF CONNECTICUT
DEPARTMENT OF TRANSPORTATION

Filename: ..\FCI-667_FA_Sheet_0300-0202.dgn

SIGNATURE/BLOCK:

STV Incorporated
185 Plains Road
Suite 208E
Milford, CT 06461

PROJECT TITLE:

NETWORK INFRASTRUCTURE UPGRADE FOR SECURITY NEW HAVEN LINE PHASE 3

TOWN: **STAMFORD TO WESTPORT**

DRAWING TITLE: **SAGA BRIDGE CCTV MOUNTING DETAILS SHEET 2 OF 3**

PROJECT NO. **0300-0202**

DRAWING NO. **FCI-667**

SHEET NO. **04.29**

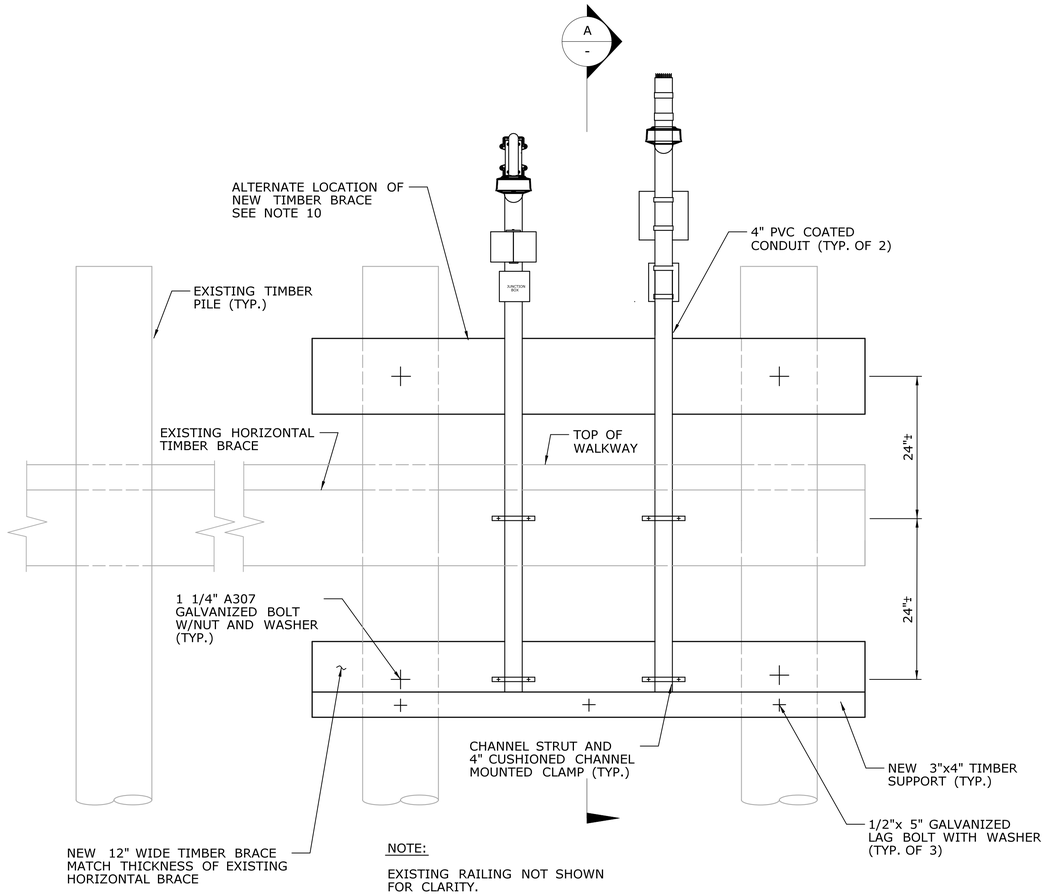

NOTE:

EXISTING RAILING NOT SHOWN FOR CLARITY.

ELEVATION

TYPICAL PTZ CAMERA INSTALLATION

N.T.S.

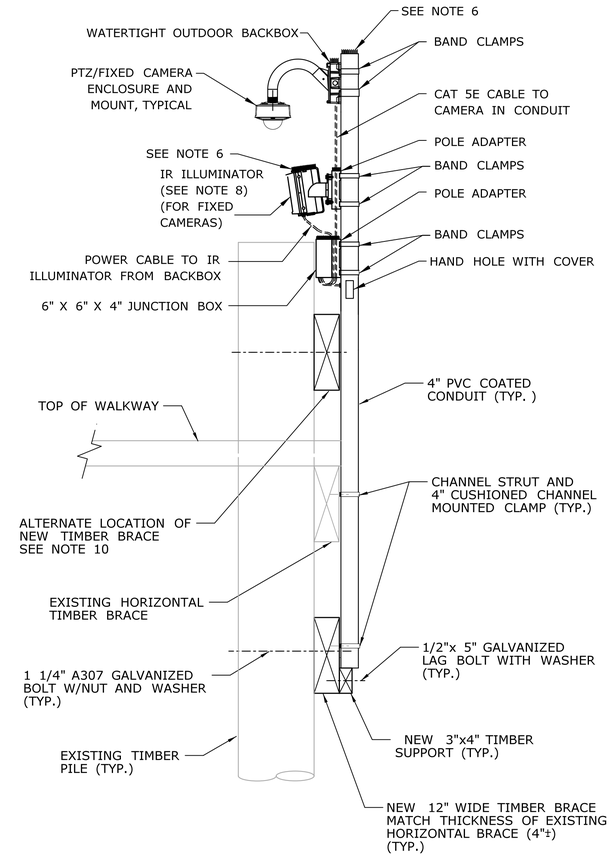

A
-

SECTION

N.T.S.

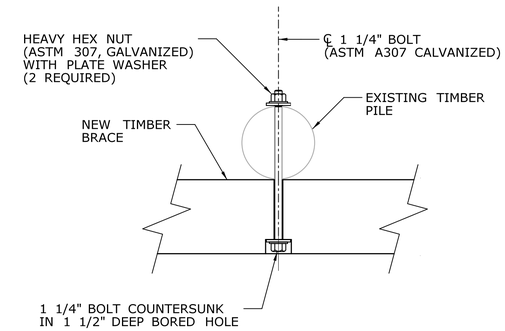

PLAN

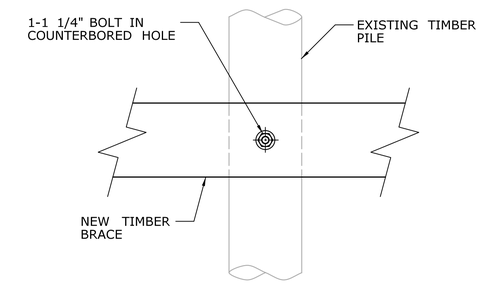

ELEVATION

TIMBER CONNECTION DETAIL

N.T.S.

NOTES:

1. ALL ANCHORS AND HARDWARE SHALL BE STAINLESS STEEL.
2. TIMBER MEMBERS SHALL FIT TIGHTLY AGAINST EACH OTHER AND AGAINST PILES. ENDS OF TIMBER SHALL BE CUT, TREATED AND FITTED TO PROVIDE MAXIMUM BEARING AGAINST ADJACENT MEMBERS.
3. PROVIDE TIMBER SPACERS AND BLOCKING AS NECESSARY.
4. BOLT HOLES IN TIMBER SHALL BE NO MORE THAN 3/8" GREATER THAN THE NOMINAL BOLT DIAMETER.
5. RECESS ALL HARDWARE BEHIND THE FACE OF TIMBER. COUNTERBORE HOLES FOR BOLTS AS NECESSARY.
6. THE CONTRACTOR SHALL PROVIDE BIRD DETERRENT SPIKES ON THE SAGA BRIDGE CCTV CAMERAS AND JUNCTION BOXES AS SHOWN AND AS DESCRIBED IN THE SPECIFICATIONS.
7. ALL CABLES SHALL BE IN CONDUITS.
8. PROVIDE TWO (2) IR UNITS AT FIXED LOCATIONS.
9. DETAILS ARE TYPICAL. CONTRACTOR SHALL SUBMIT COMPLETE SHOP DRAWINGS INCLUDING MATERIALS, DIMENSIONS, DETAILS, AND SECTIONS COORDINATED WITH ALL FIELD CONDITIONS.
10. IF CAMERAS ARE MOUNTED ON TIMBER SUPPORTS AT END OF FENDER SYSTEM, THE TIMBER BRACE SHALL BE INSTALLED ABOVE THE EXISTING HORIZONTAL BRACE. NEW TIMBER SUPPORT SHALL BE ATTACHED TO EXISTING HORIZONTAL TIMBER BRACE.

REV.	DATE	REVISION DESCRIPTION	SHEET NO.

THE INFORMATION, INCLUDING ESTIMATED QUANTITIES OF WORK, SHOWN ON THESE SHEETS IS BASED ON LIMITED INVESTIGATIONS BY THE STATE AND IS IN NO WAY WARRANTED TO INDICATE THE CONDITIONS OF ACTUAL QUANTITIES OF WORK WHICH WILL BE REQUIRED.

Plotted Date: 6/11/2019

DESIGNER/DRAFTER: EM/MN

CHECKED BY: TC

SCALE AS NOTED

STATE OF CONNECTICUT
DEPARTMENT OF TRANSPORTATION

Filename: ...\FCI-668_CNS_Sheet_0300-0202.dgn

SIGNATURE/BLOCK:

STV Incorporated
185 Plains Road
Suite 208E
Milford, CT 06461

PROJECT TITLE:

NETWORK INFRASTRUCTURE UPGRADE FOR SECURITY NEW HAVEN LINE PHASE 3

TOWN: STAMFORD TO WESTPORT

DRAWING TITLE: SAGA BRIDGE CCTV MOUNTING DETAILS SHEET 3 OF 3

PROJECT NO. 0300-0202

DRAWING NO. FCI-668

SHEET NO. 04.30

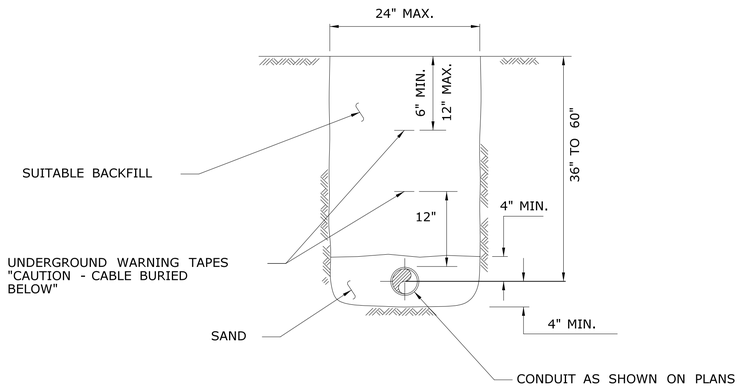

1 / FCI-670 CONDUIT TRENCHING DETAILS

NOT TO SCALE

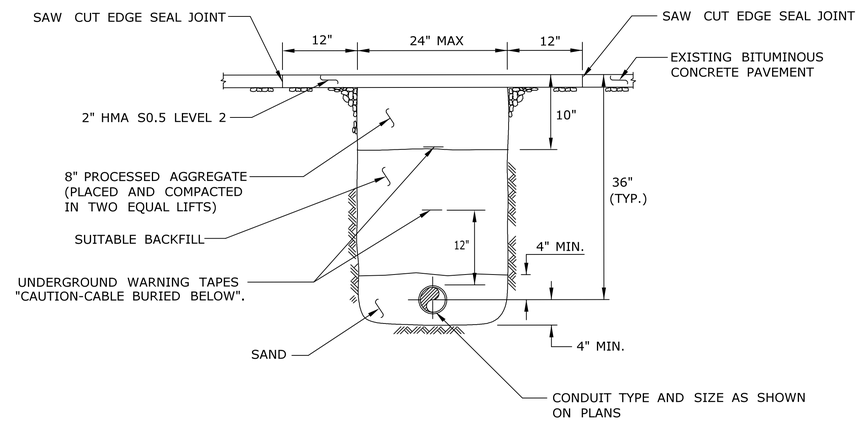

2 / FCI-670 CONDUIT UNDER BITUMINOUS CONCRETE SIDEWALK OR DRIVEWAY

NOT TO SCALE

NOTES:

1. SEE CONNECTICUT DOT STANDARD TRENCHING DETAILS, HIGHWAY OPERATIONS SHEET IMS-05.
2. PENETRATIONS SHALL USE APPROVED FIRESTOP SEALANT AS REQUIRED BY NESC, NFPA, OR LOCAL REQUIREMENTS.
3. DETAIL FOR USE AT LOCATIONS WHERE CONDUITS ARE SUBJECT TO DEFLECTION OR WHEN STANDARD EXPANSION/DEFLECTION FITTING CANNOT BE USED. PROVIDE BONDING CABLE BETWEEN METAL CONDUIT SECTIONS FOR CONTINUOUS GROUND.
4. SEE ADDITIONAL NOTES ON DWG. FCI-671.

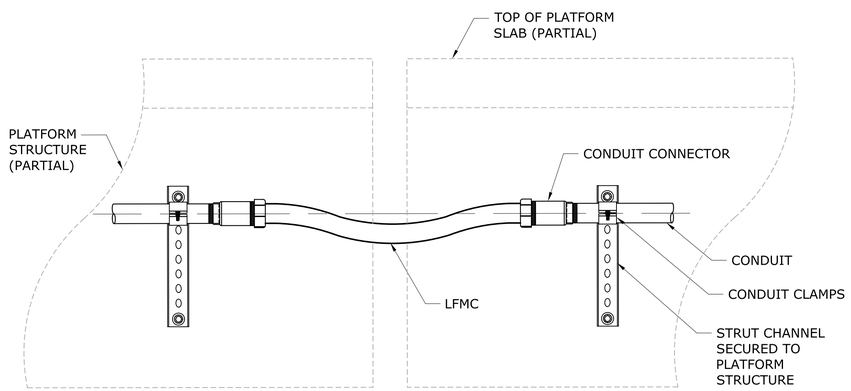

3 / FCI-670 CONDUIT DEFLECTION DETAILS

NOT TO SCALE SEE NOTE 3

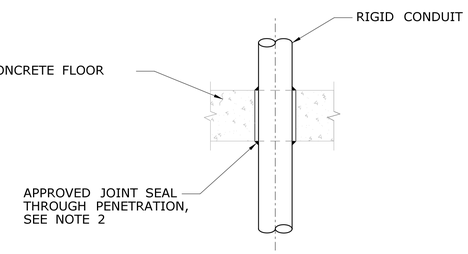

4 / FCI-670 FLOOR PENETRATION DETAIL

NOT TO SCALE

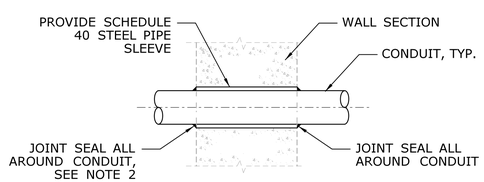

5 / FCI-670 WALL PENETRATION DETAIL

NOT TO SCALE

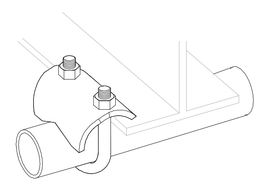

6 / FCI-670 TYP. BEAM CLAMP

NOT TO SCALE

REV.	DATE	REVISION DESCRIPTION	SHEET NO.
-	-	-	-
-	-	-	-
-	-	-	-
-	-	-	-
-	-	-	-
-	-	-	-

THE INFORMATION, INCLUDING ESTIMATED QUANTITIES OF WORK, SHOWN ON THESE SHEETS IS BASED ON LIMITED INVESTIGATIONS BY THE STATE AND IS IN NO WAY WARRANTED TO INDICATE THE CONDITIONS OF ACTUAL QUANTITIES OF WORK WHICH WILL BE REQUIRED.

Plotted Date: 6/11/2019

DESIGNER/DRAFTER: JY/RL

CHECKED BY: TC

SCALE AS NOTED

STATE OF CONNECTICUT
DEPARTMENT OF TRANSPORTATION

Filename: ...\FCI-670_CNS_Sheet_0300-0202.dgn

SIGNATURE/BLOCK:

STV Incorporated
185 Plains Road
Suite 208E
Milford, CT 06461

PROJECT TITLE:

NETWORK INFRASTRUCTURE UPGRADE FOR SECURITY NEW HAVEN LINE PHASE 3

TOWN: **STAMFORD TO WESTPORT**

DRAWING TITLE: **CONDUIT DETAILS SHEET 1 OF 2**

PROJECT NO. **0300-0202**

DRAWING NO. **FCI-670**

SHEET NO. **04.31**

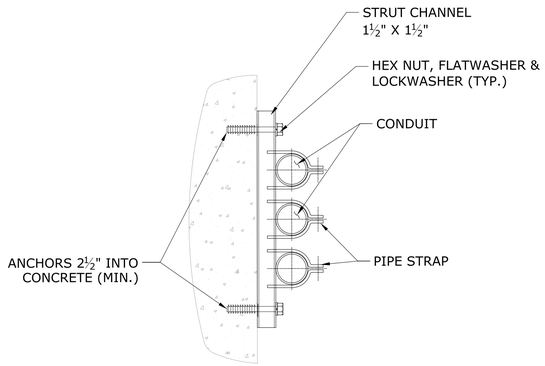

1 FCI-671 **TYPICAL STRUT CHANNEL WALL MOUNT**
NOT TO SCALE

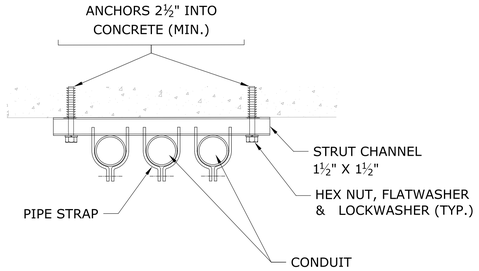

2 FCI-671 **TYPICAL STRUT CHANNEL CEILING MOUNT**
NOT TO SCALE

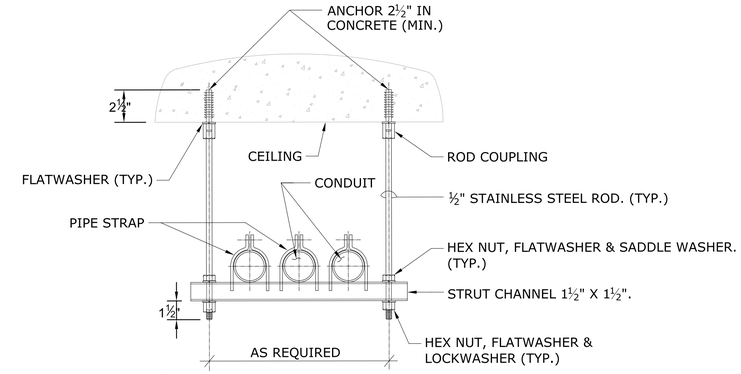

3 FCI-671 **TRAPEZE CONDUIT SUPPORT**
NOT TO SCALE

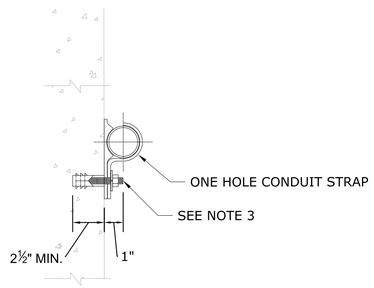

4 FCI-671 **INDIVIDUAL CONDUIT MOUNTING FOR VERTICAL SURFACES**
NOT TO SCALE SEE NOTE 1

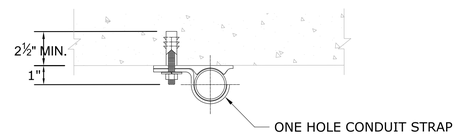

5 FCI-671 **INDIVIDUAL CONDUIT MOUNTING FOR HORIZONTAL SURFACES**
NOT TO SCALE SEE NOTE 1

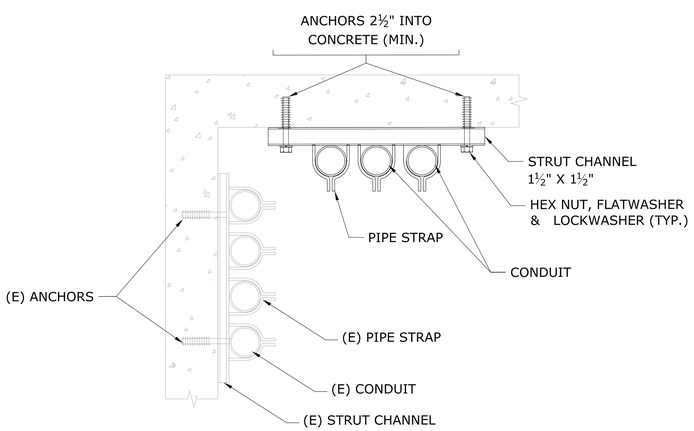

6 FCI-671 **UNDER PLATFORM STRUT CHANNEL SUPPORT MOUNT**
NOT TO SCALE SEE NOTE 1

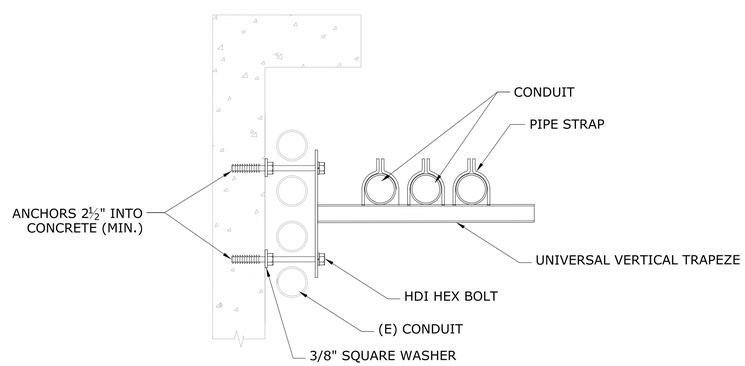

7 FCI-671 **UNDER PLATFORM VERTICAL TRAPEZE MOUNT**
NOT TO SCALE SEE NOTE 1

NOTES:

1. CONDUIT SYSTEMS SHALL BE ATTACHED TO THE EXISTING STRUCTURES CONFORMING TO THE FOLLOWING:
   - A. FIELD DRILL HOLES IN CONCRETE STRUCTURES. HOLE DIAMETER & ANCHOR DEPTH FOR THE ANCHORAGE TO BE IN ACCORDANCE WITH THE MANUFACTURER'S RECOMMENDATIONS. SELECT THE LARGEST DIAMETER ANCHOR THAT WILL FIT IN THE MOUNT BEING INSTALLED.
   - B. ANCHORS - SYSTEM APPROVED BY CONN. D.O.T. WITH THREADED RODS, ANCHOR BOLTS, NUTS, AND WASHERS SHALL BE STAINLESS STEEL.
   - C. SPACE STRAPS AT 60" MAXIMUM.
   - D. ONE HOLE STRAPS CAN ONLY BE USED WITH BACK STRAP.
2. STRAPS SHALL BE SECURED TO ANCHORS WITH LOCKWASHERS, FLAT WASHERS, AND NUTS.
3. ONE HOLE CONDUIT STRAP STUD LOCATION SHALL BE BELOW THE CONDUIT UNLESS FIELD CONDITIONS DICTATE OTHERWISE.
4. ANCHORS SHALL CONFORM TO THE REQUIREMENTS OF ASTM A193(M), CLASS 2, GRADE B8M (TYPE 316).
5. NUTS SHALL BE NYLON INSERT LOCK NUTS AND CONFORM TO ASTM A194(M), CLASS 2, GRADE 8M, STRAIN HARDENED (TYPE 316).
6. WASHERS SHALL CONFORM TO ASTM A276(M), TYPE 316, ANNEALED.
7. MATERIALS FOR USE WITH RGS CONDUIT SYSTEMS:
   - CHANNEL: STAINLESS STEEL
   - PIPE STRAPS: STAINLESS STEEL
   - ONE HOLE STRAP: HOT-DIPPED GALVANIZED MALLEABLE IRON

   MATERIALS FOR USE WITH PVC COATED RGS CONDUIT SYSTEMS:
   - CHANNEL: STAINLESS STEEL OR PVC COATED
   - PIPE STRAPS: STAINLESS STEEL* OR PVC COATED
   - ONE HOLE STRAP: PVC COATED MALLEABLE IRON

   *STAINLESS STEEL PIPE STRAPS MAY ONLY BE USED WITH STAINLESS STEEL CHANNEL AND SHALL NOT BE USED WITH PVC COATED CHANNEL.

   ALL MOUNTING HARDWARE (NUTS, BOLTS, WASHERS, ETC.) SHALL BE STAINLESS STEEL.

   ALL ITEMS SHALL BE COMPATIBLE TO FORM A COMPLETE CONDUIT SUPPORT SYSTEM IN ACCORDANCE WITH MANUFACTURER INSTRUCTIONS.
8. ALL THREADED ROD CONNECTIONS TO BE INSULATED.
9. LONGITUDINAL AND TRANSVERSE BRACING SHALL BE ADDDED TO TRAPEZE CONDUIT SUPPORTS ALONG THE RUN AS NECESSARY.

TYPES OF WALL CONSTRUCTION	TYPES OF ANCHOR
CONCRETE WALL	STUD ANCHOR (WEDGE ANCHOR)
HOLLOW/CINDER BLOCK WALL	HEAVY DUTY DOUBLE EXPANSION BOLT ANCHORS

ANY OTHER TYPES OF WALL CONSTRUCTION WILL REQUIRE ENGINEER'S APPROVAL. SUBMIT ALL PRODUCTS TO THE ENGINEER FOR APPROVAL.

REV.	DATE	REVISION DESCRIPTION	SHEET NO.

THE INFORMATION, INCLUDING ESTIMATED QUANTITIES OF WORK, SHOWN ON THESE SHEETS IS BASED ON LIMITED INVESTIGATIONS BY THE STATE AND IS IN NO WAY WARRANTED TO INDICATE THE CONDITIONS OF ACTUAL QUANTITIES OF WORK WHICH WILL BE REQUIRED.

Plotted Date: 6/11/2019

DESIGNER/DRAFTER: JY/RL
CHECKED BY: TC
SCALE AS NOTED

STATE OF CONNECTICUT
DEPARTMENT OF TRANSPORTATION

Filename: ...\FCI-671_CNS_Sheet_0300-0202.dgn

SIGNATURE/BLOCK:
STV Incorporated
185 Plains Road
Suite 208E
Milford, CT 06461

PROJECT TITLE:
NETWORK INFRASTRUCTURE UPGRADE FOR SECURITY NEW HAVEN LINE PHASE 3

TOWN: **STAMFORD TO WESTPORT**

DRAWING TITLE: **CONDUIT DETAILS SHEET 2 OF 2**

PROJECT NO. 0300-0202
DRAWING NO. FCI-671
SHEET NO. 04.32

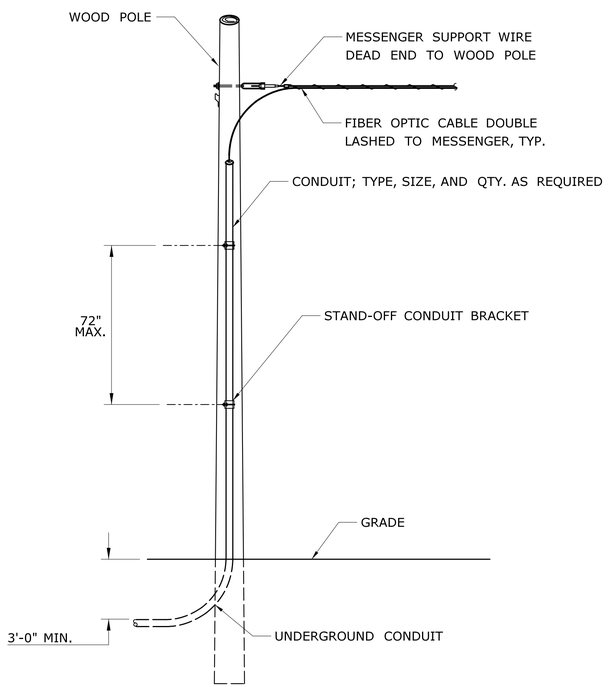

1 FCI-672 **WOOD POLE RISER DETAIL**
NOT TO SCALE

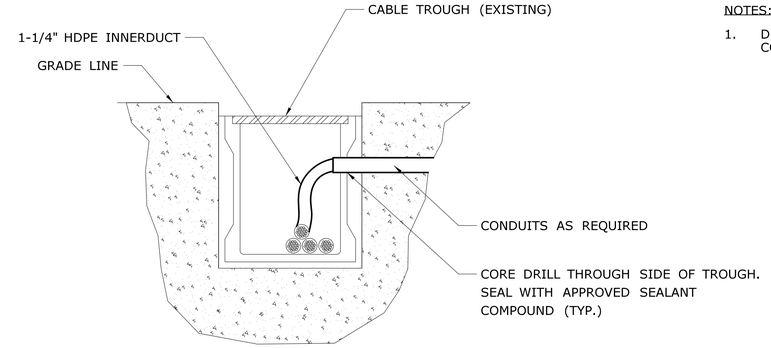

2 FCI-672 **CONDUIT-TROUGH PENETRATION**
NOT TO SCALE

NOTES:

1. DETAILS ARE TYPICAL. COORDINATE FINAL DETAILS WITH SITE CONDITIONS.

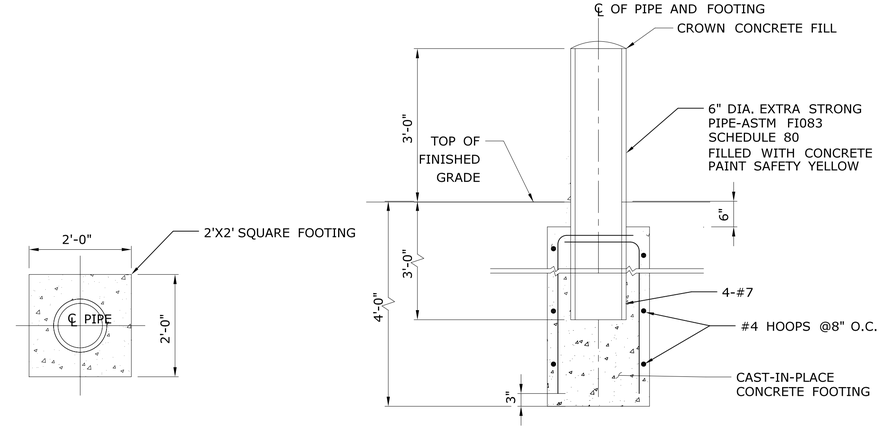

3 FCI-672 **PIPE BOLLARD DETAIL**
NOT TO SCALE

REV.	DATE	REVISION DESCRIPTION	SHEET NO.

THE INFORMATION, INCLUDING ESTIMATED QUANTITIES OF WORK, SHOWN ON THESE SHEETS IS BASED ON LIMITED INVESTIGATIONS BY THE STATE AND IS IN NO WAY WARRANTED TO INDICATE THE CONDITIONS OF ACTUAL QUANTITIES OF WORK WHICH WILL BE REQUIRED.

Plotted Date: 6/11/2019

DESIGNER/DRAFTER: JY
CHECKED BY: TC
SCALE AS NOTED

STATE OF CONNECTICUT
DEPARTMENT OF TRANSPORTATION

Filename: ...\FCI-672_CNS_Sheet_0300-0202.dgn

SIGNATURE/BLOCK:
STV Incorporated
185 Plains Road
Suite 208E
Milford, CT 06461

PROJECT TITLE:
NETWORK INFRASTRUCTURE UPGRADE FOR SECURITY NEW HAVEN LINE PHASE 3

TOWN: **STAMFORD TO WESTPORT**

DRAWING TITLE: **MISC. SITE DETAILS**

PROJECT NO. 0300-0202
DRAWING NO. FCI-672
SHEET NO. 04.33

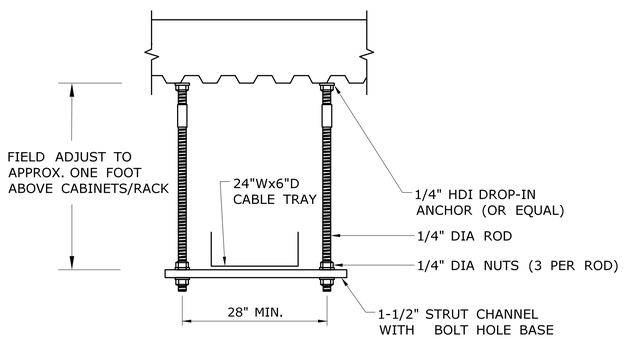

1 FCI-673 **CABLE TRAY INSTALLATION DETAIL**
NOT TO SCALE

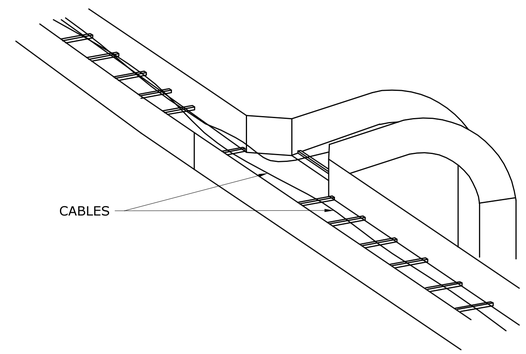

2 FCI-673 **CABLES INSTALLED AT VERTICAL TRANSITION**
NOT TO SCALE

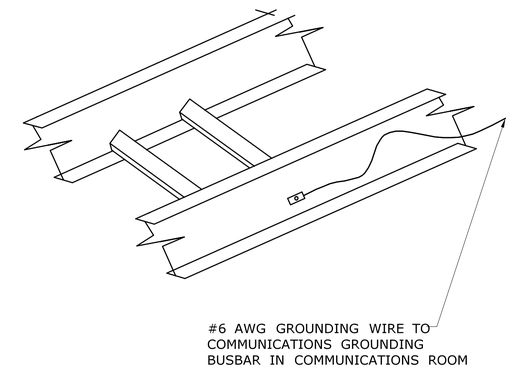

3 FCI-673 **CABLE TRAY GROUNDING**
NOT TO SCALE

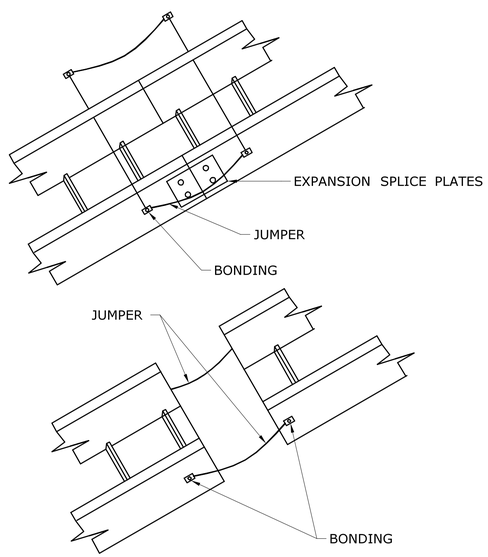

4 FCI-673 **CABLE TRAY BONDING**
NOT TO SCALE

REV.	DATE	REVISION DESCRIPTION	SHEET NO.

THE INFORMATION, INCLUDING ESTIMATED QUANTITIES OF WORK, SHOWN ON THESE SHEETS IS BASED ON LIMITED INVESTIGATIONS BY THE STATE AND IS IN NO WAY WARRANTED TO INDICATE THE CONDITIONS OF ACTUAL QUANTITIES OF WORK WHICH WILL BE REQUIRED.

Plotted Date: 6/11/2019

DESIGNER/DRAFTER: JY
CHECKED BY: TC
SCALE AS NOTED

STATE OF CONNECTICUT
DEPARTMENT OF TRANSPORTATION

Filename: ..\FCI-673_CNS_Sheet_0300-0202.dgn

SIGNATURE/BLOCK:
STV Incorporated
185 Plains Road
Suite 208E
Milford, CT 06461

PROJECT TITLE:
NETWORK INFRASTRUCTURE UPGRADE FOR SECURITY NEW HAVEN LINE PHASE 3

TOWN: **STAMFORD TO WESTPORT**

DRAWING TITLE: **CABLE TRAY DETAILS**

PROJECT NO. **0300-0202**
DRAWING NO. **FCI-673**
SHEET NO. **04.34**