SUBSET 06 - STRUCTURES
INDEX OF DRAWINGS

DRAWING NUMBER	DRAWING TITLE	DRAWING NUMBER	DRAWING TITLE
STR-001	STRUCTURAL GENERAL NOTES		
STR-002	STRUCTURAL ABBREVIATIONS & LEGEND		
STR-003	NODE HOUSE - SITE PLAN		
STR-004	NODE HOUSE - FLOOR PLAN & ELEVATIONS		
STR-005	SOIL BORING LOG		
STR-006	NODE HOUSE - FOUNDATION PLAN		
STR-007	NODE HOUSE - PILE SECTION & DETAILS		
STR-008	NODE HOUSE - SLAB PLAN		
STR-009	NODE HOUSE - TYPICAL SECTIONS & DETAILS - 1		
STR-010	NODE HOUSE - TYPICAL SECTIONS & DETAILS - 2		
STR-011	NODE HOUSE - TYPICAL SECTIONS & DETAILS - 3		
STR-012	NODE HOUSE - MISCELLANEOUS DETAILS		
ELE-001	NODE HOUSE - ELECTRICAL LEGEND		
ELE-002	NODE HOUSE - ELECTRICAL POWER RISER PLAN		
ELE-003	NODE HOUSE - ELECTRICAL POWER PLAN		
ELE-004	NODE HOUSE - ELECTRICAL LIGHTING POWER PLAN		
ELE-005	NODE HOUSE - ELECTRICAL SCHEDULE & DETAILS		
ELE-006	NODE HOUSE - ELECTRICAL EMER. GENERATOR PLAN		
MEC-001	NODE HOUSE - MECHANICAL LEGEND		
MEC-002	NODE HOUSE - MECHANICAL HVAC PLAN		
FPR-001	NODE HOUSE - FIRE ALARM/FIRE PROTECTION PLAN		

DESIGNED BY:
GARG CONSULTING SERVICES, INC.
2096 A SILAS DEANE HIGHWAY
ROCKY HILL, CT 06067

STATE OF CONNECTICUT
EUGENE Y. CHUANG
NO. 23258
LICENSED
PROFESSIONAL ENGINEER

Digitally signed by Eugene Chuang
DN: c=US, st=Connecticut, l=Rocky Hill, o=Garg Consulting Services Inc, cn=Eugene Chuang, email=jda@gargcinc.com
Date: 2019.07.02 17:25:47 -04'00'

REV.	DATE	REVISION DESCRIPTION	SHEET NO.

THE INFORMATION, INCLUDING ESTIMATED QUANTITIES OF WORK, SHOWN ON THESE SHEETS IS BASED ON LIMITED INVESTIGATIONS BY THE STATE AND IS IN NO WAY WARRANTED TO INDICATE THE CONDITIONS OF ACTUAL QUANTITIES OF WORK WHICH WILL BE REQUIRED.

Plotted Date: 6/24/2019

DESIGNER/DRAFTER: ASD
CHECKED BY: PDG
NOT TO SCALE

STATE OF CONNECTICUT
DEPARTMENT OF TRANSPORTATION

Filename: ...\STI-001_CNS_SHEET_0300-0202.dgn

SIGNATURE/BLOCK:
GARG CONSULTING SERVICES, INC.
2096A Silas Deane Highway
Rocky Hill, CT 06067
Tel: (860) 563-0582

APPROVED BY: E. CHUANG
DATE: 06/26/2019

PROJECT TITLE:
NETWORK INFRASTRUCTURE UPGRADE FOR SECURITY
NEW HAVEN LINE
PHASE 3

TOWN: STAMFORD TO WESTPORT

DRAWING TITLE: STRUCTURES INDEX OF DRAWINGS

PROJECT NO. 0300-0202
DRAWING NO. IN-006
SHEET NO. 06.01

GENERAL STRUCTURAL NOTES:

1. DESIGN CODES AND CRITERIA:
   THE MINIMUM STRUCTURAL DESIGN SHALL BE IN ACCORDANCE WITH THE CONNECTICUT BUILDING CODE, IBC 2015 AND ASCE 7-10.
2. IN ADDITION TO THE BUILDING DEAD LOADS, THE STRUCTURES SHALL BE DESIGNED FOR THE FOLLOWING LOADS:

   LIVE LOADS

ELEVATED PLATFORM	100 PSF
NODE HOUSE	300 PSF
GENERATOR SUPPORT SLAB	100 PSF

   SNOW LOADS

GROUND SNOW LOAD, Pg	30 PSF
SNOW EXPOSURE FACTOR, Ce	1.1
THERMAL COEFFICIENT FACTOR, Ct	1.0
SNOW IMPORTANCE FACTOR, Is	1.0

   WIND LOADS

BASIC WIND SPEED, V	110 MPH
WIND IMPORTANCE FACTOR, Iw	1.15
WIND EXPOSURE CATEGORY	C

   SEISMIC LOAD (PER 2005 CONN. BUILDING CODE AND SUPPLEMENT 2016)

SEISMIC DESIGN CATEGORY	D
SHORT PERIOD SPECTRAL ACCELARATION, Ss	0.243
1-SECOND PERIOD SPECTRAL ACCELARATION, S1	0.062
IMPORTANCE FACTOR, I	1.5
SITE CLASS	E
BASIC SEISMIC FORCE RESISTING SYSTEM:	ASCE 7-10
LONGITUDINAL:	ORDINARY CONCENTRICALLY BRACED FRAME
TRANSVERSE:	ORDINARY CONCENTRICALLY BRACED FRAME

3. LIVE LOAD REDUCTION SHALL BE IN ACCORDANCE WITH ASCE 7-10.
4. FUTURE EXPANSION: NO FUTURE EXPANSION.

CAST IN PLACE CONCRETE:

1. PROPORTIONING OF REINFORCED CONCRETE MEMBERS AND THEIR STEEL REINFORCEMENT IS BASED ON ULTIMATE STRENGTH DESIGN IN ACCORDANCE WITH BUILDING CODE REQUIREMENTS FOR REINFORCED CONCRETE (ACI 318-14).
2. MINIMUM 28 DAY COMPRESSIVE STRENGTHS f'c (28 DAYS)

SLABS/BEAMS	4,400 PSI (CLASS 'F' CONCRETE)
SLAB-ON-GRADE	4,400 PSI (CLASS 'F' CONCRETE)

   ALL CONCRETE SHALL BE CLASSIFIED AS NORMAL WEIGHT, EXCEPT AS NOTED, WITH A UNIT WEIGHT OF 145 PCF.
3. ALL FORMWORK SHALL REMAIN IN PLACE UNTIL CONCRETE HAS ATTAINED AT LEAST 75% OF ITS 28-DAY COMPRESSIVE STRENGTH (SEE SPECIFICATIONS).
4. ALL CONSTRUCTION AND CONTROL JOINTS MUST BE SHOWN ON SHOP DRAWINGS AND APPROVED BY THE ENGINEER.
5. CONSTRUCTION JOINTS NOT SHOWN ON THE DRAWINGS SHALL BE LOCATED SO AS TO LEAST IMPAIR THE STRENGTH OF THE STRUCTURE AND SHOULD GENERALLY BE LOCATED AT POINTS OF MINIMUM SHEAR.
6. ALL EXPOSED EDGES SHALL BE CHAMFERED 3/4" UNLESS NOTED OTHERWISE.
7. ALL KEYS SHALL BE 2" x 4" WITH SQUARED SIDES, UNLESS NOTED OTHERWISE.
8. NO HORIZONTAL CONSTRUCTION JOINTS SHALL BE PERMITTED IN BEAMS, UNLESS SHOWN SPECIFICALLY ON DRAWINGS. FOR VERTICAL CONSTRUCTION JOINTS, REFER TO ACI 318-14.
9. ALL REINFORCEMENT WILL BE CONTINUOUS THROUGH CONSTRUCTION JOINTS. REFER TO TYPICAL DETAILS ON DRAWING NOS. STR-009, STR-010 AND STR-011.
10. CAST SLABS, WALLS AND BEAMS MONOLITHICALLY, UNLESS INDICATED OTHERWISE.
11. NOT ALL OPENINGS THROUGH CONCRETE SLABS ARE SHOWN ON THE STRUCTURAL DRAWINGS. OPENINGS INDICATED OR ANY ADDITIONAL OPENINGS OR INSERTS REQUIRED MUST BE VERIFIED WITH RESPECTIVE TRADES BEFORE POURING OF CONCRETE. NO CONCRETE SHALL BE CAST PRIOR TO DESIGNER'S REVIEW AND APPROVAL OF THE COORDINATED SUBMITTAL TO INCLUDE REINFORCEMENT, SLAB OPENINGS AND EMBEDDED ITEMS.
12. USE NON-SHRINK, NON-METALLIC GROUT HAVING A MINIMUM COMPRESSIVE STRENGTH OF 5,000 PSI, WHERE INDICATED ON THE PLANS AND IN THE SPECIFICATIONS.
13. PROVIDE SEALANTS IN JOINTS EXPOSED TO VIEW, CONSTRUCTION JOINTS, CONTROL JOINTS AND SHEAR KEYS.
14. ALL CONCRETE SHALL BE CONTROLLED CONCRETE, MIXED AND PLACED UNDER THE SUPERVISION OF AN APPROVED CONCRETE TESTING AGENCY.
15. ALL CONCRETE EXPOSED TO WEATHER SHALL CONTAIN AIR ENTRAINMENT ADMIXTURE.
16. GROUT FOR MICROPILES SHALL HAVE A 28 DAY COMPRESSIVE STRENGTH (f'c) OF 5,000 PSI.

CAST IN PLACE CONCRETE REINFORCING:

1. SHOP DRAWINGS AND SCHEDULES OF REINFORCING STEEL SHALL BE PREPARED BY THE CONTRACTOR AND SUBMITTED TO THE ENGINEER FOR APPROVAL PRIOR TO COMMENCEMENT OF THAT PORTION OF THE WORK. ALL ACCESSORIES MUST BE SHOWN ON THE SHOP DRAWINGS.
2. REINFORCING BARS IN BEAMS AND SLABS SHALL CONFORM TO ASTM A615 OR A706 GRADE 60 AND SHALL BE EPOXY COATED.
3. REINFORCING BARS IN DRILLED SHAFT SHALL CONFORM TO ASTM A615 GRADE 60.
4. THE FOLLOWING MINIMUM CLEAR COVER SHALL BE PROVIDED UNLESS NOTED OTHERWISE ON THE DRAWINGS:

CONCRETE PLACED AGAINST GROUND - ALL BAR SIZES	3"
CONCRETE EXPOSED TO WEATHER OR IN CONTACT WITH GROUND	
#6 OR LARGER	2"
#5 OR SMALLER	1-1/2"

5. UNLESS NOTED OTHERWISE, BARS SHALL BE CONTINUOUS AND SHALL RUN CONTINUOUSLY AROUND CORNERS. BARS SHALL HAVE STANDARD HOOKS AT DISCONTINUOUS ENDS.
6. SPLICES SHALL GENERALLY OCCUR AT MID-SPAN FOR TOP AND MIDDLE BARS AND AT THE SUPPORT FOR BOTTOM BARS AND SHALL BE STAGGERED. PROVIDE CLASS B SPLICES FOR ALL CONTINUOUS REINFORCEMENT, UNLESS NOTED OTHERWISE.
7. BARS SHALL NOT BE CUT OR OMITTED FOR SLEEVE OR DUCT OPENINGS IN FLOORS. BARS MAY BE MOVED LATERALLY WITHOUT CHANGING THE DISTANCE FROM THE FACE OF CONCRETE. BEND NO BARS IN FIELD WITHOUT APPROVAL OF THE ENGINEER.
8. ALL REINFORCING SHALL BE DETAILED IN ACCORDANCE WITH AC1 315 MANUAL OF STANDARD PRACTICE FOR DETAILING REINFORCED CONCRETE STRUCTURES. PROVIDE BAR SUPPORTS, SPACERS AND ACCESSORIES RECOMMENDED IN THE ACI DETAILING MANUAL, PUBLICATION SP-66. ALL REINFORCEMENT DETAILING, LAP SPLICES AND EMBEDMENTS SHALL CONFORM TO THIS MANUAL. ALL ACCESSORIES, SUCH AS SLAB BOLSTERS, BEAM AND SLAB CHAIRS IN CONTACT WITH EXPOSED SURFACES SHALL BE PLASTIC COATED.
9. SET AND TIE ALL REINFORCEMENT BEFORE PLACING CONCRETE. SETTING DOWELS AND REINFORCEMENT INTO WET CONCRETE IS PROHIBITED.
10. MINIMUM ANCHORAGE, SPLICE REQUIREMENTS FOR REINFORCING BARS AND TEMPERATURE REINFORCEMENT IN ALL CONCRETE SLABS SHALL CONFORM TO REQUIREMENTS OF ACI 318, UNLESS NOTED OTHERWISE ON THE DRAWINGS.
11. NO CONCRETE SHALL BE CAST BEFORE REVIEW AND APPROVAL OF THE REINFORCING AND EMBEDDED ITEMS HAVE BEEN OBTAINED FROM THE ENGINEER.
12. ANY ADDITIONAL DRILLING OR CORING SHALL NOT DAMAGE THE REINFORCING BARS.
13. SET ANCHOR BOLTS AND EMBEDDED PLATES REQUIRED FOR CONNECTION WORK BY OTHERS.

FOUNDATION:

1. FOUNDATION DESIGN IS BASED UPON SOIL EXPLORATION AND REPORT BY WHITESTONE ASSOCIATES, DATED JUNE 2018, WITH ADDENDUM DATED JANUARY 2019.
2. MICROPILES SHALL CONFORM TO THE PROVISIONS IN FORM 817 AND SPECIAL PROVISIONS. MAXIMUM PERMISSIBLE LOAD ON 6" DIA MICROPILE = 85 KIPS.
3. ALL BACKFILL UNDER STRUCTURAL SLAB, MATS AND OTHER FOUNDATION ELEMENTS SHALL BE COMPACTED IN SPECIFIED LIFTS TO 95 PERCENT OF MAXIMUM DRY DENSITY, UNLESS NOTED OTHERWISE OR INDICATED. FOUNDATION ELEMENTS SHALL REST ON SUITABLE UNDISTURBED OR COMPACTED STRUCTURAL FILL. REFER TO SPECIFICATIONS FOR FILL REQUIREMENTS.
4. PROVIDE SHEETING, BRACING AND UNDERPINNING TO PROTECT ADJACENT UTILITY STRUCTURES, AS REQUIRED.
5. OPEN EXCAVATIONS AROUND BUILDING PERIMETER MUST REMAIN DRY. REMOVE WATER FROM OPEN EXCAVATIONS PRIOR TO BACKFILLING.
6. SHORING AND BRACING FOR LATERAL SUPPORT OF EXCAVATION SHALL REMAIN IN PLACE UNTIL ALL PERMANENT STRUCTURAL SYSTEMS ARE COMPLETE AND APPROVED BY THE ENGINEER.
7. CONTRACTOR SHALL PROVIDE TEMPORARY BRACING FOR ALL FOUNDATION ELEMENTS DURING BACKFILLING AND COMPACTION.
8. ALL REQUIRED INSERTS, SLEEVES, CONDUITS, EMBEDMENTS AND PENETRATIONS MUST BE VERIFIED WITH RESPECTIVE TRADES BEFORE CASTING CONCRETE.
9. COORDINATE UNDERDRAIN REQUIREMENTS WITH MECHANICAL DRAWINGS.
10. NO FOUNDATION ELEMENT SHALL BE PLACED ON FROZEN SOIL OR IN STANDING WATER.
11. OLD FOUNDATIONS OR OTHER OBSTRUCTIONS MAY BE ENCOUNTERED DURING EXCAVATION. SUCH FOUNDATIONS AND OBSTRUCTIONS SHALL BE REMOVED TO A MINIMUM OF 2 FEET BELOW THE BOTTOM OF NEW FOUNDATION OR AS DIRECTED BY THE ENGINEER.
12. THE OWNER AND ENGINEER ASSUME NO RESPONSIBILITY FOR THE VALIDITY OF THE SUBSURFACE CONDITIONS DESCRIBED ON THE DRAWINGS, SPECIFICATIONS, BORING LOGS OR TEST PITS. THE DATA IS INCLUDED ONLY TO ASSIST THE CONTRACTOR DURING THE BIDDING AND SUBSEQUENT CONSTRUCTION AND REPRESENT CONDITIONS ONLY OF THE SPECIFIED LOCATIONS AT THE PARTICULAR TIME THEY WERE MADE.

GENERAL CONSTRUCTION NOTES:

1. THE CONTRACTOR SHALL VERIFY ALL DIMENSIONS AND CONDITIONS AT THE SITE AND REPORT ANY DISCREPANCIES TO THE ENGINEER FOR CLARIFICATION BEFORE PROCEEDING WITH THE AFFECTED PART OF WORK.
2. SHORE, SHEET AND BRACE EXCAVATION AS REQUIRED TO ASSURE THE COMPLETE SAFETY AGAINST COLLAPSE OF EARTH AND DAMAGE TO ADJACENT PROPERTY INCLUDING BUT NOT LIMITED TO EXISTING STREETS, BUILDINGS AND UTILITY LINES.
3. THE CONTRACTOR SHALL BE COMPLETELY RESPONSIBLE FOR THE SAFETY OF ADJACENT STRUCTURES, PROPERTY AND THE PUBLIC. IN AREAS OF PUBLIC ACCESS, THE PUBLIC WAY SHALL BE PROTECTED FROM CONSTRUCTION AND DEMOLITION WORK AT ALL TIMES.
4. COORDINATE THE STRUCTURAL INFORMATION SHOWN ON THESE DRAWINGS WITH OTHER INTERFACING TRADES (CIVIL, UTILITIES, COMMUNICATIONS ETC.) PRIOR TO SUBMITTAL OF SHOP DRAWINGS AND CONSTRUCTION.
5. WORK NOT INDICATED ON A PART OF THE DRAWINGS, BUT REASONABLY IMPLIED TO BE SIMILAR TO THAT SHOWN AT CORRESPONDING LOCATIONS, SHALL BE INCLUDED. DETAILS SHOWN AS TYPICAL ARE APPLICABLE TO ALL SIMILAR CONDITIONS.
6. ALL CONSTRUCTION SHALL BE IN CONFORMANCE WITH APPROVED SHOP DRAWINGS.
7. DO NOT SCALE CONTRACT DRAWINGS FOR THE PURPOSE OF ESTABLISHING DIMENSIONS.
8. STRUCTURAL DRAWINGS SHALL BE USED IN CONJUNCTION WITH SHOP DRAWINGS, PROJECT SPECIFICATIONS, CIVIL, UTILITY, COMMUNICATIONS AND OTHER DRAWINGS. CONSULT THESE DRAWINGS FOR LOCATIONS AND DIMENSIONS OF OPENINGS, CHASES, INSERTS, REGLETS, SLEEVES, DEPRESSIONS AND OTHER DETAILS NOT SHOWN ON THE STRUCTURAL DRAWINGS.

ABBREVIATIONS:

BFE, B.F.E.	=	BOTTOM OF FOOTING ELEVATION
BOT	=	BOTTOM
BRG	=	BEARING
CAT	=	CATENARY
CIP	=	CAST-IN-PLACE CONCRETE
℄ , CL	=	CENTER LINE
CD	=	COLUMN DOWN
CLR	=	CLEAR
COL	=	COLUMN
CONN	=	CONNECTION
CONT	=	CONTINUOUS
DIA	=	DIAMETER
DWG	=	DRAWING
EF	=	EACH FACE
EJ	=	EXPANSION JOINT
EL	=	ELEVATION
EOS	=	EDGE OF SLAB
EQ	=	EQUAL
EQUIP	=	EQUIPMENT
ES	=	EACH SIDE
FB	=	FOUNDATION BEAM
F'c	=	CONCRETE 28 DAY COMPRESSIVE STRENGTH
FF	=	FRONT FACE
FIN	=	FINISH
FNDN	=	FOUNDATION
FRP	=	FIBERGLASS REINFORCED PLASTIC
GA	=	GAUGE
GALV	=	GALVANIZED
KSF	=	KIPS PER SQUARE FOOT
KSI	=	KIPS PER SQUARE INCH
LG	=	LONGITUDINAL
LLG	=	LONG LEG VERTICAL
MAX	=	MAXIMUM
MECH	=	MECHANICAL
MEP	=	MECHANICAL/ELECTRICAL/PLUMBING
MIN	=	MINIMUM
NS	=	NON-SHRINK
NTS	=	NOT TO SCALE
OC	=	ON CENTER
OD	=	OUTER DIAMETER
℞ , PL	=	PLATE
PSF	=	POUNDS PER SQUARE FOOT
PSI	=	POUNDS PER SQUARE INCH
REINF	=	REINFORCEMENT
RF	=	REAR FACE
RMC	=	RIGID METAL CONDUIT
SCH	=	SCHEDULE
SIM	=	SIMILAR
SOG	=	SLAB ON GRADE
SPS	=	SPACES
SS	=	STAINLESS STEEL
STD	=	STANDARD
T&B	=	TOP AND BOTTOM
T/	=	TOP OF
TOC	=	TOP OF CONCRETE
TOFF	=	TOP OF FINISHED FLOOR
TOS, T.O.S.	=	TOP OF STEEL
TYP	=	TYPICAL
UNO, U.N.O.	=	UNLESS NOTED OTHERWISE
WP, W.P.	=	WORKING POINT
WS	=	WATER STOP
⟷	=	INDICATES DIRECTION OF SPAN

LEGEND:

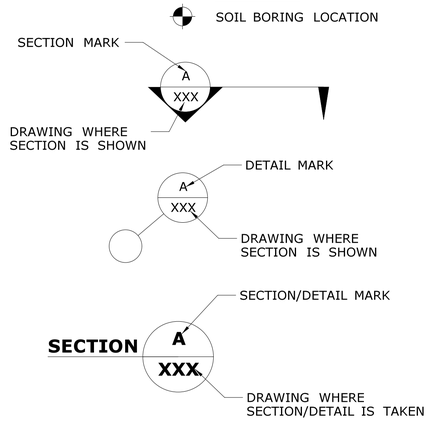

REV.	DATE	REVISION DESCRIPTION	SHEET NO.

THE INFORMATION, INCLUDING ESTIMATED QUANTITIES OF WORK, SHOWN ON THESE SHEETS IS BASED ON LIMITED INVESTIGATIONS BY THE STATE AND IS IN NO WAY WARRANTED TO INDICATE THE CONDITIONS OF ACTUAL QUANTITIES OF WORK WHICH WILL BE REQUIRED.

Plotted Date: 6/24/2019

DESIGNER/DRAFTER: ASD

CHECKED BY: PDG

NOT TO SCALE

STATE OF CONNECTICUT
DEPARTMENT OF TRANSPORTATION

Filename: ...\STR-002_CNS_SHEET_0300-0202.dgn

SIGNATURE/ BLOCK:
GARG CONSULTING SERVICES, INC.
2096A Silas Deane Highway
Rocky Hill, CT 06067
Tel: (860) 563-0582

APPROVED BY: E. CHUANG
DATE: 06/26/2019

STATE OF CONNECTICUT
EUGENE Y. CHUANG
NO. 23258
PROFESSIONAL ENGINEER

PROJECT TITLE:
NETWORK INFRASTRUCTURE UPGRADE FOR SECURITY
NEW HAVEN LINE
PHASE 3

TOWN:
STAMFORD TO WESTPORT

DRAWING TITLE:
STRUCTURAL ABBREVIATIONS & LEGEND

PROJECT NO. 0300-0202

DRAWING NO. STR-002

SHEET NO. 06.03

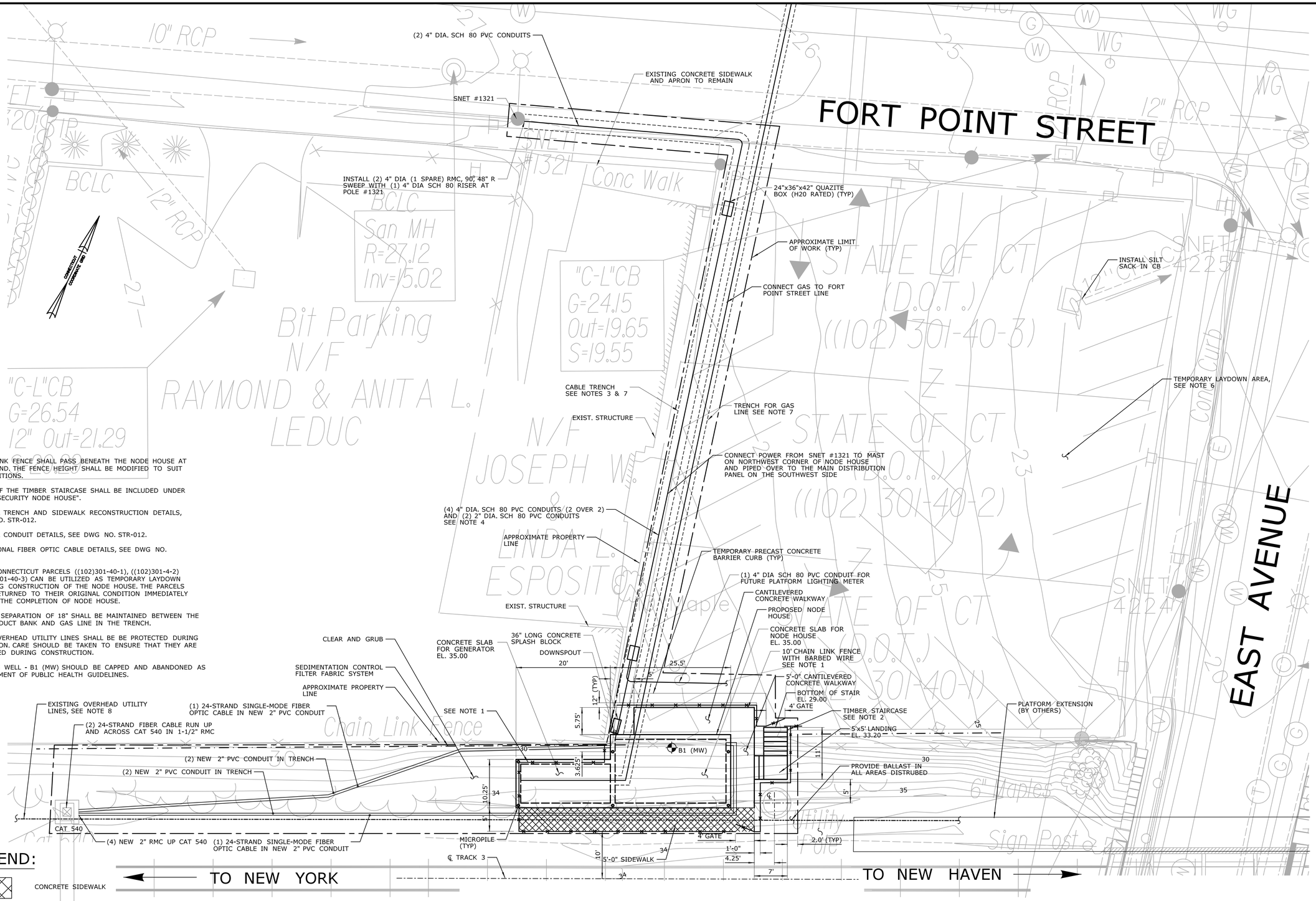

NOTES:

1. 10' CHAIN LINK FENCE SHALL PASS BENEATH THE NODE HOUSE AT THE WEST END. THE FENCE HEIGHT SHALL BE MODIFIED TO SUIT FIELD CONDITIONS.
2. THE COST OF THE TIMBER STAIRCASE SHALL BE INCLUDED UNDER THE ITEM "SECURITY NODE HOUSE".
3. FOR TYPICAL TRENCH AND SIDEWALK RECONSTRUCTION DETAILS, SEE DWG NO. STR-012.
4. FOR TYPICAL CONDUIT DETAILS, SEE DWG NO. STR-012.
5. FOR ADDITIONAL FIBER OPTIC CABLE DETAILS, SEE DWG NO. FCI-605.
6. STATE OF CONNECTICUT PARCELS ((102)301-40-1), ((102)301-4-2) AND ((102)301-40-3) CAN BE UTILIZED AS TEMPORARY LAYDOWN AREA DURING CONSTRUCTION OF THE NODE HOUSE. THE PARCELS SHALL BE RETURNED TO THEIR ORIGINAL CONDITION IMMEDIATELY FOLLOWING THE COMPLETION OF NODE HOUSE.
7. A MINIMUM SEPARATION OF 18" SHALL BE MAINTAINED BETWEEN THE ELECTRICAL DUCT BANK AND GAS LINE IN THE TRENCH.
8. EXISTING OVERHEAD UTILITY LINES SHALL BE BE PROTECTED DURING CONSTRUCTION. CARE SHOULD BE TAKEN TO ENSURE THAT THEY ARE NOT DAMAGED DURING CONSTRUCTION.
9. MONITORING WELL - B1 (MW) SHOULD BE CAPPED AND ABANDONED AS PER DEPARTMENT OF PUBLIC HEALTH GUIDELINES.

LEGEND:

CONCRETE SIDEWALK

REV.	DATE	REVISION DESCRIPTION	SHEET NO.

THE INFORMATION, INCLUDING ESTIMATED QUANTITIES OF WORK, SHOWN ON THESE SHEETS IS BASED ON LIMITED INVESTIGATIONS BY THE STATE AND IS IN NO WAY WARRANTED TO INDICATE THE CONDITIONS OF ACTUAL QUANTITIES OF WORK WHICH WILL BE REQUIRED.

Plotted Date: 6/25/2019

DESIGNER/DRAFTER: DS

CHECKED BY: ASD

SCALE IN FEET 0 10 20

SCALE 1"=10'

STATE OF CONNECTICUT
DEPARTMENT OF TRANSPORTATION

Filename: ..\STR-003_CNS_SHEET_0300_0202.dgn

SIGNATURE/ BLOCK:
GARG CONSULTING SERVICES, INC.
2096A Silas Deane Highway
Rocky Hill, CT 06067
Tel: (860) 563-0582

APPROVED BY: E. CHUANG DATE: 06/26/2019

STATE OF CONNECTICUT EUGENE Y. CHUANG NO. 23258 LICENSED PROFESSIONAL ENGINEER

PROJECT TITLE:
NETWORK INFRASTRUCTURE UPGRADE FOR SECURITY NEW HAVEN LINE PHASE 3

TOWN: **STAMFORD TO WESTPORT**

DRAWING TITLE: **NODE HOUSE - SITE PLAN**

PROJECT NO. **0300-0202**

DRAWING NO. **STR-003**

SHEET NO. **06.04**

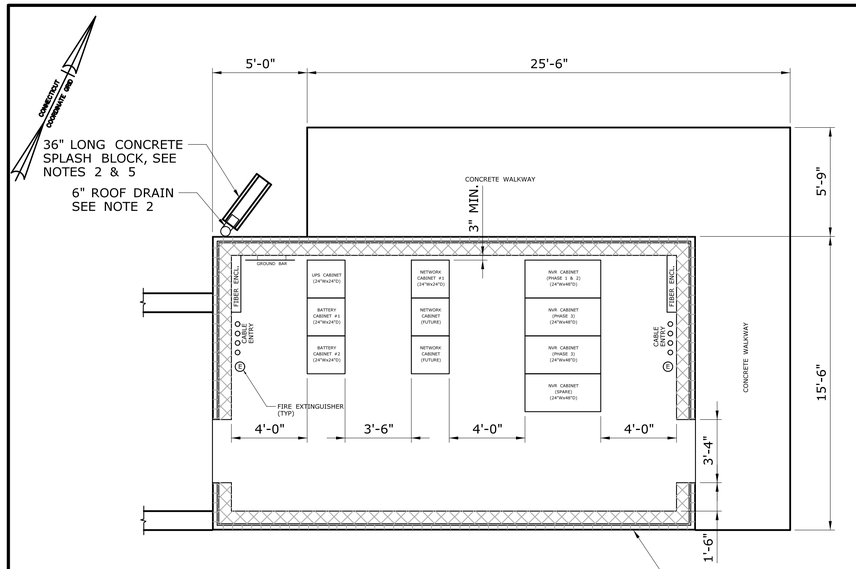

NODE HOUSE - FLOOR PLAN

SCALE: 1/4" = 1'-0"

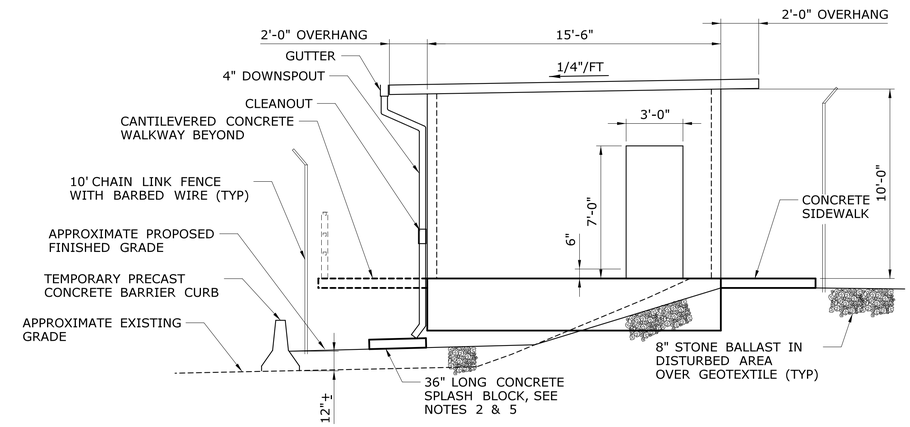

WEST ELEVATION

SCALE: 1/4" = 1'-0"

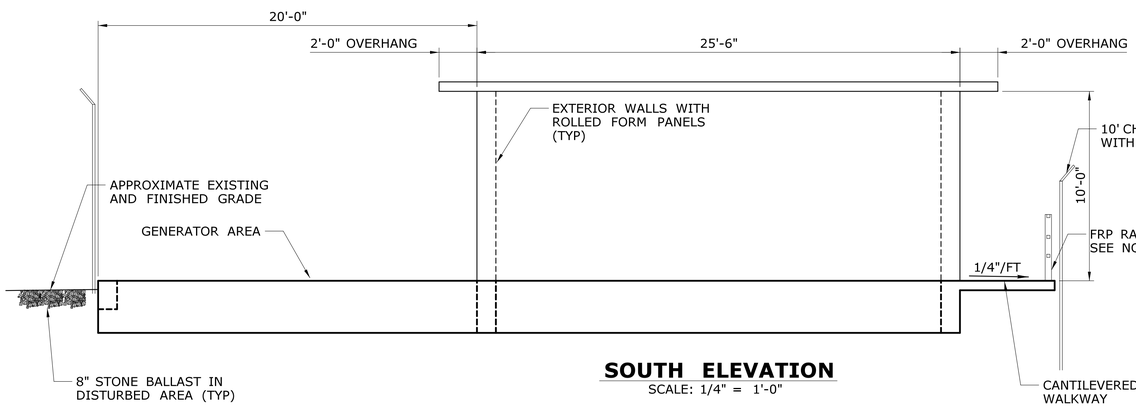

SOUTH ELEVATION

SCALE: 1/4" = 1'-0"

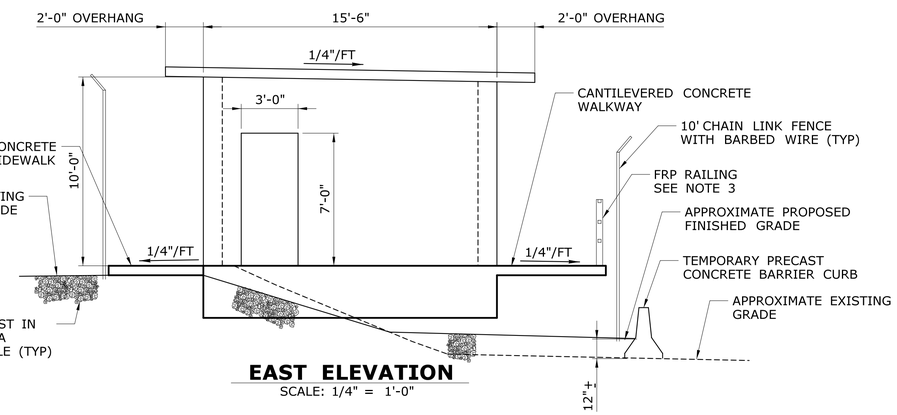

EAST ELEVATION

SCALE: 1/4" = 1'-0"

FINISH SCHEDULE

	WALL								FLOOR & CEILING		
	WEST		NORTH		EAST		SOUTH				
	MATERIAL	FINISH	MATERIAL	FINISH	MATERIAL	FINISH	MATERIAL	FINISH	FLOOR	CEILING	REMARKS
NODE HOUSE	FRP	PF	FRP	PF	FRP	PF	FRP	PF	CONC	FRP	

LEGEND:

CONC	CONCRETE
FRP	LAMINATED FRP
PF	PRE-FINISHED

NOTES:

1. FOR GENERAL NOTES AND ABBREVIATIONS, SEE DWG NOS. STR-001 AND STR-002.
2. THE COST OF FURNISHING AND INSTALLING THE ROOF DRAIN, DOWN SPOUT AND 36" LONG CONCRETE SPLASH BLOCK SHALL BE PAID UNDER THE ITEM "SECURITY NODE HOUSE".
3. THE COST OF FURNISHING AND INSTALLING THE FRP RAILING SYSTEM AND ITS ANCHORAGE TO THE CONCRETE SLAB SHALL BE PAID FOR UNDER THE ITEM "SECURITY NODE HOUSE".
4. FOR FRP RAILING DETAILS, SEE DWG NO. STR-012.
5. CONCRETE SPLASH BLOCK SHALL BE INSTALLED AS REQUIRED TO DIRECT WATER AWAY FROM THE ADJACENT PROPERTY.

REV.	DATE	REVISION DESCRIPTION	SHEET NO.

THE INFORMATION, INCLUDING ESTIMATED QUANTITIES OF WORK, SHOWN ON THESE SHEETS IS BASED ON LIMITED INVESTIGATIONS BY THE STATE AND IS IN NO WAY WARRANTED TO INDICATE THE CONDITIONS OF ACTUAL QUANTITIES OF WORK WHICH WILL BE REQUIRED.

Plotted Date: 6/24/2019

DESIGNER/DRAFTER: ASD
CHECKED BY: PDG
SCALE IN FEET 0 1 2
SCALE 1/4"=1'-0"'

STATE OF CONNECTICUT
DEPARTMENT OF TRANSPORTATION

Filename: ...\STR-004_CNS_SHEET_0300-0202.dgn

SIGNATURE/BLOCK:
GARG CONSULTING SERVICES, INC.
2096A Silas Deane Highway
Rocky Hill, CT 06067
Tel: (860) 563-0582

APPROVED BY: E. CHUANG
DATE: 06/26/2019

STATE OF CONNECTICUT EUGENE Y. CHUANG NO. 23258 LICENSED PROFESSIONAL ENGINEER

PROJECT TITLE:
NETWORK INFRASTRUCTURE UPGRADE FOR SECURITY NEW HAVEN LINE PHASE 3

TOWN: **STAMFORD TO WESTPORT**

DRAWING TITLE: **NODE HOUSE - FLOOR PLAN & ELEVATIONS**

PROJECT NO. 0300-0202
DRAWING NO. STR-004
SHEET NO. 06.05

WHITESTONE ASSOCIATES, INC.

RECORD OF SUBSURFACE EXPLORATION

Boring No.: B-1

Project:	Proposed Security Node House	**WAI Project No.:**	GM1815587.000
Location:	East Avenue, Norwalk, Fairfield, Connecticut	**Client:**	New England Boring Contractors
Surface Elevation:	± NS feet above NAVD88	**Date Started:**	5/21/2018
Termination Depth:	40.6 feet bgs	**Date Completed:**	5/21/2018
Proposed Location:	Building	**Logged By:**	RK
Drill / Test Method:	HSA / SPT	**Contractor:**	RP
		Equipment:	Acker Soil-Scout

	Water Depth (feet bgs)	Elevation (feet NAVD88)		Cave-In Depth (feet bgs)	Elevation (feet NAVD88)
During:	--	--	At Completion:	--	--
At Completion:	--	--	24 Hours:	--	--
24 Hours:	--	--			

SAMPLE INFORMATION Depth (feet)	No	Type	Blows Per 6"	Rec. (in.)	N	DEPTH (feet)	STRATA	DESCRIPTION OF MATERIALS (Classification)	REMARKS
						0.0			
0 - 2	S-1		13 - 7 - 23 - 7	12	30		EXISTING FILL	Brown to Black, Medium Dense, Silty Sand with Gravel, Trace Roots (FILL)	
						3.0			
						5.0			
5 - 6.3	S-2		19 - 29 - 50/4"	8	58		GLACIO-FLUVIAL DEPOSIT	Brown, Very Dense, Poorly Graded Sand with Silt and Gravel (SP-SM)	
						10.0			
10 - 12	S-3		32 - 29 - 33 - 36	14	62			As Above (SP-SM)	
						15.0			
15 - 17	S-4		14 - 30 - 27 - 34	18	57			As Above (SP-SM)	
						20.0			
20 - 22	S-5		37 - 46 - 54 - 44	15	100			As Above (SP-SM)	
						25.0			

NOTES: bgs = below ground surface, msl = mean sea level, NA = Not Applicable, NE = Not Encountered, NS = Not Surveyed, P = Perched

RECORD OF SUBSURFACE EXPLORATION
1815587 Norwalk CT - Log 6/18/2018

WHITESTONE ASSOCIATES, INC.

RECORD OF SUBSURFACE EXPLORATION

Boring No.: B-1

Project:	Proposed Security Node House	**WAI Project No.:**	GM1815587.000
Location:	East Avenue, Norwalk, Fairfield, Connecticut	**Client:**	New England Boring Contractors
Surface Elevation:	± NS feet above NAVD88	**Date Started:**	5/21/2018
Termination Depth:	40.6 feet bgs	**Date Completed:**	5/21/2018
Proposed Location:	Building	**Logged By:**	RK
Drill / Test Method:	HSA / SPT	**Contractor:**	RP
		Equipment:	Acker Soil-Scout

	Water Depth (feet bgs)	Elevation (feet NAVD88)		Cave-In Depth (feet bgs)	Elevation (feet NAVD88)
During:	--	--	At Completion:	--	--
At Completion:	--	--	24 Hours:	--	--
24 Hours:	--	--			

SAMPLE INFORMATION Depth (feet)	No	Type	Blows Per 6"	Rec. (in.)	N	DEPTH (feet)	STRATA	DESCRIPTION OF MATERIALS (Classification)	REMARKS
						25.0			
25 - 27	S-6		19 - 24 - 24 - 27	12	48		GLACIO-FLUVIAL DEPOSIT	Brown/Gray, Dense, Poorly Graded Sand with Silt and Gravel (SP-SM)	
						30.0			
30 - 32	S-7		14 - 29 - 52 - 54	15	81			As Above, Very Dense (SP-SM)	Petroleum Odor
						35.0			
35 - 35.9	S-8		80 - 100/5"	6	-			As Above (SP-SM)	
						40.0			
40 - 40.6	S-9		38 - 50/1"	4	-			As Above (SP-SM)	
								Boring Log B-1 Terminated at a Depth of 40.6 Feet Below Ground Surface. 2" Diameter PVC Monitoring Well Installed	
						45.0			
						50.0			

NOTES: bgs = below ground surface, msl = mean sea level, NA = Not Applicable, NE = Not Encountered, NS = Not Surveyed, P = Perched

RECORD OF SUBSURFACE EXPLORATION
1815587 Norwalk CT - Log 6/18/2018

NOTES:

1. FOR SOIL BORING LOCATION, SEE DWG NO. STR-003.

REV.	DATE	REVISION DESCRIPTION	SHEET NO.

THE INFORMATION, INCLUDING ESTIMATED QUANTITIES OF WORK, SHOWN ON THESE SHEETS IS BASED ON LIMITED INVESTIGATIONS BY THE STATE AND IS IN NO WAY WARRANTED TO INDICATE THE CONDITIONS OF ACTUAL QUANTITIES OF WORK WHICH WILL BE REQUIRED.

Plotted Date: 6/24/2019

DESIGNER/DRAFTER: ASD
CHECKED BY: PDG
NOT TO SCALE

STATE OF CONNECTICUT
DEPARTMENT OF TRANSPORTATION

Filename: ..\STR-005_CNS_SHEET_0300-0202.dgn

SIGNATURE/BLOCK:
GARG CONSULTING SERVICES, INC.
2096A Silas Deane Highway
Rocky Hill, CT 06067
Tel: (860) 563-0582

APPROVED BY: E. CHUANG
DATE: 06/26/2019

STATE OF CONNECTICUT
EUGENE Y. CHUANG
NO. 23258
LICENSED
PROFESSIONAL ENGINEER

PROJECT TITLE:
NETWORK INFRASTRUCTURE UPGRADE FOR SECURITY NEW HAVEN LINE PHASE 3

TOWN: **STAMFORD TO WESTPORT**

DRAWING TITLE: **SOIL BORING LOG**

PROJECT NO. 0300-0202
DRAWING NO. STR-005
SHEET NO. 06.06

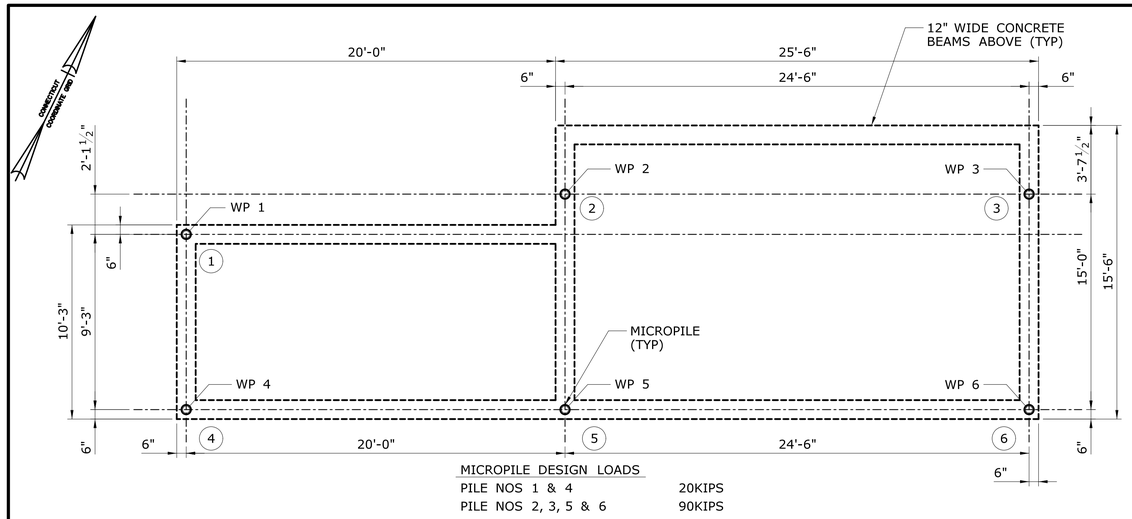

MICROPILE DESIGN LOADS

PILE NOS 1 & 4	20KIPS
PILE NOS 2, 3, 5 & 6	90KIPS

MICROPILE LAYOUT

SCALE: 1/4" = 1'-0"

WORKING POINT COORDINATES			
NO.	NORTHING	EASTING	LOCATION
WP 1	599272.929	819488.727	CL MICROPILE 1
WP 2	599283.595	819505.779	CL MICROPILE 2
WP 3	599294.326	819527.787	CL MICROPILE 3
WP 4	599264.612	819492.776	CL MICROPILE 4
WP 5	599273.366	819510.758	CL MICROPILE 5
WP 6	599284.097	819532.767	CL MICROPILE 6

NOTES:

1. FOR GENERAL NOTES AND ABBREVIATIONS, SEE DWG NOS. STR-001 AND STR-002.
2. FOR TYPICAL SECTIONS AND TYPICAL DETAILS, SEE DWG NOS. STR-009, STR-010 AND STR-011.
3. REFER TO UTILITY AND OTHER TRADE DRAWINGS FOR DUCT BANK CONDUIT SIZE AND PENETRATION LOCATIONS THROUGH THE SLAB. IT IS THE RESPONSIBILITY OF THE CONTRACTOR TO COORDINATE ALL CONDUIT PENETRATION LOCATIONS.
4. FOR REINFORCEMENT DETAILS, SEE DWG NOS. STR-09, STR-010 AND STR-011.
5. MICROPILES SHALL BE PAID FOR UNDER THE ITEM "MICROPILE". THE CONTRACTOR SHALL SUBMIT DESIGN CALCULATIONS PREPARED BY A PROFESSIONAL ENGINEER LICENSED IN THE STATE OF CONNECTICUT.
6. FOR MICROPILE DETAILS, SEE DWG NO. STR-007.

SCALE: 1/2" = 1'-0"

REV.	DATE	REVISION DESCRIPTION	SHEET NO.

THE INFORMATION, INCLUDING ESTIMATED QUANTITIES OF WORK, SHOWN ON THESE SHEETS IS BASED ON LIMITED INVESTIGATIONS BY THE STATE AND IS IN NO WAY WARRANTED TO INDICATE THE CONDITIONS OF ACTUAL QUANTITIES OF WORK WHICH WILL BE REQUIRED.

Plotted Date: 6/24/2019

DESIGNER/DRAFTER: ASD
CHECKED BY: PDG
SCALE IN FEET 0 1 2
SCALE 1/4"=1'-0"

STATE OF CONNECTICUT
DEPARTMENT OF TRANSPORTATION

Filename: ...\STR-006_CNS_SHEET_0300-0202.dgn

SIGNATURE/ BLOCK:
GARG CONSULTING SERVICES, INC.
2096A Silas Deane Highway
Rocky Hill, CT 06067
Tel: (860) 563-0582
APPROVED BY: E. CHUANG DATE: 06/26/2019

STATE OF CONNECTICUT EUGENE Y. CHUANG NO. 23258 LICENSED PROFESSIONAL ENGINEER

PROJECT TITLE:
NETWORK INFRASTRUCTURE UPGRADE FOR SECURITY
NEW HAVEN LINE
PHASE 3

TOWN: STAMFORD TO WESTPORT

DRAWING TITLE: NODE HOUSE - FOUNDATION PLAN

PROJECT NO. 0300-0202
DRAWING NO. STR-006
SHEET NO. 06.07

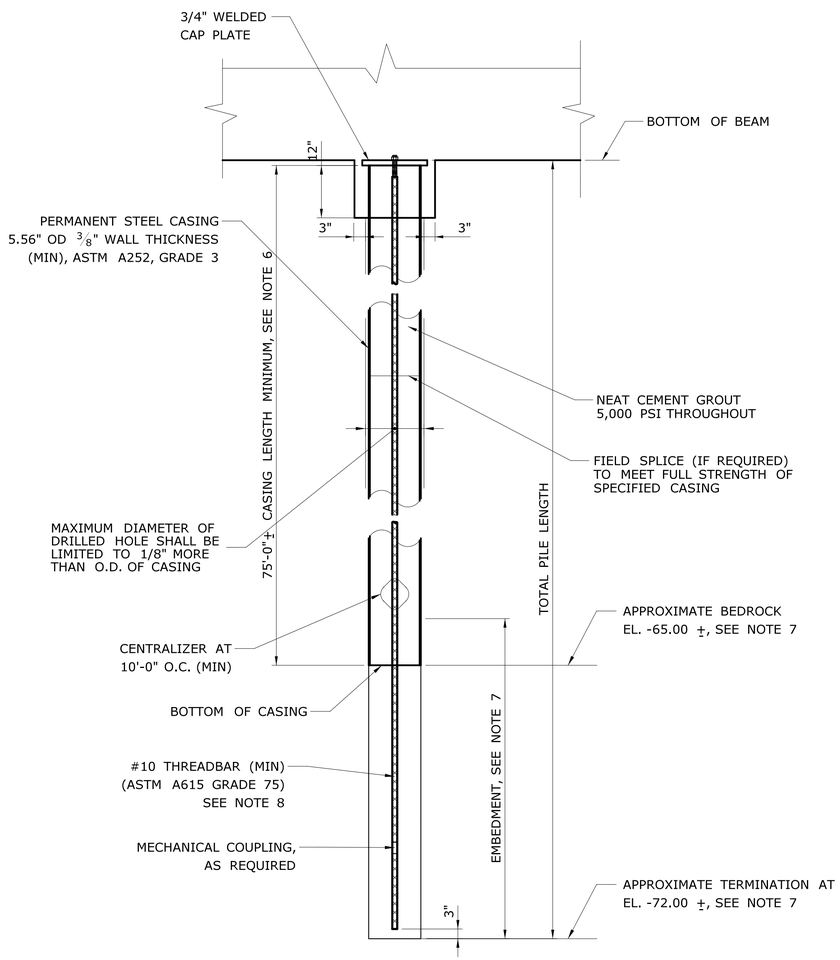

DRILLED MICROPILE ELEVATION

NTS

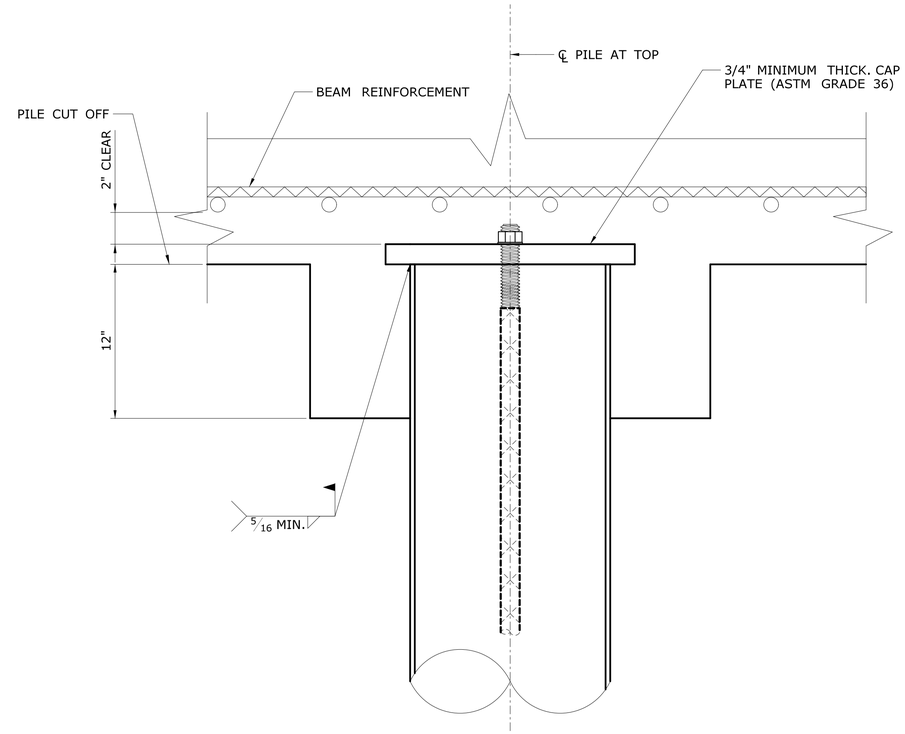

PILE TOP DETAIL

NTS

NOTES:

1. FOR GENERAL NOTES AND ABBREVIATIONS, SEE DWG NOS. STR-001 AND STR-002.
2. THE CONTRACTOR SHALL DESIGN AND INSTALL MICROPILE THAT WILL DEVELOP THE LOAD CAPACITIES INDICATED ON DWG NO. STR-006. THE CONTRACTOR SHALL SUBMIT PILE DESIGN CALCULATIONS PREPARED BY A PROFESSIONAL ENGINEER LICENSED IN THE STATE OF CONNECTICUT.
3. MICROPILES SHALL BE DRILLED THROUGH ALL MATERIALS ENCOUNTERED.
4. THE ATTACHED BORING LOG ON DWG NO. STR-005 IS FOR REFERENCE ONLY. THE CONTRACTOR SHALL VERIFY THE EXISTING CONDITIONS BEFORE THE START OF WORK.
5. THE CONTRACTOR SHALL PLACE EXCAVATED MATERIAL BELOW THE BALLAST AND/OR DISTRIBUTE EVENLY IN THE CTDOT PARCELS LOCATED ADJACENT TO THE PROPOSED NODE HOUSE.
6. THE CASING SHALL EXTEND 6" MIN INTO BEDROCK.
7. THE CONTRACTOR SHALL DETERMINE THE LENGTH OF EMBEDMENT INTO BEDROCK BASED ON HIS INVESTIGATIONS. THE EMBEDMENT DESIGN CALCULATIONS SHALL BE SUBMITTED TO THE ENGINEER FOR APPROVAL, SEE SPECIAL PROVISIONS.
8. THE CONTRACTOR SHALL DETERMINE THE SIZE AND REINFORCEMENT REQUIRED FOR THE MICROPILE AND SUBMIT CALCULATIONS PREPARED BY PROFESSIONAL ENGINEER LICENSED IN THE STATE OF CONNECTICUT.
9. MICROPILES SHALL BE PAID FOR UNDER THE ITEM "MICROPILES".

REV.	DATE	REVISION DESCRIPTION	SHEET NO.

THE INFORMATION, INCLUDING ESTIMATED QUANTITIES OF WORK, SHOWN ON THESE SHEETS IS BASED ON LIMITED INVESTIGATIONS BY THE STATE AND IS IN NO WAY WARRANTED TO INDICATE THE CONDITIONS OF ACTUAL QUANTITIES OF WORK WHICH WILL BE REQUIRED.

Plotted Date: 6/25/2019

DESIGNER/DRAFTER: ASD
CHECKED BY: PDG
NOT TO SCALE

STATE OF CONNECTICUT
DEPARTMENT OF TRANSPORTATION

Filename: ...\STR-007_CNS_SHEET_0300-0202.dgn

SIGNATURE/BLOCK:
GARG CONSULTING SERVICES, INC.
2096A Silas Deane Highway
Rocky Hill, CT 06067
Tel: (860) 563-0582

APPROVED BY: E. CHUANG
DATE: 06/26/2019

STATE OF CONNECTICUT
EUGENE Y. CHUANG
NO. 23258
LICENSED
PROFESSIONAL ENGINEER

PROJECT TITLE:
NETWORK INFRASTRUCTURE UPGRADE FOR SECURITY
NEW HAVEN LINE
PHASE 3

TOWN: STAMFORD TO WESTPORT

DRAWING TITLE: NODE HOUSE - PILE SECTIONS & DETAILS

PROJECT NO. 0300-0202
DRAWING NO. STR-007
SHEET NO. 06.08

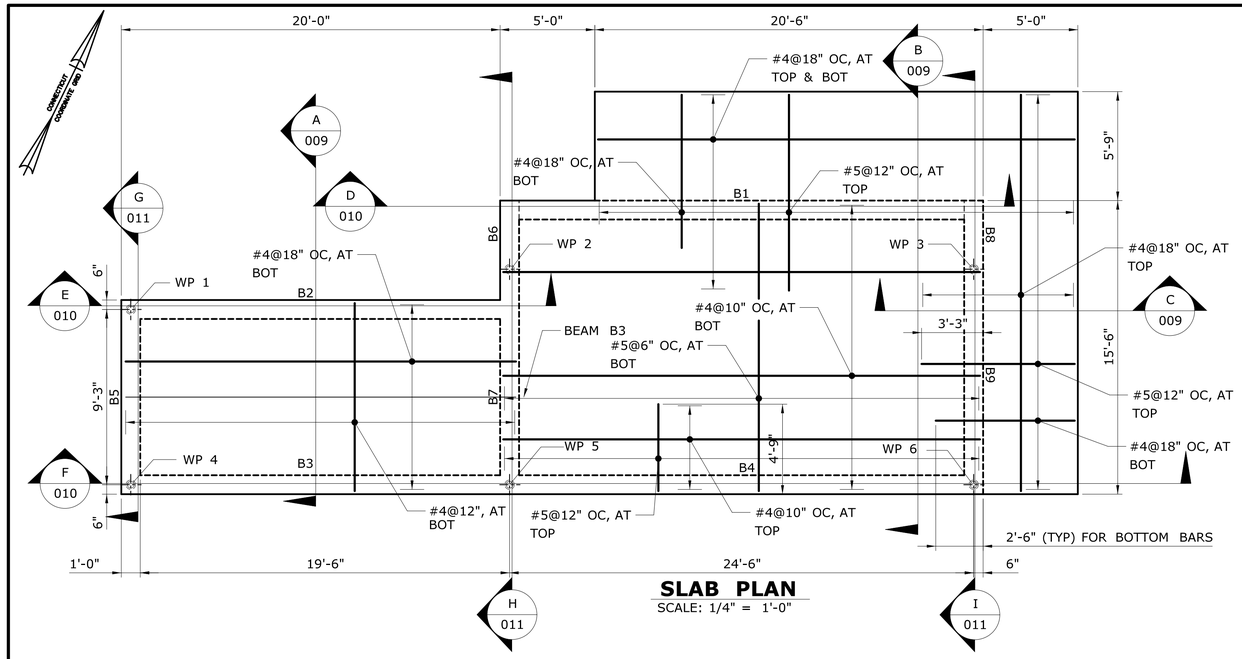

SLAB PLAN

SCALE: 1/4" = 1'-0"

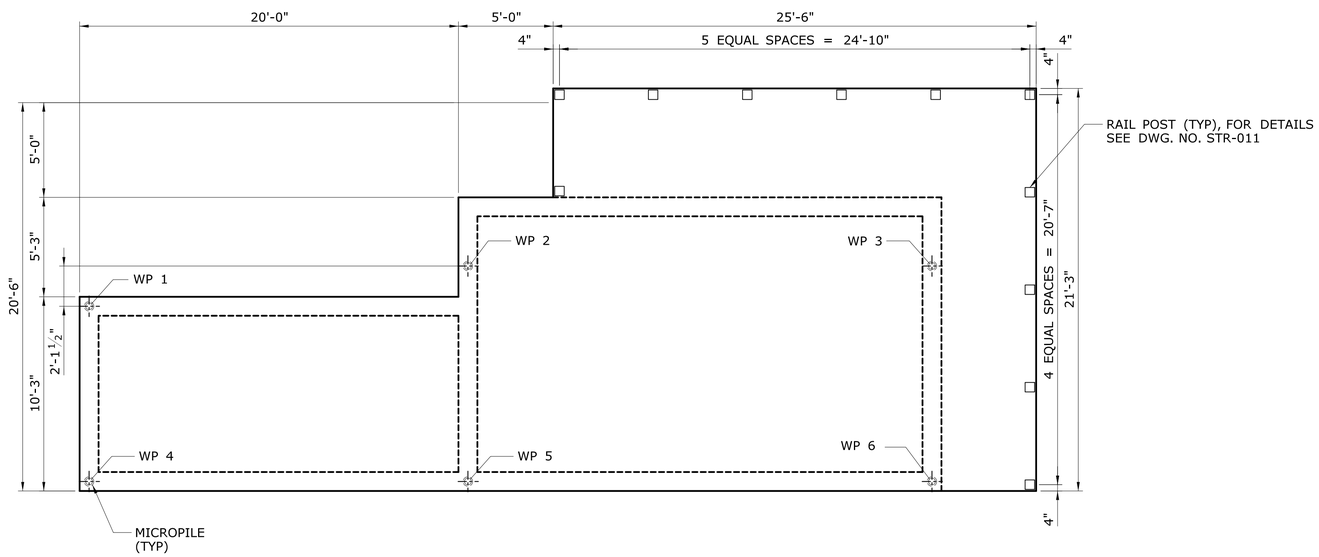

RAIL POST SPACING

SCALE: 1/4" = 1'-0"

NOTES:

1. FOR GENERAL NOTES AND ABBREVIATIONS, SEE DWG NOS. STR-001 AND STR-002.
2. FOR WORKING POINT COORDINATES, REFER TO DWG. NO. STR-006.
3. FOR TYPICAL SLAB DETAILS, REFER TO DWG NO. STR-009.
4. FOR BEAM DETAILS, REFER TO DWG NOS. STR-010 & STR-011.
5. CONCRETE SHALL BE PAID FOR UNDER THE ITEM "CLASS 'F' CONCRETE".
6. REINFORCEMENT SHALL BE PAID FOR UNDER THE ITEM "DEFORMED STEEL BARS - EPOXY COATED".
7. RAIL SYSTEM SHALL BE FRP POSTS AND RAILS, FOR DETAILS REFER TO DWG NO. STR-012.
8. IT IS THE RESPONSIBILITY OF THE CONTRACTOR TO COORDINATE THE PANEL AND CABINET LOCATIONS ON THE CONCRETE SLAB. CONTRACTOR SHALL COORDINATE WITH OTHER TRADE DRAWINGS.
9. THE NODE HOUSE STRUCTURE SHALL BE SECURELY ANCHORED TO THE SUPPORTING STRUCTURE. THE CONTRACTOR SHALL SUBMIT SHOP DRAWINGS WITH DESIGN CALCULATIONS FOR THE ANCHORAGE, PREPARED BY A PROFESSIONAL ENGINEER LICENSED IN THE STATE OF CONNECTICUT.
10. FOR TYPICAL EQUIPMENT PAD DETAILS, SEE DWG NO. STR-009.

REV.	DATE	REVISION DESCRIPTION	SHEET NO.

THE INFORMATION, INCLUDING ESTIMATED QUANTITIES OF WORK, SHOWN ON THESE SHEETS IS BASED ON LIMITED INVESTIGATIONS BY THE STATE AND IS IN NO WAY WARRANTED TO INDICATE THE CONDITIONS OF ACTUAL QUANTITIES OF WORK WHICH WILL BE REQUIRED.

Plotted Date: 6/24/2019

DESIGNER/DRAFTER: ASD
CHECKED BY: PDG
SCALE IN FEET 0 1 2
SCALE 1/4"=1'-0"

STATE OF CONNECTICUT
DEPARTMENT OF TRANSPORTATION

Filename: ...\STR-008_CNS_SHEET_0300-0202.dgn

SIGNATURE/BLOCK:
GARG CONSULTING SERVICES, INC.
2096A Silas Deane Highway
Rocky Hill, CT 06067
Tel: (860) 563-0582

APPROVED BY: E. CHUANG
DATE: 06/26/2019

STATE OF CONNECTICUT EUGENE Y. CHUANG NO. 23258 PROFESSIONAL ENGINEER

PROJECT TITLE:
NETWORK INFRASTRUCTURE UPGRADE FOR SECURITY NEW HAVEN LINE PHASE 3

TOWN: **STAMFORD TO WESTPORT**

DRAWING TITLE: **NODE HOUSE - SLAB PLAN**

PROJECT NO. 0300-0202
DRAWING NO. STR-008
SHEET NO. 06.09

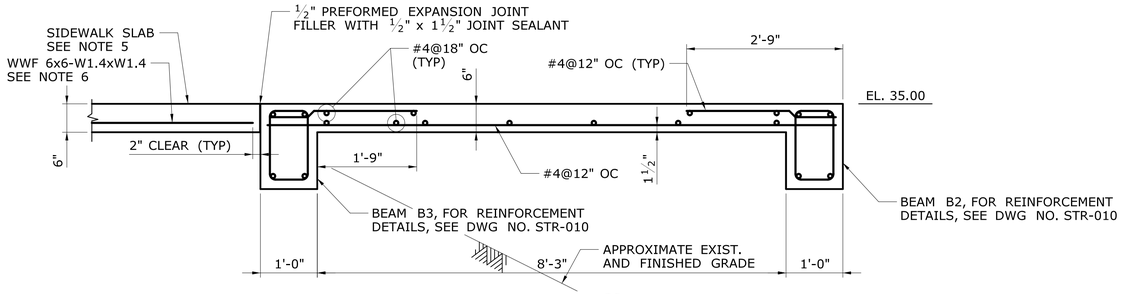

SECTION A 008
SCALE: 3/4" = 1'-0"

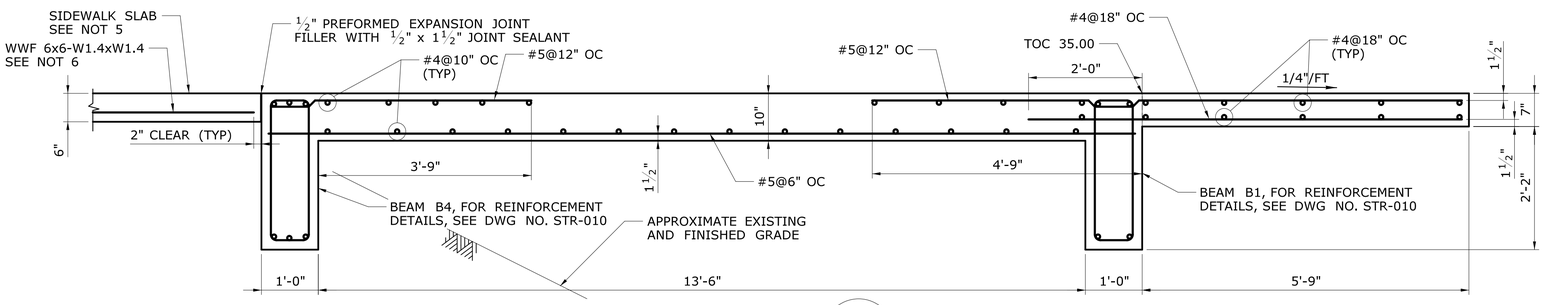

SECTION B 008
SCALE: 3/4" = 1'-0"

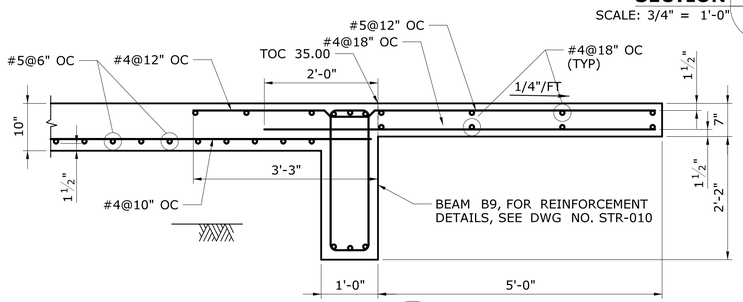

SECTION C 008
SCALE: 3/4" = 1'-0"

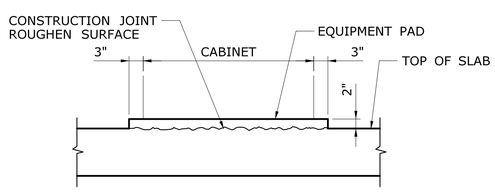

TYPICAL EQUIPMENT PAD DETAIL
SCALE: 3/4" = 1'-0"

NOTES:

1. FOR GENERAL NOTES AND ABBREVIATIONS, SEE DWG NOS. STR-001 & STR-002.
2. FOR FOUNDATION PLAN, SEE DWG NO. STR-006.
3. FOR SLAB PLAN AND RAIL POST SPACING, SEE DWG NO. STR-008.
4. REINFORCEMENT SHALL BE PAID FOR UNDER THE ITEM "DEFORMED STEEL BARS - EPOXY COATED".
5. CONCRETE SHALL BE PAID FOR UNDER THE ITEM "CLASS 'F' CONCRETE".
6. WELDED WIRE FABRIC SHALL BE PAID FOR UNDER ITEM "WELDED WIRE FABRIC - EPOXY COATED".

REV.	DATE	REVISION DESCRIPTION	SHEET NO.

THE INFORMATION, INCLUDING ESTIMATED QUANTITIES OF WORK, SHOWN ON THESE SHEETS IS BASED ON LIMITED INVESTIGATIONS BY THE STATE AND IS IN NO WAY WARRANTED TO INDICATE THE CONDITIONS OF ACTUAL QUANTITIES OF WORK WHICH WILL BE REQUIRED.

Plotted Date: 6/24/2019

DESIGNER/DRAFTER: ASD
CHECKED BY: PDG
SCALE IN FEET 0 1 2
SCALE 3/4"=1'-0"

STATE OF CONNECTICUT
DEPARTMENT OF TRANSPORTATION

Filename: ...\STR-009_CNS_SHEET_0300-0202.dgn

SIGNATURE/ BLOCK:
GARG CONSULTING SERVICES, INC.
2096A Silas Deane Highway
Rocky Hill, CT 06067
Tel: (860) 563-0582
APPROVED BY: E. CHUANG
DATE: 06/26/2019

STATE OF CONNECTICUT EUGENE Y. CHUANG NO. 23258 LICENSED PROFESSIONAL ENGINEER

PROJECT TITLE:
NETWORK INFRASTRUCTURE UPGRADE FOR SECURITY NEW HAVEN LINE PHASE 3

TOWN:
STAMFORD TO WESTPORT

DRAWING TITLE:
NODE HOUSE - TYPICAL SECTIONS & DETAILS - 1

PROJECT NO. 0300-0202
DRAWING NO. STR-009
SHEET NO. 06.010

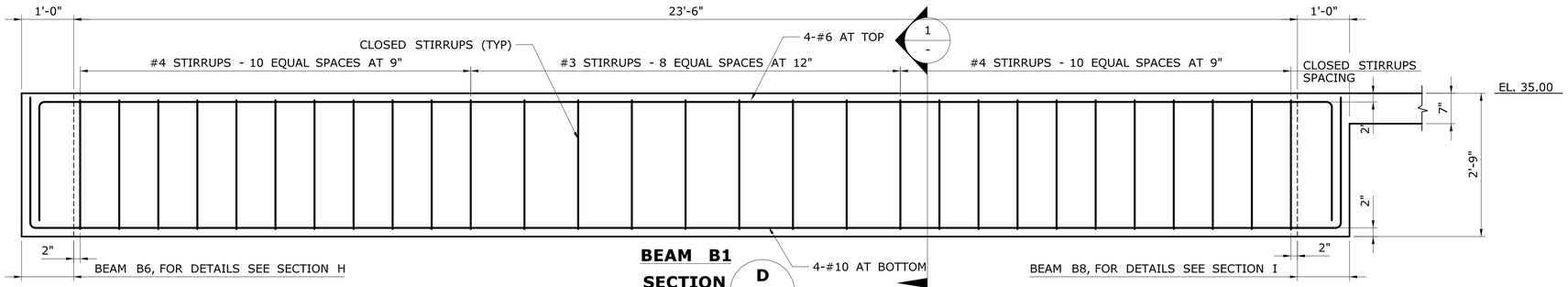

BEAM B1

SECTION D 008

SCALE: 3/4" = 1'-0"

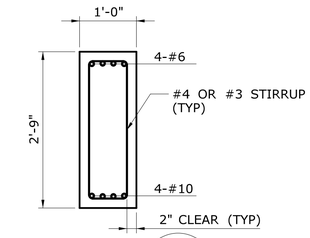

SECTION 1 -

SCALE: 3/4" = 1'-0"

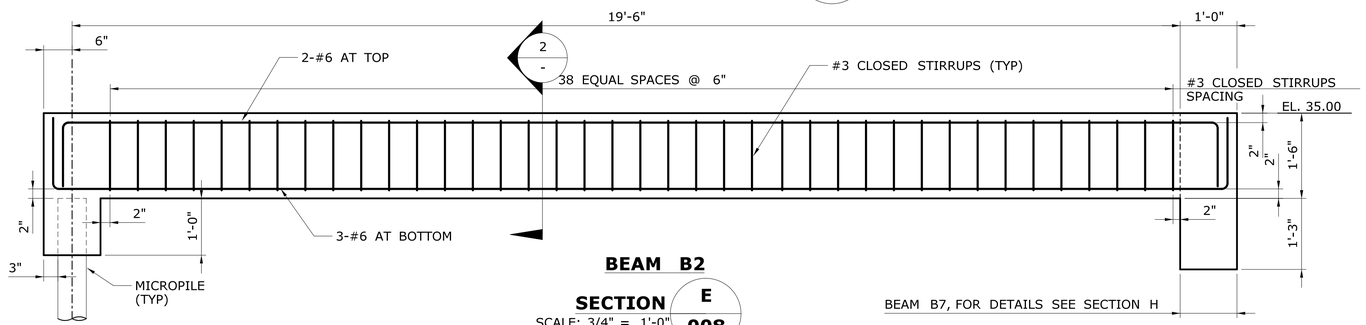

BEAM B2

SECTION E 008

SCALE: 3/4" = 1'-0"

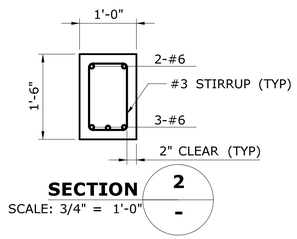

SECTION 2 -

SCALE: 3/4" = 1'-0"

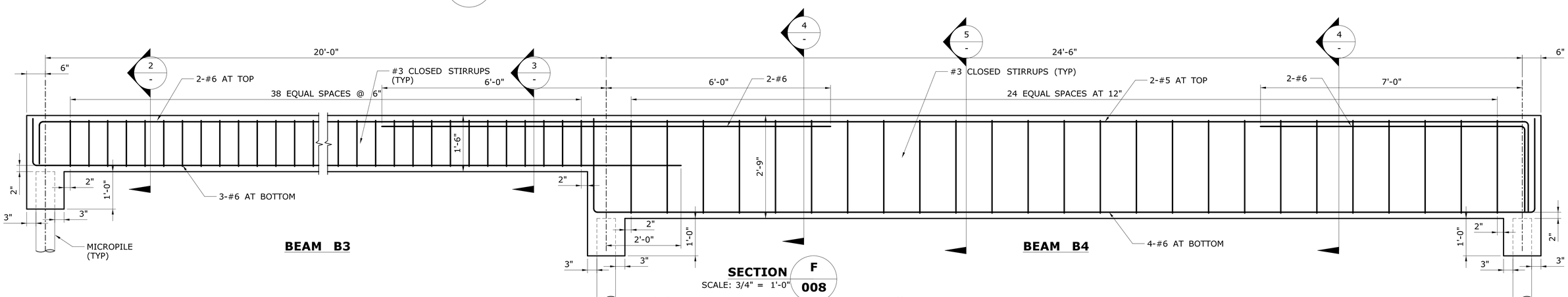

BEAM B3

BEAM B4

SECTION F 008

SCALE: 3/4" = 1'-0"

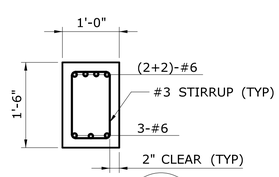

SECTION 3 -

SCALE: 3/4" = 1'-0"

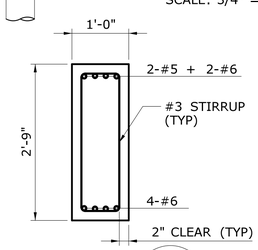

SECTION 4 -

SCALE: 3/4" = 1'-0"

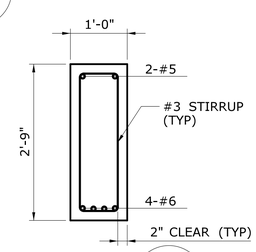

SECTION 5 -

SCALE: 3/4" = 1'-0"

NOTES:

1. FOR GENERAL NOTES AND ABBREVIATIONS, SEE DWG NOS. STR-001 & STR-002.
2. FOR SLAB PLAN AND RAIL POST SPACING, SEE DWG NO. STR-008.
3. FOR SECTION I, SEE DWG NO. STR-011.
4. REINFORCEMENT SHALL BE PAID FOR UNDER THE ITEM "DEFORMED STEEL BARS - EPOXY COATED".
5. CONCRETE SHALL BE PAID FOR UNDER THE ITEM "CLASS 'F' CONCRETE".
6. FOR DETAILS OF MICROPILE REINFORCEMENT, SEE DWG NO. STR-007.

REV.	DATE	REVISION DESCRIPTION	SHEET NO.

THE INFORMATION, INCLUDING ESTIMATED QUANTITIES OF WORK, SHOWN ON THESE SHEETS IS BASED ON LIMITED INVESTIGATIONS BY THE STATE AND IS IN NO WAY WARRANTED TO INDICATE THE CONDITIONS OF ACTUAL QUANTITIES OF WORK WHICH WILL BE REQUIRED.

Plotted Date: 6/24/2019

DESIGNER/DRAFTER: ASD

CHECKED BY: PDG

SCALE IN FEET 0 1 2

SCALE 3/4"=1'-0"

STATE OF CONNECTICUT
DEPARTMENT OF TRANSPORTATION

Filename: ...\STR-010_CNS_SHEET_0300-0202.dgn

SIGNATURE/BLOCK:
GARG CONSULTING SERVICES, INC.
2096A Silas Deane Highway
Rocky Hill, CT 06067
Tel: (860) 563-0582

APPROVED BY: E. CHUANG
DATE: 06/26/2019

STATE OF CONNECTICUT
EUGENE Y. CHUANG
NO. 23288
LICENSED
PROFESSIONAL ENGINEER

PROJECT TITLE:
NETWORK INFRASTRUCTURE UPGRADE FOR SECURITY NEW HAVEN LINE PHASE 3

TOWN: **STAMFORD TO WESTPORT**

DRAWING TITLE: **NODE HOUSE - TYPICAL SECTIONS & DETAILS - 2**

PROJECT NO. 0300-0202

DRAWING NO. STR-010

SHEET NO. 06.011

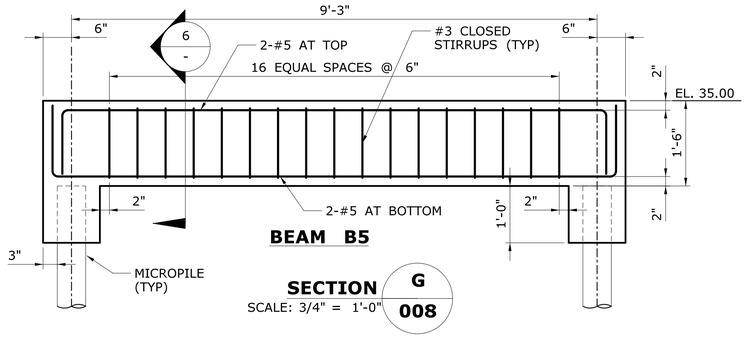

BEAM B5

SECTION G 008
SCALE: 3/4" = 1'-0"

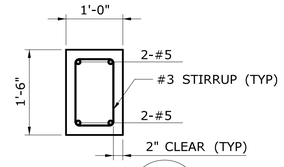

SECTION 6 -
SCALE: 3/4" = 1'-0"

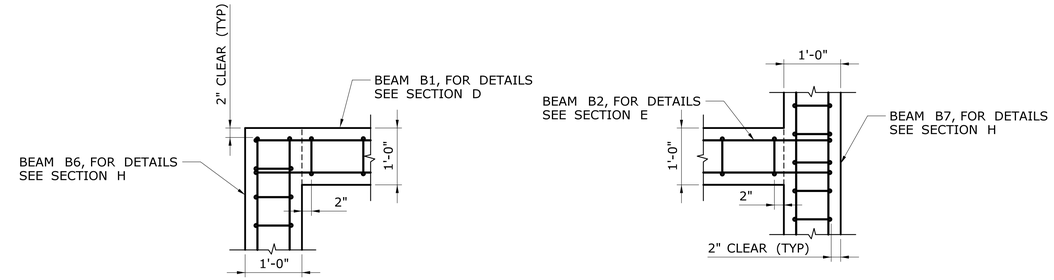

B1/B6 DETAILS **B2/B7 DETAILS**

BEAM JUNCTION DETAILS
SCALE: 3/4" = 1'-0"

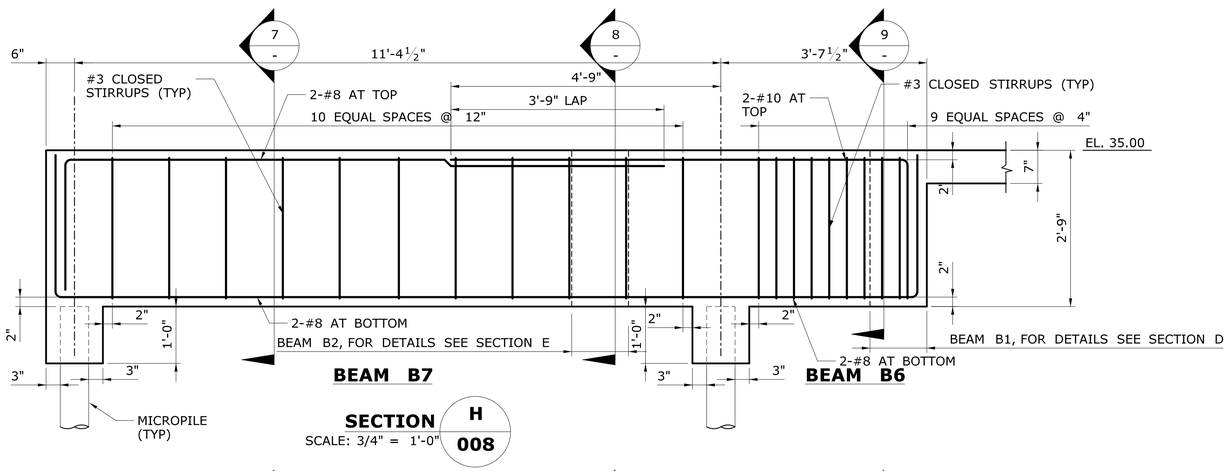

SECTION H 008
SCALE: 3/4" = 1'-0"

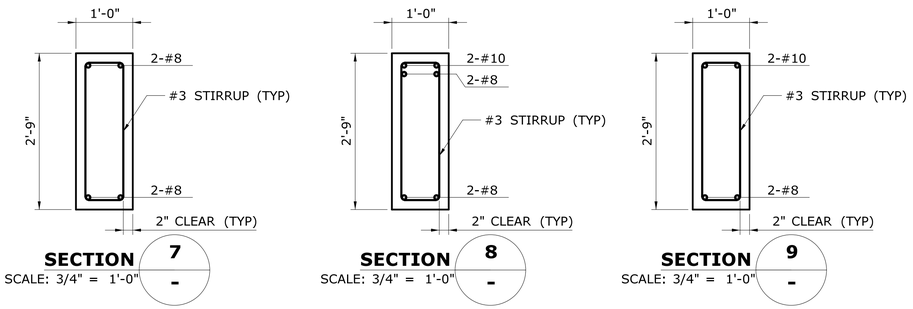

SECTION 7 -
SCALE: 3/4" = 1'-0"

SECTION 8 -
SCALE: 3/4" = 1'-0"

SECTION 9 -
SCALE: 3/4" = 1'-0"

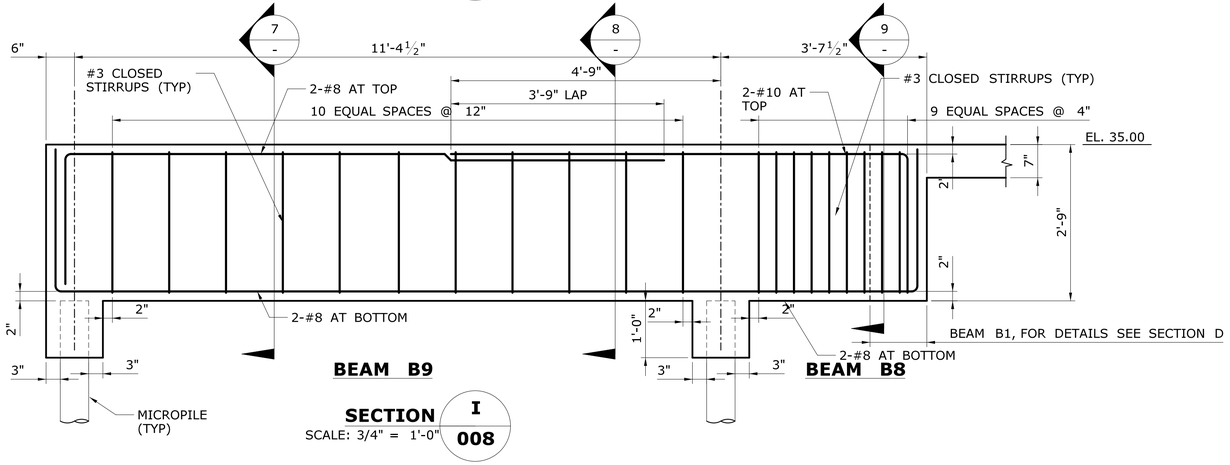

SECTION I 008
SCALE: 3/4" = 1'-0"

NOTES:

1. FOR GENERAL NOTES AND ABBREVIATIONS, SEE DWG NOS. STR-001 & STR-002.
2. FOR SLAB PLAN AND RAIL POST SPACING, SEE DWG NO. STR-008.
3. FOR SECTIONS D & E, SEE DWG NO. STR-010.
4. REINFORCEMENT SHALL BE PAID FOR UNDER THE ITEM "DEFORMED STEEL BARS - EPOXY COATED".
5. CONCRETE SHALL BE PAID FOR UNDER THE ITEM "CLASS 'F' CONCRETE".
6. FOR MICROPILE REINFORCEMENT DETAILS, SEE DWG NO.STR-007.

REV.	DATE	REVISION DESCRIPTION	SHEET NO.

THE INFORMATION, INCLUDING ESTIMATED QUANTITIES OF WORK, SHOWN ON THESE SHEETS IS BASED ON LIMITED INVESTIGATIONS BY THE STATE AND IS IN NO WAY WARRANTED TO INDICATE THE CONDITIONS OF ACTUAL QUANTITIES OF WORK WHICH WILL BE REQUIRED.

Plotted Date: 6/24/2019

DESIGNER/DRAFTER: ASD
CHECKED BY: PDG
SCALE IN FEET 0 1 2
SCALE 3/4"=1'-0"

STATE OF CONNECTICUT
DEPARTMENT OF TRANSPORTATION

Filename: ...\STR-011_CNS_SHEET_0300-0202.dgn

SIGNATURE/BLOCK: GARG CONSULTING SERVICES, INC.
2096A Silas Deane Highway
Rocky Hill, CT 06067
Tel: (860) 563-0582

APPROVED BY: E. CHUANG DATE: 06/26/2019

STATE OF CONNECTICUT EUGENE Y. CHUANG NO. 23258 LICENSED PROFESSIONAL ENGINEER

PROJECT TITLE:
NETWORK INFRASTRUCTURE UPGRADE FOR SECURITY NEW HAVEN LINE PHASE 3

TOWN: **STAMFORD TO WESTPORT**

DRAWING TITLE: **NODE HOUSE - TYPICAL SECTIONS & DETAILS - 3**

PROJECT NO. 0300-0202
DRAWING NO. STR-011
SHEET NO. 06.012

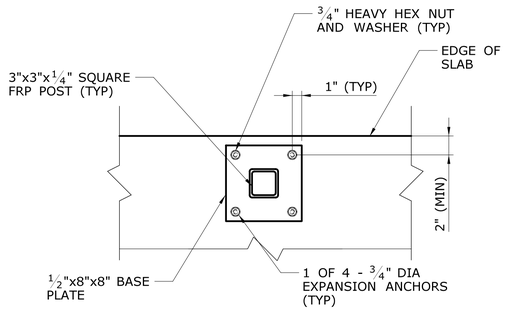

NOTE:
CONTRACTOR IS RESPONSIBLE FOR THE DESIGN OF THE POST ANCHORAGE, WHICH SHALL CONFORM TO OSHA LOAD REQUIREMENTS. THE DESIGN SHALL BE SIGNED AND SEALED BY A PROFESSIONAL ENGINEER LICENSED IN THE STATE OF CONNECTICUT.

TYPICAL FRP POST DETAIL
NOT TO SCALE

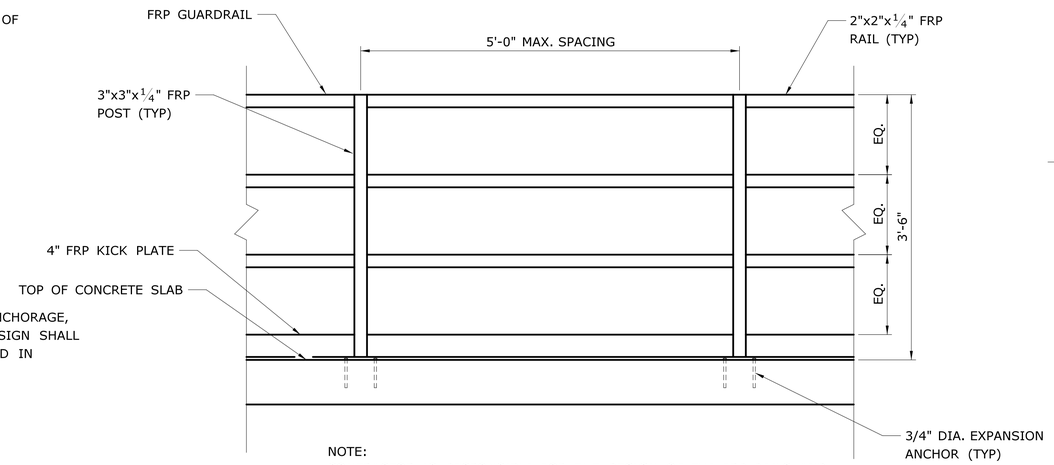

NOTE:
CONTRACTOR IS RESPONSIBLE FOR THE DESIGN OF THE FRP RAILS AND POSTS, WHICH SHALL CONFORM TO OSHA LOAD REQUIREMENTS. THE DESIGN SHALL BE SIGNED AND SEALED BY A PROFESSIONAL ENGINEER LICENSED IN THE STATE OF CONNECTICUT.

ELEVATION

FRP GUARDRAIL DETAIL
NOT TO SCALE

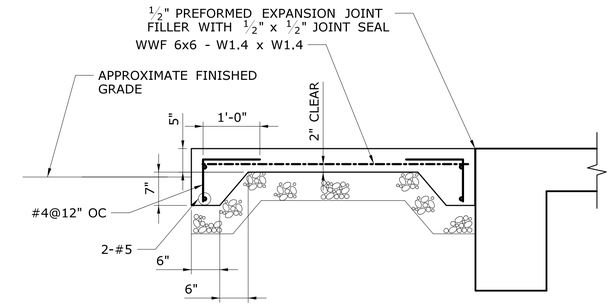

TYPICAL SIDEWALK DETAIL
NOT TO SCALE

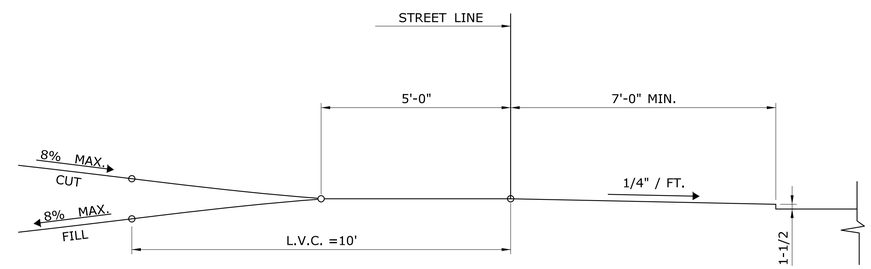

TYPICAL DRIVEWAY RECONSTRUCTION DETAIL
NOT TO SCALE

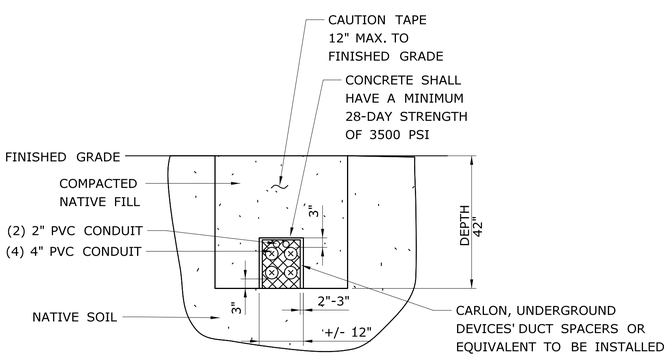

CONCRETE DUCT BANK DETAIL
(4) 4" DIA. SCH. 40 PVC CONDUIT
DUCT BANK (2 OVER 2) SHOWING CONDUIT SPACERS

NOTE:
DUCT BANK CONFIGURATION VARIES, FOR DETAILS SEE DWG NO. STR-003

TYPICAL TRENCH DETAIL
NOT TO SCALE

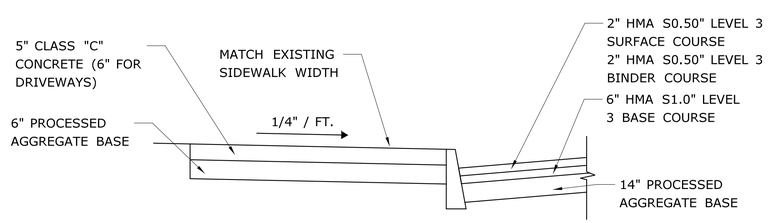

TYPICAL SIDEWALK & PAVEMENT RECONSTRUCTION DETAIL
NOT TO SCALE

NOTES:

1. FOR GENERAL NOTES AND ABBREVIATIONS, SEE DWG NOS. STR-001 & STR-002.
2. WELDED WIRE FABRIC SHALL BE PAID FOR UNDER THE ITEM "WELDED WIRE FABRIC - EPOXY COATED".
3. CONCRETE FOR THE SIDEWALK SHALL BE PAID FOR UNDER THE ITEM "CLASS 'F' CONCRETE'.
4. THE COST OF FURNISHING AND INSTALLING THE FRP RAILING UNDER THE ITEM "SECURITY NODE HOUSE".

REV.	DATE	REVISION DESCRIPTION	SHEET NO.

THE INFORMATION, INCLUDING ESTIMATED QUANTITIES OF WORK, SHOWN ON THESE SHEETS IS BASED ON LIMITED INVESTIGATIONS BY THE STATE AND IS IN NO WAY WARRANTED TO INDICATE THE CONDITIONS OF ACTUAL QUANTITIES OF WORK WHICH WILL BE REQUIRED.

Plotted Date: 6/25/2019

DESIGNER/DRAFTER: ASD
CHECKED BY: PDG
SCALE AS NOTED

STATE OF CONNECTICUT
DEPARTMENT OF TRANSPORTATION

Filename: ...\STR-012_CNS_SHEET_0300-0202.dgn

SIGNATURE/BLOCK:
GARG CONSULTING SERVICES, INC.
2096A Silas Deane Highway
Rocky Hill, CT 06067
Tel: (860) 563-0582

APPROVED BY: E. CHUANG
DATE: 06/26/2019

STATE OF CONNECTICUT
EUGENE Y. CHUANG
NO. 23256
LICENSED
PROFESSIONAL ENGINEER

PROJECT TITLE:
NETWORK INFRASTRUCTURE UPGRADE FOR SECURITY NEW HAVEN LINE PHASE 3

TOWN: STAMFORD TO WESTPORT

DRAWING TITLE: NODE HOUSE - MISCELLANEOUS DETAILS

PROJECT NO. 0300-0202
DRAWING NO. STR-012
SHEET NO. 06.013

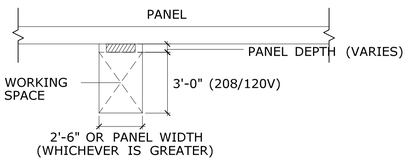

PLAN

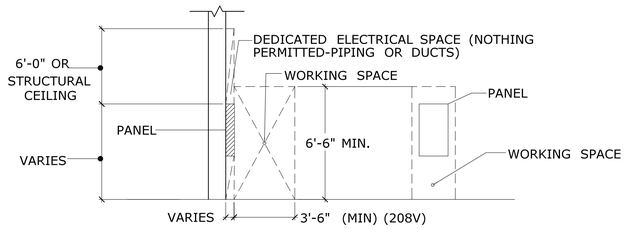

SIDE ELEVATION FRONT ELEVATION

NOTE: ACCESS AND WORKING SPACE AS DETERMINED BY N.E.C. SECTION 110-26.

ELECTRICAL EQUIPMENT CLEARANCES

NTS

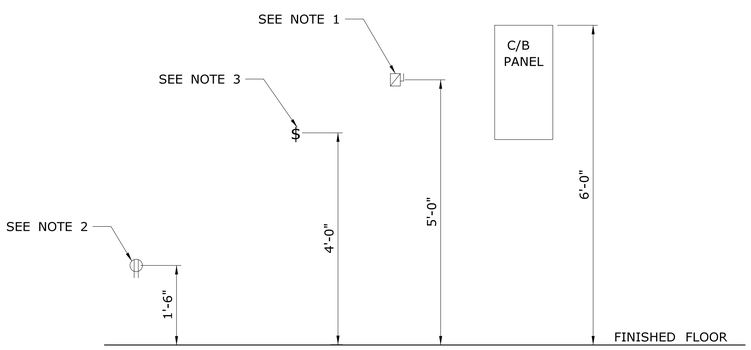

DEVICE MOUNTING HEIGHTS

NTS

NOTES:

1. MEASURED TO THE TOP OF THE OPERATING HANDLE IN THE "ON" POSITION. TYPICAL FOR NON-FUSED SWITCHES AND COMBINATION FUSED SWITCH/MAGNETIC STARTERS.
2. INCLUDES ALL RECEPTACLES, UNLESS OTHERWISE NOTED ON DRAWINGS.
3. INCLUDES ALL LIGHT SWITCHES, UNLESS OTHERWISE NOTED ON DRAWINGS.

ELECTRICAL SYMBOL LEGEND

SYMBOL	DESCRIPTION	ABBREV.	DESCRIPTION
$	SINGLE POLE SWITCH	A	AMPS OR AMPERAGE
$3	THREE WAY SWITCH	AFG	ABOVE FINISHED GRADE
$4	FOUR WAY SWITCH	ATS	AUTOMATIC TRANSFER SWITCH
$OS	OCCUPANCY SWITCH WITH TIMER	CB	CIRCUIT BREAKER
$WP	WATERPROOF CONVENIENCE OUTLET	C	CONDUIT
	DUPLEX RECEPTACLE	CTR	COUNTER
D	DEDICATED DUPLEX RECEPTACLE	CIR, CKT	CIRCUIT
GFCI	GFCI DUPLEX RECEPTACLE	Cu	COPPER
	DOUBLE DUPLEX RECEPTACLE	DP	DISTRIBUTION PANEL
	208/120V CIRCUIT BREAKER PANEL	EC, E.C.	ELECTRICAL CONTRACTOR
	HEAVY DUTY DISCONNECT SWITCH	FA	FIRE ALARM
	HEAVY DUTY FUSED DISCONNECT SWITCH	FP	FIRE PROTECTION
	CEILING MOUNTED LED LIGHT FIXTURE	G	GROUND
	WALL MOUNTED LIGHT FIXTURE	GEN	GENERATOR
EF	EXHAUST FAN	HP	HEAT PUMP
	TELE/DATA OUTLET, WALL MOUNTED AT 18"AFF	KVA	KILOVOLTAMPERES
FACP	FIRE ALARM CONTROL PANEL	KW	KILOWATTS
CACP	CLEAN AGENT CONTROL PANEL	MANU.	MANUFACTURER
F	MANUAL PULL STATION	MDP	MAIN DISTRIBUTION PANEL
	FA HORN STROBE	RMC	RIGID METAL CONDUIT
S	SMOKE DETECTOR	TYP	TYPICAL
H	HEAT DETECTOR	WH	WATER HEATER
	TWIST-LOCK SWITCH	V	VOLTS OR VOLTAGE
		X	LIGHT TYPE FIXTURE DESIGNATION
		(#)	CIRCUIT NUMBER
		#	PLAN NOTE CALL OUT NUMBER

REV.	DATE	REVISION DESCRIPTION	SHEET NO.

THE INFORMATION, INCLUDING ESTIMATED QUANTITIES OF WORK, SHOWN ON THESE SHEETS IS BASED ON LIMITED INVESTIGATIONS BY THE STATE AND IS IN NO WAY WARRANTED TO INDICATE THE CONDITIONS OF ACTUAL QUANTITIES OF WORK WHICH WILL BE REQUIRED.

Plotted Date: 7/2/2019

DESIGNER/DRAFTER: JH

CHECKED BY: MG

NOT TO SCALE

STATE OF CONNECTICUT
DEPARTMENT OF TRANSPORTATION

Filename: ...\ELE-001_CNS_SHEET_0300-0202.dgn

SIGNATURE/BLOCK:
GARG CONSULTING SERVICES, INC.
2096A Silas Deane Highway
Rocky Hill, CT 06067
Tel: (860) 563-0582

APPROVED BY: E. CHUANG DATE: 06/26/2019

STATE OF CONNECTICUT EUGENE Y. CHUANG NO. 23258 LICENSED PROFESSIONAL ENGINEER

PROJECT TITLE:
NETWORK INFRASTRUCTURE UPGRADE FOR SECURITY NEW HAVEN LINE PHASE 3

TOWN: STAMFORD TO WESTPORT

DRAWING TITLE: NODE HOUSE - ELECTRICAL LEGEND

PROJECT NO. 0300-0202

DRAWING NO. ELE-001

SHEET NO. 06.014

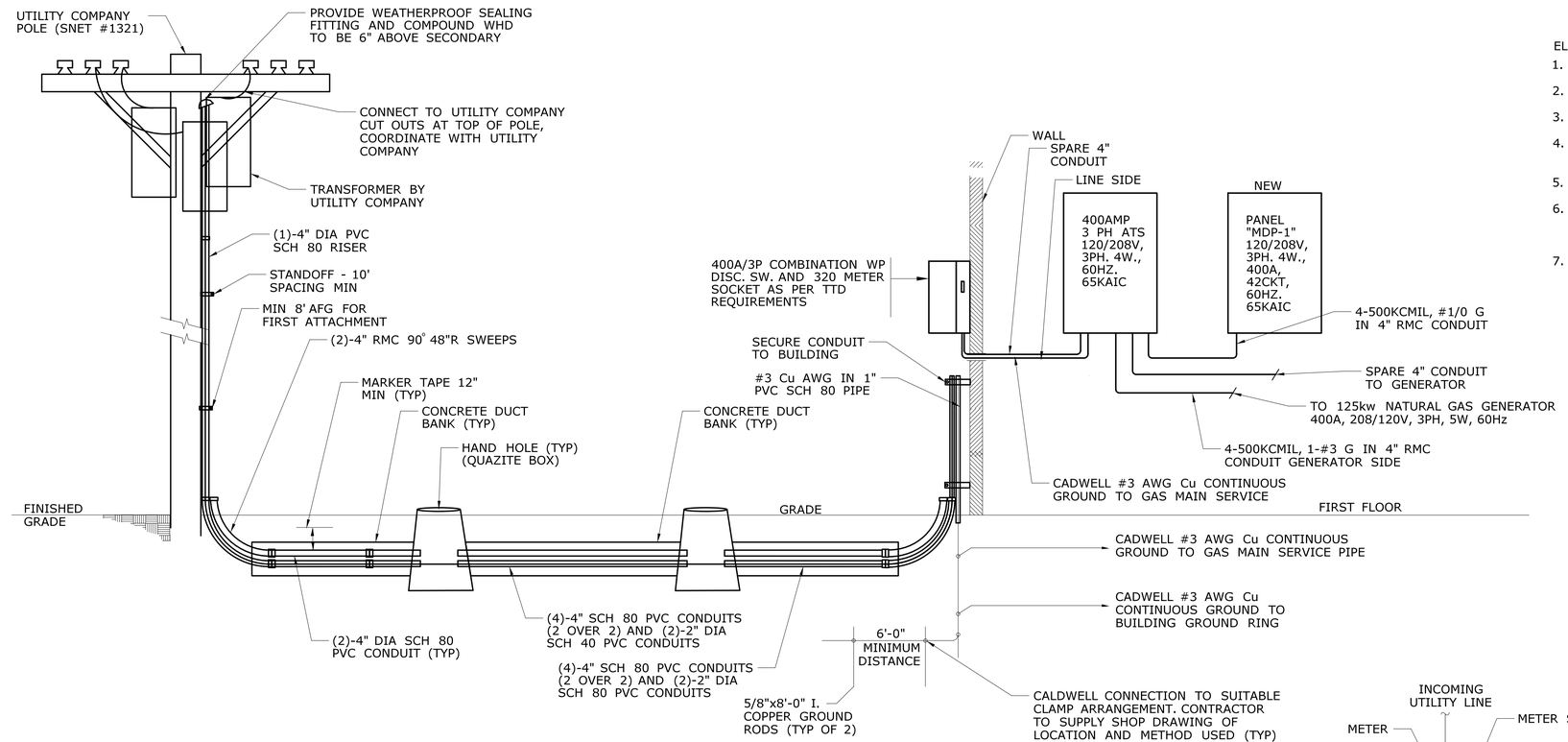

ELECTRICAL RISER DIAGRAM

NOT TO SCALE

ELECTRICAL RISER NOTES:

1. PROVIDE LAMICOID IDENTIFICATION LABELS FOR ALL NEW PANELBOARDS.
2. PROVIDE TYPED BRANCH CIRCUIT DIRECTORIES FOR ALL PANELBOARDS.
3. FUSE SIZE AS REQUIRED BY EQUIPMENT MANUFACTURER.
4. ALL ELECTRICAL SERVICE EQUIPMENT AND PANELBOARDS SHALL BE AS MANUFACTURED BY GE, SIEMENS OR EQUAL.
5. REFER TO DRAWING PLANS FOR PANEL LOCATIONS.
6. ELECTRICAL CONTRACTOR SHALL ENSURE THAT ALL SHORT CIRCUIT RATINGS ARE BASED ON AN IMPEDANCE FACTOR OF 5.0 AND CONTRACTOR SHALL VERIFY IMPEDANCE RATING OF PAD MOUNTED TRANSFORMER WITH POWER COMPANY.
7. THE CONTRACTOR SHALL SEAL ALL PENETRATIONS THROUGH EXTERNAL WALLS AND SLABS WITH A UL APPROVED FIRE STOP TO MAINTAIN THE INTEGRITY OF THE FIRE RATING. REFER TO SPECIFICATIONS FOR WALL RATINGS. PROVIDE SHOP DRAWINGS FOR ALL PENETRATIONS.

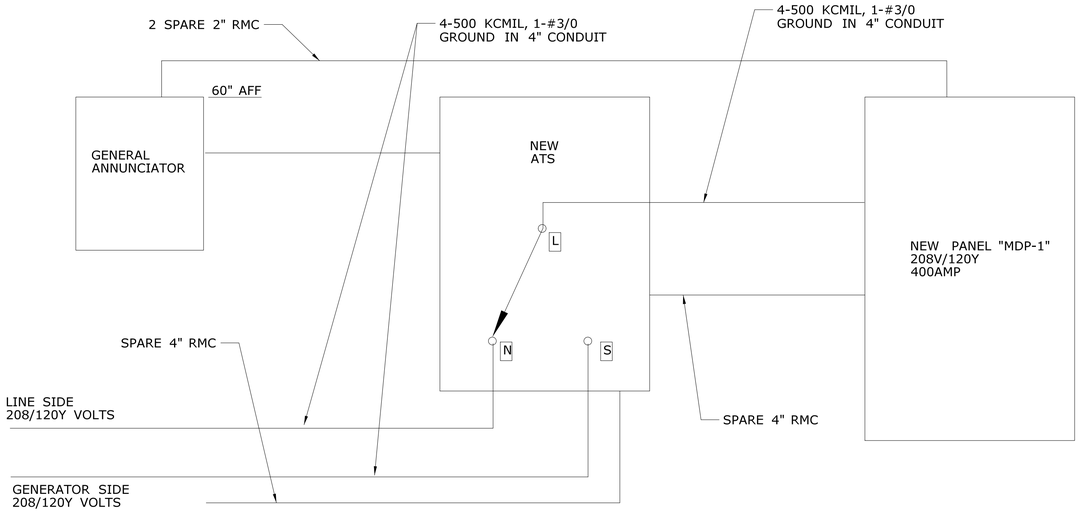

NODE HOUSE POWER RISER PLAN

NOT TO SCALE

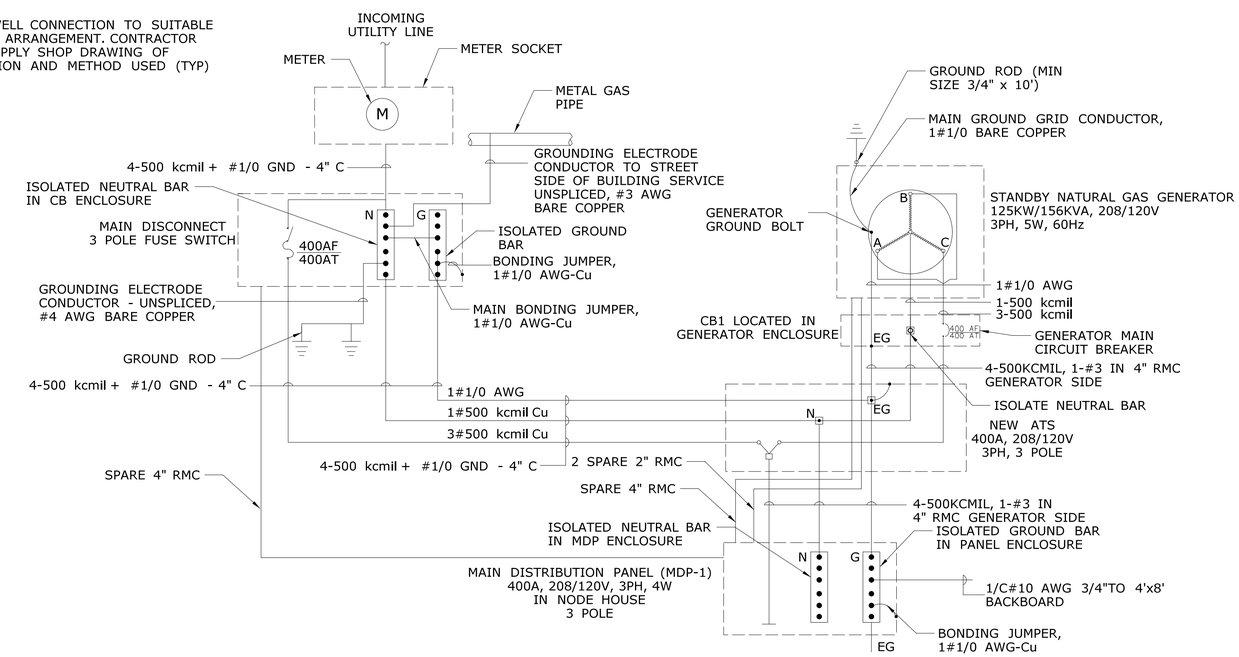

GENERATOR RISER DIAGRAM

NOT TO SCALE

REV.	DATE	REVISION DESCRIPTION	SHEET NO.

THE INFORMATION, INCLUDING ESTIMATED QUANTITIES OF WORK, SHOWN ON THESE SHEETS IS BASED ON LIMITED INVESTIGATIONS BY THE STATE AND IS IN NO WAY WARRANTED TO INDICATE THE CONDITIONS OF ACTUAL QUANTITIES OF WORK WHICH WILL BE REQUIRED.

Plotted Date: 6/27/2019

DESIGNER/DRAFTER: JH

CHECKED BY: MG

NOT TO SCALE

STATE OF CONNECTICUT
DEPARTMENT OF TRANSPORTATION

Filename: ...\ELE-002_CNS_SHEET_0300-0202.dgn

SIGNATURE/BLOCK:
GARG CONSULTING SERVICES, INC.
2096A Silas Deane Highway
Rocky Hill, CT 06067
Tel: (860) 563-0582

APPROVED BY: E. CHUANG
DATE: 06/26/2019

STATE OF CONNECTICUT
EUGENE Y. CHUANG
NO. 23258
LICENSED
PROFESSIONAL ENGINEER

PROJECT TITLE:
NETWORK INFRASTRUCTURE UPGRADE FOR SECURITY NEW HAVEN LINE PHASE 3

TOWN: **STAMFORD TO WESTPORT**

DRAWING TITLE: **NODE HOUSE - ELECTRICAL POWER RISER PLAN**

PROJECT NO. **0300-0202**

DRAWING NO. **ELE-002**

SHEET NO. **06.015**

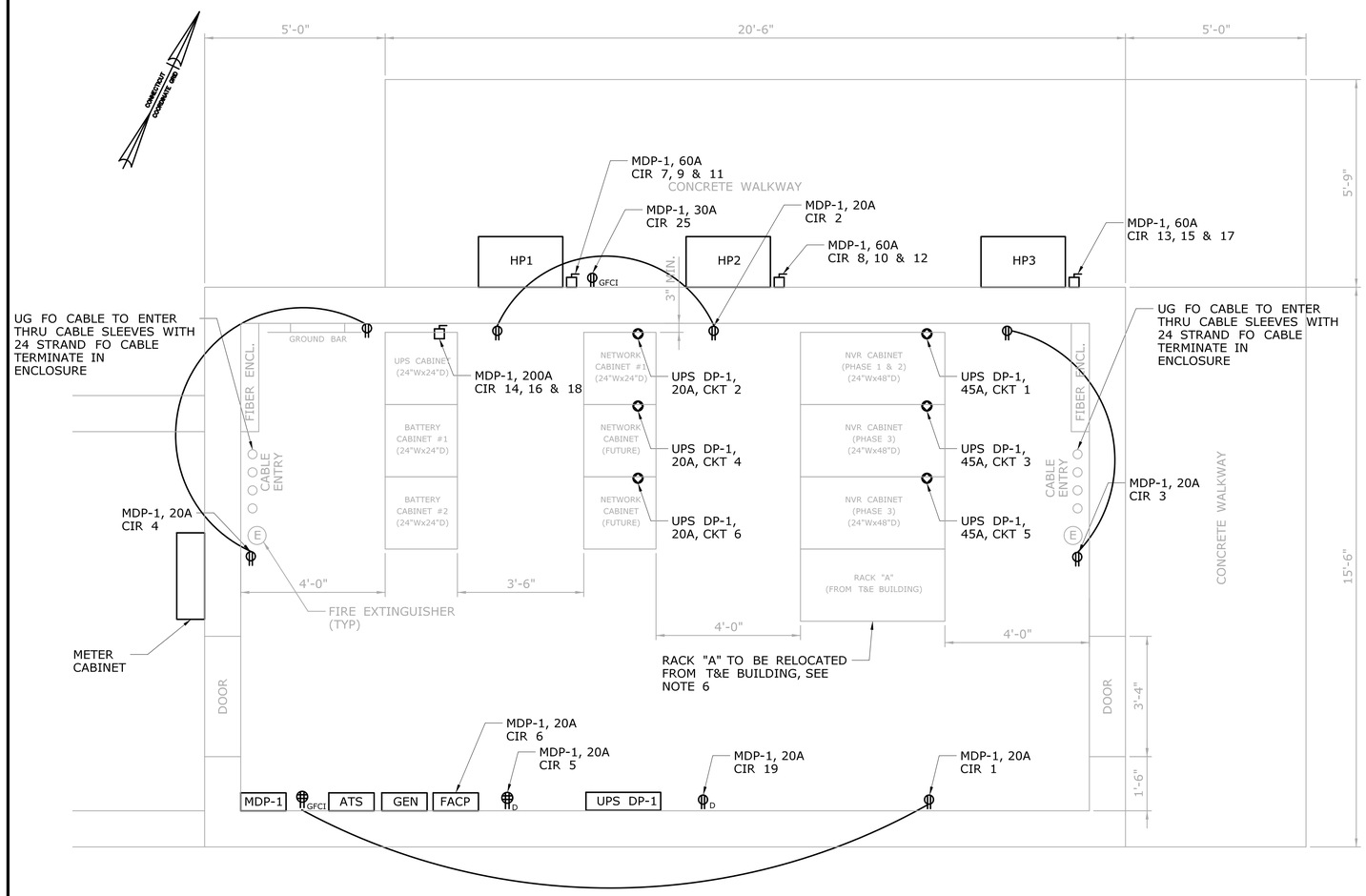

POWER PLAN

SCALE: 1/2" = 1'-0"

NOTES:

1. FOR GENERAL NOTES AND ABBREVIATIONS, SEE DWG. NO. ELE-001.
2. FOR DEVICE MOUNTING HEIGHTS, SEE DWG. NO. ELE-001.
3. FOR PANEL DETAILS, SEE DWG. NO. ELE-005.
4. FOR LIGHT SCHEDULE, SEE DWG. NO. ELE-005.
5. FOR NETWORK CABINET & NVR CABINET DETAILS, SEE DWG NOS. FCI-650 AND FCI-652.
6. ALL COSTS ASSOCIATED WITH RELOCATION OF RACK "A" FROM T&E BUILDING SHALL BE INCLUDED UNDER THE ITEM "SECURITY NODE HOUSE".

REV.	DATE	REVISION DESCRIPTION	SHEET NO.

THE INFORMATION, INCLUDING ESTIMATED QUANTITIES OF WORK, SHOWN ON THESE SHEETS IS BASED ON LIMITED INVESTIGATIONS BY THE STATE AND IS IN NO WAY WARRANTED TO INDICATE THE CONDITIONS OF ACTUAL QUANTITIES OF WORK WHICH WILL BE REQUIRED.

Plotted Date: 7/2/2019

DESIGNER/DRAFTER: JH

CHECKED BY: MG

SCALE IN FEET 0 1 2

SCALE 1/2" = 1'-0"

STATE OF CONNECTICUT
DEPARTMENT OF TRANSPORTATION

Filename: ...\ELE-003_CNS_SHEET_0300-0202.dgn

SIGNATURE/ BLOCK:
GARG CONSULTING SERVICES, INC.
2096A Silas Deane Highway
Rocky Hill, CT 06067
Tel: (860) 563-0582

APPROVED BY: E. CHUANG DATE: 06/26/2019

STATE OF CONNECTICUT EUGENE Y. CHUANG NO. 23258 LICENSED PROFESSIONAL ENGINEER

PROJECT TITLE:
NETWORK INFRASTRUCTURE UPGRADE FOR SECURITY NEW HAVEN LINE PHASE 3

TOWN:
STAMFORD TO WESTPORT

DRAWING TITLE:
NODE HOUSE - ELECTRICAL POWER PLAN

PROJECT NO. **0300-0202**

DRAWING NO. **ELE-003**

SHEET NO. **06.016**

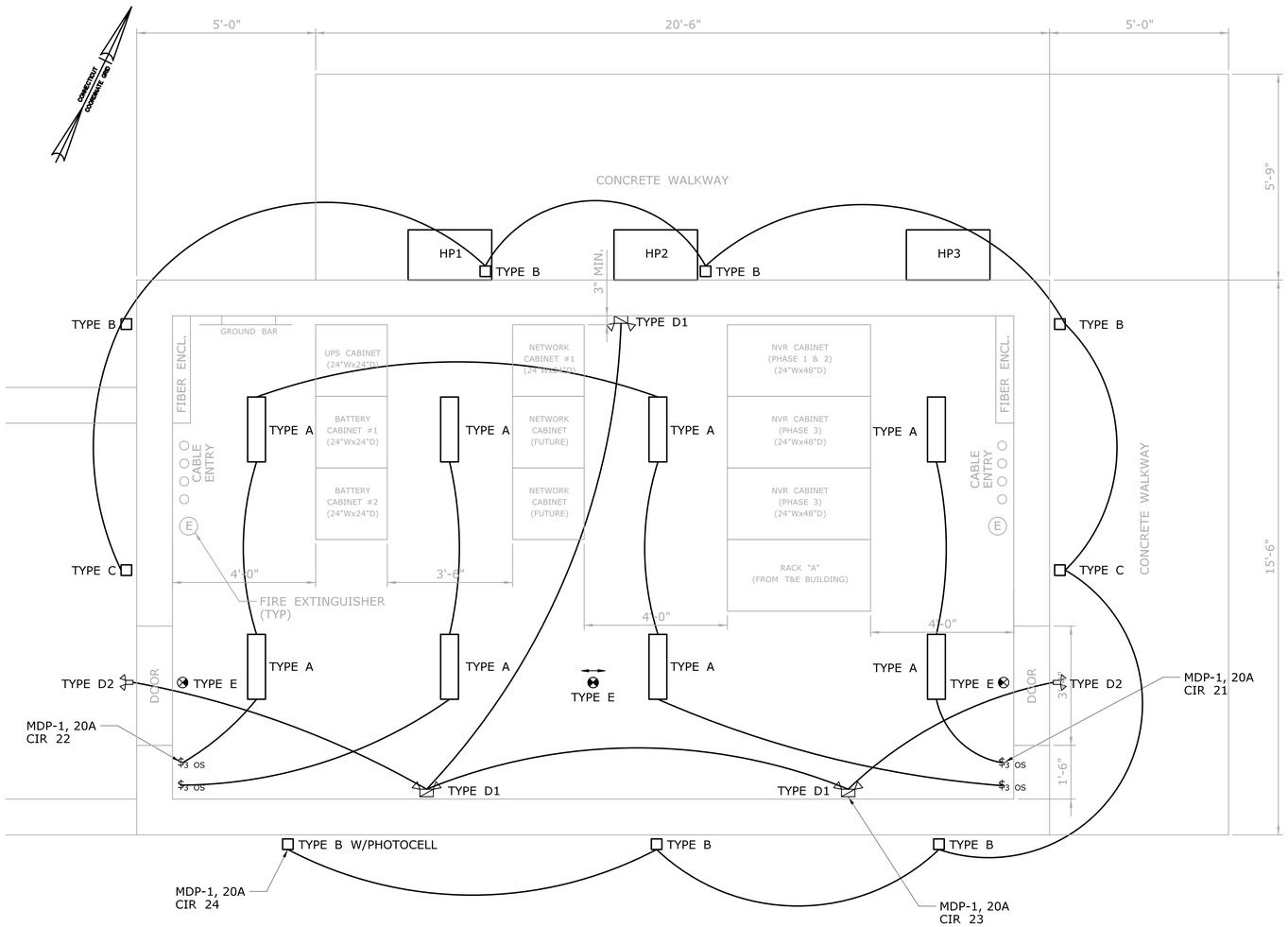

LIGHTING - POWER PLAN

SCALE: 1/2" = 1'-0"

NOTES:

1. FOR GENERAL NOTES AND ABBREVIATIONS, SEE DWG. NO. ELE-001.
2. FOR DEVICE MOUNTING HEIGHTS, SEE DWG. NO. ELE-001.
3. FOR PANEL DETAILS, SEE DWG. NO. ELE-005.
4. FOR LIGHT SCHEDULE, SEE DWG. NO. ELE-005.
5. FOR NETWORK CABINET & NVR CABINET DETAILS, SEE DWG NOS. FCI-650 AND FCI-652.

REV.	DATE	REVISION DESCRIPTION	SHEET NO.

THE INFORMATION, INCLUDING ESTIMATED QUANTITIES OF WORK, SHOWN ON THESE SHEETS IS BASED ON LIMITED INVESTIGATIONS BY THE STATE AND IS IN NO WAY WARRANTED TO INDICATE THE CONDITIONS OF ACTUAL QUANTITIES OF WORK WHICH WILL BE REQUIRED.

Plotted Date: 7/2/2019

DESIGNER/DRAFTER: JH

CHECKED BY: MG

SCALE IN FEET 0 1 2

SCALE 1/2"=1'-0"

STATE OF CONNECTICUT
DEPARTMENT OF TRANSPORTATION

Filename: ...\ELE-004_CNS_SHEET_0300-0202.dgn

SIGNATURE/BLOCK:
GARG CONSULTING SERVICES, INC.
2096A Silas Deane Highway
Rocky Hill, CT 06067
Tel: (860) 563-0582

APPROVED BY: E. CHUANG DATE: 06/26/2019

STATE OF CONNECTICUT EUGENE Y. CHUANG NO. 23258 LICENSED PROFESSIONAL ENGINEER

PROJECT TITLE:
NETWORK INFRASTRUCTURE UPGRADE FOR SECURITY NEW HAVEN LINE PHASE 3

TOWN: **STAMFORD TO WESTPORT**

DRAWING TITLE: **NODE HOUSE - ELECTRICAL LIGHTING POWER PLAN**

PROJECT NO. 0300-0202

DRAWING NO. ELE-004

SHEET NO. 06.017

PANEL: MDP-1

LOCATION: SECURITY NODE HOUSE
MOUNTING: FLUSH

208/120V, 3 PHASE, 4 WIRE
400A COPPER BUS
400A MAIN CIRCUIT BREAKER 400AF/400AT
GROUND BUS, HINGED TRIM, 65KAIC

CIR	DESCRIPTION	VA	C/B	A	B	C	C/B	VA	DESCRIPTION	CIR
1	SOUTH WALL OUTLETS	540	20A	/			20A	720	NORTH WALL OUTLETS	2
3	EAST WALL OUTLETS	360	20A		/		20A	720	WEST WALL OUTLETS	4
5	DESK QUAD OUTLETS	720	20A			/	20A	1,200	FACP POWER	6
7		5,990	60A	/			60A	5,990		8
9	HP1	5,990	60A		/		60A	5,990	HP2	10
11		5,990	60A			/	60A	5,990		12
13		5,990	60A	/			200A	7,200		14
15	HP3	5,990	60A		/		200A	7,200	UPS/BATTERIES	16
17		5,990	60A			/	200A	7,200		18
19	CLEAN AGENT	1,200	20A	/			–	–	SPARE	20
21	OVERHEAD LIGHTS	720	20A		/		20A	720	OVERHEAD LIGHTS	22
23	EMERGENCY LIGHTS	720	20A			/	20A	720	EXTERNAL LIGHTS	24
25	NORTH WALL GFCI RECEPTACLE	360	30A	/			20A	1,200	GENERATOR BATTERY CHARGER	26
27	GENERATOR CONVENIENCE OUTLET		20A		/		–	–	SPARE	28
29	SPARE	–	–			/	–	–	SPARE	30
31	SPARE	–	–	/			–	–	SPARE	32
33	SPARE	–	–		/		–	–	SPARE	34
35	SPARE	–	–			/	–	–	SPARE	36
37	SPARE	–	–	/			–	–	SPARE	38
39	SPARE	–	–		/		–	–	SPARE	40
41	SPARE	–	–			/	–	–	SPARE	42

TOTAL A = 29,190 VA
B = 28,070 VA
C = 28,530 VA
TOTAL = 85,790 VA

PANEL: UPS DP-1

LOCATION: SECURITY NODE HOUSE
MOUNTING: FLUSH

208/120V, 3 PHASE, 4 WIRE
125A COPPER BUS
125A MAIN CIRCUIT BREAKER 125AF/125AT
GROUND BUS, HINGED TRIM, 45KAIC

CIR	DESCRIPTION	VA	C/B	A	B	C	C/B	VA	DESCRIPTION	CIR
1	NETWORK CABINET - PHASE 1 & 2	5,200	45A	/			20A	2,000	NETWORK CABINET - PHASE 1 & 2	2
3	NETWORK CABINET - PHASE 3	5,200	45A		/		20A	2,000	NETWORK CABINET - PHASE 3	4
5	NETWORK CABINET - PHASE 4	5,200	45A			/	20A	2,000	NETWORK CABINET - PHASE 4	6
7	SPARE	–	–	/				–	SPARE	8
9	SPARE	–	–		/		–	–	SPARE	10
11	SPARE	–	–			/		–	SPARE	12
13	SPARE	–	–	/			–	–	SPARE	14
15	SPARE	–	–		/		–	–	SPARE	16
17	SPARE	–	–			/	–	–	SPARE	18
19	SPARE	–	–	/			–	–	SPARE	20
21	SPARE	–	–		/		–	–	SPARE	22
23	SPARE	–	–			/	–	–	SPARE	24
25	SPARE	–	–	/			–	–	SPARE	26
27	SPARE	–	–		/		–	–	SPARE	28
29	SPARE	–	–			/	–	–	SPARE	30
31	SPARE	–	–	/			–	–	SPARE	32
33	SPARE	–	–		/		–	–	SPARE	34
35	SPARE	–	–			/	–	–	SPARE	36
37	SPARE	–	–	/			–	–	SPARE	38
39	SPARE	–	–		/		–	–	SPARE	40
41	SPARE	–	–			/	–	–	SPARE	42

TOTAL A = 7,200 VA
B = 7,200 VA
C = 7,200 VA
TOTAL = 21,600 VA

ELECTRICAL GENERAL NOTES:

1. ALL DIMENSIONS AND EXACT EQUIPMENT SHALL BE VERIFIED WITH MECHANICAL DRAWINGS AND CONDITIONS IN THE FIELD.
2. THE CONTRACTOR SHALL COORDINATE WITH ALL OTHER TRADES AND PROVIDE OTHERS WITH NECESSARY INFORMATION TO COMPLETE THIS INSTALLATION.
3. VERIFY AND COORDINATE EXACT LOCATIONS OF PANELS, OUTLETS AND JUNCTION BOXES WITH INSTALLER OF THE EQUIPMENT TO BE SERVED. OUTLETS SHOWN ON DRAWINGS ARE FOR ROUGH-IN PURPOSE. PROVIDE COMPLETE CONNECTIONS TO THE EQUIPMENT FROM OUTLET BOXES.
4. PROVIDE FIRE PROOF SEALANT AROUND CONDUITS PENETRATING FIRE RATED WALLS.
5. THE CONTRACTOR SHALL COORDINATE LOCATIONS OF ALL MECHANICAL, PLUMBING, FIRE PROTECTION AND OWNER FURNISHED EQUIPMENT, WITH RELEVANT TRADE DRAWINGS.
6. IN AREAS WHERE ONE FIXTURE IS SHOWN TO BE CONTROLLED BY A SWITCH OR SWITCHES, ALL OTHER CEILING MOUNTED FIXTURES IN THAT SPACE SHALL BE CONTROLLED BY THE SAME SWITCH(ES).
7. OCCUPANCY SENSORS SHALL CONTROL ALL LIGHT FIXTURES WITH 10 MINUTE DELAY OFF.
8. ALL EXIT LIGHT CHEVRONS SHALL BE VISIBLE TO A MINIMUM DISTANCE OF 40'-0" PER NFPA 101. POWER SHALL BE PROVIDED BY BRANCH CIRCUITS AHEAD OF SWITCHES.
9. ALL DIRECTIONAL, EMERGENCY LIGHTING LUMINAIRES SHALL BE AIMED TO PROVIDE EMERGENCY ILLUMINATION AT PATH(S) OF EGRESS. POWER SHALL BE PROVIDED BY BRANCH CIRCUITS AHEAD OF SWITCHES.
10. MC CABLE TO BE USED ONLY IN FURRED OUT WALLS AND HUNG CEILING AREAS FOR LIGHTING.
11. SWITCHES SHALL BE MOUNTED AT 4'-0" AND RECEPTACLES AT 1'-6" ABOVE FINISHED FLOOR AT THE CENTER OF BOX UNLESS OTHERWISE NOTED.
12. ALL BRANCH CIRCUIT WIRES AND FEEDERS SHALL BE PERMANENTLY TAGGED AT THE PANEL CONNECTION WITH "BRADY" MARKERS.
13. ALL WIRE SIZES ARE BASED ON COPPER THHN 90˚C; ALUMINUM IS NOT TO BE USED.
14. ALL EMPTY CONDUIT SYSTEMS SHALL CONTAIN A PULL WIRE FROM WALL OUTLET TO CEILING FOR FUTURE PULLING OF PHONE AND DATA CONDUCTORS AND TAG FOR FINAL LOCATION.

ELECTRICAL AND LIGHTING LEGEND

SYMBOL	MANU-FACTURER	MODEL NUMBER	DESCRIPTION
A	LITHONIA OR APPROVED EQUAL	ZLIN-L48-500OM	INDUSTRIAL, 4FT LED
B	LITHONIA OR APPROVED EQUAL	WST-LED P2 VW	LED WALLPACK
C	LITHONIA OR APPROVED EQUAL	WST-LED P1 VW	LED WALLPACK
EM D1	LITHONIA OR APPROVED EQUAL	ELM2	2 HEAD EMERGENCY- LED
RH D2	LITHONIA OR APPROVED EQUAL	ELATQWP LO304 SD	2 HEAD REMOTE- LED
E	LITHONIA OR APPROVED EQUAL	LHQM	EXIT-LED

WIRING, AMPERAGE AND RACEWAY CHART

OCP	WIRE SIZE	MAX CONT LOAD	GRND WIRE	RACEWAY	VOLTAGE
20A	12	16	12	3/4" C	120V, 1P
30A	10	24	10	3/4" C	120V, 1P
30A	10	24	10	3/4" C	120V, 1P
30A	10	24	10	3/4" C	120V, 1P
50A	8	40	10	1" C	120V, 1P

CONDUCTORS BASED ON 75 DEGREES TERMINAL RATINGS

REV.	DATE	REVISION DESCRIPTION	SHEET NO.

THE INFORMATION, INCLUDING ESTIMATED QUANTITIES OF WORK, SHOWN ON THESE SHEETS IS BASED ON LIMITED INVESTIGATIONS BY THE STATE AND IS IN NO WAY WARRANTED TO INDICATE THE CONDITIONS OF ACTUAL QUANTITIES OF WORK WHICH WILL BE REQUIRED.

Plotted Date: 6/24/2019

DESIGNER/DRAFTER: JH
CHECKED BY: MG
NOT TO SCALE

STATE OF CONNECTICUT
DEPARTMENT OF TRANSPORTATION

Filename: ...\ELE-005_CNS_SHEET_0300-0202.dgn

SIGNATURE/ BLOCK:
GARG CONSULTING SERVICES, INC.
2096A Silas Deane Highway
Rocky Hill, CT 06067
Tel: (860) 563-0582

APPROVED BY: E. CHUANG DATE: 06/26/2019

STATE OF CONNECTICUT EUGENE Y. CHUANG NO. 23258 LICENSED PROFESSIONAL ENGINEER

PROJECT TITLE:
NETWORK INFRASTRUCTURE UPGRADE FOR SECURITY NEW HAVE LINE PHASE 3

TOWN: STAMFORD TO WESTPORT

DRAWING TITLE: NODE HOUSE - ELECTRICAL SCHEDULE & DETAILS

PROJECT NO. 0300-0202
DRAWING NO. ELE-005
SHEET NO. 06.018

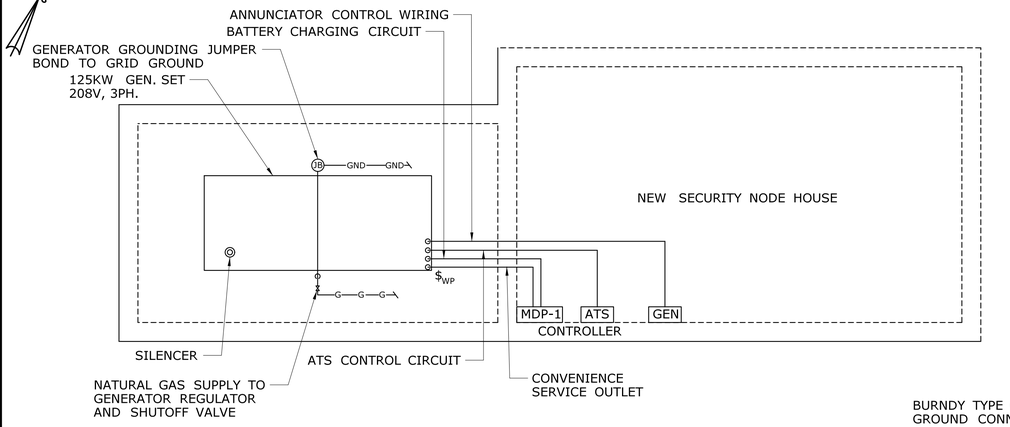

NOTE:

ALL WIRING/CIRCUITS FROM GENERATOR TO THE BUILDING SHALL BE INSTALLED IN RGS CONDUITS BELOW THE GENERATOR PAD.

STANDBY GENERATOR PLAN

NOT TO SCALE

GENERATOR SCHEDULE
COMMERCIAL SERIES 125KW NATURAL GAS - 60 HZ. 208 VOLT 3 PHASE, 434 AMP MAXIMUM CAPACITY
6.8L ENGINE, SIZE 142"L x 60"W x 70"H, 3409LBS EMPTY WEIGHT

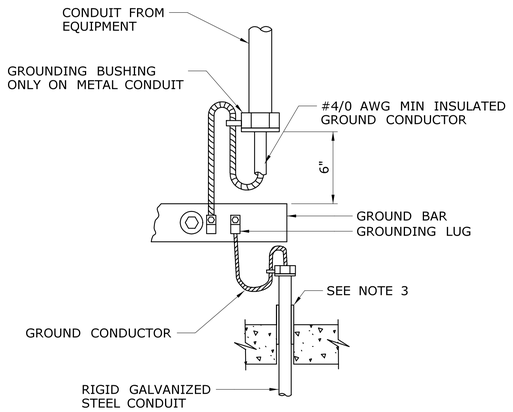

TYP. GROUNDING ATTACHMENTS TO THE GROUND BAR

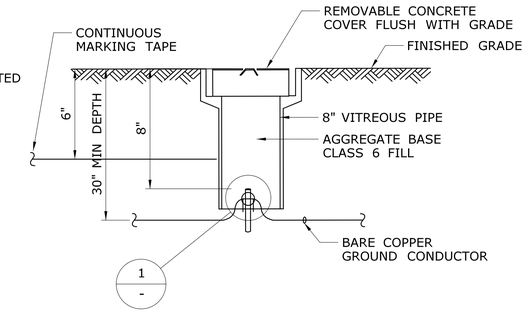

TYP. GROUNDING ROD WELL

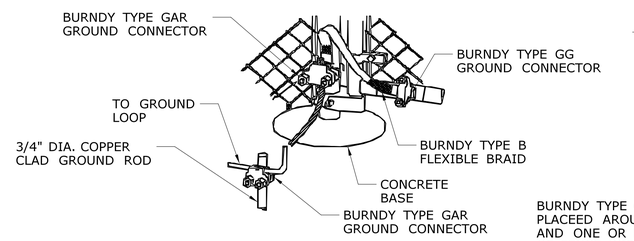

GATE GROUNDING DETAIL

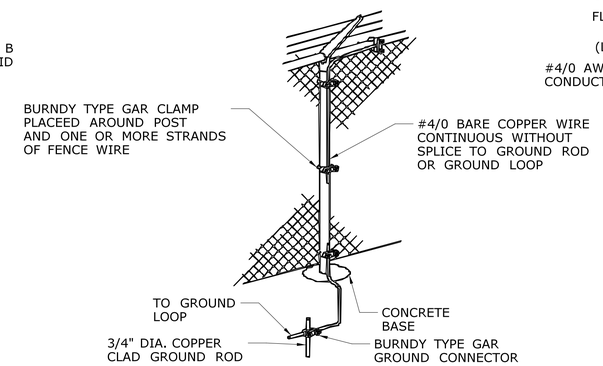

FENCE GROUNDING DETAIL

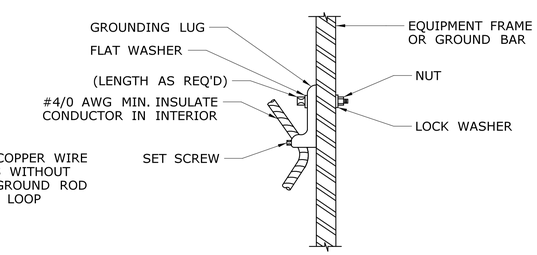

TYP. BONDING CONNECTION TO GROUND BAR OR EQUIPMENT

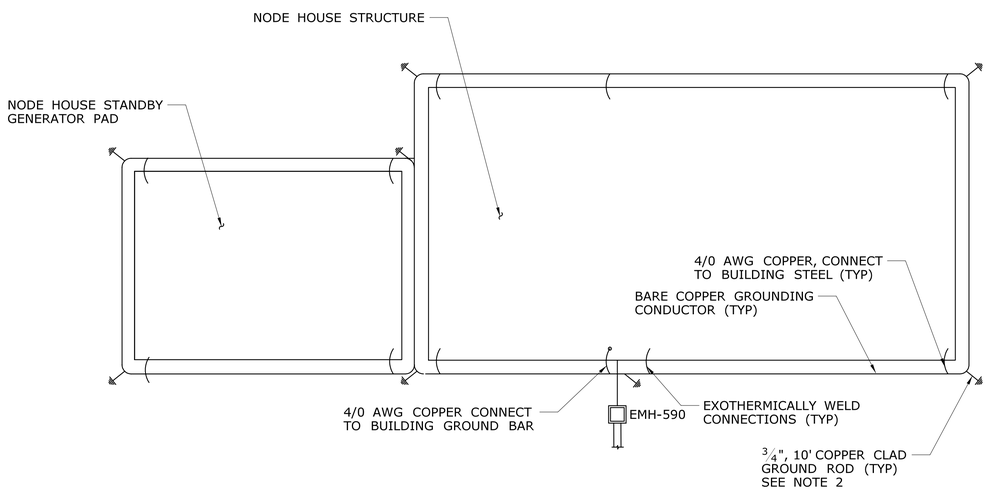

NODE HOUSE AND STANDBY GENERATOR GROUNDING PLAN

NOT TO SCALE

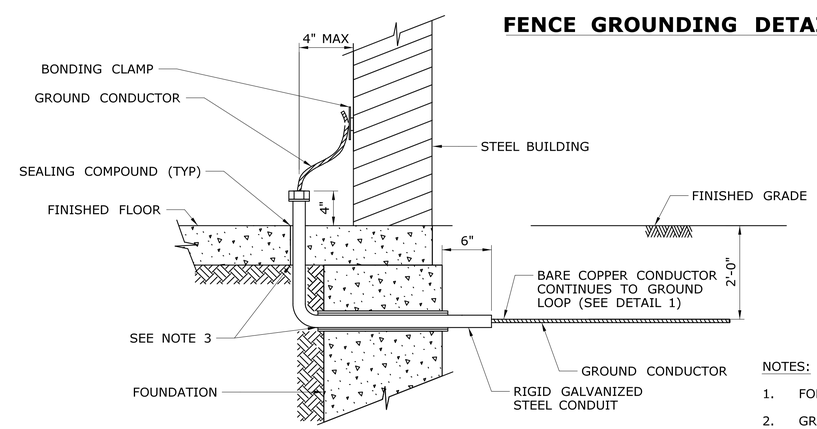

TYP. BELOW GRADE GROUNDING PENETRATIONS

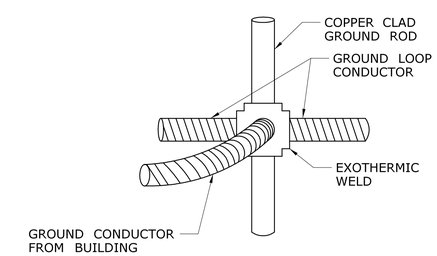

DETAIL 1 / -

NOTES:

1. FOR GENERAL NOTES AND ABBREVIATIONS, SEE DWG. NO. ELE-001.
2. GROUNDING AND BONDING SHALL BE PAID FOR UNDER ITEM "GROUNDING AND BONDING".
3. REFER TO DWG NO. STR-011, FOR FOUNDATION PENETRATION DETAILS.

REV.	DATE	REVISION DESCRIPTION	SHEET NO.

THE INFORMATION, INCLUDING ESTIMATED QUANTITIES OF WORK, SHOWN ON THESE SHEETS IS BASED ON LIMITED INVESTIGATIONS BY THE STATE AND IS IN NO WAY WARRANTED TO INDICATE THE CONDITIONS OF ACTUAL QUANTITIES OF WORK WHICH WILL BE REQUIRED.

Plotted Date: 6/25/2019

DESIGNER/DRAFTER: JH
CHECKED BY: MG
SCALE AS NOTED

STATE OF CONNECTICUT
DEPARTMENT OF TRANSPORTATION

Filename: ...\ELE-006_CNS_SHEET_0300-0202.dgn

SIGNATURE/BLOCK:
GARG CONSULTING SERVICES, INC.
2096A Silas Deane Highway
Rocky Hill, CT 06067
Tel: (860) 563-0582

APPROVED BY: E. CHUANG
DATE: 06/26/2019

STATE OF CONNECTICUT
EUGENE Y. CHUANG
NO. 23258
LICENSED
PROFESSIONAL ENGINEER

PROJECT TITLE:
NETWORK INFRASTRUCTURE UPGRADE FOR SECURITY
NEW HAVEN LINE
PHASE 3

TOWN: STAMFORD TO WESTPORT

DRAWING TITLE:
NODE HOUSE - ELECTRICAL
EMER. GENERATOR PLAN

PROJECT NO. 0300-0202
DRAWING NO. ELE-006
SHEET NO. 06.019

ABBREVIATIONS:

EC, E.C.	=	ELECTRICAL CONTRACTOR
MANU	=	MANUFACTURER

MECHANICAL SYMBOL LEGEND			
SYMBOL	DESCRIPTION	SYMBOL	DESCRIPTION
HP	HEAT PUMP		

PROVIDE DUCT SMOKE DETECTORS FOR AHU UNITS OVER 2000 CFM. SEE MECHANICAL DRAWINGS FOR COORDINATION.

GENERAL NOTES:

1. INSTALLATIONS SHALL COMPLY WITH FEDERAL, STATE AND LOCAL BUILDING CODES.
2. ALL WIRING SHALL COMPLY WITH APPLICABLE SECTIONS OF NATIONAL ELECTRICAL CODE 2017.
3. CONTRACTOR SHALL REFER TO MECHANICAL DRAWINGS FOR EXACT COUNTS OF FLOWS AND TAMPER SWITCHES AND SHALL BE RESPONSIBLE FOR ALL REQUIRED UNITS.
4. NO SMOKE DETECTOR SHALL BE LOCATED WITHIN 3 FEET OF AN AIR SUPPLY OUTLET, REFER TO NFPA 72 FOR MORE GUIDELINES.
5. ALL ENCLOSURES AND CONDUITS SHALL BE PROPERLY GROUNDED IN ACCORDANCE WITH APPLICABLE EDITION OF NATIONAL ELECTRICAL CODES.
6. ALL WIRING SHALL BE IN ELECTRICAL METAL CONDUIT UNLESS OTHERWISE INDICATED ON THE DRAWINGS OR SPECIFICATIONS.
7. INSTALLATION SHALL BE COMPLETED IN A PROFESSIONAL, WORKMANLIKE MANNER.
8. THE DEVICES SHOWN ON THE RISER DO NOT REPRESENT THE ACTUAL COUNT. ELECTRICAL CONTRACTOR SHALL REFER TO ELECTRICAL AND MECHANICAL DRAWINGS FOR EXACT COUNTS OF DEVICES, AND SHALL BE RESPONSIBLE FOR ALL REQUIRED UNITS.
9. PROVIDE MODULE IN THE FACP AS REQUIRED TO ACCOMODATE NEW DEVICES.

REV.	DATE	REVISION DESCRIPTION	SHEET NO.

THE INFORMATION, INCLUDING ESTIMATED QUANTITIES OF WORK, SHOWN ON THESE SHEETS IS BASED ON LIMITED INVESTIGATIONS BY THE STATE AND IS IN NO WAY WARRANTED TO INDICATE THE CONDITIONS OF ACTUAL QUANTITIES OF WORK WHICH WILL BE REQUIRED.

Plotted Date: 6/24/2019

DESIGNER/DRAFTER: JH
CHECKED BY: MG
NOT TO SCALE

STATE OF CONNECTICUT
DEPARTMENT OF TRANSPORTATION

Filename: ...\MEC-001_CNS_SHEET_0300-0202.dgn

SIGNATURE/ BLOCK:
GARG CONSULTING SERVICES, INC.
2096A Silas Deane Highway
Rocky Hill, CT 06067
Tel: (860) 563-0582

APPROVED BY: E. CHUANG DATE: 06/26/2019

STATE OF CONNECTICUT EUGENE Y. CHUANG NO. 23258 LICENSED PROFESSIONAL ENGINEER

PROJECT TITLE:
NETWORK INFRASTRUCTURE UPGRADE FOR SECURITY NEW HAVEN LINE PHASE 3

TOWN: STAMFORD TO WESTPORT

DRAWING TITLE: NODE HOUSE - MECHANICAL LEGEND

PROJECT NO. 0300-0202
DRAWING NO. MEC-001
SHEET NO. 06.020

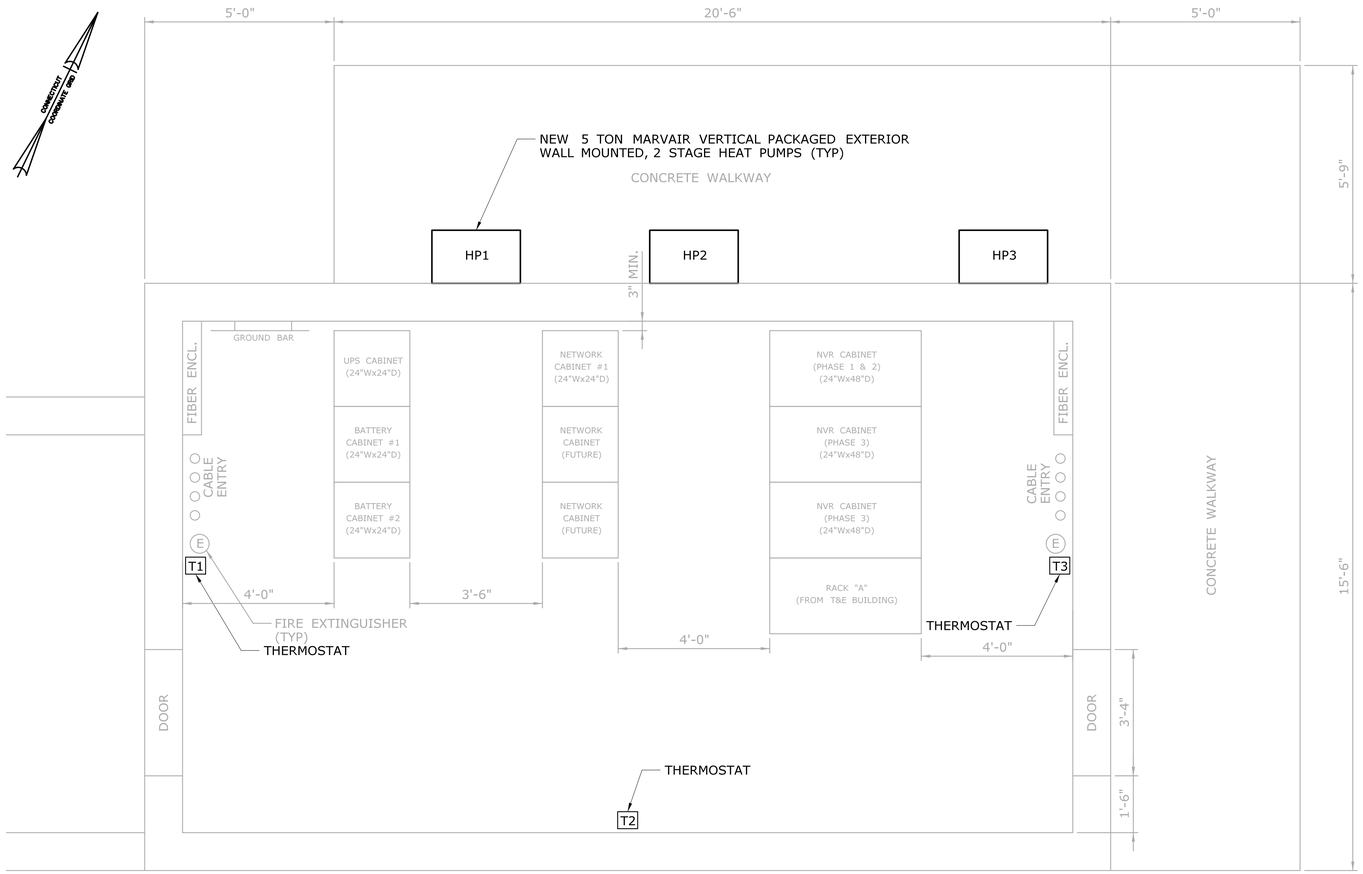

MECHANICAL HVAC PLAN

NOT TO SCALE

WALL MOUNTED HEAT PUMP AIR CONDITIONING UNIT SCHEDULE

SYMBOL	LOCATION	MFG	MODEL #	WEIGHT PER UNIT	TOTAL CAPACITY	SENSIBLE	EAT DB/WB	LAT DB/WB	AMBIENT	SUPPLY CFM	EXT. STAT.	SUPPLY FAN BHP	FILTER	GAS HEAT				ELECTRICAL			O.A.
														INPUT mbh	EAT	LAT	EFF	VOLTAGE	MCA	MOCP	
HP1-3	NODE HSE	MARVAIR	HVPSA60HP1	1,327LBS	59 MBH	56 MBH	78.6/66.6	57.8/56.7	95	-	1"	-	30%	-	-	-	-	208-3-60	33	45	200 CFM

OPTIONS:
1. PREMIUM EFFICIENCY MOTOR
2. 5 YEAR COMPRESSOR WARRANTEE
3. 2 STAGE HEAT PUMP
4. BUILT IN CONVENIENCE GFCI OUTLET WITH SMOKE DETECTOR IN EACH UNIT RETURN.
5. FUSED DISCONNECT SWITCH
6. PROVIDE START-UP AND PROGRAMMING WITH HARDWIRED THERMOSTATS FOR EACH UNIT, SETPOINT 72 DEGREE F (WINTER) 75 DEGREE F (SUMMER) DB 50% RH SUMMER AND WINTER, 1 ACH OR AS RECOMMENDED BY THE UPS, NETWORK AND NVR BY THE EQUIPMENT MANUFACTURER.
7. PROVICE CLASS 1A FAST ACTION DAMPERS IN HEAT PUMPS ON BOTH SUPPLY AIR AND RETURN AIRWALL GRILLS INTERLOCKED WITH THE AGENT CONTROLLER TO CLOSE UPON DELAYED ACTIVATION OF A CLEAN AGENT RELEASE. DAMPERS SHOULD OPERATE WITH SPRING RETURN TO FAIL CLOSED WITH POWER FAILURE.
8. PROVIDE PROGRAMMABLE T-STAT: HONEYWELL VISION PRO 8000, MODEL: TH8110R1008, 7 DAY PROGRAMMABLE OR APPROVED EQUAL FOR EACH HP UNIT.

NOTES:

1. FOR GENERAL NOTES AND ABBREVIATIONS, SEE DWG. NOS. ELE-001 & MEC-001.
2. MANU/MODEL LISTED ARE ONLY USED AS THE BASIS FOR DESIGN. REFER TO SPECIFICATION FOR LIST OF ACCEPTABLE MANU/MODELS.

REV.	DATE	REVISION DESCRIPTION	SHEET NO.

THE INFORMATION, INCLUDING ESTIMATED QUANTITIES OF WORK, SHOWN ON THESE SHEETS IS BASED ON LIMITED INVESTIGATIONS BY THE STATE AND IS IN NO WAY WARRANTED TO INDICATE THE CONDITIONS OF ACTUAL QUANTITIES OF WORK WHICH WILL BE REQUIRED.

Plotted Date: 7/2/2019

DESIGNER/DRAFTER: JH
CHECKED BY: MG
SCALE AS NOTED

STATE OF CONNECTICUT
DEPARTMENT OF TRANSPORTATION

Filename: ...\MEC-002_CNS_SHEET_0300-0202.dgn

SIGNATURE/BLOCK:
GARG CONSULTING SERVICES, INC.
2096A Silas Deane Highway
Rocky Hill, CT 06067
Tel: (860) 563-0582

APPROVED BY: E. CHUANG
DATE: 06/26/2019

STATE OF CONNECTICUT EUGENE Y. CHUANG NO. 23258 LICENSED PROFESSIONAL ENGINEER

PROJECT TITLE:
NETWORK INFRASTRUCTURE UPGRADE FOR SECURITY NEW HAVEN LINE PHASE 3

TOWN:
STAMFORD TO WESTPORT

DRAWING TITLE:
NODE HOUSE - MECHANICAL HVAC PLAN

PROJECT NO. 0300-0202
DRAWING NO. MEC-002
SHEET NO. 06.021

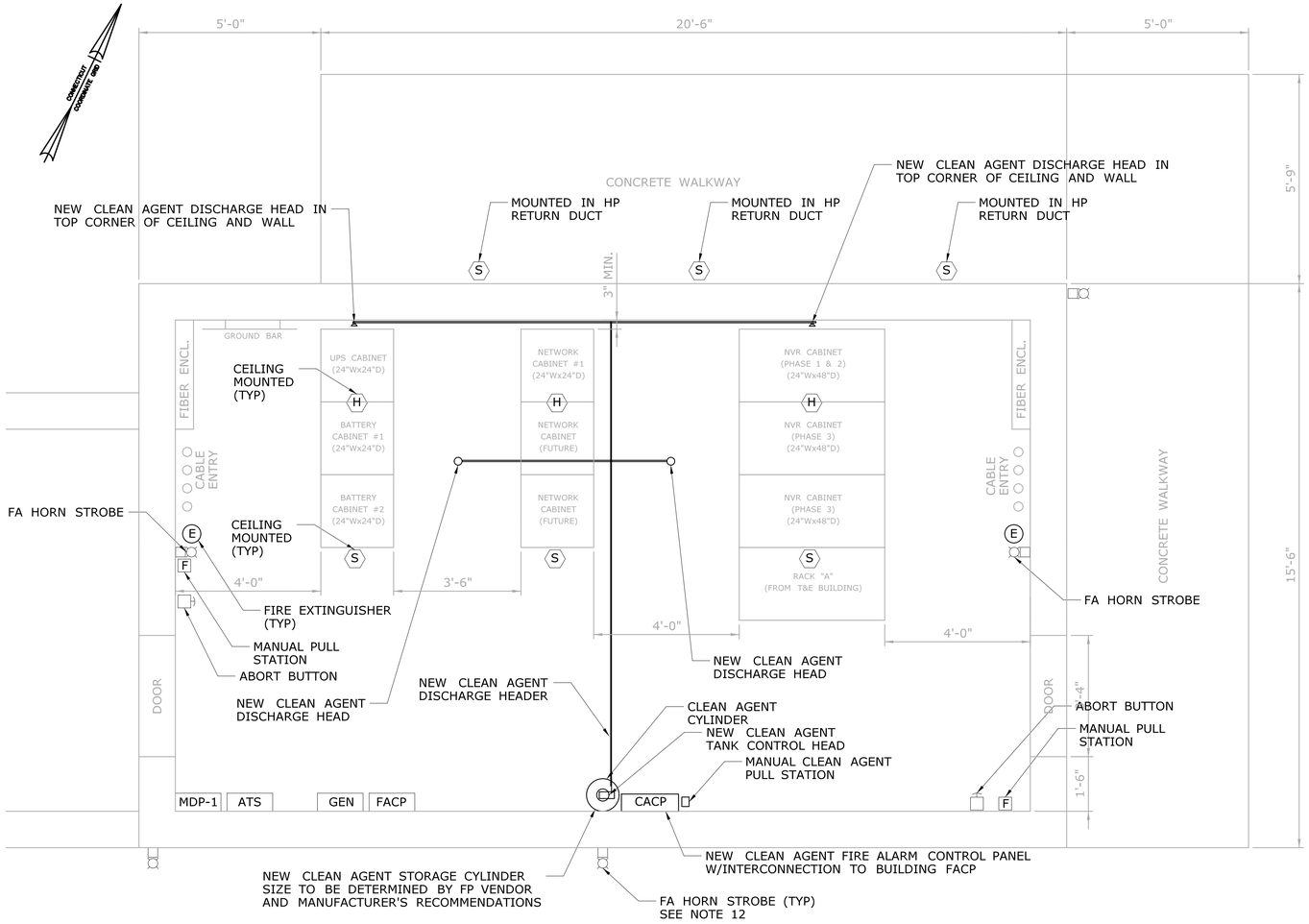

FIRE ALARM/FIRE PROTECTION PLAN

NOT TO SCALE

NOTES:

CARPENTRY CONTRACTOR WILL PROVIDE FOR THE SEALING OF THE DATA CENTER ENVELOPE, INCLUDING ALL WALLS AND DOORS. THE CARPENTRY CONTRACTOR WILL COORDINATE WITH THE FIRE PROTECTION CONTRACTOR TO MEET SEALING REQUIREMENTS NECESSARY FOR MAINTAINING THE CODE REQUIRED CLEAN AGENT FIRE PROTECTION PRESSURE.

FP CONTRACTOR TO PROVIDE CODE SIGNAGE FOR THE HAZARD AREA INSIDE AND OUT.

CLEAN AGENT FIRE ALARM SYSTEM SHALL CONFORM TO NFPA FM200 OR APPROVED EQUAL.

FP CONTRACTOR TO PROVIDE INTERLOCK WITH CLASS IA FAST ACTION DAMPERS ON BOTH SUPPLY AIR AND RETURN AIR WALL GRILLS, WITH THE CLEAN AGENT CONTROLLER, UPON DELAYED ACTIVATION OF A CLEAN AGENT RELEASE.

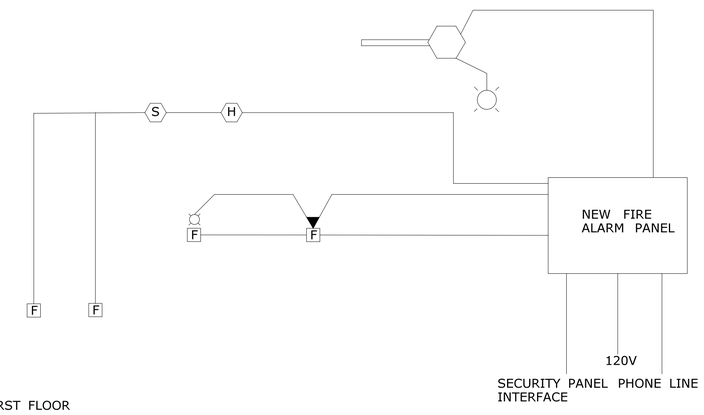

FIRE ALARM RISER DIAGRAM

NOT TO SCALE

PROVIDE DUCT SMOKE DETECTORS FOR AHU UNITS OVER 2000 CFM. SEE MECHANICAL DRAWINGS FOR COORDINATION.

GENERAL FIRE ALARM NOTES:

1. INSTALLATIONS SHALL COMPLY WITH FEDERAL, STATE AND LOCAL BUILDING CODES.
2. ALL WIRING SHALL COMPLY WITH APPLICABLE SECTIONS OF NATIONAL ELECTRICAL CODE 2017.
3. CONTRACTOR SHALL REFER TO MECHNICAL DRAWINGS FOR EXACT COUNTS OF FLOWS AND TAMPER SWITCHES AND SHALL BE RESPONSIBLE FOR ALL REQUIRED UNITS.
4. NO SMOKE DETECTOR SHALL BE LOCATED WITHIN 3 FEET OF AN AIR SUPPLY OUTLET, REFER TO NFPA 72 FOR MORE GUIDELINES.
5. NO PARALLEL BRANCHING OF "T" SPLICES ARE PERMITTED ON SIGNALING CIRCUITS.
6. ALL ENCLOSURES AND CONDUITS SHALL BE PROPERLY GROUNDED IN ACCORDANCE WITH APPLICABLE EDITION OF NATIONAL ELECTRICAL CODES.
7. ALL WIRING SHALL BE IN ELECTRICAL METAL CONDUIT UNLESS OTHERWISE INDICATED ON THE DRAWINGS OR SPECIFICATIONS.
8. INSTALLATION SHALL BE COMPLETED IN A PROFESSIONAL, WORKMANLIKE MANNER.
9. THE DEVICES SHOWN ON THE RISER DO NOT REPRESENT THE ACTUAL COUNT. ELECTRICAL CONTRACTOR SHALL REFER TO ELECTRICAL AND MECHANICAL DRAWINGS FOR EXACT COUNTS OF DEVICES, AND SHALL BE RESPONSIBLE FOR ALL REQUIRED UNITS.
10. PROVIDE MODULE IN THE FACP AS REQUIRED TO ACCOMODATE NEW DEVICES.
11. PROVIDE WIRELESS PHONE DIALER, FOR FACP NOTIFICATION TO NORWALK FD AND METRO NORTH RAILROAD TO REPORT ALARM, TROUBLE AND SUPERVISORY STATUS OF FACP.
12. FA HORN STROBE TO BE MOUNTED 8' ABOVE FINISHED FLOOR LEVEL.

NOTES:

1. FOR ABBREVIATIONS, SEE DWG. NO. ELE-001.
2. FOR DEVICE MOUNTING HEIGHTS, SEE DWG. NO. ELE-001.
3. FOR PANEL DETAILS, SEE DWG. NO. ELE-005.
4. FOR NETWORK CABINET & NVR CABINET DETAILS, SEE DWG NOS. FCI-650 AND FCI-652.

REV.	DATE	REVISION DESCRIPTION	SHEET NO.

THE INFORMATION, INCLUDING ESTIMATED QUANTITIES OF WORK, SHOWN ON THESE SHEETS IS BASED ON LIMITED INVESTIGATIONS BY THE STATE AND IS IN NO WAY WARRANTED TO INDICATE THE CONDITIONS OF ACTUAL QUANTITIES OF WORK WHICH WILL BE REQUIRED.

Plotted Date: 7/2/2019

DESIGNER/DRAFTER: JH

CHECKED BY: MG

SCALE AS NOTED

STATE OF CONNECTICUT
DEPARTMENT OF TRANSPORTATION

Filename: ...\FPR-001_CNS_SHEET_0300-0202.dgn

SIGNATURE/BLOCK:
GARG CONSULTING SERVICES, INC.
2096A Silas Deane Highway
Rocky Hill, CT 06067
Tel: (860) 563-0582

APPROVED BY: E. CHUANG
DATE: 06/26/2019

STATE OF CONNECTICUT EUGENE Y. CHUANG NO. 23258 LICENSED PROFESSIONAL ENGINEER

PROJECT TITLE:
NETWORK INFRASTRUCTURE UPGRADE FOR SECURITY NEW HAVEN LINE PHASE 3

TOWN: **STAMFORD TO WESTPORT**

DRAWING TITLE: **NODE HOUSE - FIRE ALARM/ FIRE PROTECTION PLAN**

PROJECT NO. 0300-0202

DRAWING NO. FPR-001

SHEET NO. 06.022