SUBSET 05 - CABLE AND ATTACHMENT DETAILS
INDEX OF DRAWINGS

DRAWING NUMBER	DRAWING TITLE	DRAWING NUMBER	
FCI-701	FIGURE 8 CABLE DETAILS, TENSION AND SAGS		
FCI-702	FIGURE 8 CABLE INSTALLATION TENSIONS		
FCI-710	ATTACHMENT DETAILS		
FCI-711	COUNDUIT ATTACHMENTS		
FCI-712	CABLE CROSSOVER ATTACHMENTS		
FCI-720	ASSEMBLY DETAILS SHEET 1 OF 2		
FCI-721	ASSEMBLY DETAILS SHEET 2 OF 2		
FCI-722	CONDUIT ASSEMBLY DETAILS		
FCI-723	CABLE CROSSOVER ASSEMBLY DETAILS		
FCI-724	GROUNDING DETAILS		

DESIGNED BY:
STV INCORPORATED
185 PLAINS ROAD, SUITE 208E
MILFORD, CT 06461

STV Incorporated
185 Plains Road
Suite 208E
Milford, CT 06461

Jim Sherwonit
2019.06.25
12:02:17-04'00'

REV.	DATE	REVISION DESCRIPTION	SHEET NO.

THE INFORMATION, INCLUDING ESTIMATED QUANTITIES OF WORK, SHOWN ON THESE SHEETS IS BASED ON LIMITED INVESTIGATIONS BY THE STATE AND IS IN NO WAY WARRANTED TO INDICATE THE CONDITIONS OF ACTUAL QUANTITIES OF WORK WHICH WILL BE REQUIRED.

Plotted Date: 6/11/2019

DESIGNER/DRAFTER: MC
CHECKED BY: TC
NOT TO SCALE

STATE OF CONNECTICUT
DEPARTMENT OF TRANSPORTATION

Filename: ...\IN-005_CNS_SHEET_0300-0202.dgn

SIGNATURE/BLOCK:
STV Incorporated
185 Plains Road
Suite 208E
Milford, CT 06461

PROJECT TITLE:
NETWORK INFRASTRUCTURE UPGRADE FOR SECURITY
NEW HAVEN LINE
PHASE 3

TOWN: STAMFORD TO WESTPORT

DRAWING TITLE: CABLE AND ATTACHMENT DETAILS
INDEX OF DRAWINGS

PROJECT NO. 0300-0202
DRAWING NO. IN-005
SHEET NO. 05.01

AERIAL DUCT AND MESSENGER STRAND PROPERTIES

DESIGN ITEM	UNITS	MESSENGER	FIGURE 8 AERIAL DUCT (NOTE 1)
WIRE/ CABLE CHARACTERISTICS	-	1/4" / 7-STRAND	
MATERIAL	-	STEEL (EHS) (GALV.)	
DIAMETER (EQUIVALENT DIAMETER)	IN	0.25	(2.096)
CROSS-SECTIONAL AREA	IN^2	0.035	
WEIGHT	LB/FT	0.121	0.417
RADIAL THICKNESS OF ICE	IN	0.5	
WEIGHT OF ICE	LB/FT	1.614	
TOTAL CABLE WEIGHT WITH ICE	LB/FT	2.031	
BREAKING LOAD	LB	6650	
MODULUS OF ELASTICITY	PSI	29×10^{6}	
COEFFICIENT OF EXPANSION	/ ºF	6.5×10^{-6}	

BLOWOFF TABLE (FT)

SPAN SEGMENT	LOAD CONDITION	
	55 MPH WIND @ 60ºF	40 MPH WIND, 1/2" ICE @ 0ºF
CAT 578D TO CAT 578E (NORTH SIDE)	2.25	1.15
CAT 578E TO CAT 579 (NORTH SIDE)	2.51	1.28
CAT 578D TO CAT 578E (SOUTH SIDE)	2.36	1.21
CAT 578E TO CAT 579 (SOUTH SIDE) (24 STRAND SMFO)	2.68	1.37
CAT 578E TO CAT 579 (SOUTH SIDE) (2 CAT5E)	2.54	1.30

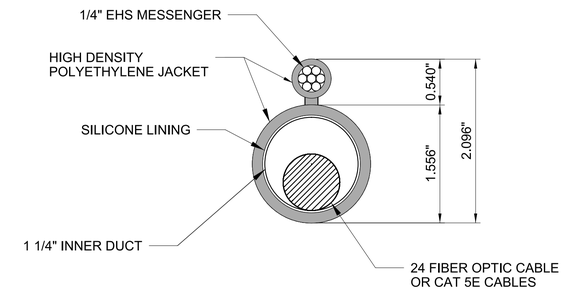

1 1/4" FIGURE 8 AERIAL DUCT WITH 1/4" MESSENGER STRAND

AERIAL DUCT DESIGN SAGS AND TENSIONS CAT 578D TO CAT 579 (NORTH SIDE)

SPAN SEGMENT	RULING SPAN LENGTH (FT)	LOAD CONDITION	TENSION (LBS)	SAG (FT)	
				578D-578E	578E-579
CAT 578D TO CAT 578E TO CAT 579 (NORTH SIDE)	110	NO WIND @ 60ºF	400	1.88	2.42
		55 MPH WIND, 1/2" ICE @ 0ºF	1422	2.19	2.46
		40 MPH WIND, 1/2" ICE @ 0ºF	1315	2.36	2.66
		55 MPH WIND @ 60ºF	859	0.88	1.13
		90 MPH WIND @ 60ºF	1713	0.44	0.56
		NO WIND, NO ICE @ -15ºF	506	1.49	1.91
		NO WIND @ 120ºF	347	2.17	2.79
		NO WIND, 1/2" ICE @ 32ºF	1209	2.57	2.89
		SPAN LENGTHS (FT)		108	113

AERIAL DUCT DESIGN SAGS AND TENSIONS CAT 578D TO CAT 579 (SOUTH SIDE)

SPAN SEGMENT	RULING SPAN LENGTH (FT)	LOAD CONDITION	TENSION (LBS)	SAG (FT)	
				578D-578E	578E-579
CAT 578D TO CAT 578E TO CAT 579 (SOUTH SIDE)	111	NO WIND @ 60ºF	325	2.05	2.33
		55 MPH WIND, 1/2" ICE @ 0ºF	1361	2.19	2.48
		40 MPH WIND, 1/2" ICE @ 0ºF	1249	2.38	2.71
		55 MPH WIND @ 60ºF	820	0.81	0.92
		90 MPH WIND @ 60ºF	1684	0.40	0.45
		NO WIND, NO ICE @ -15ºF	411	1.62	1.84
		NO WIND @ 120ºF	282	2.36	2.68
		NO WIND, 1/2" ICE @ 32ºF	1144	2.60	2.95
		SPAN LENGTHS (FT)		107	114

AERIAL DUCT DESIGN SAGS AND TENSIONS CAT 578E TO CAT 579 (SOUTH SIDE)

SPAN SEGMENT	RULING SPAN LENGTH (FT)	LOAD CONDITION	TENSION (LBS)	SAG (FT)
				578E-579
CAT 578E TO CAT 579 (SOUTH SIDE)	114	NO WIND @ 60ºF	375	2.24
		55 MPH WIND, 1/2" ICE @ 0ºF	1427	2.43
		40 MPH WIND, 1/2" ICE @ 0ºF	1317	2.63
		55 MPH WIND @ 60ºF	864	0.97
		90 MPH WIND @ 60ºF	1743	0.48
		NO WIND, NO ICE @ -15ºF	474	1.77
		NO WIND @ 120ºF	325	2.58
		NO WIND, 1/2" ICE @ 32ºF	1209	2.86
		SPAN LENGTHS (FT)		114

NOTES:

1. CONSISTS OF ENTIRE SELF-SUPPORTING FIGURE 8 SYSTEM, WHICH INCLUDES THE MESSENGER STRAND AND 1 1/4" DUCT.
2. A UNIFORM WEIGHT OF 0.049 LB/FT IS ASSUMED FOR 24 FIBER OPTIC CABLE AND A UNIFORM WEIGHT OF 0.050 LB/FT IS ASSUMED FOR EACH CAT 5E CABLE. SEE DRAWING FCI-515 FOR NUMBER AND TYPE OF CABLE WITHIN AERIAL DUCT.

REV.	DATE	REVISION DESCRIPTION	SHEET NO.

THE INFORMATION, INCLUDING ESTIMATED QUANTITIES OF WORK, SHOWN ON THESE SHEETS IS BASED ON LIMITED INVESTIGATIONS BY THE STATE AND IS IN NO WAY WARRANTED TO INDICATE THE CONDITIONS OF ACTUAL QUANTITIES OF WORK WHICH WILL BE REQUIRED.

Plotted Date: 6/11/2019

DESIGNER/DRAFTER: BD
CHECKED BY: BC
NOT TO SCALE

STATE OF CONNECTICUT
DEPARTMENT OF TRANSPORTATION

Filename: ...\FCI-701_CNS_Sheet_0300-0202.dgn

SIGNATURE/ BLOCK:

STV Incorporated
185 Plains Road
Suite 208E
Milford, CT 06461

PROJECT TITLE:
NETWORK INFRASTRUCTURE UPGRADE FOR SECURITY NEW HAVEN LINE PHASE 3

TOWN: STAMFORD TO WESTPORT

DRAWING TITLE: FIGURE 8 CABLE DETAILS, TENSION AND SAGS

PROJECT NO. 300-0202
DRAWING NO. FCI-701
SHEET NO. 05.02

AERIAL DUCT INSTALLATION TENSIONS CAT 578D TO CAT 579 (NORTH SIDE)

SPAN SEGMENT	RULING SPAN LENGTH (FT)	TEMPERATURE (ºF)	TENSION (LBS)
CAT 578D TO CAT 578E TO CAT 579 (NORTH SIDE)	110	-10	395
		0	379
		10	364
		20	351
		30	338
		40	327
		50	317
		60	307
		70	298
		80	290
		90	282
		100	275
		110	268
		120	262

AERIAL DUCT INSTALLATION TENSIONS CAT 578D TO CAT 579 (SOUTH SIDE)

SPAN SEGMENT	RULING SPAN LENGTH (FT)	TEMPERATURE (ºF)	TENSION (LBS)
CAT 578D TO CAT 578E TO CAT 579 (SOUTH SIDE)	111	-10	368
		0	354
		10	342
		20	331
		30	320
		40	310
		50	301
		60	293
		70	285
		80	278
		90	271
		100	265
		110	259
		120	253

AERIAL DUCT INSTALLATION TENSIONS CAT 578E TO CAT 579 (SOUTH SIDE)

SPAN SEGMENT	RULING SPAN LENGTH (FT)	TEMPERATURE (ºF)	TENSION (LBS)
CAT 578E TO CAT 579 (SOUTH SIDE)	114	-10	394
		0	378
		10	365
		20	352
		30	340
		40	329
		50	319
		60	310
		70	301
		80	293
		90	286
		100	279
		110	273
		120	266

NOTES:

1. MESSENGER INSTALLATION TENSIONS ARE BASED ON NO ICE AND NO WIND CLIMATIC CONDITIONS, AND DO NOT INCLUDE THE WEIGHT OF THE FIBER OPTIC CABLE OR CAT 5E CABLES DURING ERECTION.
2. RULING SPAN IS DETERMINED BY THE FOLLOWING FORMULA:

$$\sqrt{\frac{L_1^3 + L_2^3 + L_3^3 + \ldots\ldots + L_N^3}{L_1 + L_2 + L_3 + \ldots\ldots + L_N}}$$

   WHERE L_1, L_2, L_3, ...L_N ARE THE LENGTHS OF THE SPANS BETWEEN DEADENDS (MESSENGER STRAND TERMINATIONS).
3. FOR INTERMEDIATE TEMPERATURES BETWEEN THOSE INDICATED IN THE TABLES, THE TENSION VALUES CAN BE INTERPOLATED ON A STRAIGHT LINE BASIS.

REV.	DATE	REVISION DESCRIPTION	SHEET NO.

THE INFORMATION, INCLUDING ESTIMATED QUANTITIES OF WORK, SHOWN ON THESE SHEETS IS BASED ON LIMITED INVESTIGATIONS BY THE STATE AND IS IN NO WAY WARRANTED TO INDICATE THE CONDITIONS OF ACTUAL QUANTITIES OF WORK WHICH WILL BE REQUIRED.

Plotted Date: 6/11/2019

DESIGNER/DRAFTER: BD
CHECKED BY: BC
NOT TO SCALE

STATE OF CONNECTICUT
DEPARTMENT OF TRANSPORTATION

Filename: ..\FCI-702_CNS_Sheet_0300-0202.dgn

SIGNATURE/ BLOCK:

STV Incorporated
185 Plains Road
Suite 208E
Milford, CT 06461

PROJECT TITLE:
NETWORK INFRASTRUCTURE UPGRADE FOR SECURITY NEW HAVEN LINE PHASE 3

TOWN: STAMFORD TO WESTPORT

DRAWING TITLE: FIGURE 8 CABLE INSTALLATION TENSIONS

PROJECT NO. 300-0202
DRAWING NO. FCI-702
SHEET NO. 05.03

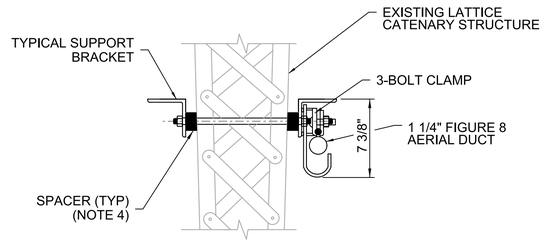

SECTION 1 -

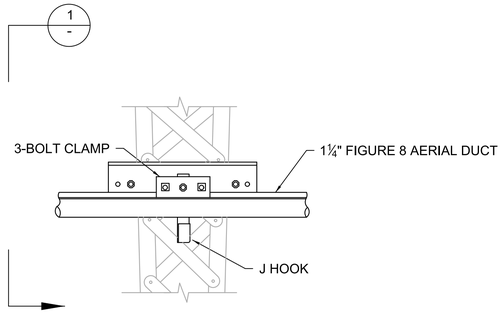

ELEVATION

TYPE B-1
TYPICAL LATTICE STRUCTURE
(SEE ASSEMBLY DETAILS ON DWG # FCI-720)

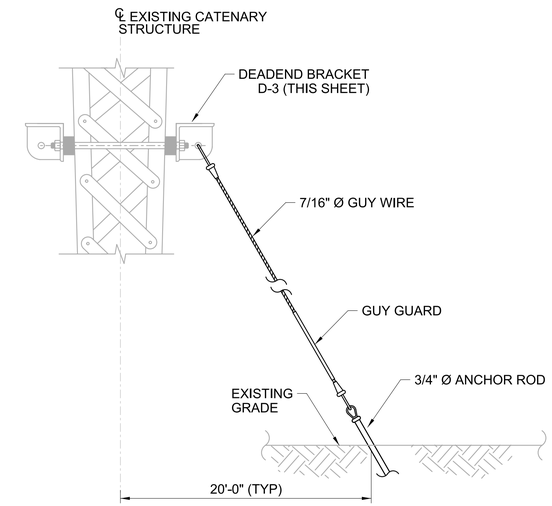

TYPE D-8
GUY DEAD END
(SEE ASSEMBLY DETAILS ON FCI-721)

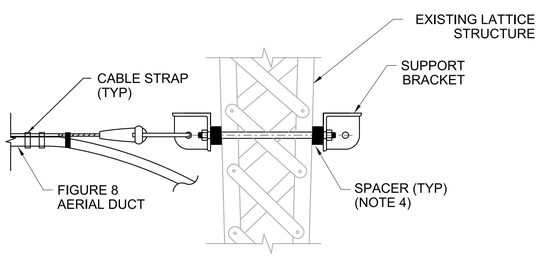

ELEVATION

TYPE D-3
DEAD END BRACKET
(SEE ASSEMBLY DETAILS ON DWG # FCI-721)

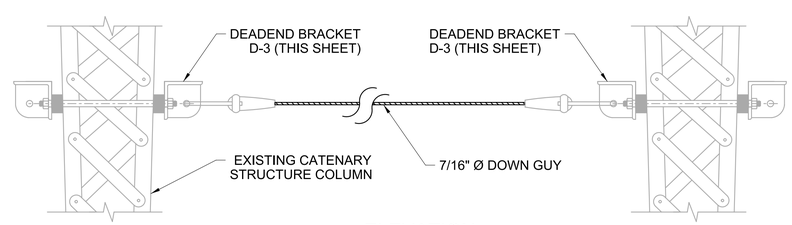

ELEVATION

TYPE D-3B
AERIAL GUY
(SEE ASSEMBLY DETAILS ON DWG # FCI-721)

NOTES:

1. FOR GENERAL NOTES SEE DWG. G-002.
2. FOR ABBREVIATIONS AND LEGEND SEE DWG. G-003.
3. THE FIGURE 8 AERIAL DUCT SHALL HAVE A MINIMUM 12" CLEARANCE FROM ANY EXISTING COMMUNICATION CABLES.
4. SPACERS SHALL BE WELDED TO SUPPORT BRACKETS AS REQUIRED TO ALLOW FOR PROPER FIT ON RIVETED LATTICE STRUCTURES. SEE SPACER DETAIL ON DWG # FCI-720. IN ADDITION, ALL WELDED AREAS SHALL BE TREATED WITH TOUCH-UP COLD GALVANIZING COMPOUND.

REV.	DATE	REVISION DESCRIPTION	SHEET NO.

THE INFORMATION, INCLUDING ESTIMATED QUANTITIES OF WORK, SHOWN ON THESE SHEETS IS BASED ON LIMITED INVESTIGATIONS BY THE STATE AND IS IN NO WAY WARRANTED TO INDICATE THE CONDITIONS OF ACTUAL QUANTITIES OF WORK WHICH WILL BE REQUIRED.

Plotted Date: 6/11/2019

DESIGNER/DRAFTER: BD
CHECKED BY: BC
NOT TO SCALE

STATE OF CONNECTICUT
DEPARTMENT OF TRANSPORTATION

Filename: ...\FCI-710_CNS_Sheet_0300-0202.dgn

SIGNATURE/BLOCK:

STV Incorporated
185 Plains Road
Suite 208E
Milford, CT 06461

PROJECT TITLE:
NETWORK INFRASTRUCTURE UPGRADE FOR SECURITY
NEW HAVEN LINE
PHASE 3

TOWN: STAMFORD TO WESTPORT

DRAWING TITLE: ATTACHMENT DETAILS

PROJECT NO. 300-0202
DRAWING NO. FCI-710
SHEET NO. 05.04

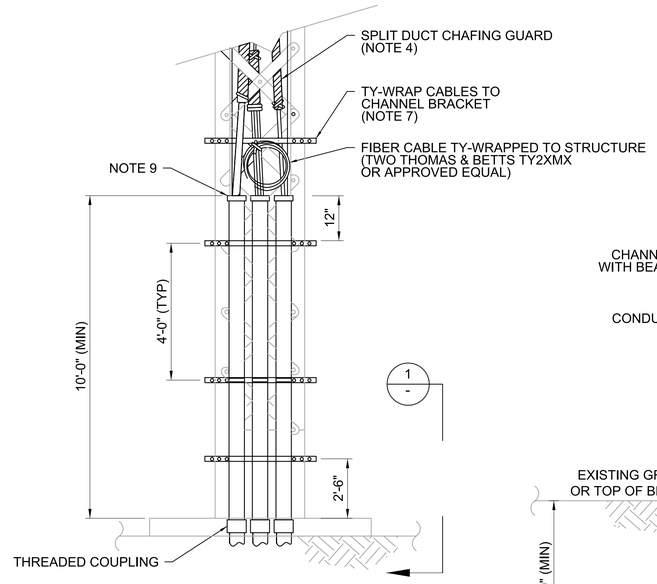

TYPE C-1
TYPICAL LATTICE STRUCTURE
(SEE ASSEMBLY DETAILS ON DWG # FCI-722)

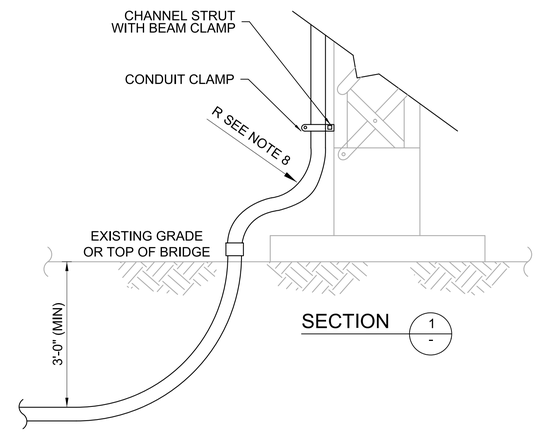

SECTION 1 -

NOTES:

1. FOR GENERAL NOTES SEE DWG. G-002.
2. FOR ABBREVIATIONS AND LEGEND SEE DWG. G-003.
3. NUMBER OF CONDUITS, THEIR SIZE, AND MATERIAL ARE SPECIFIED IN CABLE ROUTING PLANS.
4. CONTRACTOR SHALL FURNISH AND INSTALL SPLIT DUCT CHAFING GUARDS AROUND ALL CABLES THAT COME IN CONTACT WITH STRUCTURE AND SECURE WITH TY-WRAPS AT EACH END AND IN THE CENTER IF THE DISTANCE BETWEEN TY WRAPS EXCEEDS 12".
5. ATTACHMENT OF BEAM CLAMPS TO LEG, FLANGE, OR DIAGONAL BRACING OF EXISTING CATENARY STRUCTURES IS PERMITTED.
6. CONTRACTOR SHALL FIELD VERIFY/CUT LENGTHS OF STRUT CHANNEL TO SITE SPECIFIC REQUIREMENTS AND PROTECT AS SPECIFIED.
7. STRUT CHANNEL USED FOR SUPPORT OF CABLES SHALL BE INSTALLED 12" ABOVE TOP OF CONDUIT AND 24" THERE AFTER AS REQUIRED.
8. SEE CABLE SPECIFICATIONS FOR MINIMUM BENDING RADIUS.
9. ALL CONDUITS SHALL BE SEALED WITH A PLUG AT OPENINGS.
10. WIDTH OF CONDUIT SUPPORT BRACKET SHALL NOT EXTEND 4" PAST EDGE OF STRUCTURE. STACK CONDUITS AS REQUIRED.
11. ALL MOUNTING HARDWARE FOR PVC COATED CONDUIT SHALL BE STAINLESS STEEL.

REV.	DATE	REVISION DESCRIPTION	SHEET NO.

THE INFORMATION, INCLUDING ESTIMATED QUANTITIES OF WORK, SHOWN ON THESE SHEETS IS BASED ON LIMITED INVESTIGATIONS BY THE STATE AND IS IN NO WAY WARRANTED TO INDICATE THE CONDITIONS OF ACTUAL QUANTITIES OF WORK WHICH WILL BE REQUIRED.

Plotted Date: 6/11/2019

DESIGNER/DRAFTER: BD
CHECKED BY: BC
NOT TO SCALE

STATE OF CONNECTICUT
DEPARTMENT OF TRANSPORTATION

Filename: ...\FCI-711_CNS_Sheet_0300-0202.dgn

SIGNATURE/BLOCK:

STV Incorporated
185 Plains Road
Suite 208E
Milford, CT 06461

PROJECT TITLE:
NETWORK INFRASTRUCTURE UPGRADE FOR SECURITY NEW HAVEN LINE PHASE 3

TOWN: STAMFORD TO WESTPORT

DRAWING TITLE: CONDUIT ATTACHMENTS

PROJECT NO. 300-0202
DRAWING NO. FCI-711
SHEET NO. 05.05

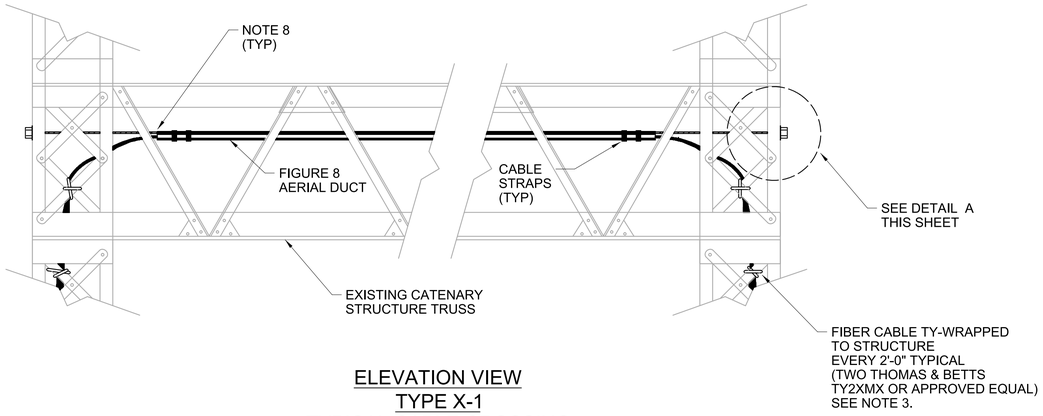

ELEVATION VIEW
TYPE X-1
TYPICAL CABLE CROSSING
(SEE ASSEMBLY DETAILS ON DWG # FCI-723)

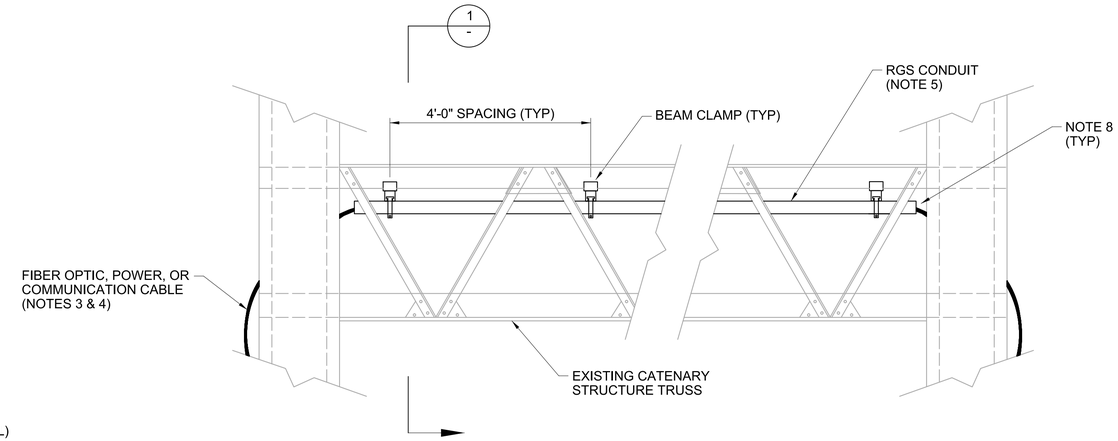

ELEVATION VIEW
TYPE X-2
CABLE CROSSING
(SEE ASSEMBLY DETAILS ON DWG # FCI-723)

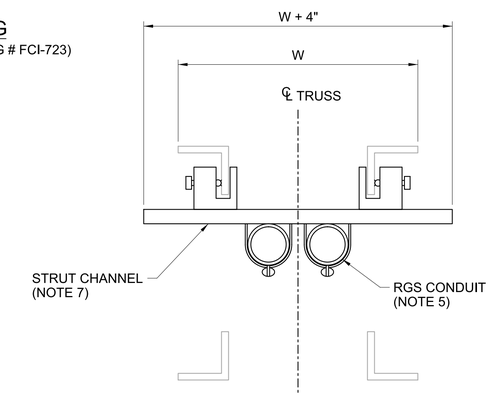

SECTION 1 -

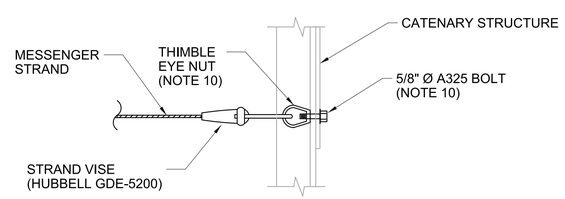

DETAIL A -

NOTES:

1. FOR GENERAL NOTES SEE DWG. G-002.
2. FOR ABBREVIATIONS AND LEGEND SEE DWG. G-003.
3. CONTRACTOR SHALL INSTALL SPLIT DUCT CHAFING GUARDS AROUND ALL CABLES THAT COME IN CONTACT WITH THE STRUCTURE, AND SECURE WITH TY-WRAPS AT EACH END AND IN THE CENTER IF THE DISTANCE BETWEEN WRAPS EXCEED 12".
4. SEE CABLE SPECIFICATIONS FOR MINIMUM BENDING RADIUS.
5. NUMBER OF CONDUITS AND THEIR SIZE ARE SPECIFIED IN CABLE ROUTING PLANS.
6. ATTACHMENT OF BEAM CLAMPS TO LEG, FLANGE, OR DIAGONAL BRACING OF EXISTING CATENARY STRUCTURES IS PERMITTED.
7. CONTRACTOR SHALL FIELD VERIFY/CUT LENGTHS OF STRUT CHANNEL TO SITE SPECIFIC REQUIREMENTS AND PROTECT AS SPECIFIED.
8. CONTRACTOR SHALL INSTALL SPLIT DUCT PLUGS AT EVERY OPENING OF FIGURE 8 AERIAL DUCT OR RGS CONDUIT.
9. ATTACHMENT OF TYPE X-2 ASSEMBLY TO THE BOTTOM TRUSS CORD OF THE SUPPORTING STRUCTURE IS ALSO PERMITTED.
10. ALL HARDWARE SHALL BE FABRICATED TO CONTRACT SPECIFICATIONS.

REV.	DATE	REVISION DESCRIPTION	SHEET NO.

THE INFORMATION, INCLUDING ESTIMATED QUANTITIES OF WORK, SHOWN ON THESE SHEETS IS BASED ON LIMITED INVESTIGATIONS BY THE STATE AND IS IN NO WAY WARRANTED TO INDICATE THE CONDITIONS OF ACTUAL QUANTITIES OF WORK WHICH WILL BE REQUIRED.

Plotted Date: 6/11/2019

DESIGNER/DRAFTER: BD
CHECKED BY: BC
NOT TO SCALE

STATE OF CONNECTICUT
DEPARTMENT OF TRANSPORTATION

Filename: ...\FCI-712_CNS_Sheet_0300-0202.dgn

SIGNATURE/BLOCK:
STV Incorporated
185 Plains Road
Suite 208E
Milford, CT 06461

PROJECT TITLE:
NETWORK INFRASTRUCTURE UPGRADE FOR SECURITY
NEW HAVEN LINE
PHASE 3

TOWN: STAMFORD TO WESTPORT

DRAWING TITLE: CABLE CROSSOVER ATTACHMENTS

PROJECT NO. 300-0202
DRAWING NO. FCI-712
SHEET NO. 05.06

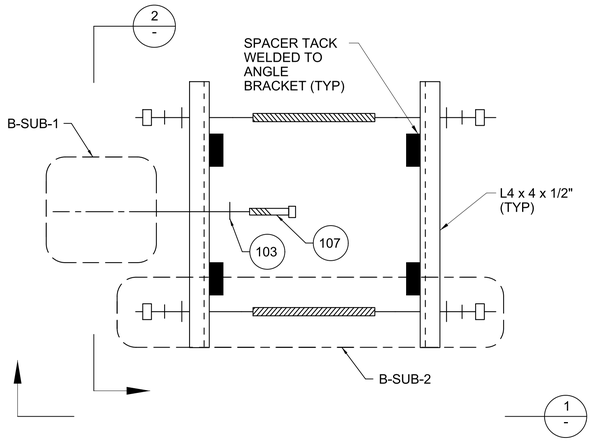

PLAN

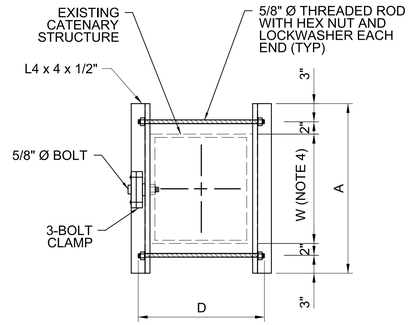

SUPPORT BRACKET			
TYPE	W	A	D
LA	24"	34"	31"

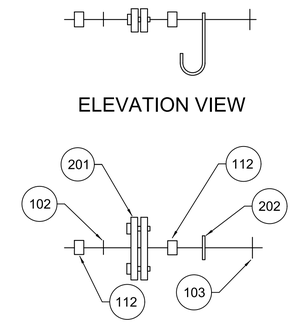

DETAIL B-SUB-1
TYPICAL 3-BOLT CLAMP

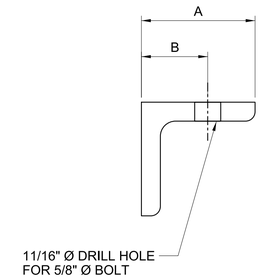

ANGLE SIZE	BOLT GAUGE
A (IN)	B (IN)
3	1¾
3½	2
4	2½
5	3
6	3½

DRILLING REQUIREMENTS FOR STRUCTURAL ANGLES

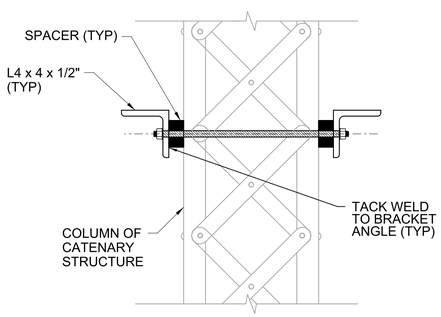

SECTION 1 -

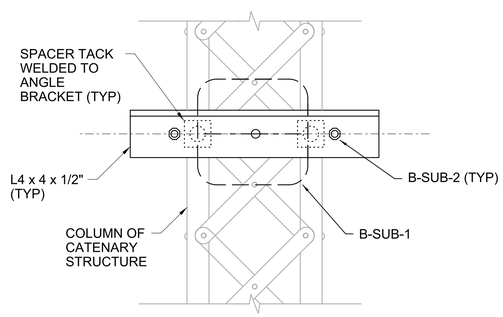

SECTION 2 -

ASSEMBLY TYPE B-1
TYPICAL SUPPORT BRACKET

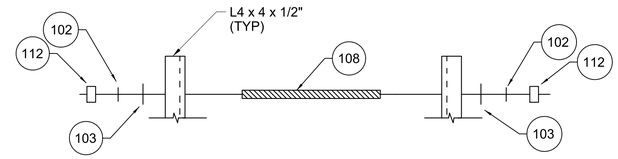

DETAIL B-SUB-2
TYPICAL BRACKET BINDING ASSEMBLY

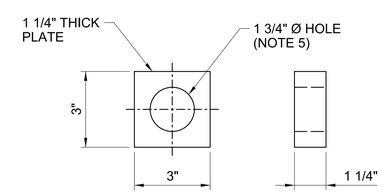

SPACER DETAIL

NOTES:

1. ALL MATERIALS SHALL BE GALVANIZED AFTER FABRICATION UNLESS OTHERWISE NOTED. ALL FIELD CUTS SHALL RECEIVE TOUCHED UP PAINT.
2. PORTLAND BOLTS FABRICATED TO CONTRACT SPECIFICATIONS.
3. TORQUE ALL FASTENERS IN ACCORDANCE WITH MANUFACTURER'S RECOMMENDATIONS.
4. LENGTH OF STEEL BRACKET AND RODS VARIES DEPENDING ON STRUCTURE TYPE. CONTRACTOR SHALL VERIFY ALL MEASUREMENTS PRIOR TO FABRICATION AND INSTALLATION.
5. HOLE IN SPACER TO ALLOW FOR PROPER FIT ON RIVETED CATENARY STRUCTURES. CONTRACTOR TO VERIFY RIVET HEAD SIZE FOR DIAMETER OF HOLE IN SPACER.

BILL OF MATERIALS

REF #	DESCRIPTION	QUANTITY B-1	MANUFACTURER PART # / DETAIL (OR APPROVED EQUAL)
102	5/8" LOCK WASHER	5	HUBBELL / CHANCE 4036
103	5/8" WASHER	6	HUBBELL / CHANCE 6805
107	5/8" Ø A325 BOLT	1	PORTLAND BOLT (SEE NOTE 2)
108	5/8" Ø ASTM A307 THREADED ROD	2	FIELD CUT AS REQUIRED
112	5/8" HEAVY HEX NUT	6	PORTLAND BOLT
201	3 BOLT CLAMP	1	ELECTRIC MOTION EM0930
202	J HOOK	1	MACLEAN POWER SYSTEMS J2235C
–	SPACER	4	

REV.	DATE	REVISION DESCRIPTION	SHEET NO.

THE INFORMATION, INCLUDING ESTIMATED QUANTITIES OF WORK, SHOWN ON THESE SHEETS IS BASED ON LIMITED INVESTIGATIONS BY THE STATE AND IS IN NO WAY WARRANTED TO INDICATE THE CONDITIONS OF ACTUAL QUANTITIES OF WORK WHICH WILL BE REQUIRED.

Plotted Date: 6/11/2019

DESIGNER/DRAFTER: BD
CHECKED BY: BC
NOT TO SCALE

STATE OF CONNECTICUT
DEPARTMENT OF TRANSPORTATION

Filename: ...\FCI-720_CNS_Sheet_0300-0202.dgn

SIGNATURE/BLOCK:
STV Incorporated
185 Plains Road
Suite 208E
Milford, CT 06461

PROJECT TITLE:
NETWORK INFRASTRUCTURE UPGRADE FOR SECURITY
NEW HAVEN LINE
PHASE 3

TOWN: STAMFORD TO WESTPORT

DRAWING TITLE: ASSEMBLY DETAILS
SHEET 1 OF 2

PROJECT NO. 300-0202
DRAWING NO. FCI-720
SHEET NO. 05.07

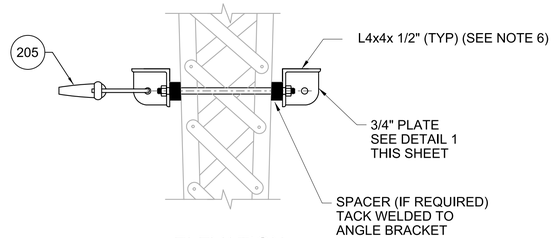

ELEVATION

ASSEMBLY TYPE D-3
DEADEND BRACKET ASSEMBLY

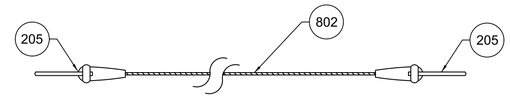

ASSEMBLY TYPE D-3B
AERIAL GUY

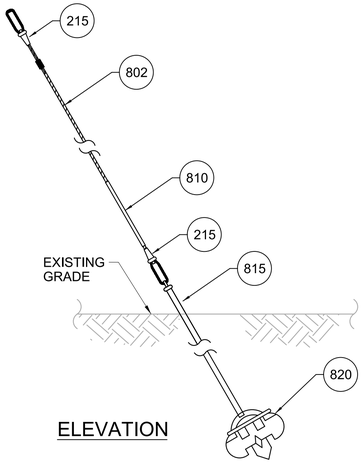

ELEVATION

ASSEMBLY TYPE D-8
GUY DEADEND ASSEMBLY

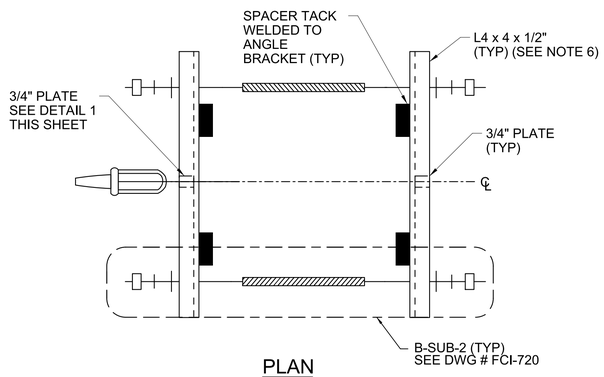

PLAN

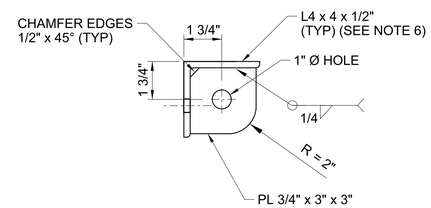

DETAIL 1 / -

BILL OF MATERIALS

REF #	DESCRIPTION	QUANTITY PER ASSEMBLY			MANUFACTURER PART # / DETAIL
		D-3	D-3B	D-8	(OR APROVED EQUAL)
102	5/8" LOCKWASHER	4	–	–	HUBBELL / CHANCE 4036
103	5/8" WASHER	4	–	–	HUBBELL / CHANCE 6805
108	5/8" Ø ASTM A307 THREADED ROD	2	–	–	FIELD CUT AS REQUIRED
112	5/8" HEAVY HEX NUT	4	–	–	PORTLAND BOLT (SEE NOTE 3)
205	1/4" STRANDVISE	1	2	–	HUBBELL GDE-5200
215	7/16" STRANDVISE	–	–	2	HUBBELL GDE-5203
802	7/16" Ø GUY WIRE, 7-STRAND EHS STEEL, GALV.	–	1	1	–
810	YELLOW GUY MARKER, 1 1/8" x 8 FOOT LONG	–	–	1	HUBBELL / CHANCE 96FRPE
815	3/4" x 10 FT LONG EXPANDING ANCHOR ROD	–	–	1	HUBBELL 5360
820	EXPANSION ANCHOR FOR 3/4" ROD	–	–	1	HUBBELL 108234
–	SPACER (DWG # FCI-720)	4	–	–	–

NOTES:

1. ALL MATERIALS TO BE GALVANIZED AFTER FABRICATION UNLESS OTHERWISE NOTED.
2. TORQUE ALL FASTENERS IN ACCORDANCE WITH MANUFACTURER'S RECOMMENDATIONS.
3. PORTLAND BOLTS FABRICATED TO CONTRACT SPECIFICATIONS.
4. BOLT MAY HAVE TO BE CUT IN THE FIELD FOR PROPER FIT-UP.
5. SEE DWG # FCI-724 FOR GROUNDING DETAILS.
6. FOR BRACKET ANGLE LENGTHS AND DRILLING LOCATIONS, SEE TABLES ON DWG # FCI-720.

REV.	DATE	REVISION DESCRIPTION	SHEET NO.

THE INFORMATION, INCLUDING ESTIMATED QUANTITIES OF WORK, SHOWN ON THESE SHEETS IS BASED ON LIMITED INVESTIGATIONS BY THE STATE AND IS IN NO WAY WARRANTED TO INDICATE THE CONDITIONS OF ACTUAL QUANTITIES OF WORK WHICH WILL BE REQUIRED.

Plotted Date: 6/11/2019

DESIGNER/DRAFTER: BD
CHECKED BY: BC
NOT TO SCALE

STATE OF CONNECTICUT
DEPARTMENT OF TRANSPORTATION

Filename: ...\FCI-721_CNS_Sheet_0300-0202.dgn

SIGNATURE/BLOCK:

STV Incorporated
185 Plains Road
Suite 208E
Milford, CT 06461

PROJECT TITLE:
NETWORK INFRASTRUCTURE UPGRADE FOR SECURITY NEW HAVEN LINE PHASE 3

TOWN: STAMFORD TO WESTPORT

DRAWING TITLE: ASSEMBLY DETAILS SHEET 2 OF 2

PROJECT NO. 300-0202
DRAWING NO. FCI-721
SHEET NO. 05.08

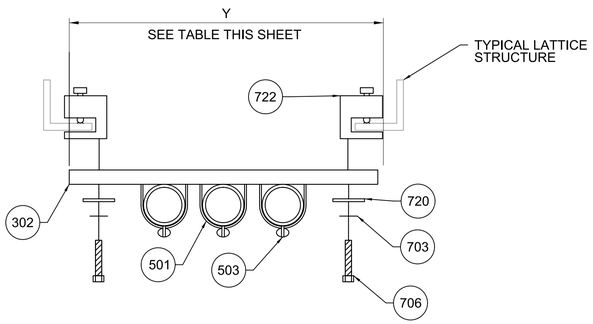

ASSEMBLY TYPE C-1

BILL OF MATERIALS

REF #	DESCRIPTION	QUANTITY C-1	MANUFACTURER PART # / DETAIL (NOTE 3 & 6) (OR APPROVED EQUAL)
302	1 5/8" CHANNEL, 12 GAUGE	1	UNISTRUT P1000HS
501	CONDUIT (NOTE 4)	AS REQ'D	ALLIED RIGID
503	CONDUIT CLAMP (NOTE 4)	AS REQ'D	UNISTRUT P1117
703	1/2" WASHER	2	HUBBELL / CHANCE PS6803
706	1/2" Ø HEX HEAD BOLT	2	PORTLAND BOLT
720	FLAT PLATE FITTING	2	UNISTRUT P1064
722	BEAM CLAMP	2	UNISTRUT PFL050T

CHANNEL STRUT LENGTHS	
"Y" (NOTE 5)	STRUCTURE TYPE
26"	PORTAL LATTICE WITH ANGLE LEGS (LA)

NOTES:

1. TORQUE ALL FASTENERS IN ACCORDANCE WITH MANUFACTURER'S RECOMMENDATIONS.
2. NUMBER OF CONDUITS, THEIR SIZE, AND MATERIAL ARE SPECIFIED IN CABLE ROUTING PLAN DRAWINGS.
3. ALL MOUNTING HARDWARE FOR PVC COATED CONDUIT ON CATENARY STRUCTURES SHALL BE STAINLESS STEEL. HOT-DIP GALVANIZED HARDWARE SHALL BE USED OTHERWISE.
4. MANUFACTURER PART NUMBER VARIES DEPENDING ON SIZE OF CONDUIT. SEE CABLE ROUTING PLANS FOR MORE INFORMATION.
5. LENGTH OF STRUT CHANNEL VARIES DEPENDING ON CATENARY STRUCTURE TYPE. CONTRACTOR SHALL VERIFY ALL MEASUREMENTS PRIOR TO FABRICATION AND CONSTRUCTION.
6. THE PART NUMBERS SHOWN ARE FOR REFERENCE ONLY. ALL ITEMS SHALL BE COMPATIBLE TO FORM A COMPLETE CONDUIT SUPPORT SYSTEM IN ACCORDANCE WITH MANUFACTURER INSTRUCTIONS.

REV.	DATE	REVISION DESCRIPTION	SHEET NO.

THE INFORMATION, INCLUDING ESTIMATED QUANTITIES OF WORK, SHOWN ON THESE SHEETS IS BASED ON LIMITED INVESTIGATIONS BY THE STATE AND IS IN NO WAY WARRANTED TO INDICATE THE CONDITIONS OF ACTUAL QUANTITIES OF WORK WHICH WILL BE REQUIRED.

Plotted Date: 6/11/2019

DESIGNER/DRAFTER: BD
CHECKED BY: BC
NOT TO SCALE

STATE OF CONNECTICUT
DEPARTMENT OF TRANSPORTATION

Filename: ...\FCI-722_CNS_Sheet_0300-0202.dgn

SIGNATURE/BLOCK:

STV Incorporated
185 Plains Road
Suite 208E
Milford, CT 06461

PROJECT TITLE:
NETWORK INFRASTRUCTURE UPGRADE FOR SECURITY
NEW HAVEN LINE
PHASE 3

TOWN: STAMFORD TO WESTPORT

DRAWING TITLE: CONDUIT ASSEMBLY DETAILS

PROJECT NO. 300-0202
DRAWING NO. FCI-722
SHEET NO. 05.09

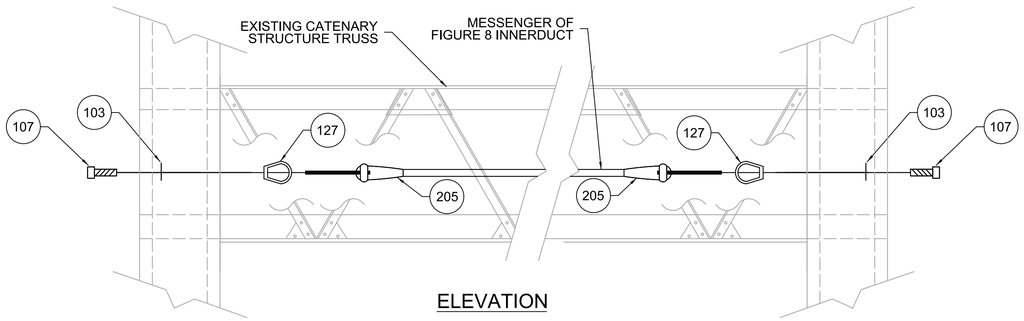

ELEVATION

TYPE X-1
TYPICAL CABLE CROSSING ASSEMBLY

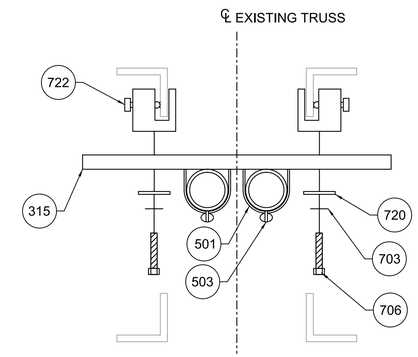

ASSEMBLY TYPE X-2

BILL OF MATERIALS

REF #	DESCRIPTION	QUANTITY PER ASSEMBLY		MANUFACTURER PART # / DETAIL (OR APROVED EQUAL)
		X-1	X-2	
103	5/8" WASHER	2	–	HUBBELL / CHANCE 6805
107	5/8" Ø A325 BOLT	2	–	PORTLAND BOLT
127	5/8" THIMBLE EYE NUT	2	–	HUBBELL / CHANCE 6510
205	1/4" STRANDVISE	2	–	HUBBELL GDE-5200
315	1 5/8 x 3 1/4" CHANNEL, 12 GAUGE	–	1	UNISTRUT P5000HS
501	CONDUIT (NOTE 3)	–	AS REQ'D	ALLIED RIGID
503	CONDUIT CLAMP (NOTE 3)	–	AS REQ'D	UNISTRUT P1117
703	1/2" WASHER	–	2	HUBBELL / CHANCE PS6803
706	1/2" Ø HEX HEAD BOLT	–	2	PORTLAND BOLT
720	FLAT PLATE FITTING	–	2	UNISTRUT P1064
722	BEAM CLAMP	–	2	UNISTRUT PFL050T
–	FIGURE 8 INNERDUCT MESSENGER	AS REQD	–	UNISTRUT PFL050T

NOTES:

1. TORQUE ALL FASTENERS IN ACCORDANCE WITH MANUFACTURER'S RECOMMENDATIONS.
2. PORTLAND BOLTS FABRICATED TO CONTRACT SPECIFICATIONS.
3. MANUFACTURER PART NUMBER VARIES DEPENDING ON SIZE OF CONDUIT. SEE CABLE ROUTING PLANS FOR MORE INFORMATION.

REV.	DATE	REVISION DESCRIPTION	SHEET NO.

THE INFORMATION, INCLUDING ESTIMATED QUANTITIES OF WORK, SHOWN ON THESE SHEETS IS BASED ON LIMITED INVESTIGATIONS BY THE STATE AND IS IN NO WAY WARRANTED TO INDICATE THE CONDITIONS OF ACTUAL QUANTITIES OF WORK WHICH WILL BE REQUIRED.

Plotted Date: 6/11/2019

DESIGNER/DRAFTER: BD
CHECKED BY: BC
NOT TO SCALE

STATE OF CONNECTICUT
DEPARTMENT OF TRANSPORTATION

Filename: ...\FCI-723_CNS_Sheet_0300-0202.dgn

SIGNATURE/BLOCK:

STV Incorporated
185 Plains Road
Suite 208E
Milford, CT 06461

PROJECT TITLE:
NETWORK INFRASTRUCTURE UPGRADE FOR SECURITY NEW HAVEN LINE PHASE 3

TOWN: STAMFORD TO WESTPORT

DRAWING TITLE: CABLE CROSSOVER ASSEMBLY DETAILS

PROJECT NO. 300-0202
DRAWING NO. FCI-723
SHEET NO. 05.10

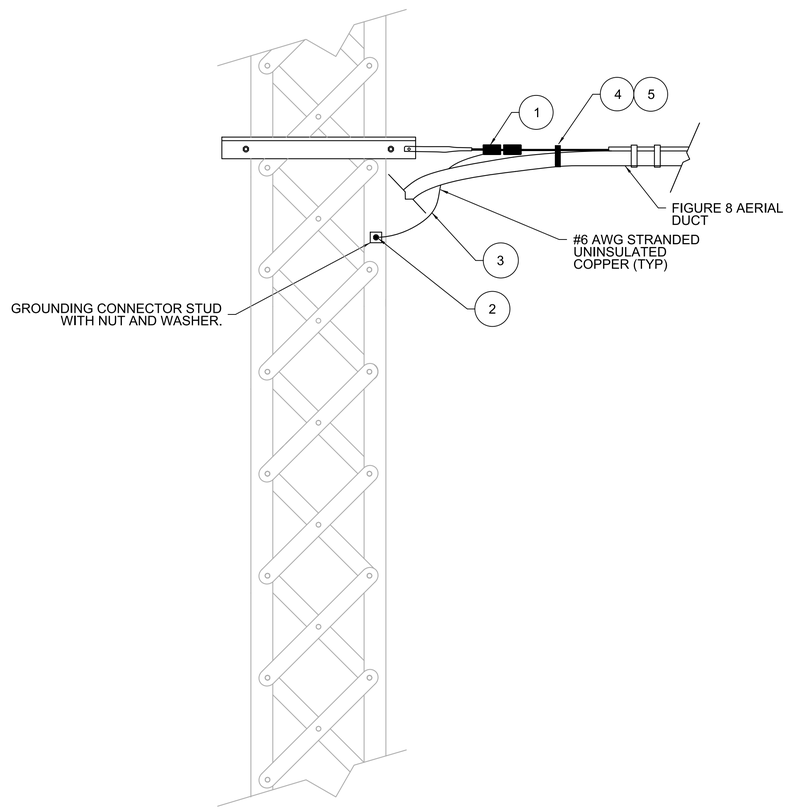

TYPE G-1
TYPICAL MESSENGER GROUNDING
(NOTE 4)

NOTES:

1. MESSENGER STRANDS SHALL BE GROUNDED AT ALL DEAD END LOCATIONS
2. HOLE SHALL BE DRILLED NO LESS THEN ONE INCH FROM EDGE OF STEEL STRUCTURE FOR SERVICE POST GROUNDING STUD AND USING MAGNETIC DRILL BITS. STEEL STRUCTURE SHALL BE PREPARED AND STUD SHALL BE SECURED WITH FLANGED LOCK WASHERS AND NUTS TO ENSURE MECHANICAL AND ELECTRICAL CONNECTION TO STRUCTURAL STEEL AND SHALL BE TREATED WITH APPROVED ANTI-OXIDANT GREASE AFTER INSTALLATION.
3. FOR DETAILS OF MESSENGER GROUNDING SEE SPECIFICATIONS.
4. TYPICAL BONDING SHOWN, APPLIES TO ALL METALLIC STRUCTURE TYPES.

BILL OF MATERIALS

REF #	DESCRIPTION	QUANTITY TYPE G-1	MANUFACTURER PART # / DETAIL (OR APPROVED EQUAL)
1	BONDING CLAMP	2	ELECTRIC MOTION EM4811
2	GROUND CONNECTOR STUD	1	THOMAS & BETTS #SP2SL
3	#6 AWG STRANDED COPPER WIRE, UNINSULATED	AS REQUIRED	
4	CABLE SUPPORT STRAP, LENGTH AS REQ'D S.S.	AS REQUIRED	POWER & TEL #34-08912/22/32
5	CABLE SPACER	2	POWER & TEL #34-08850/75

REV.	DATE	REVISION DESCRIPTION	SHEET NO.

THE INFORMATION, INCLUDING ESTIMATED QUANTITIES OF WORK, SHOWN ON THESE SHEETS IS BASED ON LIMITED INVESTIGATIONS BY THE STATE AND IS IN NO WAY WARRANTED TO INDICATE THE CONDITIONS OF ACTUAL QUANTITIES OF WORK WHICH WILL BE REQUIRED.

Plotted Date: 6/11/2019

DESIGNER/DRAFTER: BD
CHECKED BY: RS
NOT TO SCALE

STATE OF CONNECTICUT
DEPARTMENT OF TRANSPORTATION

Filename: ...\FCI-724_CNS_Sheet_0300-0202.dgn

SIGNATURE/BLOCK:
STV Incorporated
185 Plains Road
Suite 208E
Milford, CT 06461

PROJECT TITLE:
NETWORK INFRASTRUCTURE UPGRADE FOR SECURITY NEW HAVEN LINE PHASE 3

TOWN: STAMFORD TO WESTPORT

DRAWING TITLE: GROUNDING DETAILS

PROJECT NO. 300-0202
DRAWING NO. FCI-724
SHEET NO. 05.11