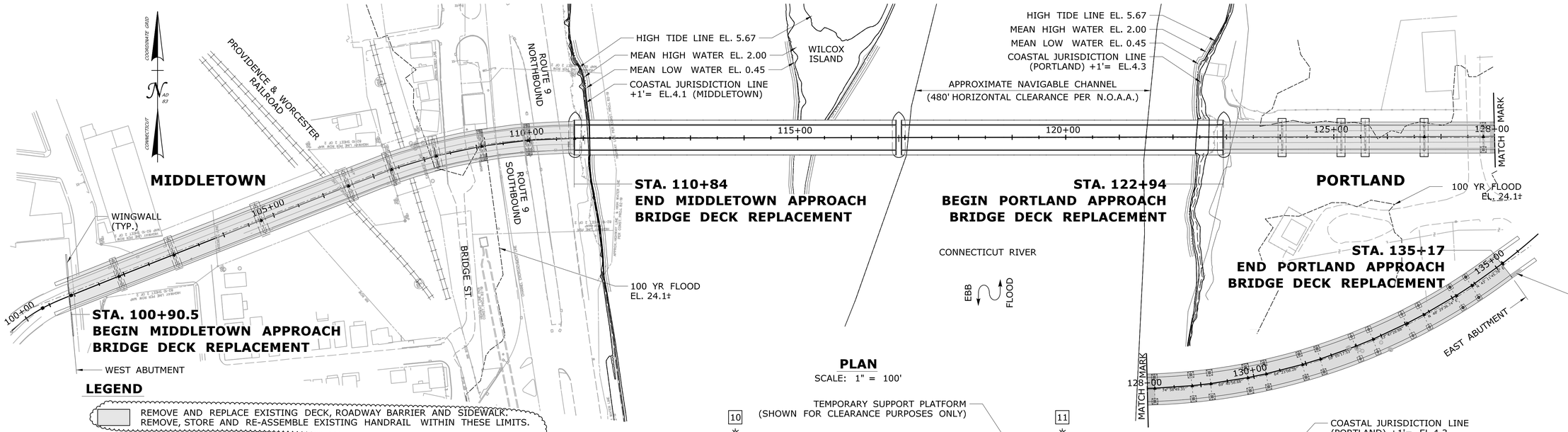

PLAN

SCALE: 1" = 100'

LEGEND

REMOVE AND REPLACE EXISTING DECK, ROADWAY BARRIER AND SIDEWALK. REMOVE, STORE AND RE-ASSEMBLE EXISTING HANDRAIL WITHIN THESE LIMITS.

(X) DENOTES PIER NO.

[Y] DENOTES SPAN NO.

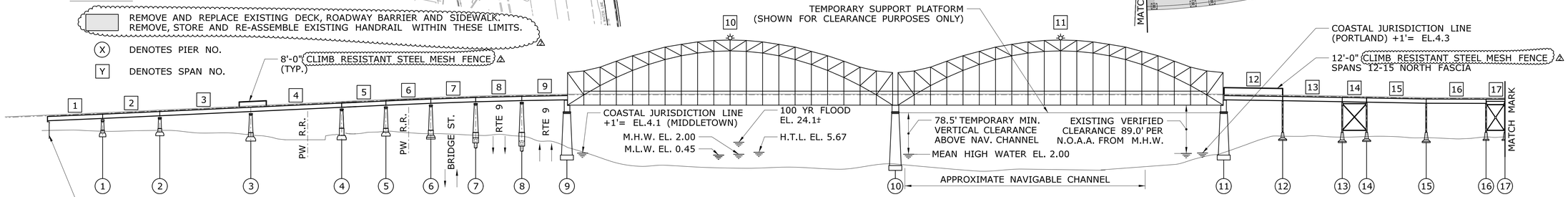

ELEVATION

SCALE: 1" = 100'

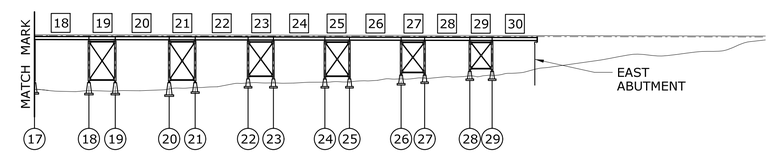

PORTLAND APPROACH

GENERAL NOTES

SPECIFICATIONS: CONNECTICUT DEPARTMENT OF TRANSPORTATION FORM 817 (2016), SUPPLEMENTAL SPECIFICATION DATED JULY 2018 AND SPECIAL PROVISIONS.

DESIGN SPECIFICATIONS: LRFD AASHTO BRIDGE DESIGN SPECIFICATIONS SEVENTH EDITION (2014), WITH THE INTERIM SPECIFICATIONS UP TO AND INCLUDING 2016, AS SUPPLEMENTED BY THE CONNECTICUT DEPARTMENT OF TRANSPORTATION BRIDGE DESIGN MANUAL (2003) UPDATED AS OF FEBRUARY 2011.
WELDING SHALL CONFORM TO THE REQUIREMENTS OF AWS D1.5/1.1 LATEST EDITION.

ALLOWABLE DESIGN STRESSES:

PARAPET CONCRETE f'_c = 4000 PSI
BRIDGE SIDEWALK CONCRETE f'_c = 4000 PSI
STRUCTURAL REPAIR CONCRETE f'_c = 3000 PSI
ULTRA HIGH PERFORMANCE CONCRETE (UHPC) f'_c = 20000 PSI △3

REINFORCEMENT
(ASTM A615 GRADE 60) f_y = 60000 PSI

STRUCTURAL STEEL
(AASHTO M270, GRADE 50W) f_y = 50000 PSI

LIVE LOAD: HS-20

FUTURE PAVING ALLOWANCE: NONE

STRUCTURAL STEEL: SEE STRUCTURE SHEET NOTES FOR DESIGNATIONS AND REQUIREMENTS.

BITUMINOUS CONCRETE OVERLAY: THIS SHALL CONSIST OF TWO LIFTS. THE FIRST SHALL BE ¾" HMA S0.25(TRAFFIC LEVEL 2) AND THE SECOND SHALL BE 1¾" HMA S0.5 (TRAFFIC LEVEL 2).

CLEARING AND GRUBBING: REQUIRED TO ACCESS THE BASE OF PIERS 3 - 9, OR AS DIRECTED BY THE ENGINEER.

DIMENSIONS: WHEN DECIMAL DIMENSIONS ARE GIVEN TO LESS THAN THREE DECIMAL PLACES, THE OMITTED DIGITS SHALL BE ASSUMED TO BE ZEROS.

EXISTING DIMENSIONS: DIMENSIONS OF THE EXISTING STRUCTURE SHOWN ON THESE PLANS ARE FOR GENERAL REFERENCE ONLY. THEY HAVE BEEN TAKEN FROM THE ORIGINAL DESIGN DRAWINGS AND ARE NOT GUARANTEED. THE CONTRACTOR SHALL TAKE ALL FIELD MEASUREMENTS NECESSARY TO ASSURE PROPER FIT OF THE FINISHED WORK AND SHALL ASSUME FULL RESPONSIBILITY FOR THEIR ACCURACY. WHEN SHOP DRAWINGS BASED ON FIELD MEASUREMENTS ARE SUBMITTED FOR APPROVAL, THE FIELD MEASUREMENTS SHALL ALSO BE SUBMITTED FOR REFERENCE BY THE REVIEWER

EXISTING PLANS: BRIDGE NO. 00524 WAS ORIGINALLY CONSTRUCTED UNDER CONTRACT NO. 82-016 DATED 1936. SUBSEQUENT REPAIRS AND MODIFICATIONS TO THE BRIDGE ARE AS FOLLOWS:

PROJECT NO. 82-137 DATED 1965 - ROADWAY ILLUMINATION IMPROVEMENTS
PROJECT NO. 82-153 DATED 1977 - SUBSTRUCTURE REPAIRS, JOINT REPAIRS, DRAINAGE IMPROVEMENTS, CURB AND SIDEWALK IMPROVEMENTS
PROJECT NO. 82-223 DATED 1988 - SUBSTRUCTURE REPAIRS, STEEL REPAIRS, REPLACEMENT OF ARCH SPAN SUSPENDERS, INSTALLATION OF MAIN SPANS CATWALK, JOINT REPAIRS, DRAINAGE IMPROVEMENTS, MAIN SPAN BARRIER CURB AND PARTIAL SIDEWALK REPLACEMENT
PROJECT NO. 82-252 DATED 1993 - HAUNCH REPAIRS, JOINT REPAIRS, INSTALLATION OF BIRD NETTING, DRAINAGE IMPROVEMENTS AND PAINTING OF STRUCTURAL STEEL
PROJECT NO. 82-300 DATED 2008 - INSTALLATION OF INCIDENT MANAGEMENT SYSTEM AND LANE USE SIGNALS
PROJECT NO. 82-299 DATED 2011 - REPLACEMENT OF MAIN SPAN GRID DECK, STRINGERS, SIDEWALK AND ROADWAY BARRIER; MAIN SPAN RAILING REPAIRS; APPROACH SPAN SIDEWALK REPAIR AND MILLING AND OVERLAY OF APPROACH SPANS

RAILROAD: WORK WITHIN THE RAILROAD RIGHT OF WAY SHALL BE IN CONFORMANCE WITH PROVIDENCE & WORCESTER RAILROAD'S SPECIFICATIONS, WHICH IS INCLUDED IN NOTICE TO CONTRACTOR "PROVIDENCE & WORCESTER RAILROAD SPECIFICATIONS". ANY TEMPORARY RAILROAD CROSSINGS REQUIRED TO ACCESS THE BRIDGE PIERS ON THE MIDDLETOWN APPROACH SHALL BE COORDINATED WITH THE RAILROAD.

INSPECTION OF FIELD WELDS

METHOD	UNIT	QUANTITY
ULTRASONIC	INCH	0
MAGNETIC PARTICLE	FEET	0

CONCRETE DISTRIBUTION

LOCATION	UNIT	QUANTITY
SUBSTRUCTURE	CY	11
SUPERSTRUCTURE	CY	1,610
TOTAL	CY	1,621

SHIPPING DATA

MEMBER	MAX SHIPPING LENGTH	MAX SHIPPING HEIGHT	MAX SHIPPING WIDTH	MAX SHIPPING WEIGHT
DECK PANEL	20'-0"	12"	9'-0"	10,000 LB ±
STRINGER				

NOTICE TO BRIDGE INSPECTORS

THE DEPARTMENT'S BRIDGE SAFETY PROCEDURES REQUIRE THIS BRIDGE TO BE INSPECTED FOR, BUT NOT LIMITED TO, ALL APPROPRIATE COMPONENTS INDICATED IN THE GOVERNING MANUALS FOR BRIDGE INSPECTION. ATTENTION MUST BE GIVEN TO INSPECTING THE FOLLOWING SPECIAL COMPONENTS AND DETAILS. (THE LISTING FOR COMPONENTS FOR SPECIFIC ATTENTION SHALL NOT BE CONSTRUED TO REDUCE THE IMPORTANCE OF INSPECTION OF ANY OTHER COMPONENT OF THE STRUCTURE.) THE FREQUENCY OF INSPECTION OF THIS STRUCTURE SHALL BE IN ACCORDANCE WITH THE GOVERNING MANUALS FOR BRIDGE INSPECTION. UNLESS OTHERWISE DIRECTED BY THE MANAGER OF BRIDGE SAFETY AND EVALUATION.

COMPONENT OR DETAIL	STRUCTURE SHEET REFERENCE
NONE	

Jim Sherwonit
Digitally signed by Jim Sherwonit
Date: 2019.10.16 14:55:16-04'00'

ADDENDUM NO. 3

REV.	DATE	REVISION DESCRIPTION	SHEET NO.
△3	10/08/19	REVISED FENCE CALLOUT AND LEGEND	01.04.003.A3
△1	07/26/19	REVISED SHEET	01.04.003.A1

THE INFORMATION, INCLUDING ESTIMATED QUANTITIES OF WORK, SHOWN ON THESE SHEETS IS BASED ON LIMITED INVESTIGATIONS BY THE STATE AND IS IN NO WAY WARRANTED TO INDICATE THE CONDITIONS OF ACTUAL QUANTITIES OF WORK WHICH WILL BE REQUIRED.

Plotted Date: 10/8/2019

DESIGNER/DRAFTER: JV
CHECKED BY: RJE
SCALE AS NOTED

STATE OF CONNECTICUT
DEPARTMENT OF TRANSPORTATION

Filename: ...\S-03 (GENERAL PLAN).dgn

SIGNATURE/BLOCK:

STV 100 Years
STV INCORPORATED
185 PLAINS ROAD, SUITE 208E
MILFORD, CT 06461
(203) 375-0521

PROJECT TITLE:
REHABILITATION OF THE APPROACH SPANS FOR ARRIGONI BRIDGE NO. 00524

TOWN: **MIDDLETOWN PORTLAND**

DRAWING TITLE: **GENERAL PLAN**

PROJECT NO. **0082-0312**
DRAWING NO. **S-03**
SHEET NO. **01.04.003.A3**

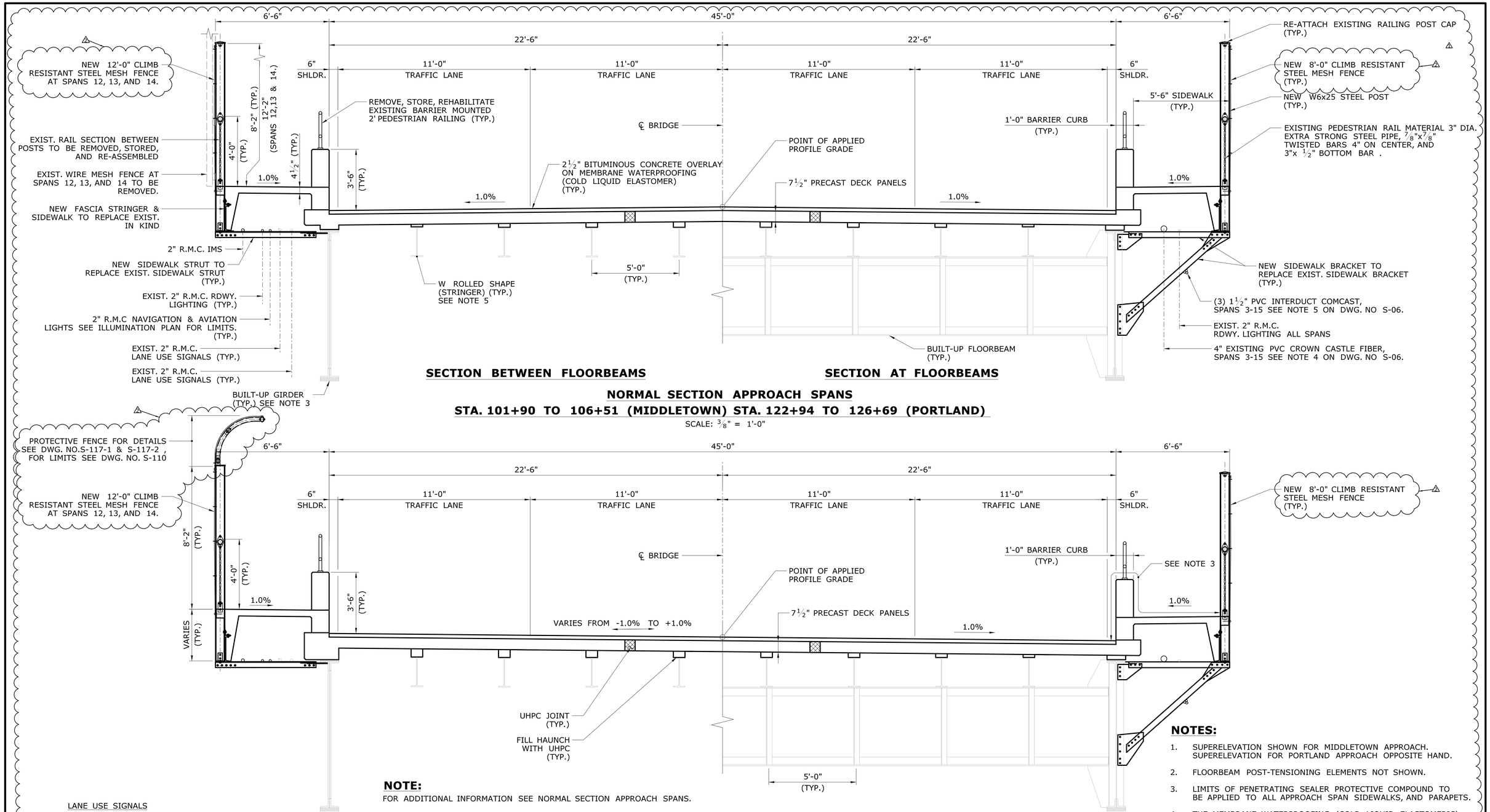

NORMAL SECTION APPROACH SPANS

STA. 101+90 TO 106+51 (MIDDLETOWN) STA. 122+94 TO 126+69 (PORTLAND)

SCALE: 3/8" = 1'-0"

NOTE:

FOR ADDITIONAL INFORMATION SEE NORMAL SECTION APPROACH SPANS.

SECTION BETWEEN FLOORBEAMS **SECTION AT FLOORBEAMS**

SUPERELEVATION SECTION APPROACH SPANS

STA. 100+94 TO 101+90 & STA. 106+51 TO 110+84 (MIDDLETOWN) STA. 127+73 TO 135+14 (PORTLAND)

SCALE: 3/8" = 1'-0"

LANE USE SIGNALS

2" R.M.C. FROM PIER 7 TO PIER 9

2 1/2" R.M.C. FROM PIER 7 TO PIER 9 AND FROM PIER 11 TO PIER 16

NOTE: LOCATION OF UTILITIES ARE APPROXIMATE. CONTRACTOR SHALL BE RESPONSIBLE FOR FIELD VERIFICATION.

NOTES:

1. SUPERELEVATION SHOWN FOR MIDDLETOWN APPROACH. SUPERELEVATION FOR PORTLAND APPROACH OPPOSITE HAND.
2. FLOORBEAM POST-TENSIONING ELEMENTS NOT SHOWN.
3. LIMITS OF PENETRATING SEALER PROTECTIVE COMPOUND TO BE APPLIED TO ALL APPROACH SPAN SIDEWALKS, AND PARAPETS.
4. THE MEMBRANE WATERPROOFING (COLD LIQUID ELASTOMERIC) SHALL EXTEND 2 INCHES UP THE VERTICAL FACE OF THE GUTTER.
5. CONTRACTOR TO ENSURE THAT ALL STRINGERS AND FLOORBEAMS ARE ADEQUATELY BRACED DURING DECK REPLACEMENT.

ADDENDUM NO. 3

REV.	DATE	REVISION DESCRIPTION	SHEET NO.
2	10/08/19	REVISED FENCE CALLOUT	01.04.008.A3
1	07/26/19	REVISED SHEET	01.04.008.A1

THE INFORMATION, INCLUDING ESTIMATED QUANTITIES OF WORK, SHOWN ON THESE SHEETS IS BASED ON LIMITED INVESTIGATIONS BY THE STATE AND IS IN NO WAY WARRANTED TO INDICATE THE CONDITIONS OF ACTUAL QUANTITIES OF WORK WHICH WILL BE REQUIRED.

Plotted Date: 10/10/2019

DESIGNER/DRAFTER: JV

CHECKED BY: RJE

SCALE AS NOTED

STATE OF CONNECTICUT
DEPARTMENT OF TRANSPORTATION

Filename: ...\S-08 (REHABILITATED TYPICAL SECTIONS).dgn

SIGNATURE/BLOCK:

STATE OF CONNECTICUT STEVEN C. SHERRIFF 412172 LICENSED PROFESSIONAL ENGINEER

STV 100 Years

STV INCORPORATED
185 PLAINS ROAD, SUITE 208E
MILFORD, CT 06461
(203) 375-0521

PROJECT TITLE:

REHABILITATION OF THE APPROACH SPANS FOR ARRIGONI BRIDGE NO. 00524

TOWN: **MIDDLETOWN PORTLAND**

DRAWING TITLE: **REHABILITATED TYPICAL SECTIONS**

PROJECT NO. 0082-0312

DRAWING NO. S-08

SHEET NO. 01.04.008.A3

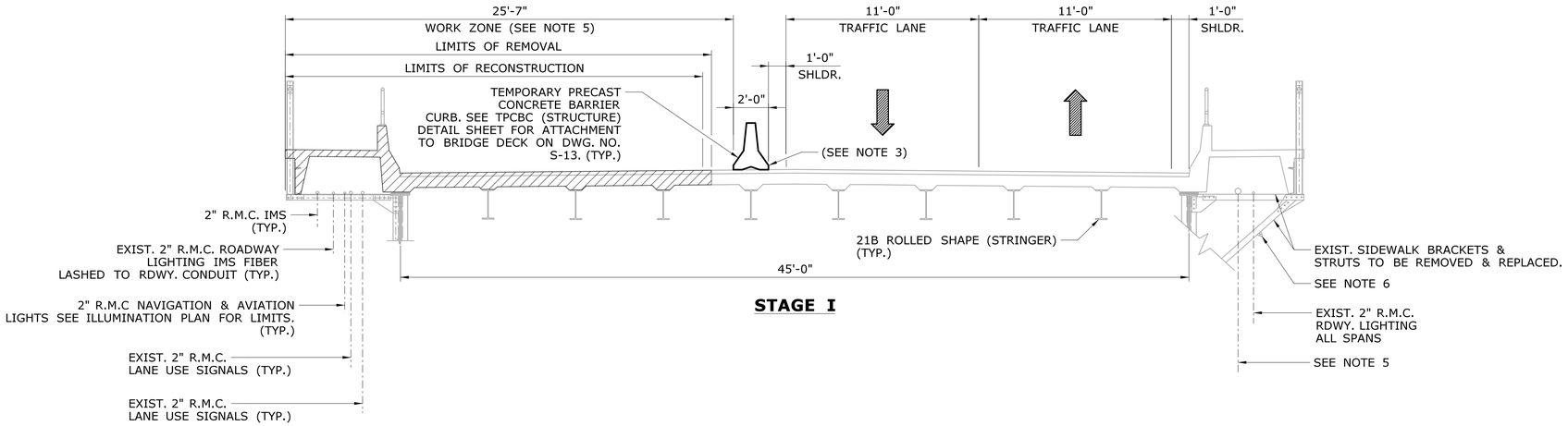

STAGE I

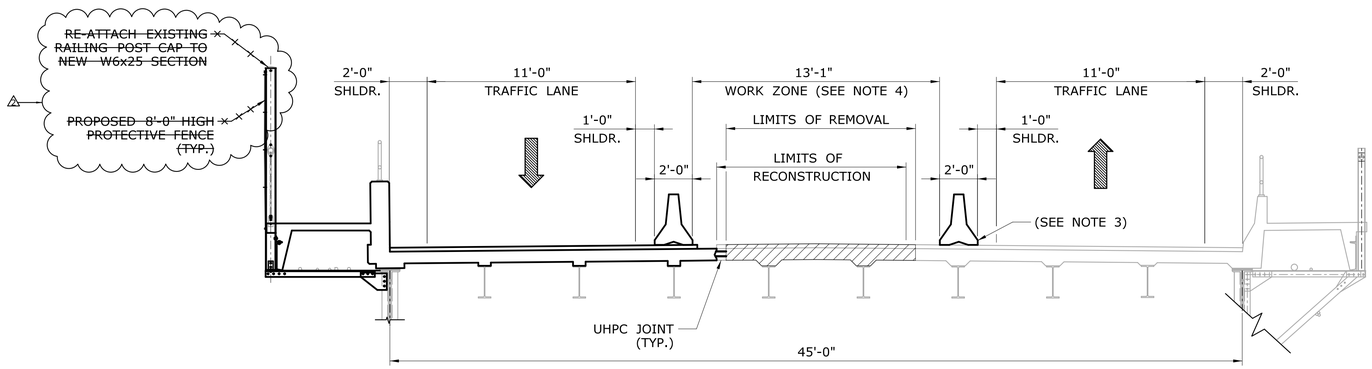

STAGE II

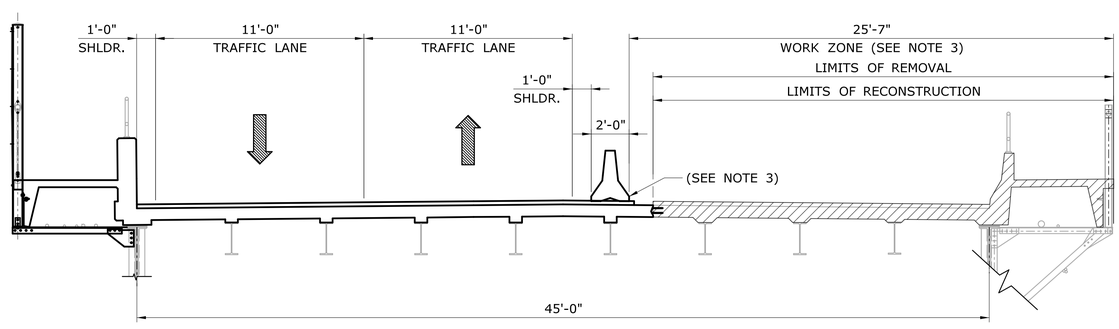

STAGE III

LEGEND

REMOVAL LIMITS

NOTE: LOCATION OF UTILITIES ARE APPROXIMATE. CONTRACTOR SHALL BE RESPONSIBLE FOR VERIFICATION.

TYPICAL BRIDGE SECTION - APPROACH SPANS

SCALE: 1/4" = 1'-0"

SUGGESTED SEQUENCE OF OPERATIONS FOR REPLACEMENT OF DECK IN APPROACH SPANS

I. ESTABLISH STAGE I TRAFFIC CONTROL PLAN FOR WORK ON THE NORTH SIDE OF APPROACH ROADWAYS AND BR. NO. 00524. SEE SUBSET 05 FOR M&PT DETAILS.

II. PROTECTIVE MEASURES OVER BRIDGE SPANS 4,5,& 6, SHALL CONFORM TO GENESEE & WYOMING, (G&W), RAILROAD SPECIFICATIONS INCLUDED ELSEWHERE IN THE CONTRACT DOCUMENTS. CONTRACTOR TO SUBMIT "UNDER BRIDGE PROTECTIVE MEASURES", SHOP DRAWINGS TO PROVIDENCE AND WORCESTER RAILROAD FOR THEIR REVIEW AND APPROVAL PRIOR TO INSTALLATION. SEE DWG. NO. S-12

III. REPLACEMENT OF THE DECK SHALL PROCEED CONTINUOUSLY AND CONCURRENTLY ON THE NORTH SIDE OF THE BRIDGE UNTIL THE ENTIRE WORK WITHIN THE STAGE I WORK ZONE HAS BEEN COMPLETED.

IV. DECK REPLACEMENT SHALL BE COORDINATED WITH THE REPLACEMENT OF THE BARRIER CURB, SIDEWALK AND RAILING SO THAT THE REMOVAL OF THE EXISTING BARRIER CURB, SIDEWALK, AND RAILING PROCEEDS AHEAD OF THE DECK REPLACEMENT, FOLLOWED BY THE INSTALLATION OF THE NEW SIDEWALK, ROADWAY BARRIER AND RAILING.

V. ESTABLISH STAGE II TRAFFIC CONTROL PLAN FOR WORK ON THE MIDDLE THIRD OF BR. 00524 ONLY AFTER ALL WORK WITHIN THE STAGE 1 WORK ZONE HAS BEEN COMPLETED.

VI. ESTABLISH STAGE III TRAFFIC CONTROL PLAN FOR WORK ON THE SOUTH SIDE OF BR. NO. 00524 ONLY AFTER ALL WORK ON THE MIDDLE THIRD OF BR. NO. 00524 DECK HAS BEEN COMPLETED.

NOTES:

1. EACH CONSTRUCTION STAGE SHOWN IS TYPICAL FOR THE ENTIRE LENGTH OF APPROACH SPANS.
2. DIMENSIONS SHOWN ARE BASED ON DETAILS PROVIDED ON ORIGINAL PLANS AND SUBSEQUENT REHABILITATION PLANS. FIELD CONDITIONS MAY VARY.
3. USE EXTREME CARE TO PLACE CENTERLINE OF TEMP. PRECAST CONC. BARRIER CURB COINCIDENT WITH CENTERLINE OF ROADWAY STRINGER.
4. CROWN CASTLE FIBER IN A 4" CONDUIT SHALL BE TEMPORARILY SUPPORTED BY THE CONTRACTOR TO FACILITATE INSTALLATION OF NEW SIDEWALK BRACKETS & STRUTS.
5. THREE 1½" COMCAST INTERDUCTS TO BE TEMPORARILY RELOCATED BY THE UTILITY PRIOR TO STAGE 1 M & PT CONFIGURATION. FACILITIES WILL BE RE-INSTALLED IN THEIR ORIGINAL LOCATION ONCE ALL THREE STAGES ARE COMPLETE.

SEQUENCE OF OPERATIONS:

IN ORDER TO PROVIDE FOR TRAFFIC OPERATIONS AS SPECIFIED IN THE SPECIAL PROVISIONS "MAINTENANCE AND PROTECTION OF TRAFFIC" THE CONTRACTOR SHALL FOLLOW THE SEQUENCE OF OPERATIONS AS OUTLINED HEREIN ON SUBSET 05 PLANS AND AS FURTHER DETAILED IN THE SPECIAL PROVISION "PROSECUTION AND PROGRESS".

ADDENDUM NO. 3

REV.	DATE	REVISION DESCRIPTION	SHEET NO.
2	10/08/19	REMOVED CALLOUTS	01.04.010.A3
1	07/26/19	REVISED SHEET	01.04.010.A1

THE INFORMATION, INCLUDING ESTIMATED QUANTITIES OF WORK, SHOWN ON THESE SHEETS IS BASED ON LIMITED INVESTIGATIONS BY THE STATE AND IS IN NO WAY WARRANTED TO INDICATE THE CONDITIONS OF ACTUAL QUANTITIES OF WORK WHICH WILL BE REQUIRED.

Plotted Date: 10/8/2019

DESIGNER/DRAFTER: JV
CHECKED BY: RJE
SCALE AS NOTED

STATE OF CONNECTICUT
DEPARTMENT OF TRANSPORTATION

Filename: ...\S-10 (CONSTRUCTION STAGES).dgn

SIGNATURE/BLOCK:

STV INCORPORATED
185 PLAINS ROAD, SUITE 208E
MILFORD, CT 06461
(203) 375-0521

PROJECT TITLE:
REHABILITATION OF THE APPROACH SPANS FOR ARRIGONI BRIDGE NO. 00524

TOWN: **MIDDLETOWN PORTLAND**

DRAWING TITLE: **CONSTRUCTION STAGES**

PROJECT NO. 0082-0312
DRAWING NO. S-10
SHEET NO. 01.04.010.A3

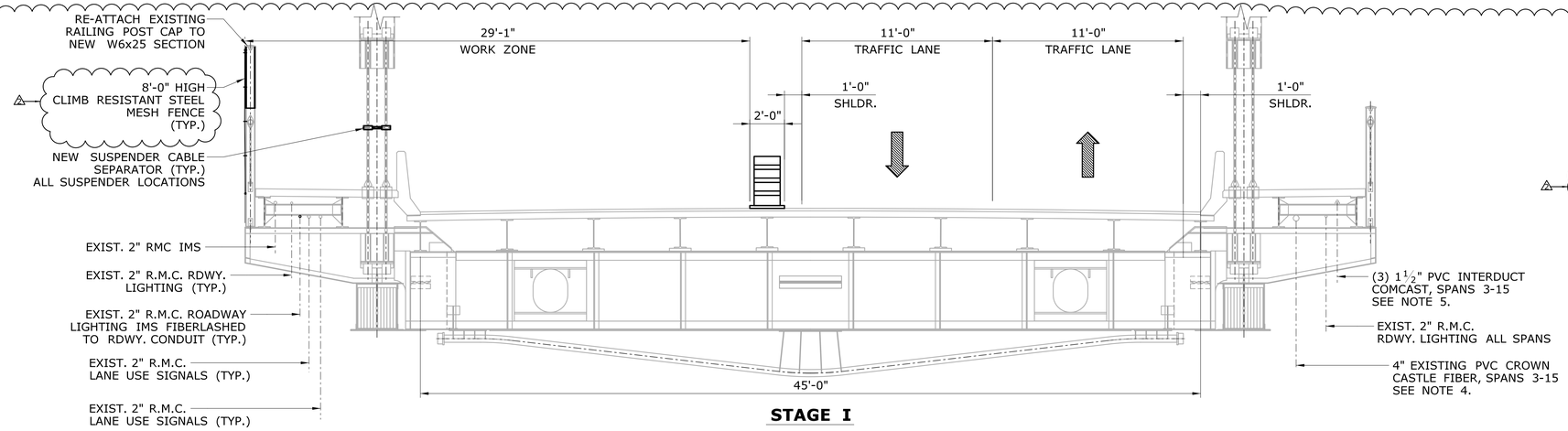

STAGE I

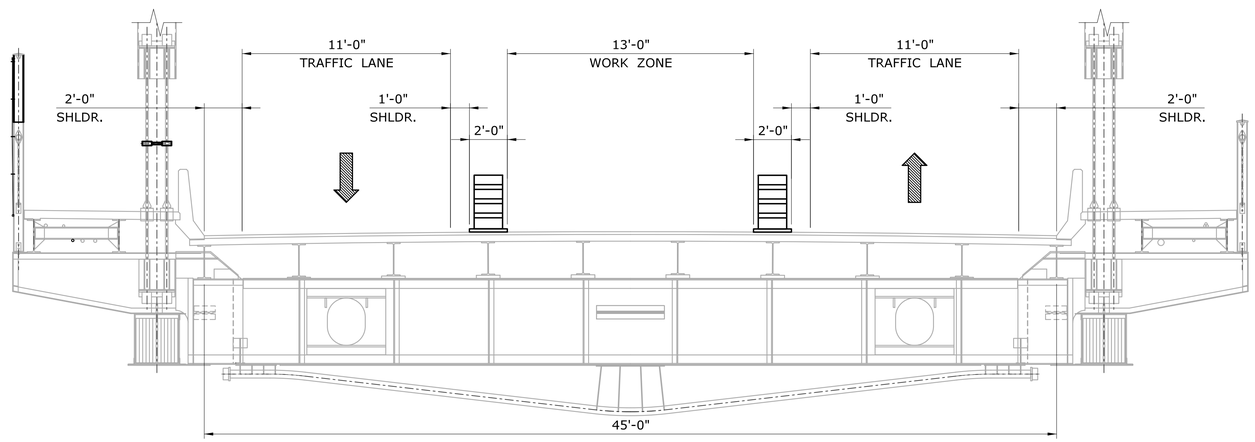

STAGE II

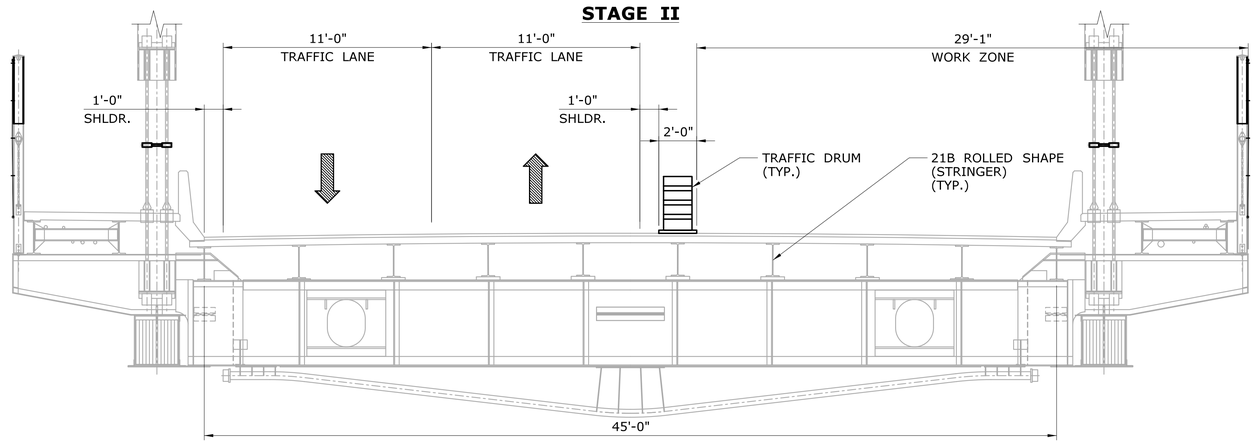

STAGE III

TYPICAL ARCH BRIDGE SECTION

SCALE: 1/4" = 1'-0"

SUGGESTED TRAFFIC STAGES ON THE ARCH SPANS TO CORRESPOND TO CONSTRUCTION STAGES OF THE APPROACH SPANS

1. WORK THIS SHEET WITH DWG NO. S-10
2. EXTEND PEDESTRIAN RAIL POSTS AND CONSTRUCT THE CLIMB RESISTANT STEEL MESH FENCING AS REQUIRED.
3. INSTALL THE NEW SUSPENDER CABLE SEPARATORS AS REQUIRED.

SEQUENCE OF OPERATIONS:

IN ORDER TO PROVIDE FOR TRAFFIC OPERATIONS AS SPECIFIED IN THE SPECIAL PROVISIONS "MAINTENANCE AND PROTECTION OF TRAFFIC" THE CONTRACTOR SHALL FOLLOW THE SEQUENCE OF OPERATIONS AS OUTLINED HEREIN ON SUBSET 05 PLANS AND AS FURTHER DETAILED IN THE SPECIAL PROVISION "PROSECUTION AND PROGRESS".

NOTE: LOCATION OF UTILITIES ARE APPROXIMATE. CONTRACTOR SHALL BE RESPONSIBLE FOR VERIFICATION.

ADDENDUM NO. 3

REV.	DATE	REVISION DESCRIPTION	SHEET NO.
2	10/08/19	REVISED SHEET FENCE CALLOUTS	01.04.011.A3
1	07/26/19	REVISED SHEET	01.04.011.A1

THE INFORMATION, INCLUDING ESTIMATED QUANTITIES OF WORK, SHOWN ON THESE SHEETS IS BASED ON LIMITED INVESTIGATIONS BY THE STATE AND IS IN NO WAY WARRANTED TO INDICATE THE CONDITIONS OF ACTUAL QUANTITIES OF WORK WHICH WILL BE REQUIRED.

Plotted Date: 10/8/2019

DESIGNER/DRAFTER: REM

CHECKED BY: RJE

SCALE AS NOTED

STATE OF CONNECTICUT
DEPARTMENT OF TRANSPORTATION

Filename: ...\S-11 (TYPICAL ARCH SECTIONS STAGE CONSTRUCTION).dgn

SIGNATURE/BLOCK:

STATE OF CONNECTICUT #12175 LICENSED PROFESSIONAL ENGINEER

STV 100 Years
STV INCORPORATED
185 PLAINS ROAD, SUITE 208E
MILFORD, CT 06461
(203) 375-0521

PROJECT TITLE:
REHABILITATION OF THE APPROACH SPANS FOR ARRIGONI BRIDGE NO. 00524

TOWN: **MIDDLETOWN PORTLAND**

DRAWING TITLE: **TYPICAL ARCH SECTIONS STAGE CONSTRUCTION**

PROJECT NO. 0082-0312

DRAWING NO. S-11

SHEET NO. 01.04.011.A3

TABLE OF SPLICE LENGTH

	BAR SIZE	MIN. SPLICE LENGTH
REINFORCEMENT SPACING @ ± 6" O.C.**	#4	1'-4"
	#5	1'-6"
	#6	1'-9"
	#7	2'-4"
	#8	3'-0"

** FOR BARS SPACED "LESS THAN" 6" O.C. MULTIPLY TABLE VALUES BY 1.25

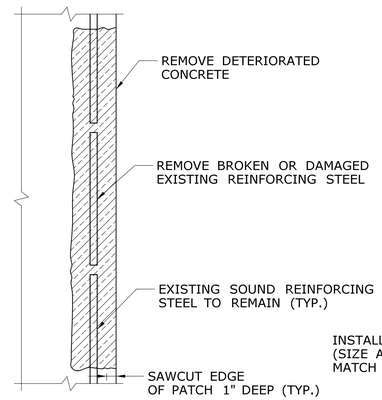

TYPICAL SECTION DAMAGED REINFORCING

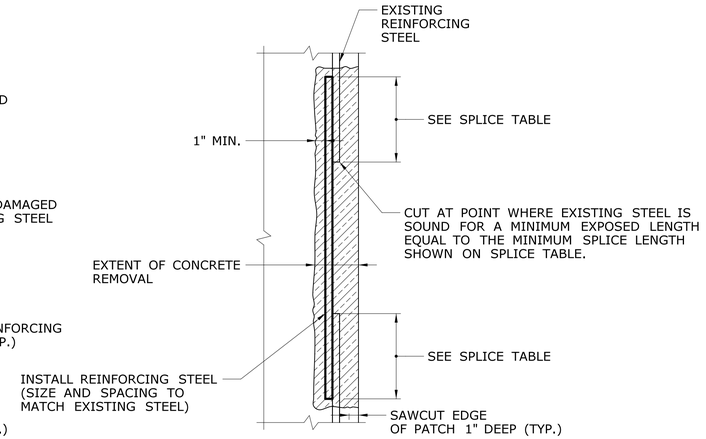

TYPICAL SPLICE DETAIL

REINFORCING REPAIR DETAIL

NOT TO SCALE

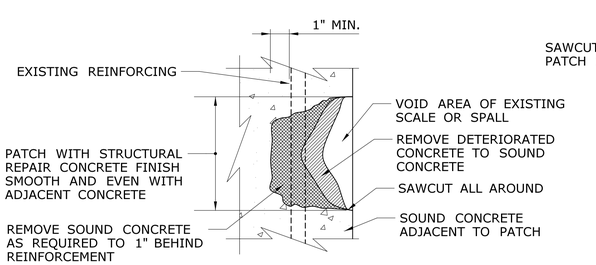

STRUCTURAL REPAIR CONCRETE DETAIL

NOT TO SCALE

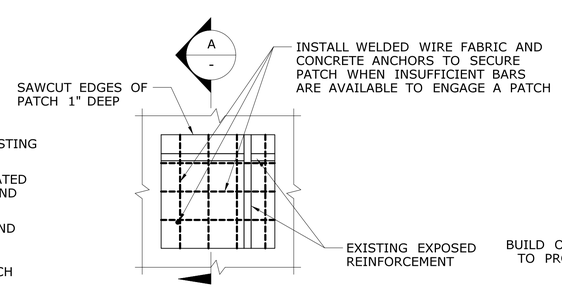

SECURING STRUCTURAL REPAIR CONCRETE PATCH WITH WELDED WIRE FABRIC

NOT TO SCALE

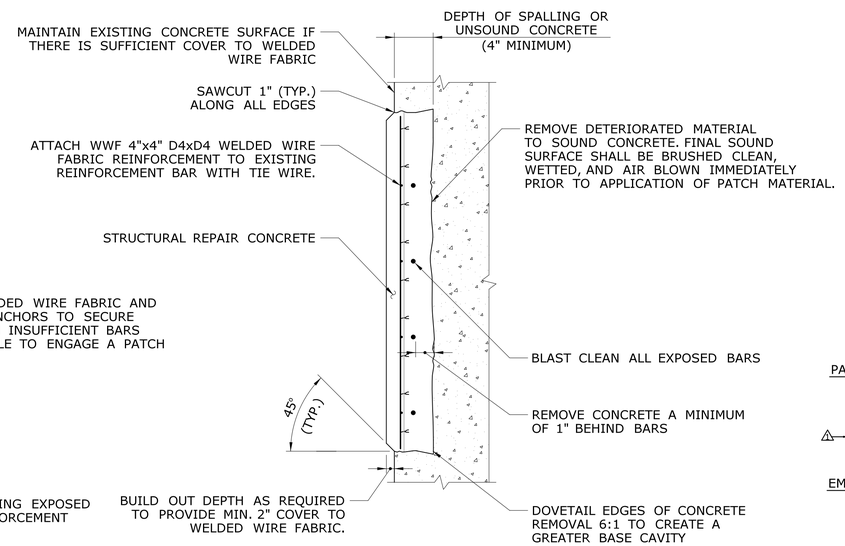

SECTION A/-

NOT TO SCALE

CONCRETE REPAIR NOTES:

THE ENGINEER WILL DETERMINE THE LOCATIONS OF UNSOUND OR DETERIORATED CONCRETE TO BE REPAIRED. THE METHOD USED TO DELINEATE THE AREAS OF CONCRETE TO BE REPAIRED SHALL NOT PERMANENTLY MARK THE CONCRETE, LEAVE ANY RESIDUE AFTER REMOVAL. OR REQUIRE HARSH CHEMICALS TO REMOVE.

THE CONTRACTOR SHALL REMOVE THE DETERIORATED CONCRETE IN ACCORDANCE WITH THE GUIDELINES SET IN THESE NOTES AND IN THE SPECIAL PROVISIONS.

THE CONTRACTOR SHALL SUPPLY WHATEVER MEANS NECESSARY, INCLUDING BUT NOT LIMITED TO LADDERS, LIFTS AND TRAFFIC PROTECTION FOR THE ENGINEER TO SAFELY ACCESS VARIOUS AREAS FOR INSPECTION. THE COST OF PROVIDING ACCESS FOR THE INSPECTION IS INCLUDED IN THE GENERAL COST OF THE PROJECT.

STRUCTURAL REPAIR CONCRETE

THIS TYPE OF REPAIR SHALL BE USED WHERE THE REINFORCING BARS ARE SUFFICIENTLY EXPOSED TO ENGAGE AND ANCHOR PATCHING MATERIAL. IF THERE IS NOT SUFFICIENT REINFORCEMENT AVAILABLE, THEN GALVANIZED MECHANICAL ANCHORS (SEE SPECIAL PROVISIONS FOR MAXIMUM SPACING OR AS DIRECTED BY THE ENGINEER) SHALL BE INSTALLED INTO THE SOUND CONCRETE TO ENGAGE THE WELDED WIRE FABRIC. STRUCTURAL REPAIR CONCRETE MAY BE USED FOR SMALL AREAS LESS THAN FOUR SQUARE FEET WHERE THERE IS A SUFFICIENT TOTAL AREA TO JUSTIFY THE USE OF THIS MATERIAL AND WHERE THE PATCH CAN BE SECURELY ANCHORED BY THE REINFORCING.

OVERHEAD PATCHES SHALL BE A CLASS "S" TYPE UNLESS OTHERWISE DIRECTED BY THE ENGINEER AND SHALL BE ANCHORED SECURELY TO THE REINFORCING BARS.

REINFORCING BAR REPAIRS

REINFORCING WHICH IS DETERMINED BY THE ENGINEER TO BE IN NEED OF REPLACEMENT, SHALL BE REMOVED TO A POINT WHERE IT IS SOUND. THE PATCH SHALL EXTEND A SUFFICIENT DISTANCE BEYOND THIS POINT TO DEVELOP A SPLICE LENGTH SPECIFIED IN THE TABLE ON THIS SHEET.

RESTRICTIONS

THE REMOVAL OF DETERIORATED CONCRETE SHALL PROCEED AS DIRECTED BY THE ENGINEER. IF THE REMOVAL OF DETERIORATED CONCRETE BECOMES EXCESSIVE, THE REMOVAL WORK SHALL BE STOPPED AT THAT LOCATION AND THE ENGINEER NOTIFIED IMMEDIATELY.

MAXIMUM HAMMER SIZE USED TO REMOVE DETERIORATED CONCRETE SHALL BE 15 POUNDS.

IF REMOVAL EXTENDS MORE THAN 1½" BEHIND THE MAIN REINFORCING BARS, THE REMOVAL WORK SHALL BE STOPPED AND THE ENGINEER NOTIFIED IMMEDIATELY.

AT PIER COLUMNS AND CAPS, IF REMOVAL OF DETERIORATED CONCRETE EXTENDS INSIDE THE MAIN REINFORCEMENT, REMOVAL SHALL BE LIMITED TO ONE FACE OF THE MEMBER AT A TIME AND A MAXIMUM AREA 4 SF. REMOVAL MAY BE PERMITTED ON MORE THAN ONE FACE OF THE COLUMN SIMULTANEOUSLY IF THE AREAS OF REMOVAL ARE NOT ADJACENT TO OR DIRECTLY OPPOSITE ONE ANOTHER. IF REMOVAL EXTENDS MORE THAN 1½" BEHIND THE MAIN REINFORCING BARS, THE REMOVAL WORK SHALL BE STOPPED AND THE ENGINEER NOTIFIED IMMEDIATELY.

BEFORE EXPOSING THE MAIN REINFORCING BARS OF MORE THAN ONE PIER COLUMN AT THE SAME TIME, THE ENGINEER SHALL BE CONSULTED.

AT THE PIER CAP, NO MORE THAN ONE THIRD OF THE UNDERSIDE OF THE CAP SHOULD BE REMOVED AT ONE TIME. IF THE ENTIRE UNDERSIDE OF THE CAP IS TO BE PATCHED, BEGIN AT THE COLUMN AND PATCH ONE-THIRD OF THE CLEAR SPAN OF THE CAP. AFTER THE PATCH HAS GAINED SUFFICIENT STRENGTH, BEGIN AT THE OPPOSITE END OF THE CAP AND PATCH ONE THIRD OF THE SPAN. THE MIDDLE THIRD SHOULD BE PATCHED LAST.

IF A SPLICE IS ENCOUNTERED DURING REMOVAL OF CONCRETE IN A PIER COLUMN OR CAP, WORK AT THAT LOCATION SHALL BE STOPPED AND THE ENGINEER SHALL BE NOTIFIED WORK AT THAT LOCATION SHALL NOT PROCEED UNTIL DIRECTION IS GIVEN BY THE ENGINEER.

PAY ITEM NOTES

1. THE 1" DEEP SAW CUT SHALL BE INCLUDED IN THE CONTRACT BID PRICE FOR THE APPLICABLE REPAIR PAY ITEM.
2. REINFORCING BARS WILL BE PAID FOR AT THE CONTRACT UNIT PRICE FOR "DEFORMED STEEL BARS - EPOXY COATED".

EMBEDDED GALVANIC ANODES

EMBEDDED GALVANIC ANODES SHALL BE INSTALLED IN "STRUCTURAL REPAIR CONCRETE" AND AS DIRECTED BY THE ENGINEER.

ADDENDUM NO. 3

REV.	DATE	REVISION DESCRIPTION	SHEET NO.
1	10/15/19	REVISED NOTE #2	01.04.021.A3

THE INFORMATION, INCLUDING ESTIMATED QUANTITIES OF WORK, SHOWN ON THESE SHEETS IS BASED ON LIMITED INVESTIGATIONS BY THE STATE AND IS IN NO WAY WARRANTED TO INDICATE THE CONDITIONS OF ACTUAL QUANTITIES OF WORK WHICH WILL BE REQUIRED.

Plotted Date: 10/15/2019

DESIGNER/DRAFTER: CSP
CHECKED BY: RJE
SCALE AS NOTED

STATE OF CONNECTICUT
DEPARTMENT OF TRANSPORTATION

Filename: ...\S-21 (CONCRETE REPAIR DETAILS - 1).dgn

SIGNATURE/BLOCK:

STV 100 Years
STV INCORPORATED
185 PLAINS ROAD, SUITE 208E
MILFORD, CT 06461
(203) 375-0521

PROJECT TITLE:
REHABILITATION OF THE APPROACH SPANS FOR ARRIGONI BRIDGE NO. 00524

TOWN: **MIDDLETOWN PORTLAND**

DRAWING TITLE: **CONCRETE REPAIR DETAILS - 1**

PROJECT NO. 0082-0312
DRAWING NO. S-21
SHEET NO. 01.04.021.A3

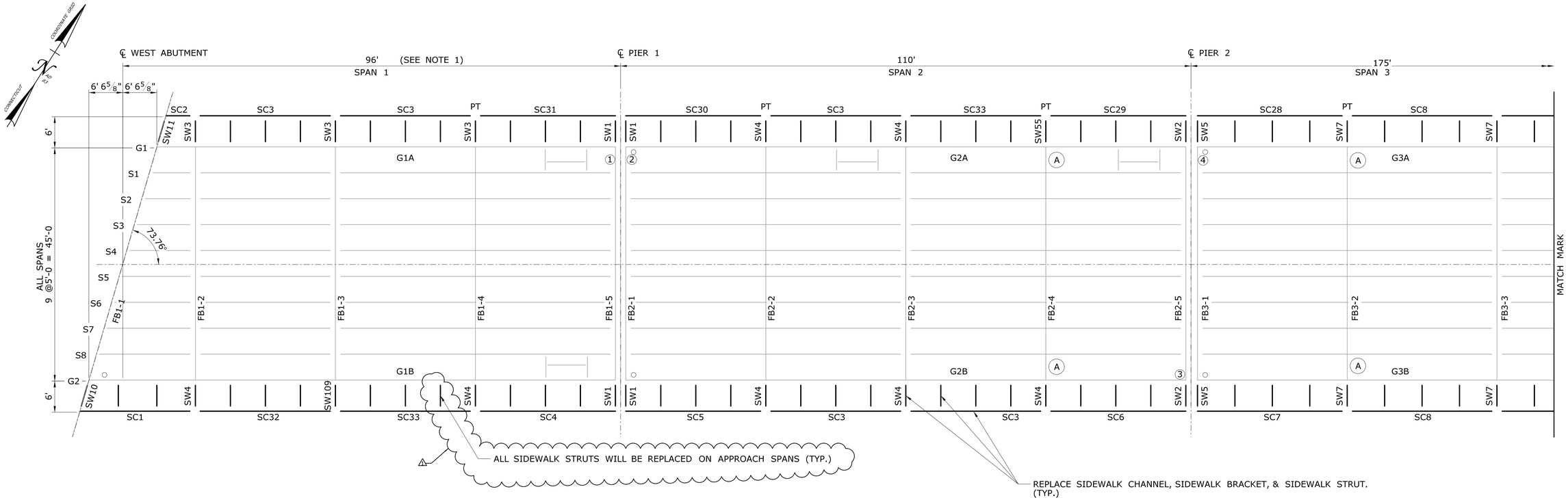

SPANS 1-3
SCALE: 1" = 10'

TABLE OF STEEL REPAIRS

LOCATION SYMBOL	MARK	REPAIR DETAIL	DESCRIPTION OF WORK	REPAIR AREA*
1	FB1-5	III	WEB REPAIR	2"W x FH x 3/16"D
	FB1-5	III	WEB REPAIR	3'L x 4"H x 1/4"D
2	FB2-1	III	WEB REPAIR	1 1/2"W x FH x 1/8"D
3	G2	III	WEB REPAIR	2"W x FH x 1/8"D
4	FB3-1	III	WEB REPAIR	2"W x FH x 3/16"D

* APPROXIMATE DIMENSIONS OF MEMBER SECTION LOSS TAKEN FROM BRIDGE INSPECTION REPORT JANUARY 2017

TABLE OF STEEL STRENGTHENING

STRENGTHENING SYMBOL	STRENGTHENING DETAIL	DESCRIPTION OF WORK
A	A	FLOORBEAM SHEAR STRENGTHENING
B	B	FLOORBEAM FLEXURE STRENGTHENING
C	C	GIRDER SHEAR STRENGTHENING

LEGEND

PT DENOTES POST-TENSTIONED FLOORBEAM

○ NEW WEEP HOLE AT EXISTING WEEPHOLE LOCATION RE-USE EXISTING BRACKETS TO SECURE TO STRUCTURE.

● NEW WEEP HOLE AT NEW LOCATION. PROVIDE NEW BRACKETS TO SECURE TO STRUCTURE.

EXISTING STEEL TO REMAIN

NEW STRUCTURAL STEEL

NOTES:

1. SPAN LENGTHS GIVEN ARE ON CENTERLINE OF BRIDGE AND ARE CHORDS ON CURVE.

ADDENDUM NO. 3

REV.	DATE	REVISION DESCRIPTION	SHEET NO.
1	10/10/19	ADDED CALLOUT FOR SIDEWALK STRUT REPLACEMENT	01.04.038.A3

THE INFORMATION, INCLUDING ESTIMATED QUANTITIES OF WORK, SHOWN ON THESE SHEETS IS BASED ON LIMITED INVESTIGATIONS BY THE STATE AND IS IN NO WAY WARRANTED TO INDICATE THE CONDITIONS OF ACTUAL QUANTITIES OF WORK WHICH WILL BE REQUIRED.

Plotted Date: 10/10/2019

DESIGNER/DRAFTER: JV
CHECKED BY: RJE
SCALE AS NOTED

STATE OF CONNECTICUT
DEPARTMENT OF TRANSPORTATION

Filename: ...\S-38 (FRAMING PLAN - 1).dgn

SIGNATURE/BLOCK:

STV 100 Years
STV INCORPORATED
185 PLAINS ROAD, SUITE 208E
MILFORD, CT 06461
(203) 375-0521

PROJECT TITLE:
REHABILITATION OF THE APPROACH SPANS FOR ARRIGONI BRIDGE NO. 00524

TOWN: **MIDDLETOWN PORTLAND**

DRAWING TITLE: **FRAMING PLAN - 1**

PROJECT NO. **0082-0312**
DRAWING NO. **S-38**
SHEET NO. **01.04.038.A3**

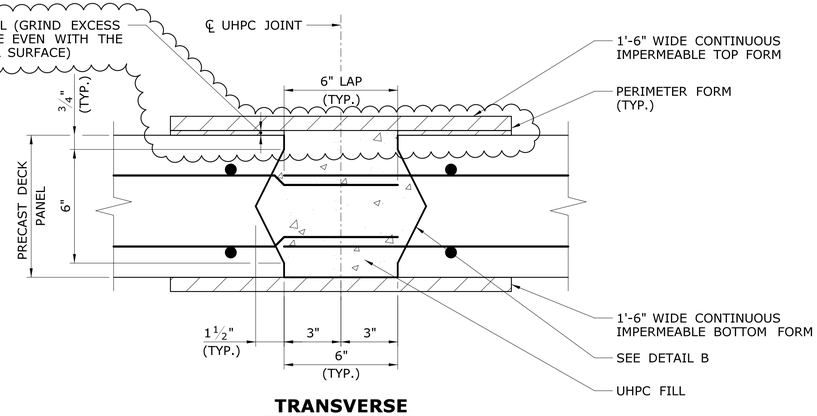

TRANSVERSE

SCALE: 3" = 1'-0"

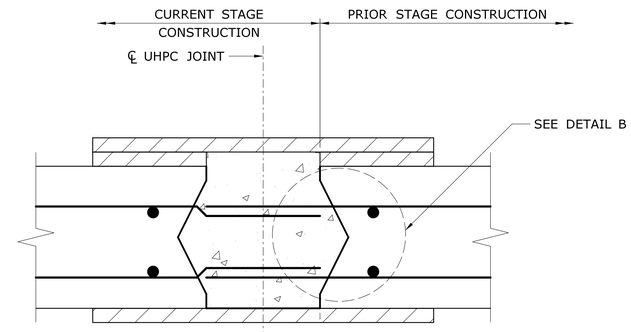

NOTE:

FOR ADDITIONAL INFORMATION SEE TRANSVERSE DETAIL.

LONGITUDINAL

SCALE: 3" = 1'-0"

UHPC JOINT DETAILS

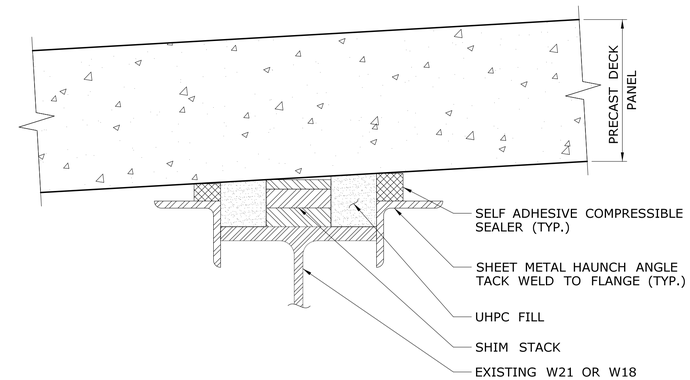

UHPC HAUNCH OVER STRINGER DETAIL (WITH SHIM STACK)

SCALE: 3" = 1'-0"

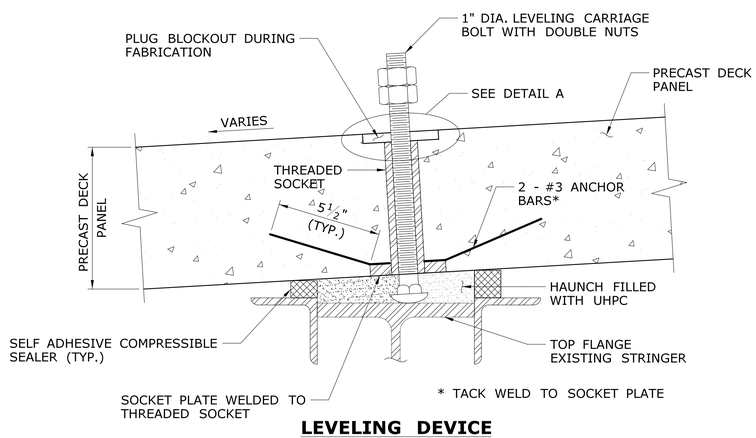

LEVELING DEVICE

SCALE: 3" = 1'-0"

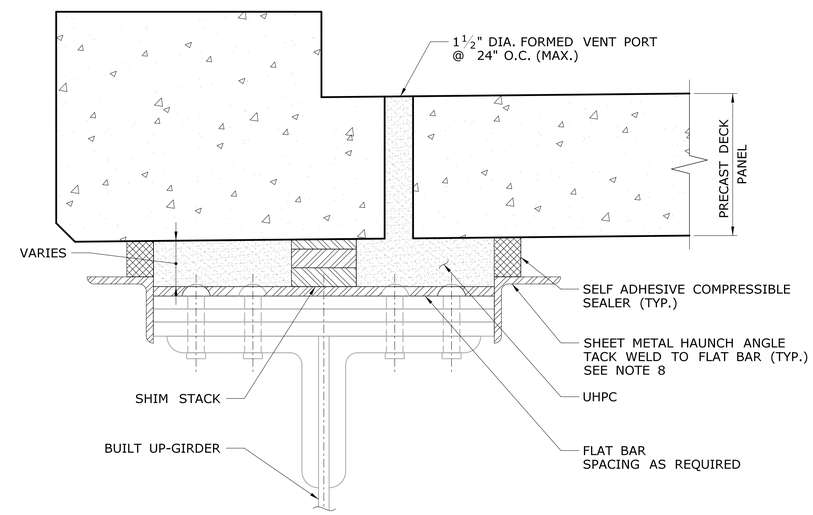

UHPC HAUNCH OVER GIRDER DETAIL (WITH SHIM STACK)

SCALE: 3" = 1'-0"

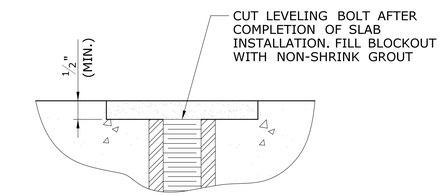

DETAIL A

SCALE: 6" = 1'-0"

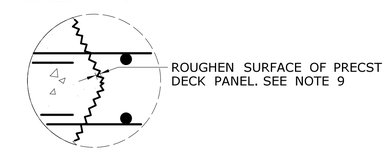

DETAIL B

SCALE: 3" = 1'-0"

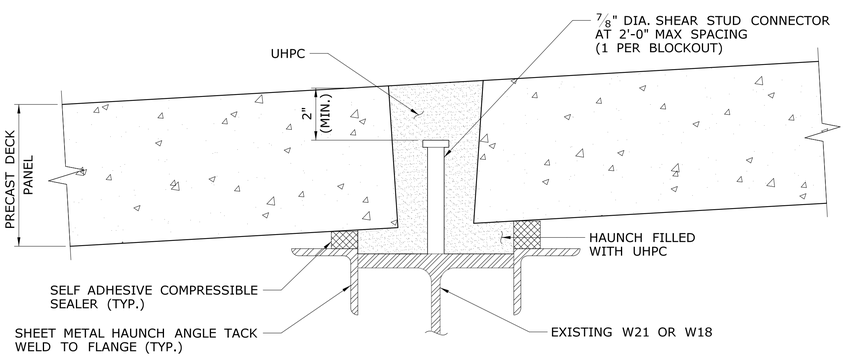

SHEAR CONNECTOR BLOCKOUT WITH HAUNCH

SCALE: 3" = 1'-0"

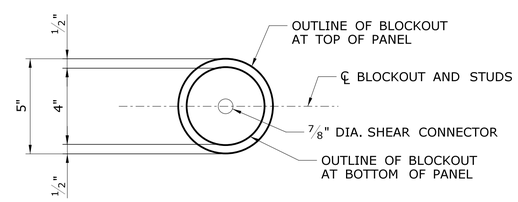

SHEAR CONNECTOR BLOCKOUT DETAIL

SCALE: 1 1/2" = 1'-0"

NOTES:

1. METHOD OF LEVELING DECK PANELS AND FORM WORK DETAILS ARE FOR ILLUSTRATION ONLY. DESIGN, DETAILING FABRICATION AND THE USE OF ALL TEMPORARY WORKS AND DEVICES ARE THE SOLE RESPONSIBILITY OF THE CONTRACTOR AND PRECAST DECK PANEL FABRICATOR.
2. THE COST OF ALL FORM WORK DETAILS AND PRECAST DECK PANEL LEVELING DEVICES ARE INCIDENTAL TO THE COST OF UHPC MATERIAL.
3. PLACE A MINIMUM OF FOUR LEVELING DEVICES PER DECK PANEL.
4. VENT PORTS SHALL BE BLAST CLEANED AND COMPLETELY FILLED WITH UHPC MATERIAL.
5. GIRDER AND STRINGER HAUNCHES SHALL BE COMPLETELY FILLED FULL DEPTH WITH UHPC MATERIAL.
6. ALL UHPC JOINTS SHALL BE COVERED BY A TOP FORM WITH MOISTURE BARRIER.
7. ONCE THE UHPC REACHES A COMPRESSIVE STRENGTH OF 10.0 KST, THE TOP FORMS OF THE JOINT MAY BE REMOVED TO FACILITATE GRINDING OF THE JOINTS TO BE EVEN WITH THE DECK PANEL SURFACE.
8. FIELD WELDING TO THE BUILT-UP GIRDER TOP FLANGE WILL NOT BE PERMITTED.
9. ROUGHEN SURFACE TO ATTAIN 1/4" AVERAGE AMPLITUDE OF THE EXPOSED AGGREGATE FINISH FOR ALL PRECAST CONCRETE SURFACES IN CONTACT WITH UHPC.

ADDENDUM NO. 3

REV.	DATE	REVISION DESCRIPTION	SHEET NO.
2	10/15/19	REVISED OVERFILL THICKNESS	01.04.096.A3
1	07/26/19	REVISED SHEET	01.04.096.A1

THE INFORMATION, INCLUDING ESTIMATED QUANTITIES OF WORK, SHOWN ON THESE SHEETS IS BASED ON LIMITED INVESTIGATIONS BY THE STATE AND IS IN NO WAY WARRANTED TO INDICATE THE CONDITIONS OF ACTUAL QUANTITIES OF WORK WHICH WILL BE REQUIRED.

Plotted Date: 10/15/2019

DESIGNER/DRAFTER: JV

CHECKED BY: RJE

SCALE AS NOTED

STATE OF CONNECTICUT
DEPARTMENT OF TRANSPORTATION

Filename: ...\S-96 (UHPC DETAILS).dgn

SIGNATURE/BLOCK:

STV 100 Years
STV INCORPORATED
185 PLAINS ROAD, SUITE 208E
MILFORD, CT 06461
(203) 375-0521

PROJECT TITLE:
REHABILITATION OF THE APPROACH SPANS FOR ARRIGONI BRIDGE NO. 00524

TOWN: **MIDDLETOWN PORTLAND**

DRAWING TITLE: **UHPC DETAILS**

PROJECT NO. 0082-0312

DRAWING NO. S-96

SHEET NO. 01.04.096.A3

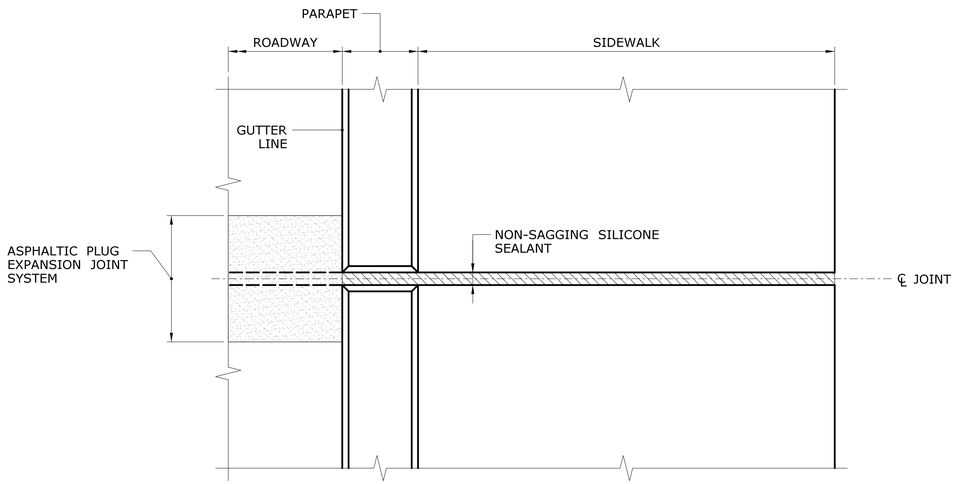

PLAN

SCALE: 1" = 1'-0"

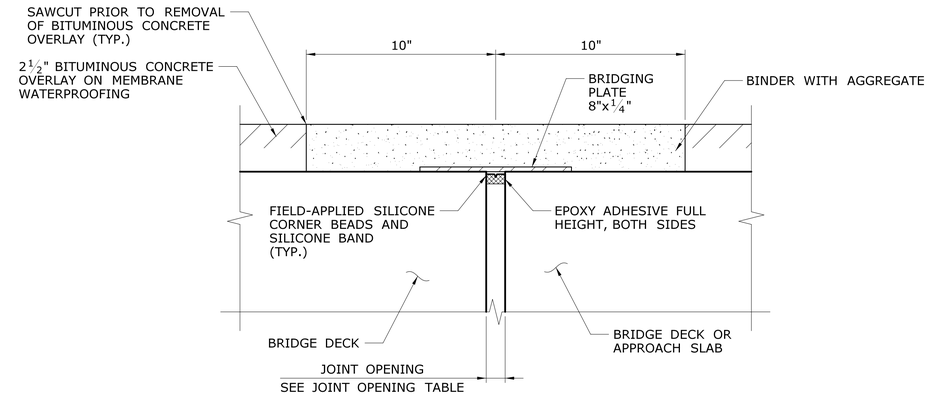

ASPHALTIC PLUG EXPANSION JOINT SYSTEM

SCALE: 3" = 1'-0"

JOINT OPENING TABLE												
PIER NUMBER	EXPANSION LENGTH	DECK OPENING (° F)										JOINT TYPE
		10°	20°	30°	40°	50°	60°	70°	80°	90°	100°	
1	210'	2.80"	2.63"	2.47"	2.31"	2.14"	1.98"	1.82"	1.65"	1.49"	1.33"	PREFORMED SILICONE
2, 4	175'	2.50"	2.37"	2.23"	2.09"	1.96"	1.82"	1.68"	1.55"	1.41"	1.27"	PREFORMED SILICONE
5, 6, 7, 8, ~~9~~, 29	87'	1.75"	1.68"	1.61"	1.54"	1.48"	1.41"	1.34"	1.27"	1.20"	1.14"	ASPHALTIC PLUG
11, 14	240'	3.06"	2.87"	2.68"	2.50"	2.31"	2.12"	1.94"	1.74"	1.56"	1.37"	PREFORMED SILICONE
18, 20, 22, 24, 26, 28	105'	1.90"	1.82"	1.74"	1.66"	1.57"	1.49"	1.41"	1.33"	1.25"	1.16"	ASPHALTIC PLUG
W ABUT., E ABUT., 12, 13, 15, 16, 17, 19, 21, 23, 25, 27	-	1"	1"	1"	1"	1"	1"	1"	1"	1"	1"	ASPHALTIC PLUG

PIER NUMBER	THERMAL MOVEMENT
W ABUT., E ABUT., 12, 15	0"
13, 16, 18, 20, 22, 24, 26, 28	0.25"
17, 19, 21, 23, 25, 27, 29	0.75"
5, 6, 7, 8	0.875"

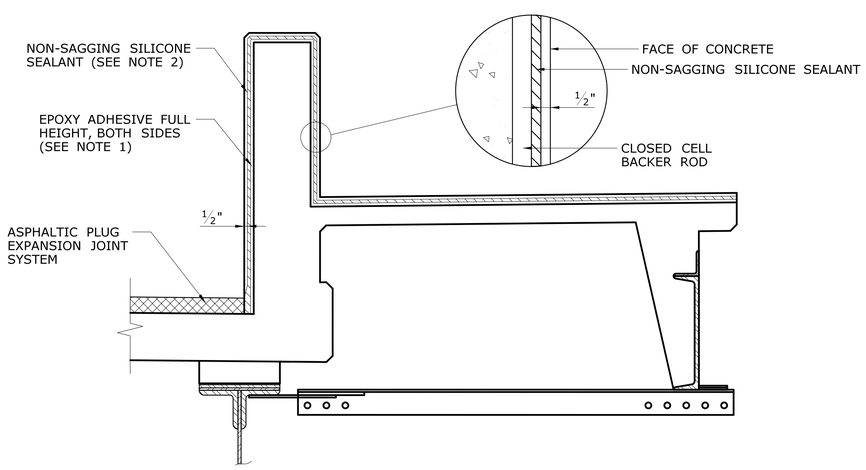

JOINT TYPE A
ASPHALTIC PLUG EXPANSION JOINT TREATMENT AT PARAPETS

SCALE: 1" = 1'-0"

NOTES:

1. THE EPOXY ADHESIVE FULL HEIGHT, BOTH SIDES SHALL BE PLACED A MINIMUM OF 2" FROM THE OUTSIDE FACE OF PARAPETS.
2. THE NON-SAGGING SILICONE SEALANT SHALL BE PLACED ON THE BACKER ROD ½" THICK. AT THE GUTTER, THE SILICONE SEALANT SHALL BE PLACED FLUSH WITH THE OUTSIDE FACE OF CONCRETE.
3. PRIOR TO INSTALLING THE SILICONE SEALANT, CLEAN JOINT SIDES BY SANDBLASTING. DUST SHALL BE REMOVED BY THE METHOD APPROVED BY THE ENGINEER. THIS WORK SHALL BE PAID FOR UNDER THE ITEM "ASPHALTIC PLUG EXPANSION JOINT SYSTEM" (SEE SPECIAL PROVISIONS).
4. PIER 9 JOINT TYPE WILL BE PREFORMED SILICONE JOINT IN ACCORDANCE TO S-107.

ADDENDUM NO. 3

REV.	DATE	REVISION DESCRIPTION	SHEET NO.
1	10/10/19	REVISED PIER 9 JOINT TYPE	01.04.105.A3

THE INFORMATION, INCLUDING ESTIMATED QUANTITIES OF WORK, SHOWN ON THESE SHEETS IS BASED ON LIMITED INVESTIGATIONS BY THE STATE AND IS IN NO WAY WARRANTED TO INDICATE THE CONDITIONS OF ACTUAL QUANTITIES OF WORK WHICH WILL BE REQUIRED.

Plotted Date: 10/10/2019

DESIGNER/DRAFTER: AJZ
CHECKED BY: RJE
SCALE AS NOTED

STATE OF CONNECTICUT
DEPARTMENT OF TRANSPORTATION

Filename: ...\S-105 (JOINT DETAILS - 1).dgn

SIGNATURE/BLOCK:

STV 100 Years
STV INCORPORATED
185 PLAINS ROAD, SUITE 208E
MILFORD, CT 06461
(203) 375-0521

PROJECT TITLE:
REHABILITATION OF THE APPROACH SPANS FOR ARRIGONI BRIDGE NO. 00524

TOWN: **MIDDLETOWN PORTLAND**

DRAWING TITLE: **JOINT DETAILS - 1**

PROJECT NO. **0082-0312**
DRAWING NO. **S-105**
SHEET NO. **01.04.105.A3**

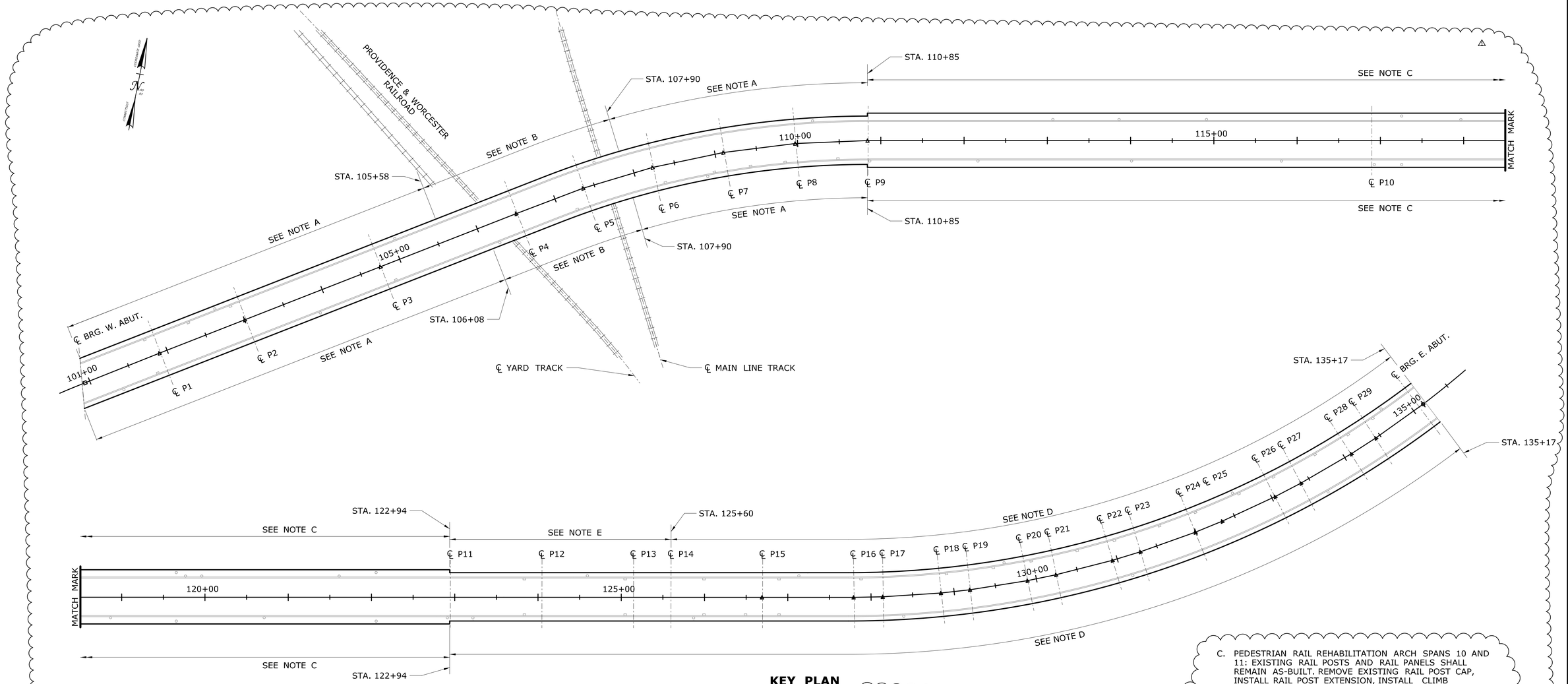

KEY PLAN

SCALE: 1" = 60'

NOTES:

A. PEDESTRIAN RAIL REHABILITATION SPANS 1 THRU 9 (UNLESS NOTED): REMOVE EXISTING RAIL POSTS AND RAIL PANELS IN THEIR ENTIRETY. RAIL POSTS SHALL BE DISPOSED OF BY THE CONTRACTOR. RAIL PANELS AND RAIL POST CAPS SHALL BE SALVAGED AND STORED BY THE CONTRACTOR AND RE-USED. INSTALL NEW RAIL POSTS (8'-0" PROJECTION ABOVE SIDEWALK GRADE) WITH EXISTING POST CAPS, INSTALL EXISTING RAIL PANELS TO NEW RAIL POSTS AND INSTALL CLIMB RESISTANT STEEL MESH FENCE. SEE DWG. NO. S-113 FOR DETAILS.

B. CURVED PEDESTRIAN RAIL FENCE REHABILITATION, & INSTALLATION. BEGIN AND END 25' MIN. FROM ℄ OF EXISTING P & W RAILROAD TRACKS BELOW: REMOVE EXISTING RAIL POSTS AND RAIL PANELS IN THEIR ENTIRETY. RAIL POSTS SHALL BE DISPOSED OF BY THE CONTRACTOR. RAIL PANELS AND RAIL POST CAPS SHALL BE SALVAGED AND STORED BY THE CONTRACTOR AND RE-USED. INSTALL NEW RAIL POSTS (12'-0" PROJECTION ABOVE SIDEWALK GRADE WITH CURVED TUBE POST ATTACHMENT), INSTALL EXISTING RAIL PANELS TO NEW RAIL POSTS AND INSTALL CLIMB RESISTANT STEEL MESH FENCE. SEE DWG. NO. S-117-1 FOR DETAILS. CURVED PORTION SHALL BE PAID FOR UNDER THE ITEM "PROTECTIVE FENCE".

C. PEDESTRIAN RAIL REHABILITATION ARCH SPANS 10 AND 11: EXISTING RAIL POSTS AND RAIL PANELS SHALL REMAIN AS-BUILT. REMOVE EXISTING RAIL POST CAP, INSTALL RAIL POST EXTENSION, INSTALL CLIMB RESISTANT STEEL MESH FENCE AND INSTALL EXISTING POST CAPS ON RAIL POST EXTENSIONS. SEE DWG NO. S-115 FOR DETAILS.

D. PEDESTRIAN RAIL REHABILITATION SPANS 12 THRU 30 (UNLESS NOTED): REMOVE EXISTING RAIL POSTS AND RAIL PANELS IN THEIR ENTIRETY. RAIL POSTS SHALL BE DISPOSED OF BY THE CONTRACTOR. RAIL PANELS AND RAIL POST CAPS SHALL BE SALVAGED AND STORED BY THE CONTRACTOR AND RE-USED. INSTALL NEW RAIL POSTS (8'-0" PROJECTION ABOVE SIDEWALK GRADE) WITH EXISTING POST CAPS, INSTALL EXISTING RAIL PANELS TO NEW RAIL POSTS AND INSTALL CLIMB RESISTANT STEEL MESH FENCE. SEE DWG. NO. S-113 FOR DETAILS.

E. PEDESTRIAN RAIL REHABILITATION SPANS 12, 13 AND 14 NORTH SIDE ONLY: REMOVE EXISTING RAIL POSTS, RAIL PANELS AND 12'-0" FENCE SECTIONS IN THEIR ENTIRETY. RAIL POSTS AND FENCE SECTIONS SHALL BE DISPOSED OF BY THE CONTRACTOR. RAIL PANELS AND RAIL POST CAPS SHALL BE SALVAGED AND STORED BY THE CONTRACTOR AND RE-USED. INSTALL NEW RAIL POSTS (12'-0" PROJECTION ABOVE SIDEWALK GRADE) WITH EXISTING POST CAPS, INSTALL EXISTING RAIL PANELS TO NEW RAIL POSTS AND INSTALL CLIMB RESISTANT STEEL MESH FENCE. SEE DWG NO. S-116 FOR DETAILS.

ADDENDUM NO. 3

REV.	DATE	REVISION DESCRIPTION	SHEET NO.
2	10/08/19	REVISED NOTES	01.04.110.A3
1	07/26/19	REVISED NOTES	01.04.110.A1

THE INFORMATION, INCLUDING ESTIMATED QUANTITIES OF WORK, SHOWN ON THESE SHEETS IS BASED ON LIMITED INVESTIGATIONS BY THE STATE AND IS IN NO WAY WARRANTED TO INDICATE THE CONDITIONS OF ACTUAL QUANTITIES OF WORK WHICH WILL BE REQUIRED.

Plotted Date: 10/10/2019

DESIGNER/DRAFTER: REM
CHECKED BY: RJE
SCALE AS NOTED

STATE OF CONNECTICUT
DEPARTMENT OF TRANSPORTATION

Filename: ...\S-110 (PEDESTRIAN RAIL KEY PLAN).dgn

SIGNATURE/BLOCK:

STV 100 Years
STV INCORPORATED
185 PLAINS ROAD, SUITE 208E
MILFORD, CT 06461
(203) 375-0521

PROJECT TITLE:
REHABILITATION OF THE APPROACH SPANS FOR ARRIGONI BRIDGE NO. 00524

TOWN: **MIDDLETOWN PORTLAND**

DRAWING TITLE: **PEDESTRIAN RAIL KEY PLAN**

PROJECT NO. 0082-0312
DRAWING NO. S-110
SHEET NO. 01.04.110.A3

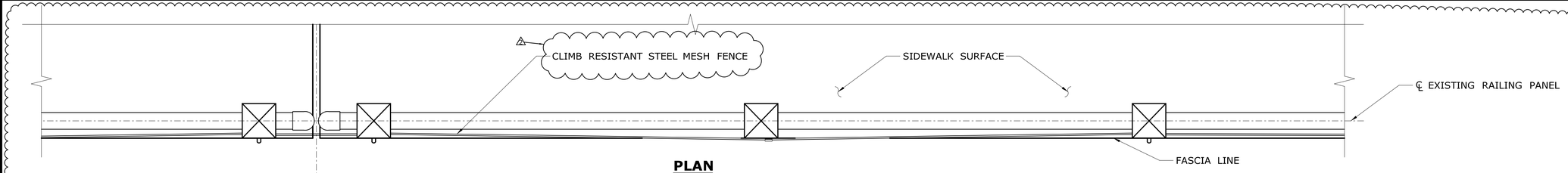

PLAN
SCALE: 1" = 1'-0"

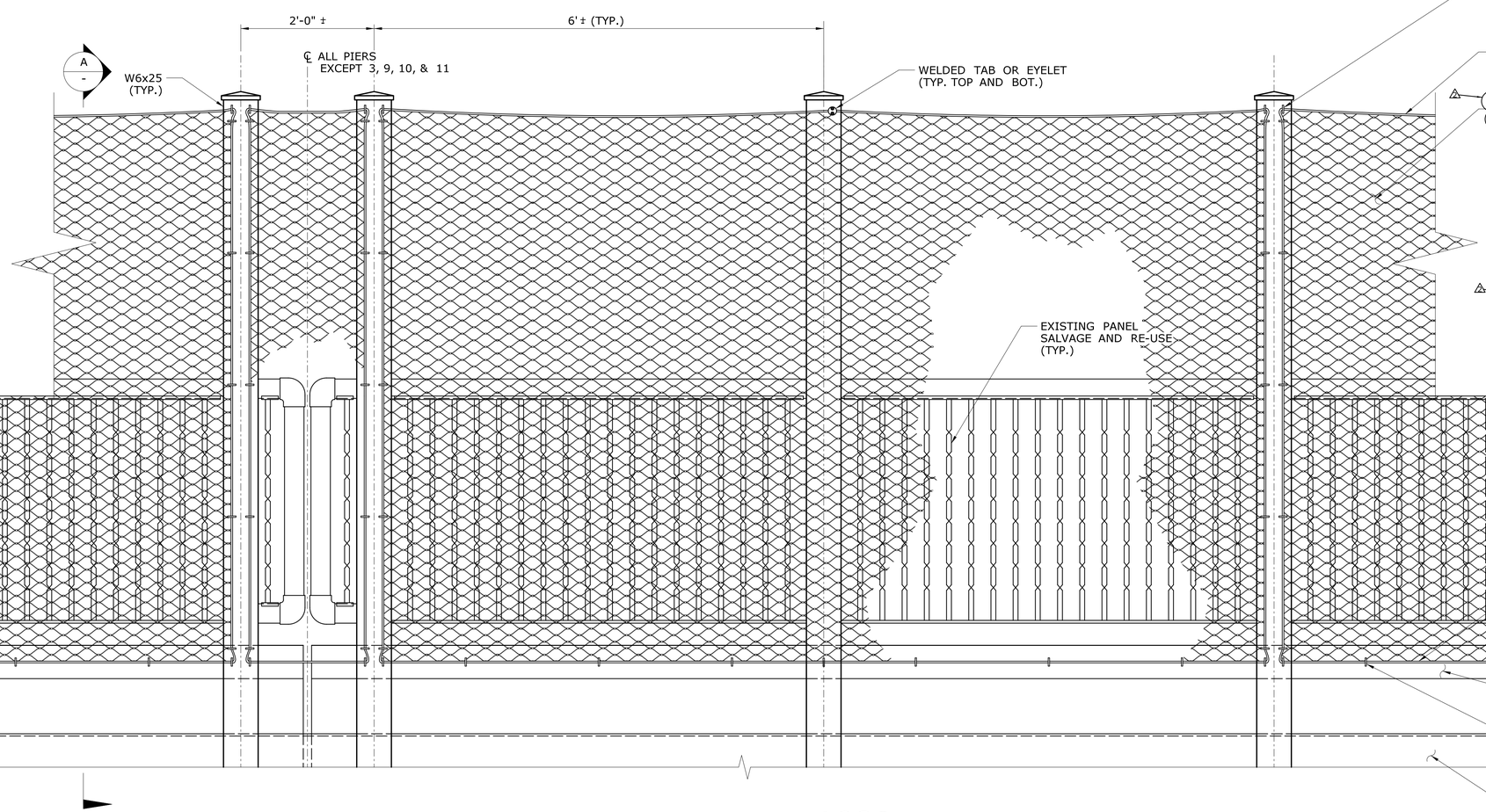

FASCIA SIDE ELEVATION VIEW
CLIMB RESISTANT STEEL MESH FENCE
ATTACHMENT TO PEDESTRIAN RAIL
SCALE: 1" = 1'-0"

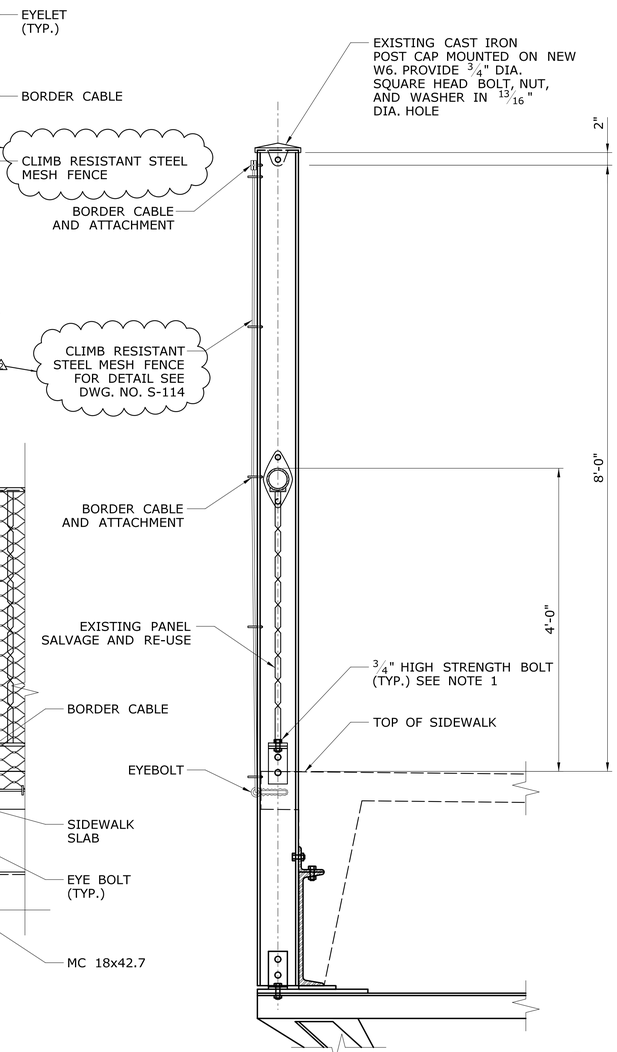

SECTION RAILING
SCALE: 1" = 1'-0"

A
-

NOTES:

1. ALL BOLTS FOR RAILINGS & POSTS SHALL BE NEW 3/4" ASTM F3125, GRADE A325 HIGH STRENGH BOLTS IN 13/16" HOLES, AND SHALL BE MECHANICALLY GALVANIZED.

ADDENDUM NO. 3

REV.	DATE	REVISION DESCRIPTION	SHEET NO.
2	10/08/19	REVISED CALLOUTS AND LABELS	01.04.113.A3
1	07/26/19	REVISED SHEET	01.04.113.A1

THE INFORMATION, INCLUDING ESTIMATED QUANTITIES OF WORK, SHOWN ON THESE SHEETS IS BASED ON LIMITED INVESTIGATIONS BY THE STATE AND IS IN NO WAY WARRANTED TO INDICATE THE CONDITIONS OF ACTUAL QUANTITIES OF WORK WHICH WILL BE REQUIRED.

Plotted Date: 10/8/2019

DESIGNER/DRAFTER: REM
CHECKED BY: RJE
SCALE AS NOTED

STATE OF CONNECTICUT
DEPARTMENT OF TRANSPORTATION

Filename: ..\S-113 (PEDESTRIAN RAIL DETAILS).dgn

SIGNATURE/BLOCK:

STV 100 Years
STV INCORPORATED
185 PLAINS ROAD, SUITE 208E
MILFORD, CT 06461
(203) 375-0521

PROJECT TITLE:
REHABILITATION OF THE APPROACH SPANS FOR ARRIGONI BRIDGE NO. 00524

TOWN: **MIDDLETOWN PORTLAND**

DRAWING TITLE: **PEDESTRIAN RAIL DETAILS**

PROJECT NO. **0082-0312**
DRAWING NO. **S-113**
SHEET NO. **01.04.113.A3**

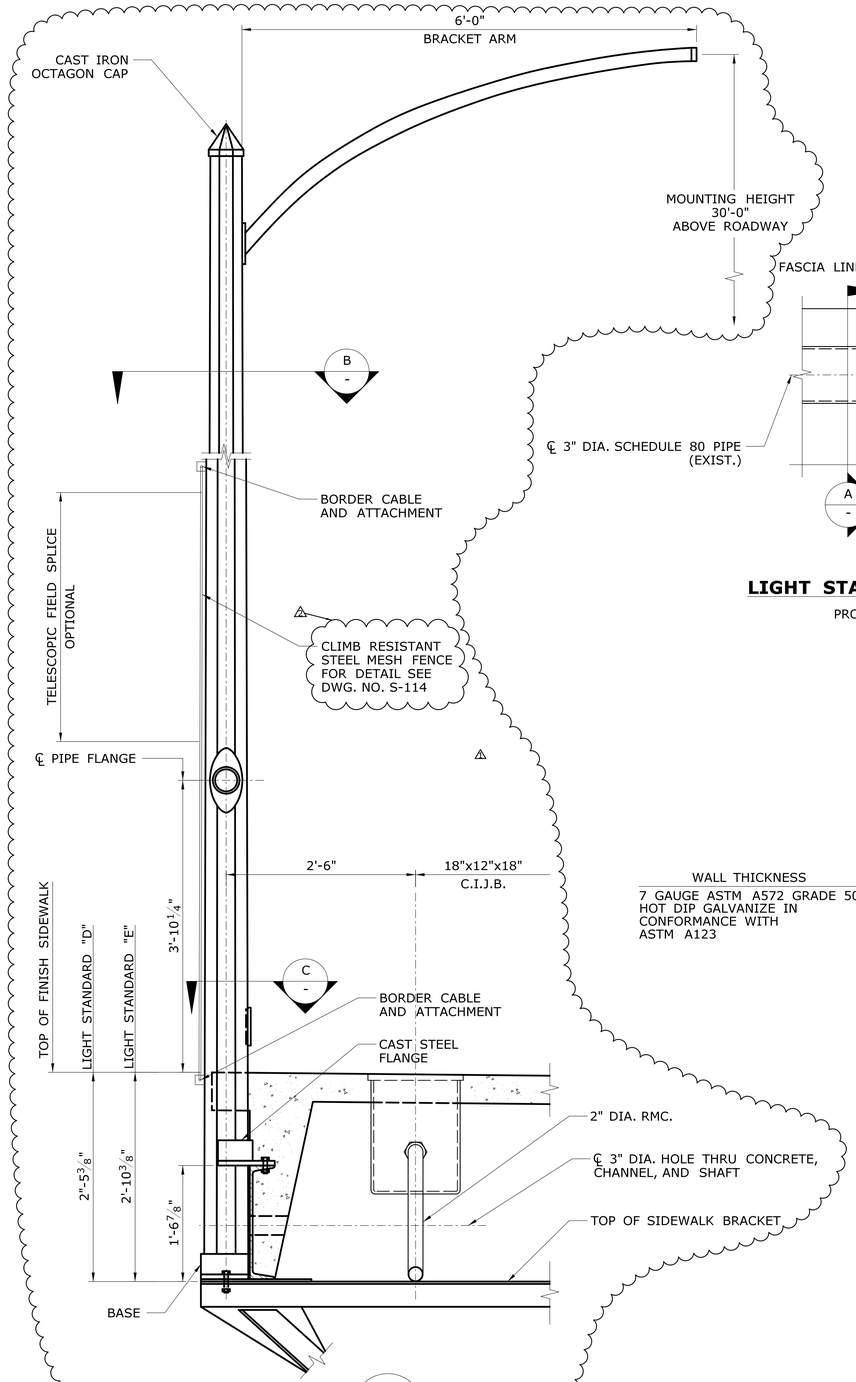

SECTION A
SCALE: 1" = 1'-0"

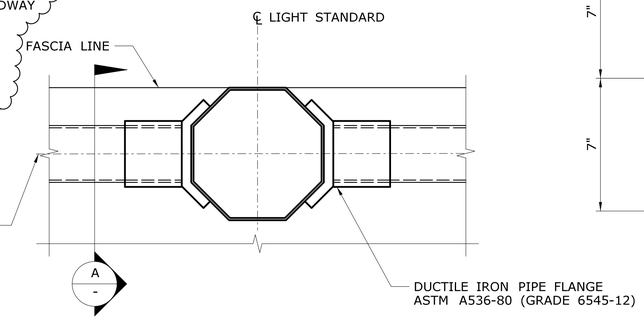

PLAN
LIGHT STANDARD SUPPORT APPROACH SPANS
PROTECTIVE FENCING NOT SHOWN FOR CLARITY
SCALE: 3" = 1'-0"

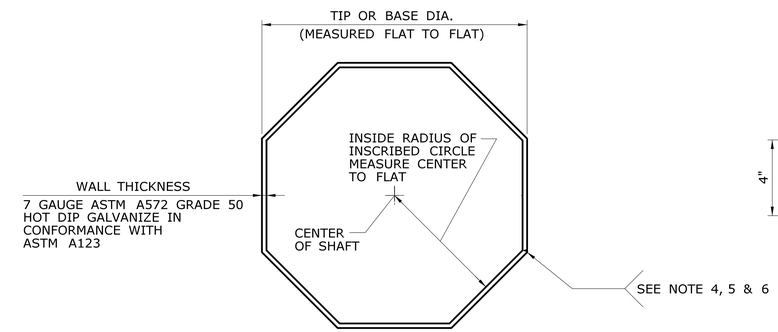

SECTION B
SCALE: 6" = 1'-0"

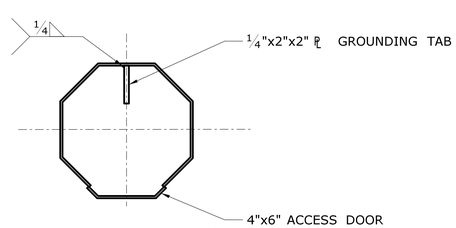

ACCESS DOOR PLAN C
SCALE: 6" = 1'-0"

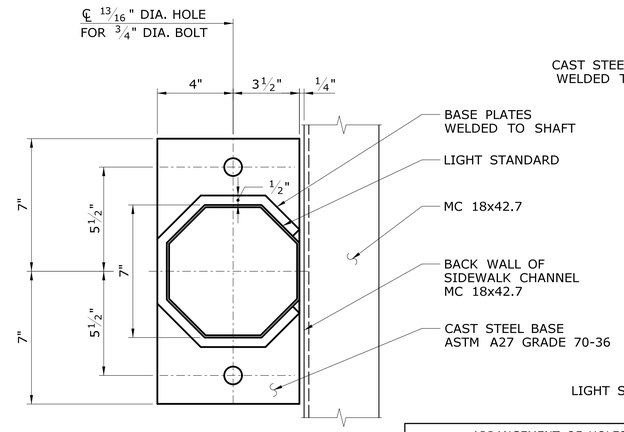

BASE PLAN
SCALE: 3" = 1'-0"

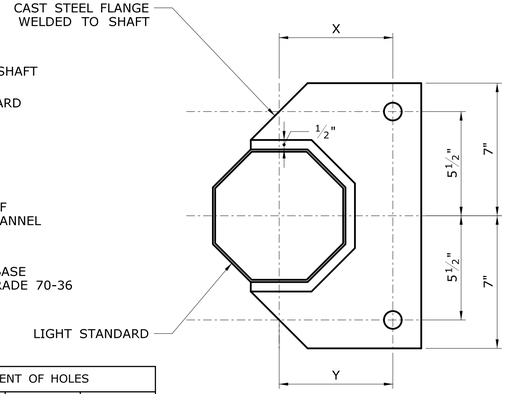

FLANGE PLAN
SCALE: 3" = 1'-0"

ARRANGEMENT OF HOLES		
LIGHT STANDARD	X	Y
D1, 2, 4, 5, 6	6"	6"
D3, 8	6"	5⅞"
D7	5⅞"	6"
E1, 2	6"	6 3/16"
E3	6⅛"	6"
E4	6"	6"

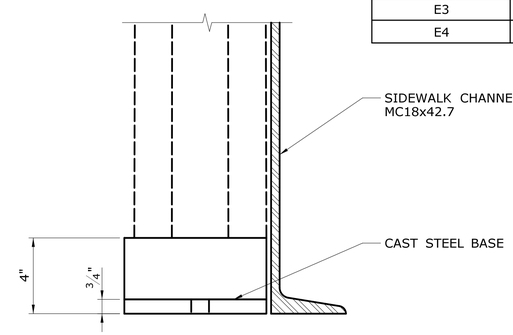

BASE ELEVATION
SCALE: 3" = 1'-0"

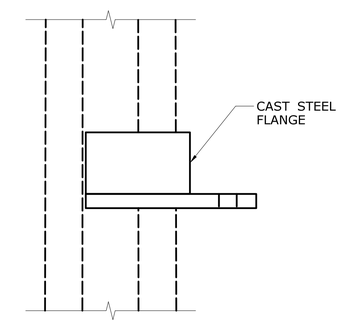

FLANGE ELEVATION
SCALE: 3" = 1'-0"

LIGHT STANDARD DETAILS

NOTES:

1. BRIDGE MOUNTED LIGHT STANDARDS SHALL BE PAID FOR UNDER THE ITEM, "DECORATIVE LIGHT STANDARD"
2. SEE SUBSET 06 FOR ILLUMINATION DETAILS.
3. LIGHT STANDARDS SHALL BE 8-SIDED WITH THE DIAMETER CHANGING AT A RATE OF 0.14 INCH PER FOOT.
4. LONGITUDINAL SEAM WELDS SHALL BE PARTIAL PENETRATION 0.6x WALL EXCEPT AS NOTED BELOW.
5. LONGITUDINAL SEAM WELDS WITHIN 6 IN. OF CIRCUMFERENTIAL WELDS SHALL BE COMPLETE PENETRATION.
6. LONGITUDINAL SEAM WELDS AT TELESCOPIC FIELD SPLICES SHALL BE COMPLETE PENETRATION SPLICE LENGTH PLUS 6 IN.
7. FOR LOCATION OF LIGHT STANDARDS SEE DWG. NO. S-66. AND S-67.

ADDENDUM NO. 3

REV.	DATE	REVISION DESCRIPTION	SHEET NO.
2	10/08/19	REVISED CALLOUT	01.04.114.A3
1	07/26/19	REVISED SHEET	01.04.114.A1

THE INFORMATION, INCLUDING ESTIMATED QUANTITIES OF WORK, SHOWN ON THESE SHEETS IS BASED ON LIMITED INVESTIGATIONS BY THE STATE AND IS IN NO WAY WARRANTED TO INDICATE THE CONDITIONS OF ACTUAL QUANTITIES OF WORK WHICH WILL BE REQUIRED.

Plotted Date: 10/8/2019

DESIGNER/DRAFTER: REM
CHECKED BY: RJE
SCALE AS NOTED

STATE OF CONNECTICUT
DEPARTMENT OF TRANSPORTATION

Filename: ...\S-114 (LIGHT STANDARD SUPPORT).dgn

SIGNATURE/BLOCK:

STV INCORPORATED
185 PLAINS ROAD, SUITE 208E
MILFORD, CT 06461
(203) 375-0521

PROJECT TITLE:
REHABILITATION OF THE APPROACH SPANS FOR ARRIGONI BRIDGE NO. 00524

TOWN: **MIDDLETOWN PORTLAND**

DRAWING TITLE: **LIGHT STANDARD SUPPORT**

PROJECT NO. 0082-0312
DRAWING NO. S-114
SHEET NO. 01.04.114.A3

NOTES:

1. THE CLIMB RESISTANT STEEL MESH FENCE DETAIL IS INTENDED TO CONVEY THE APPROXIMATE CLIMB RESISTANT STEEL MESH FENCE DIMENSIONS. THE MANUFACTURER OF THE CABLE MESH SHALL PROVIDE A STANDARD CATALOGUE PRODUCT. THE MAXIMUM OPENING IN THE CLIMB RESISTANT STEEL MESH FENCE SHALL RESTRICT THE PASSAGE OF A 4 INCH DIAMETER SPHERE.
2. ALL CLIMB RESISTANT STEEL MESH FENCE COMPONENTS SHALL BE TYPE 316 STAINLESS STEEL.

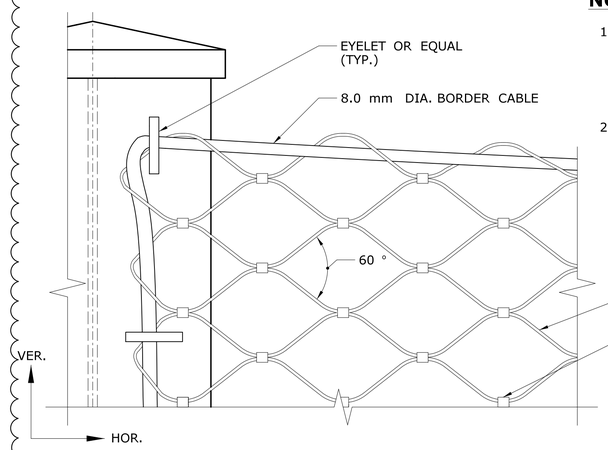

CLIMB RESISTANT STEEL MESH FENCE DETAIL
SCALE: 6" = 1'-0"

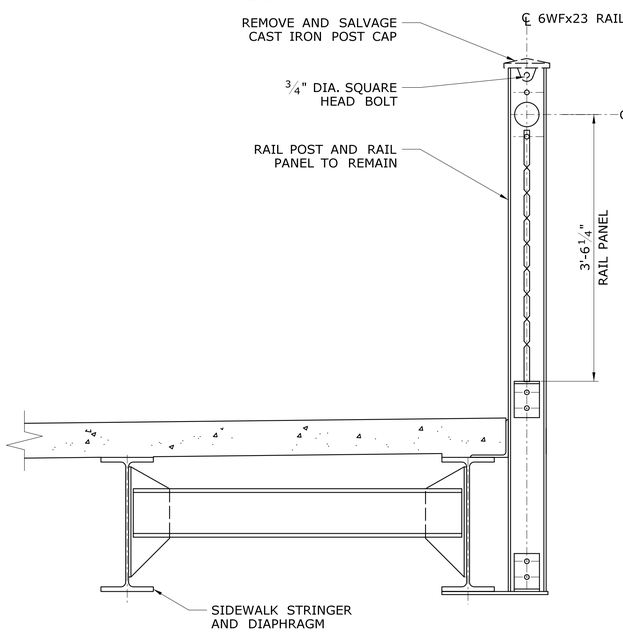

EXISTING
SCALE: 1" = 1'-0"

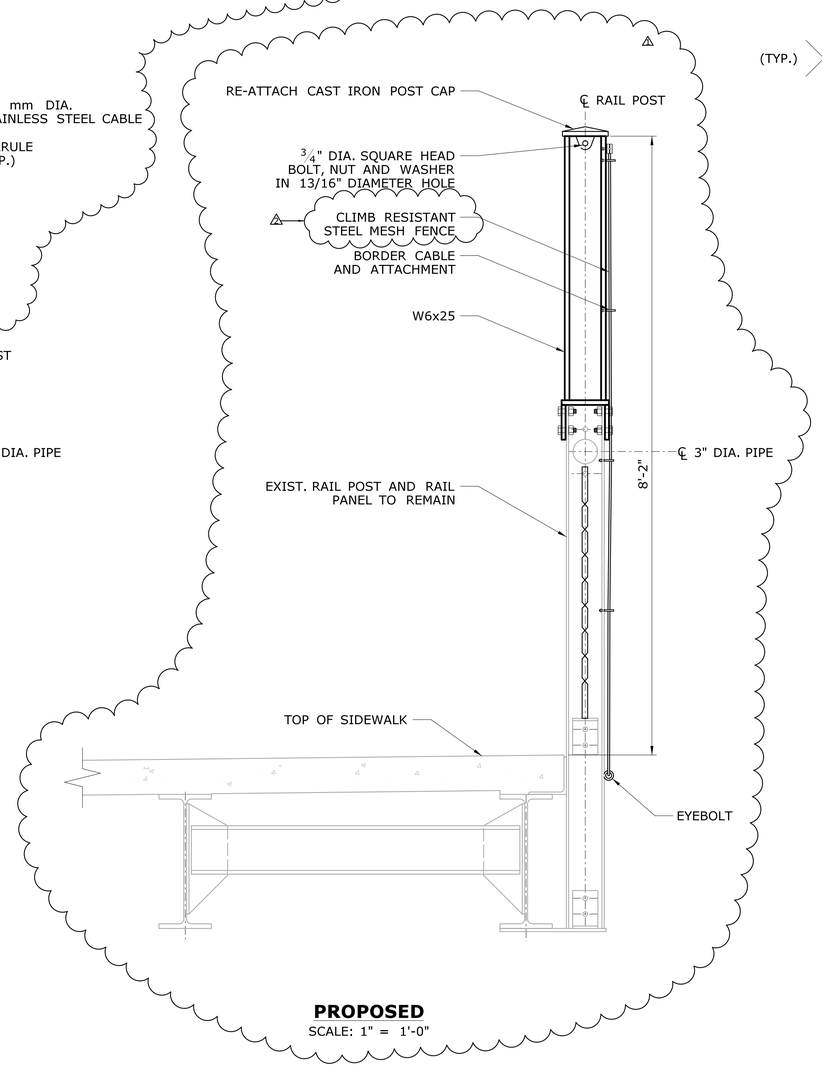

PROPOSED
SCALE: 1" = 1'-0"

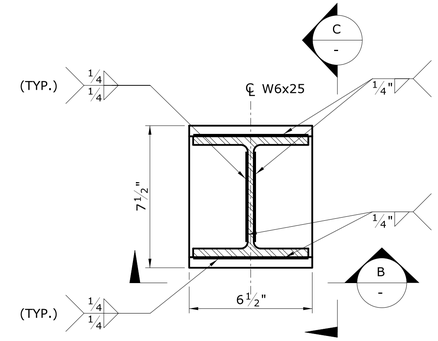

SECTION A
SCALE: 3" = 1'-0"

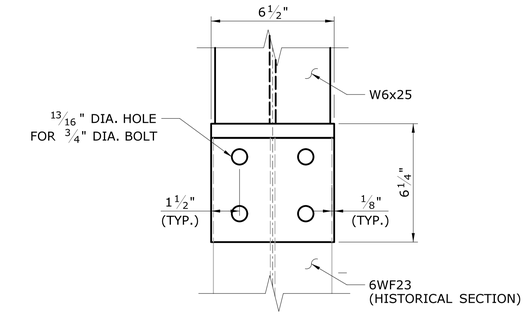

SECTION B
SCALE: 3" = 1'-0"

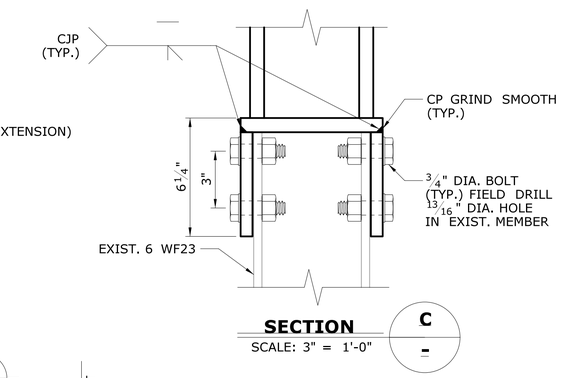

SECTION C
SCALE: 3" = 1'-0"

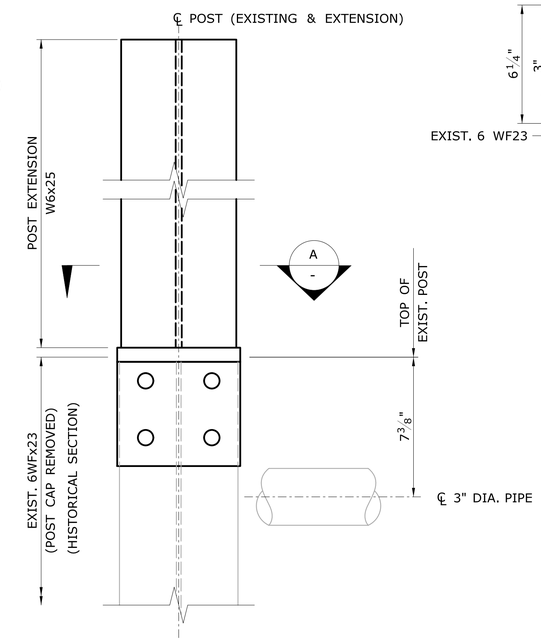

SPAN 10 & 11
RAIL POST EXTENSION
SCALE: 3" = 1'-0"

TYPICAL SIDEWALK SECTION SPANS 10 & 11

ADDENDUM NO. 3

REV.	DATE	REVISION DESCRIPTION	SHEET NO.
2	10/08/19	REVISED FENCE CALLOUTS	01.04.115.A3
1	07/26/19	REVISED SHEET	01.04.115.A1

THE INFORMATION, INCLUDING ESTIMATED QUANTITIES OF WORK, SHOWN ON THESE SHEETS IS BASED ON LIMITED INVESTIGATIONS BY THE STATE AND IS IN NO WAY WARRANTED TO INDICATE THE CONDITIONS OF ACTUAL QUANTITIES OF WORK WHICH WILL BE REQUIRED.

Plotted Date: 10/9/2019

DESIGNER/DRAFTER: REM
CHECKED BY: RJE
SCALE AS NOTED

STATE OF CONNECTICUT
DEPARTMENT OF TRANSPORTATION

Filename: ...\S-115 (ARCH SPAN POST DETAILS).dgn

SIGNATURE/BLOCK:

STV 100 Years
STV INCORPORATED
185 PLAINS ROAD, SUITE 208E
MILFORD, CT 06461
(203) 375-0521

PROJECT TITLE:
REHABILITATION OF THE APPROACH SPANS FOR ARRIGONI BRIDGE NO. 00524

TOWN: **MIDDLETOWN PORTLAND**

DRAWING TITLE: **ARCH SPAN POST DETAILS**

PROJECT NO. 0082-0312
DRAWING NO. S-115
SHEET NO. 01.04.115.A3

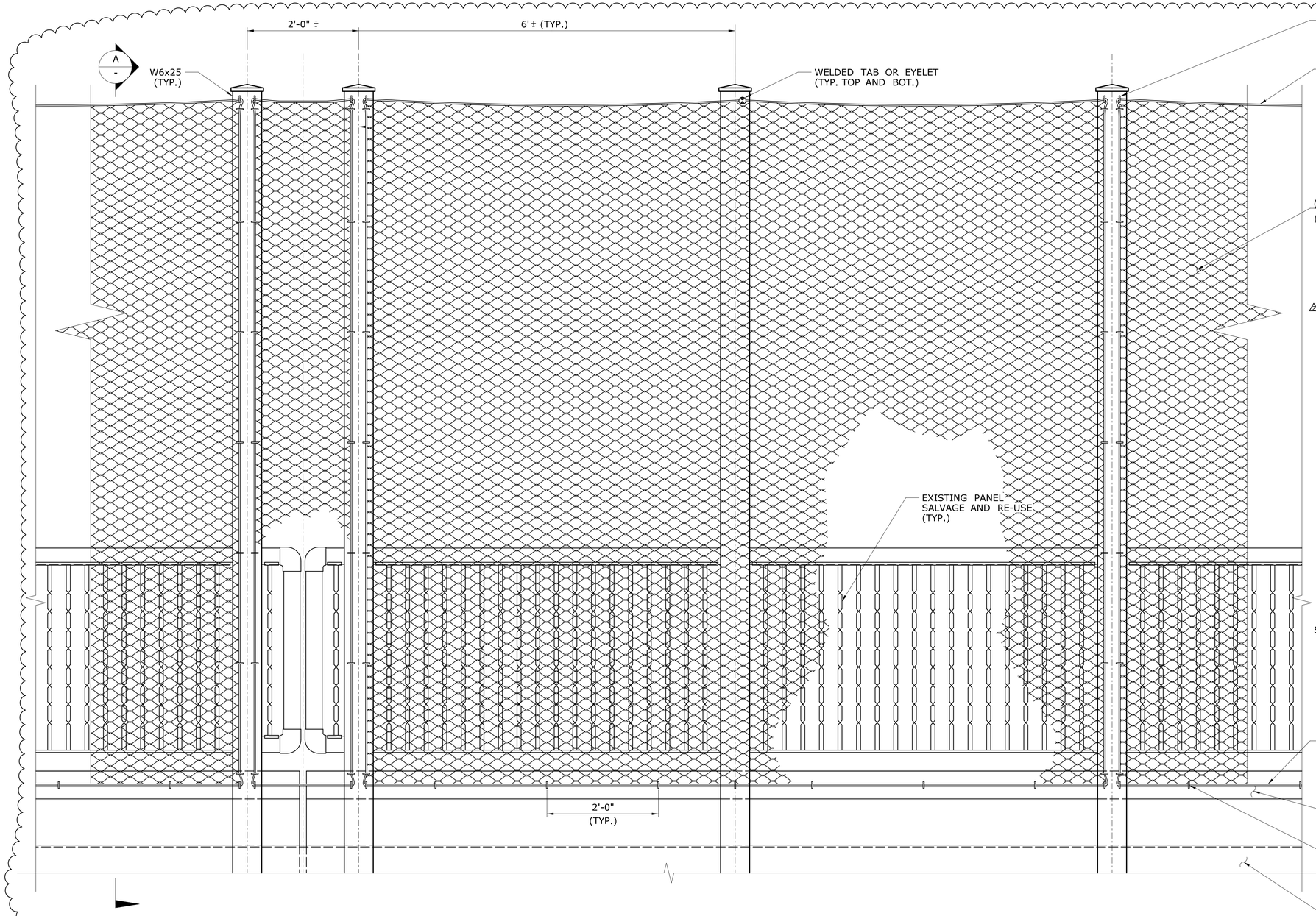

FASCIA SIDE ELEVATION VIEW SPANS 12 THRU 14
CLIMB RESISTANT STEEL MESH ATTACHMENT TO PEDESTRIAN RAIL
SCALE: 1" = 1'-0"

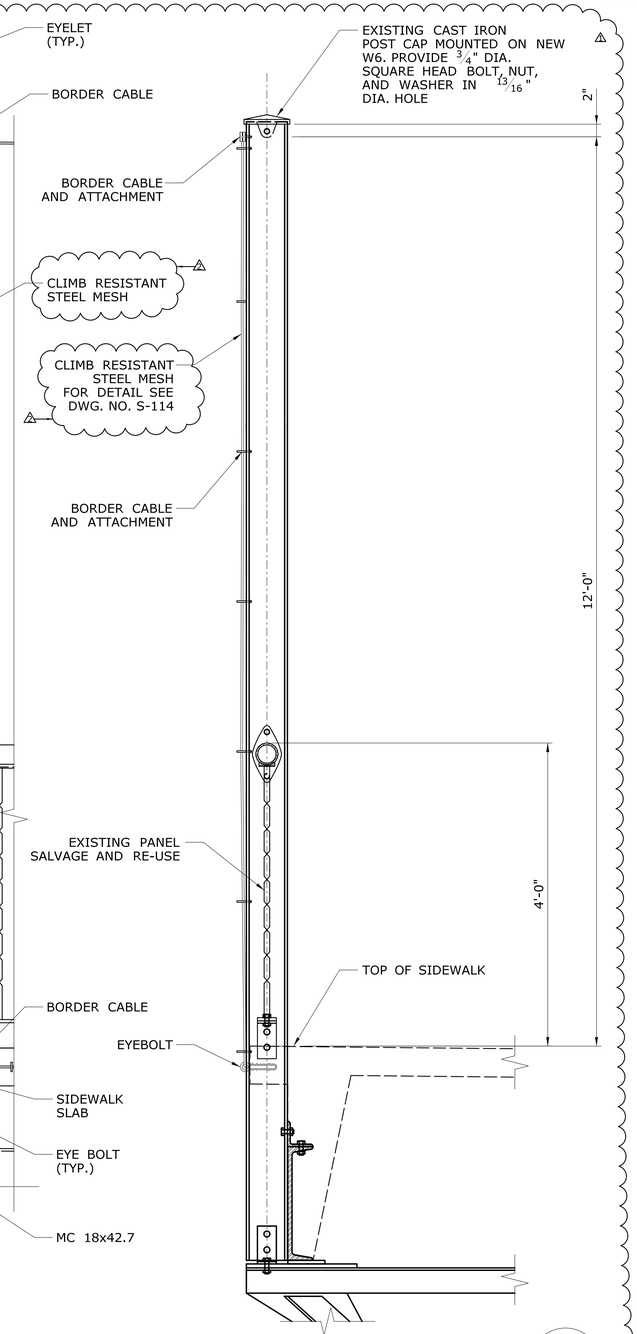

SECTION RAILING
SCALE: 1" = 1'-0"

A
-

ADDENDUM NO. 3

REV.	DATE	REVISION DESCRIPTION	SHEET NO.
2	10/08/19	REVISED FENCE CALLOUTS	01.04.116.A3
1	07/26/19	REVISED SHEET	01.04.116.A1

THE INFORMATION, INCLUDING ESTIMATED QUANTITIES OF WORK, SHOWN ON THESE SHEETS IS BASED ON LIMITED INVESTIGATIONS BY THE STATE AND IS IN NO WAY WARRANTED TO INDICATE THE CONDITIONS OF ACTUAL QUANTITIES OF WORK WHICH WILL BE REQUIRED.

Plotted Date: 10/9/2019

DESIGNER/DRAFTER: REM
CHECKED BY: RJE
SCALE AS NOTED

STATE OF CONNECTICUT
DEPARTMENT OF TRANSPORTATION

Filename: ..\S-116 (PROPOSED RAILING DETAILS).dgn

SIGNATURE/BLOCK:

STATE OF CONNECTICUT
#12175
LICENSED PROFESSIONAL ENGINEER

STV 100 Years
STV INCORPORATED
185 PLAINS ROAD, SUITE 208E
MILFORD, CT 06461
(203) 375-0521

PROJECT TITLE:
REHABILITATION OF THE APPROACH SPANS FOR ARRIGONI BRIDGE NO. 00524

TOWN:
MIDDLETOWN PORTLAND

DRAWING TITLE:
PROPOSED RAILING DETAILS

PROJECT NO. **0082-0312**
DRAWING NO. **S-116**
SHEET NO. **01.04.116.A3**

NOTES:

1. FENCE BRACING REQUIREMENTS SHALL BE PROVIDED BY THE CONTRACTOR.
2. 12 FT. FENCE SHOWN IN SECTION. 8 FT. FENCE SECTION SIMILAR.
3. FENCE BRACING WILL NOT BE MEASURED FOR PAYMENT. THE COST SHALL BE INCIDENTAL TO THE CLIMB RESISTANT STEEL MESH FENCE.

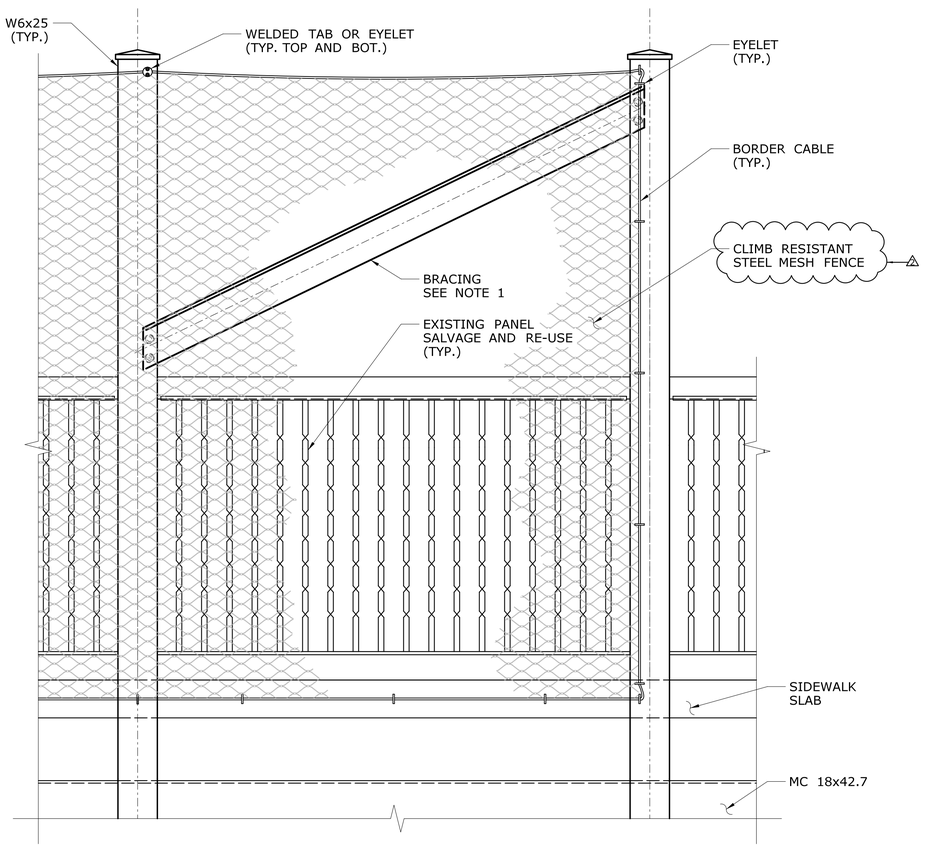

8' PEDESTRIAN FENCE

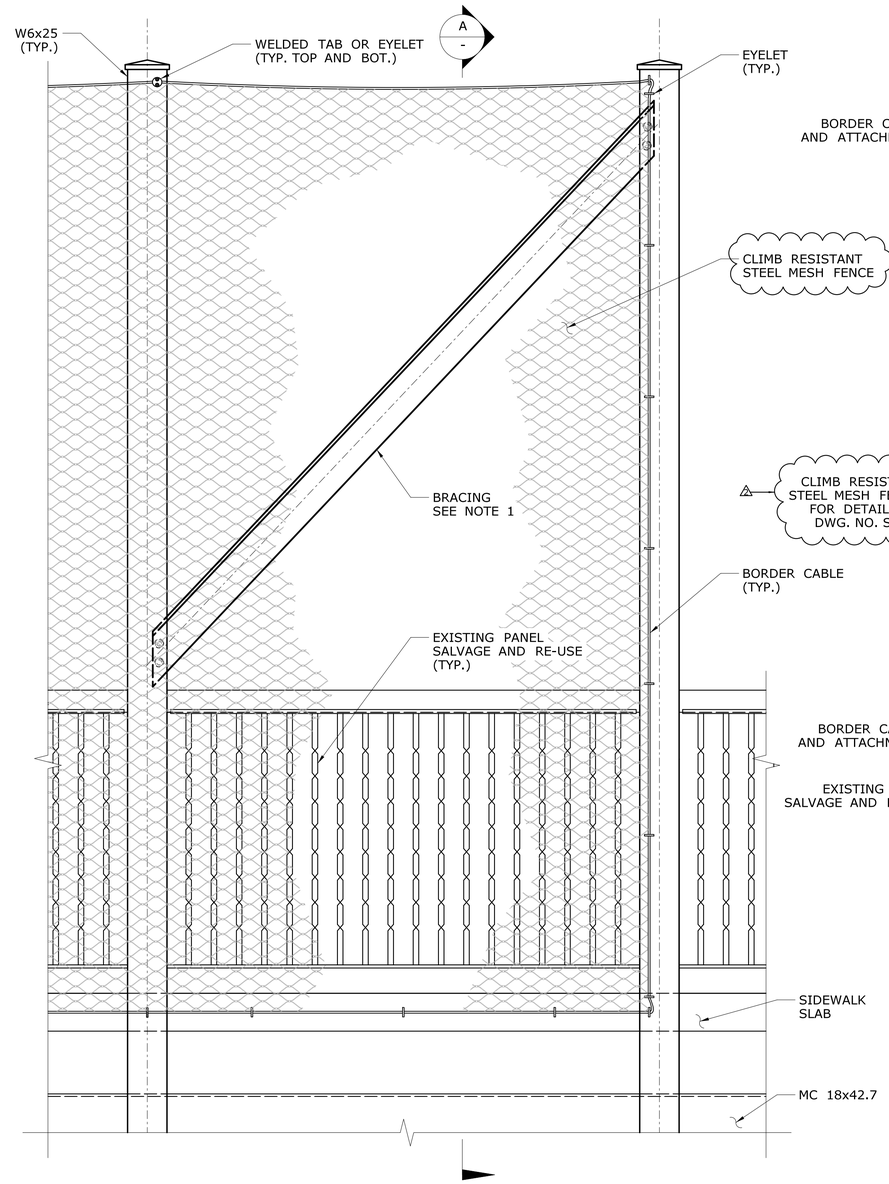

12' PEDESTRIAN FENCE

BRACING DETAIL
CLIMB RESISTANT STEEL MESH FENCE
SCALE: 1" = 1'-0"

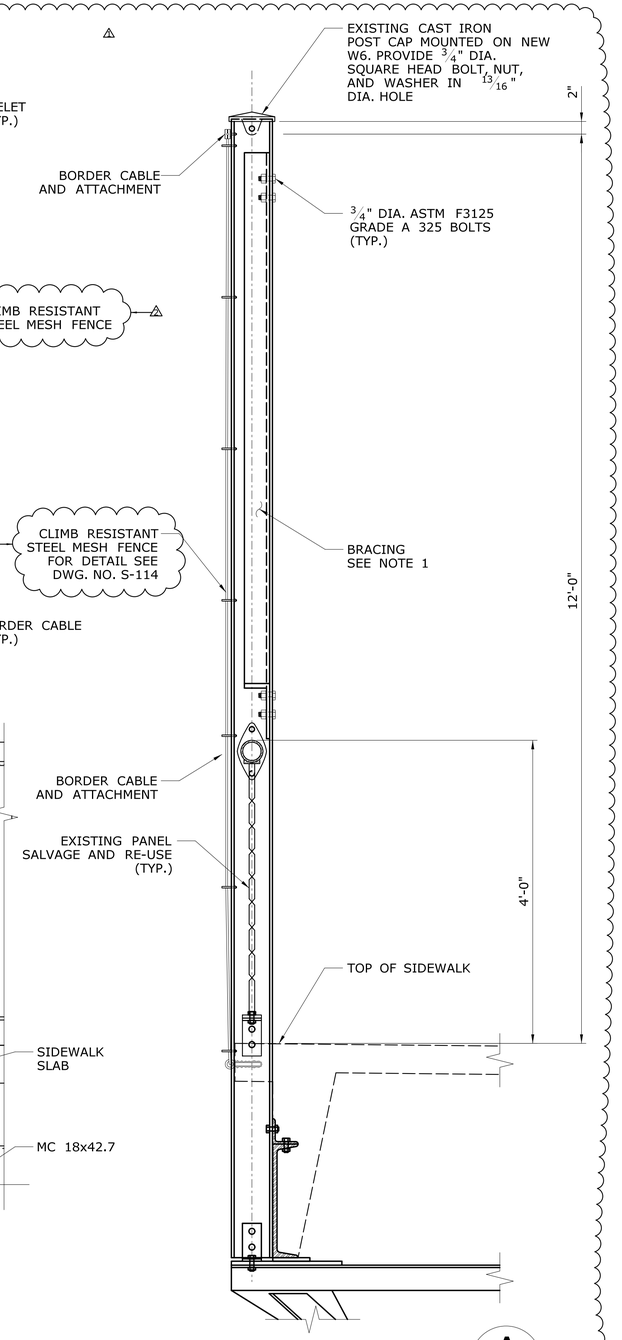

SECTION
SCALE: 1" = 1'-0"
A
-

ADDENDUM NO. 3

REV.	DATE	REVISION DESCRIPTION	SHEET NO.
2	10/08/19	REVISED FENCE CALLOUTS	01.04.117.A3
1	07/26/19	REVISED SHEET	01.04.117.A1

THE INFORMATION, INCLUDING ESTIMATED QUANTITIES OF WORK, SHOWN ON THESE SHEETS IS BASED ON LIMITED INVESTIGATIONS BY THE STATE AND IS IN NO WAY WARRANTED TO INDICATE THE CONDITIONS OF ACTUAL QUANTITIES OF WORK WHICH WILL BE REQUIRED.

Plotted Date: 10/10/2019

DESIGNER/DRAFTER: REM
CHECKED BY: RJE
SCALE AS NOTED

STATE OF CONNECTICUT
DEPARTMENT OF TRANSPORTATION

Filename: ...\S-117 (PROPOSED RAILING END DETAILS).dgn

SIGNATURE/BLOCK:

STV 100 Years
STV INCORPORATED
185 PLAINS ROAD, SUITE 208E
MILFORD, CT 06461
(203) 375-0521

PROJECT TITLE:
REHABILITATION OF THE APPROACH SPANS FOR ARRIGONI BRIDGE NO. 00524

TOWN:
MIDDLETOWN PORTLAND

DRAWING TITLE:
PROPOSED RAILING END DETAILS

PROJECT NO. 0082-0312
DRAWING NO. S-117
SHEET NO. 01.04.117.A3

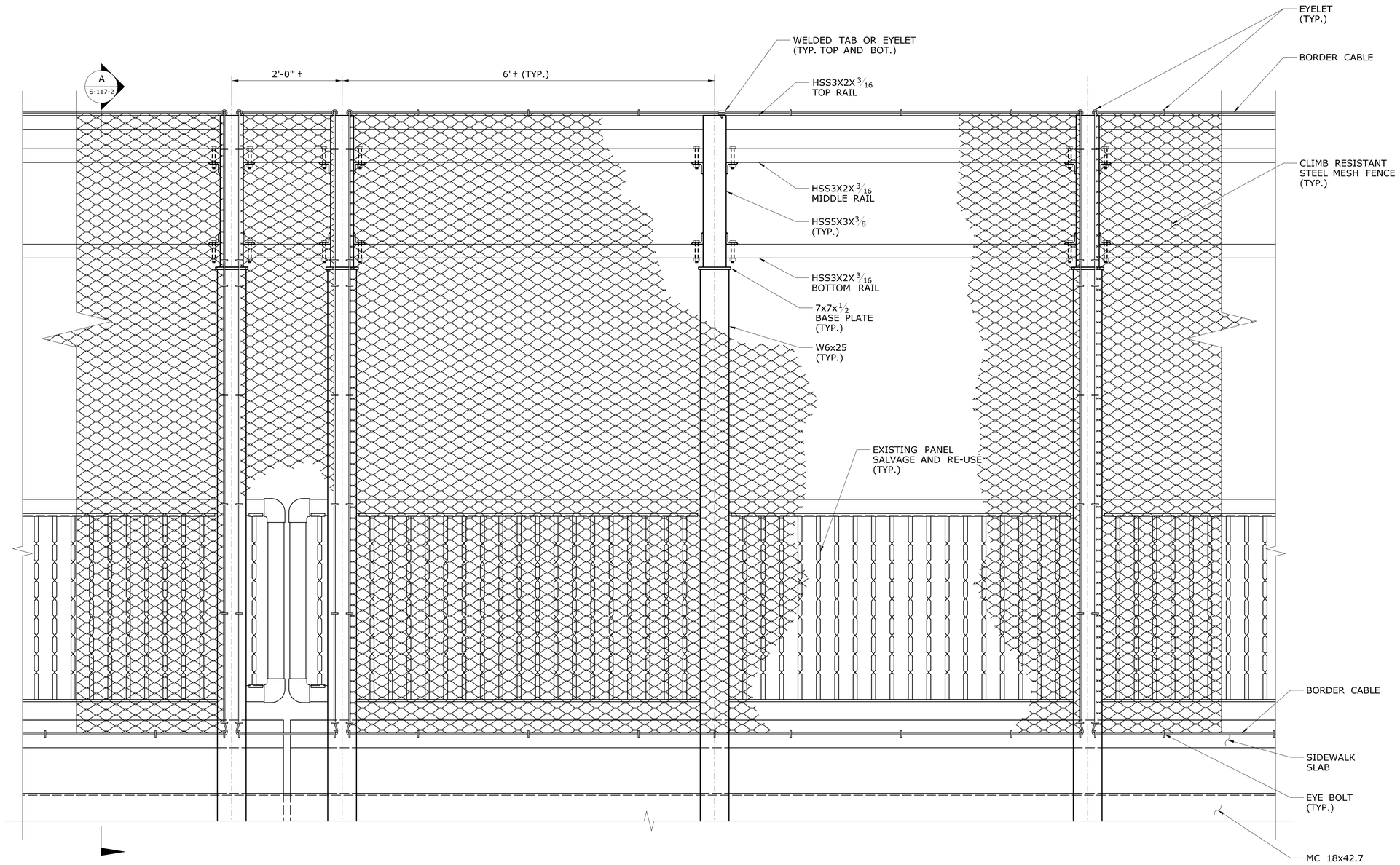

FASCIA SIDE ELEVATION VIEW
CLIMB RESISTANT STEEL MESH FENCE ATTACHMENT TO PEDESTRIAN RAIL
SCALE: 1" = 1'-0"

NOTE:

1. THE DETAILS SHOWN APPLY FROM STA. 105+58 TO STA. 107+90 LEFT, AND STA. 106+08 TO STA. 107+90 RIGHT, AND ARE APPROXIMATE. THE EXACT LIMITS SHALL BE DETERMINED IN THE FIELD BY THE ENGINEER.

ADDENDUM NO. 3

REV.	DATE	REVISION DESCRIPTION	SHEET NO.
1	10/08/19	REVISED FENCE CALLOUT	01.04.117-1.A3

THE INFORMATION, INCLUDING ESTIMATED QUANTITIES OF WORK, SHOWN ON THESE SHEETS IS BASED ON LIMITED INVESTIGATIONS BY THE STATE AND IS IN NO WAY WARRANTED TO INDICATE THE CONDITIONS OF ACTUAL QUANTITIES OF WORK WHICH WILL BE REQUIRED.

Plotted Date: 10/9/2019

DESIGNER/DRAFTER: REM
CHECKED BY: RJE
SCALE AS NOTED

STATE OF CONNECTICUT
DEPARTMENT OF TRANSPORTATION

Filename: ...\S-117-1 (CURVED PEDESTRIAN RAIL FENCE DETAILS -1).dgn

SIGNATURE/BLOCK:

STV 100 Years
STV INCORPORATED
185 PLAINS ROAD, SUITE 208E
MILFORD, CT 06461
(203) 375-0521

PROJECT TITLE:
REHABILITATION OF THE APPROACH SPANS FOR ARRIGONI BRIDGE NO. 00524

TOWN:
MIDDLETOWN PORTLAND

DRAWING TITLE:
CURVED PEDESTRIAN RAIL FENCE DETAILS - 1

PROJECT NO. 0082-0312
DRAWING NO. S-117-1
SHEET NO. 01.04.117-1.A3

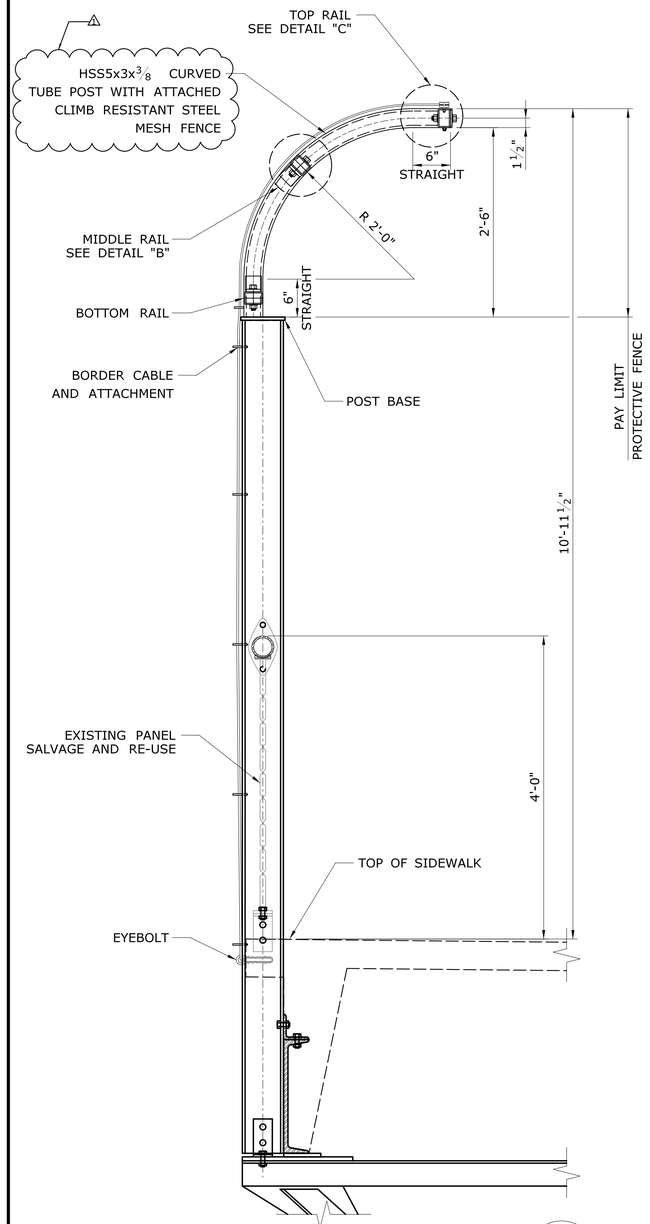

SECTION RAILING
SCALE: 1" = 1'-0"

A
-

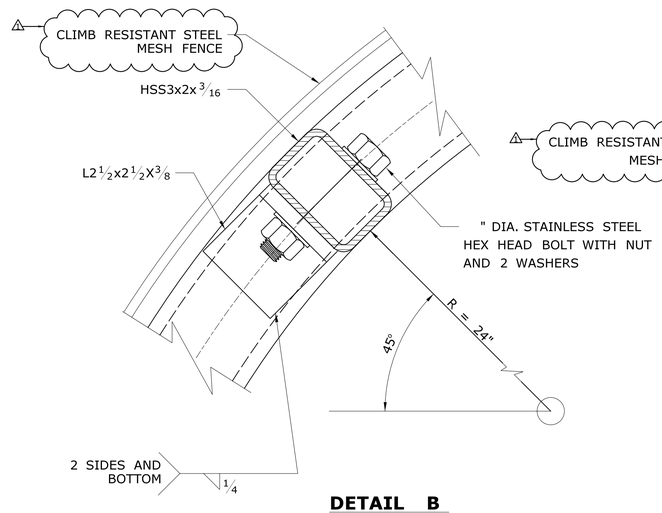

DETAIL B
SCALE: 6" = 1'-0"

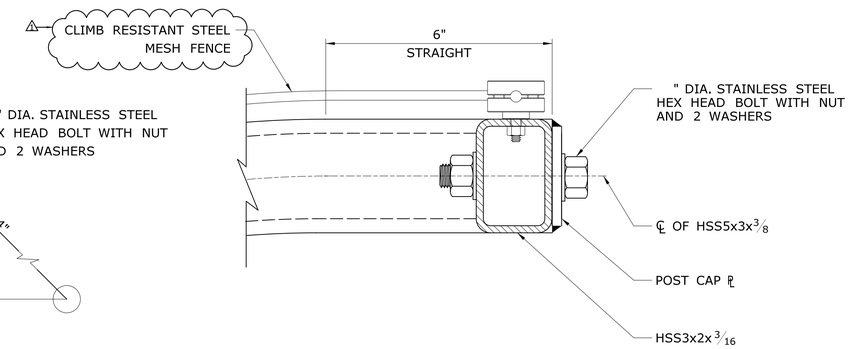

DETAIL C
SCALE: 6" = 1'-0"

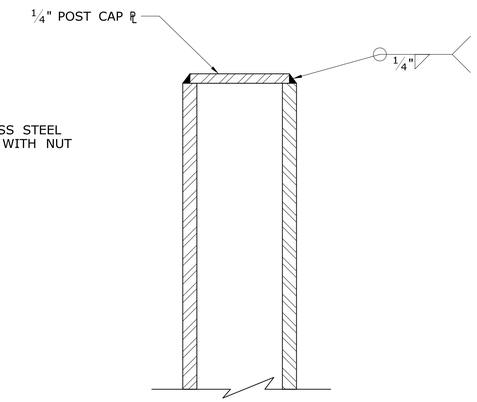

SECTION
SCALE: 6" = 1'-0"

D
-

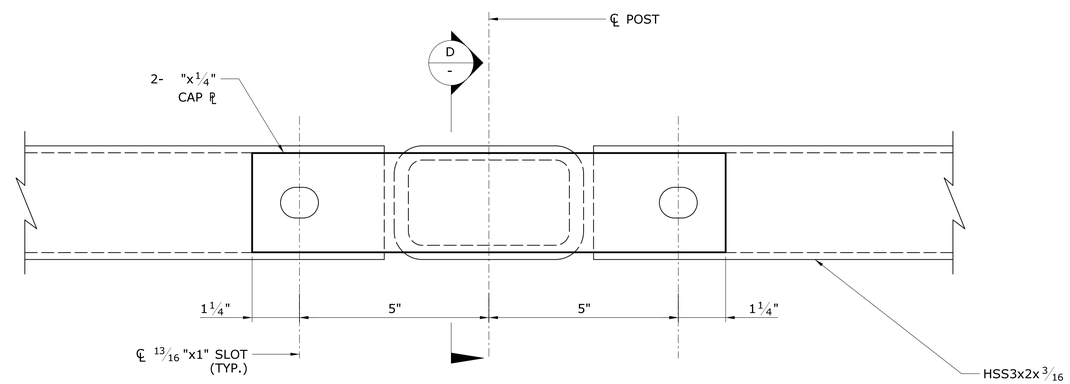

POST CAP DETAIL
SCALE: 6" = 1'-0"

NOTES:

1. FOR LOCATION OF THE CURVED PEDESTRIAN RAIL FENCE SEE DWG. NO. S-110.
2. FOR MATERIAL DESIGNATIONS SEE SPECIAL PROVISIONS "PROTECTIVE FENCE".
3. THE RAILING POSTS, RAILS AND HARDWARE SHALL BE PAID FOR UNDER THE ITEM "PROTECTIVE FENCE".
4. CABLE MESH AND ATTACHMENT HARDWARE SHALL BE PAID FOR UNDER THE ITEM "CLIMB RESISTANT STEEL MESH FENCE"

ADDENDUM NO. 3

REV.	DATE	REVISION DESCRIPTION	SHEET NO.
1	10/08/19	REVISED FENCE CALLOUTS AND NOTES	01.04.117-2.A3

THE INFORMATION, INCLUDING ESTIMATED QUANTITIES OF WORK, SHOWN ON THESE SHEETS IS BASED ON LIMITED INVESTIGATIONS BY THE STATE AND IS IN NO WAY WARRANTED TO INDICATE THE CONDITIONS OF ACTUAL QUANTITIES OF WORK WHICH WILL BE REQUIRED.

Plotted Date: 10/9/2019

DESIGNER/DRAFTER: REM
CHECKED BY: RJE
SCALE AS NOTED

STATE OF CONNECTICUT
DEPARTMENT OF TRANSPORTATION

Filename: ...\S-117-2 (CURVED PEDESTRIAN RAIL FENCE DETAILS -2).dgn

SIGNATURE/BLOCK:
STATE OF CONNECTICUT STEVEN C. SHERMAN 31217 LICENSED PROFESSIONAL ENGINEER

STV 100 Years
STV INCORPORATED
185 PLAINS ROAD, SUITE 208E
MILFORD, CT 06461
(203) 375-0521

PROJECT TITLE:
REHABILITATION OF THE APPROACH SPANS FOR ARRIGONI BRIDGE NO. 00524

TOWN:
MIDDLETOWN PORTLAND

DRAWING TITLE:
CURVED PEDESTRIAN RAIL FENCE DETAILS - 2

PROJECT NO. 0082-0312
DRAWING NO. S-117-2
SHEET NO. 01.04.117-2.A3