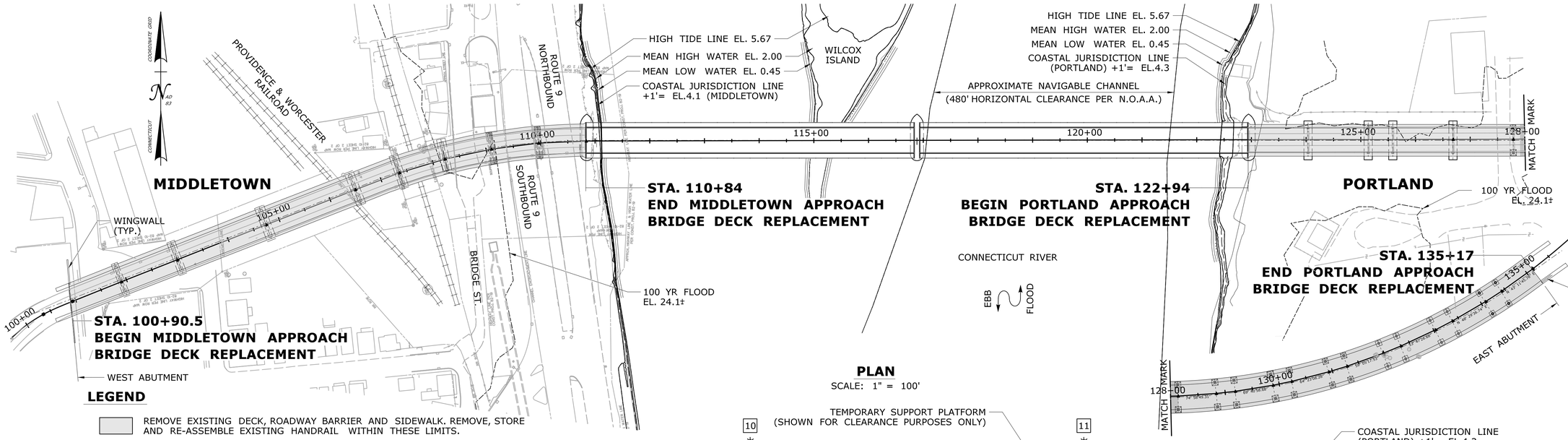

PLAN

SCALE: 1" = 100'

LEGEND

REMOVE EXISTING DECK, ROADWAY BARRIER AND SIDEWALK. REMOVE, STORE AND RE-ASSEMBLE EXISTING HANDRAIL WITHIN THESE LIMITS.

(X) DENOTES PIER NO.

[Y] DENOTES SPAN NO.

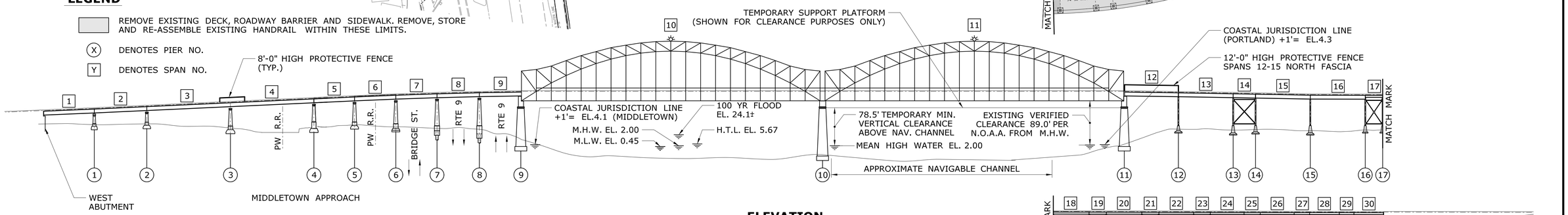

ELEVATION

SCALE: 1" = 100'

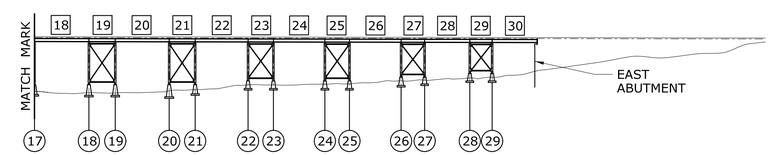

PORTLAND APPROACH

GENERAL NOTES

SPECIFICATIONS: CONNECTICUT DEPARTMENT OF TRANSPORTATION FORM 817 (2016), SUPPLEMENTAL SPECIFICATION DATED JULY 2018 AND SPECIAL PROVISIONS.

DESIGN SPECIFICATIONS: LRFD AASHTO BRIDGE DESIGN SPECIFICATIONS SEVENTH EDITION (2014), WITH THE INTERIM SPECIFICATIONS UP TO AND INCLUDING 2016, AS SUPPLEMENTED BY THE CONNECTICUT DEPARTMENT OF TRANSPORTATION BRIDGE DESIGN MANUAL (2003) UPDATED AS OF FEBRUARY 2011.
WELDING SHALL CONFORM TO THE REQUIREMENTS OF AWS D1.5/1.1 LATEST EDITION.

ALLOWABLE DESIGN STRESSES:

PARAPET CONCRETE	f'_c = 4000 PSI
BRIDGE SIDEWALK CONCRETE	f'_c = 4000 PSI
STRUCTURAL REPAIR CONCRETE	f'_c = 3000 PSI
ULTRA HIGH PERFORMANCE CONCRETE (UHPC)	f'_c = 20000 PSI △1
REINFORCEMENT (ASTM A615 GRADE 60)	f_y = 60000 PSI
STRUCTURAL STEEL (AASHTO M270, GRADE 50W)	f_y = 50000 PSI

LIVE LOAD: HS-20

FUTURE PAVING ALLOWANCE: NONE

STRUCTURAL STEEL: SEE STRUCTURE SHEET NOTES FOR DESIGNATIONS AND REQUIREMENTS.

BITUMINOUS CONCRETE OVERLAY: THIS SHALL CONSIST OF TWO LIFTS. THE FIRST SHALL BE ¾" HMA S0.25(TRAFFIC LEVEL 2) AND THE SECOND SHALL BE 1¾" HMA S0.5 (TRAFFIC LEVEL 2).

CLEARING AND GRUBBING: REQUIRED TO ACCESS THE BASE OF PIERS 3 - 9, OR AS DIRECTED BY THE ENGINEER.

DIMENSIONS: WHEN DECIMAL DIMENSIONS ARE GIVEN TO LESS THAN THREE DECIMAL PLACES, THE OMITTED DIGITS SHALL BE ASSUMED TO BE ZEROS.

EXISTING DIMENSIONS: DIMENSIONS OF THE EXISTING STRUCTURE SHOWN ON THESE PLANS ARE FOR GENERAL REFERENCE ONLY. THEY HAVE BEEN TAKEN FROM THE ORIGINAL DESIGN DRAWINGS AND ARE NOT GUARANTEED. THE CONTRACTOR SHALL TAKE ALL FIELD MEASUREMENTS NECESSARY TO ASSURE PROPER FIT OF THE FINISHED WORK AND SHALL ASSUME FULL RESPONSIBILITY FOR THEIR ACCURACY. WHEN SHOP DRAWINGS BASED ON FIELD MEASUREMENTS ARE SUBMITTED FOR APPROVAL, THE FIELD MEASUREMENTS SHALL ALSO BE SUBMITTED FOR REFERENCE BY THE REVIEWER

EXISTING PLANS: BRIDGE NO. 00524 WAS ORIGINALLY CONSTRUCTED UNDER CONTRACT NO. 82-016 DATED 1936. SUBSEQUENT REPAIRS AND MODIFICATIONS TO THE BRIDGE ARE AS FOLLOWS:

PROJECT NO. 82-137 DATED 1965 - ROADWAY ILLUMINATION IMPROVEMENTS
PROJECT NO. 82-153 DATED 1977 - SUBSTRUCTURE REPAIRS, JOINT REPAIRS, DRAINAGE IMPROVEMENTS, CURB AND SIDEWALK IMPROVEMENTS
PROJECT NO. 82-223 DATED 1988 - SUBSTRUCTURE REPAIRS, STEEL REPAIRS, REPLACEMENT OF ARCH SPAN SUSPENDERS, INSTALLATION OF MAIN SPANS CATWALK, JOINT REPAIRS, DRAINAGE IMPROVEMENTS, MAIN SPAN BARRIER CURB AND PARTIAL SIDEWALK REPLACEMENT
PROJECT NO. 82-252 DATED 1993 - HAUNCH REPAIRS, JOINT REPAIRS, INSTALLATION OF BIRD NETTING, DRAINAGE IMPROVEMENTS AND PAINTING OF STRUCTURAL STEEL
PROJECT NO. 82-300 DATED 2008 - INSTALLATION OF INCIDENT MANAGEMENT SYSTEM AND LANE USE SIGNALS
PROJECT NO. 82-299 DATED 2011 - REPLACEMENT OF MAIN SPAN GRID DECK, STRINGERS, SIDEWALK AND ROADWAY BARRIER; MAIN SPAN RAILING REPAIRS; APPROACH SPAN SIDEWALK REPAIR AND MILLING AND OVERLAY OF APPROACH SPANS

RAILROAD: WORK WITHIN THE RAILROAD RIGHT OF WAY SHALL BE IN CONFORMANCE WITH PROVIDENCE & WORCESTER RAILROAD'S SPECIFICATIONS, WHICH IS INCLUDED IN NOTICE TO CONTRACTOR "PROVIDENCE & WORCESTER RAILROAD SPECIFICATIONS". ANY TEMPORARY RAILROAD CROSSINGS REQUIRED TO ACCESS THE BRIDGE PIERS ON THE MIDDLETOWN APPROACH SHALL BE COORDINATED WITH THE RAILROAD.

INSPECTION OF FIELD WELDS

METHOD	UNIT	QUANTITY
ULTRASONIC	INCH	0
MAGNETIC PARTICLE	FEET	0

CONCRETE DISTRIBUTION

LOCATION	UNIT	QUANTITY
SUBSTRUCTURE	CY	11
SUPERSTRUCTURE	CY	1,610
TOTAL	CY	1,621

SHIPPING DATA

MEMBER	MAX SHIPPING LENGTH	MAX SHIPPING HEIGHT	MAX SHIPPING WIDTH	MAX SHIPPING WEIGHT
DECK PANEL	20'-0"	12"	9'-0"	10,000 LB ±
STRINGER				

NOTICE TO BRIDGE INSPECTORS

THE DEPARTMENT'S BRIDGE SAFETY PROCEDURES REQUIRE THIS BRIDGE TO BE INSPECTED FOR, BUT NOT LIMITED TO, ALL APPROPRIATE COMPONENTS INDICATED IN THE GOVERNING MANUALS FOR BRIDGE INSPECTION. ATTENTION MUST BE GIVEN TO INSPECTING THE FOLLOWING SPECIAL COMPONENTS AND DETAILS. (THE LISTING FOR COMPONENTS FOR SPECIFIC ATTENTION SHALL NOT BE CONSTRUED TO REDUCE THE IMPORTANCE OF INSPECTION OF ANY OTHER COMPONENT OF THE STRUCTURE.) THE FREQUENCY OF INSPECTION OF THIS STRUCTURE SHALL BE IN ACCORDANCE WITH THE GOVERNING MANUALS FOR BRIDGE INSPECTION. UNLESS OTHERWISE DIRECTED BY THE MANAGER OF BRIDGE SAFETY AND EVALUATION.

COMPONENT OR DETAIL	STRUCTURE SHEET REFERENCE
NONE	

STV Incorporated
185 Plains Road
Suite 208E
Milford, CT 06461

Jim Sherwonit
2019.08.07
10:04:31-04'00'

ADDENDUM NO. 1

REV.	DATE	REVISION DESCRIPTION	SHEET NO.
1	07/26/19	REVISED SHEET	01.04.003.A1

THE INFORMATION, INCLUDING ESTIMATED QUANTITIES OF WORK, SHOWN ON THESE SHEETS IS BASED ON LIMITED INVESTIGATIONS BY THE STATE AND IS IN NO WAY WARRANTED TO INDICATE THE CONDITIONS OF ACTUAL QUANTITIES OF WORK WHICH WILL BE REQUIRED.

Plotted Date: 8/1/2019

DESIGNER/DRAFTER: JV
CHECKED BY: RJE
SCALE AS NOTED

STATE OF CONNECTICUT
DEPARTMENT OF TRANSPORTATION

Filename: ...\S-03 (GENERAL PLAN).dgn

SIGNATURE/BLOCK:

STV 100 Years
STV INCORPORATED
185 PLAINS ROAD, SUITE 208E
MILFORD, CT 06461
(203) 375-0521

PROJECT TITLE:
REHABILITATION OF THE APPROACH SPANS FOR ARRIGONI BRIDGE NO. 00524

TOWN: **MIDDLETOWN PORTLAND**

DRAWING TITLE: **GENERAL PLAN**

PROJECT NO. **0082-0312**
DRAWING NO. **S-03**
SHEET NO. **01.04.003.A1**

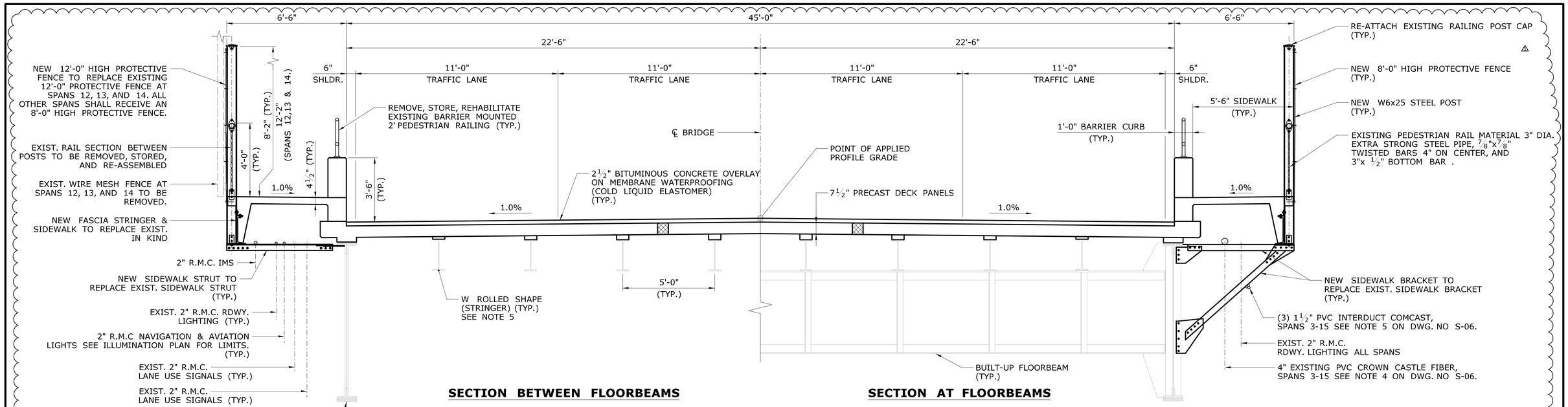

SECTION BETWEEN FLOORBEAMS **SECTION AT FLOORBEAMS**

NORMAL SECTION APPROACH SPANS

STA. 101+90 TO 106+51 (MIDDLETOWN) STA. 122+94 TO 126+69 (PORTLAND)

SCALE: 3/8" = 1'-0"

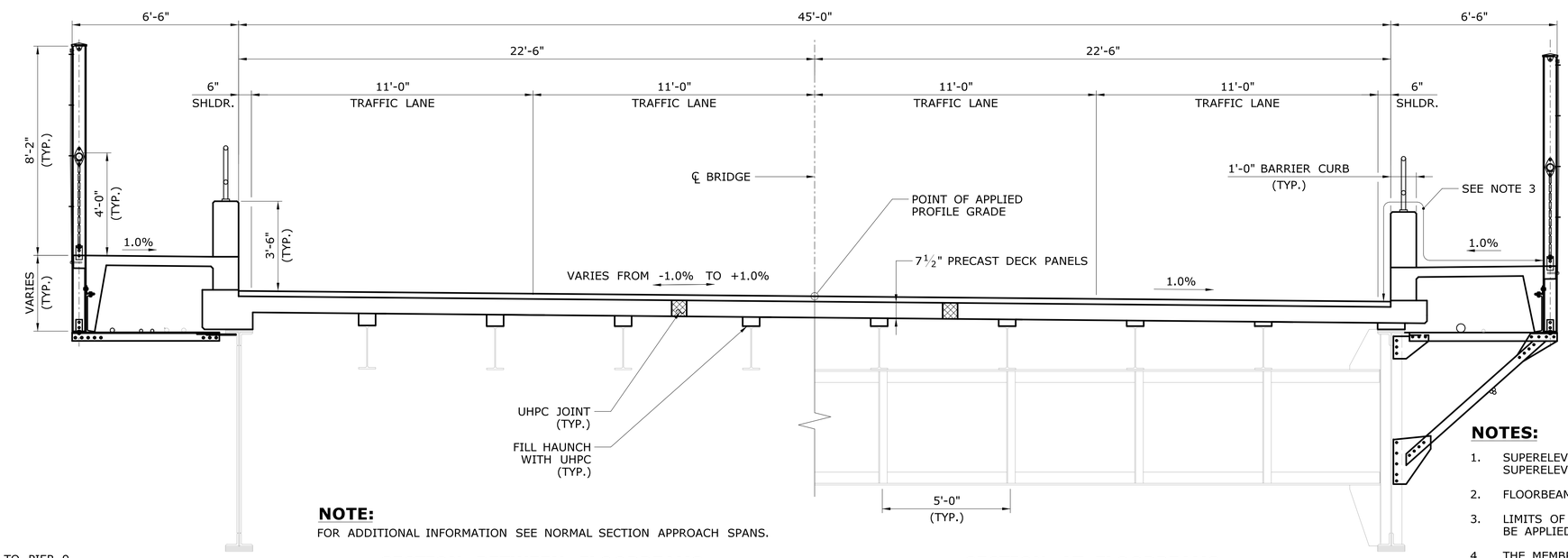

NOTE:

FOR ADDITIONAL INFORMATION SEE NORMAL SECTION APPROACH SPANS.

SECTION BETWEEN FLOORBEAMS **SECTION AT FLOORBEAMS**

SUPERELEVATION SECTION APPROACH SPANS

STA. 100+94 TO 101+90 & STA. 106+51 TO 110+84 (MIDDLETOWN) STA. 127+73 TO 135+14 (PORTLAND)

SCALE: 3/8" = 1'-0"

LANE USE SIGNALS

2" R.M.C. FROM PIER 7 TO PIER 9

2 1/2" R.M.C. FROM PIER 7 TO PIER 9 AND FROM PIER 11 TO PIER 16

NOTE: LOCATION OF UTILITIES ARE APPROXIMATE. CONTRACTOR SHALL BE RESPONSIBLE FOR FIELD VERIFICATION.

NOTES:

1. SUPERELEVATION SHOWN FOR MIDDLETOWN APPROACH. SUPERELEVATION FOR PORTLAND APPROACH OPPOSITE HAND.
2. FLOORBEAM POST-TENSIONING ELEMENTS NOT SHOWN.
3. LIMITS OF PENETRATING SEALER PROTECTIVE COMPOUND TO BE APPLIED TO ALL APPROACH SPAN SIDEWALKS, AND PARAPETS.
4. THE MEMBRANE WATERPROOFING (COLD LIQUID ELASTOMERIC) SHALL EXTEND 2 INCHES UP THE VERTICAL FACE OF THE GUTTER.
5. CONTRACTOR TO ENSURE THAT ALL STRINGERS AND FLOORBEAMS ARE ADEQUATELY BRACED DURING DECK REPLACEMENT.

ADDENDUM NO. 1

REV.	DATE	REVISION DESCRIPTION	SHEET NO.
1	07/26/19	REVISED SHEET	01.04.008.A1

THE INFORMATION, INCLUDING ESTIMATED QUANTITIES OF WORK, SHOWN ON THESE SHEETS IS BASED ON LIMITED INVESTIGATIONS BY THE STATE AND IS IN NO WAY WARRANTED TO INDICATE THE CONDITIONS OF ACTUAL QUANTITIES OF WORK WHICH WILL BE REQUIRED.

Plotted Date: 7/31/2019

DESIGNER/DRAFTER: JV

CHECKED BY: RJE

SCALE AS NOTED

STATE OF CONNECTICUT
DEPARTMENT OF TRANSPORTATION

Filename: ...\S-08 (REHABILITATED TYPICAL SECTIONS).dgn

SIGNATURE/BLOCK:

STV 100 Years
STV INCORPORATED
185 PLAINS ROAD, SUITE 208E
MILFORD, CT 06461
(203) 375-0521

PROJECT TITLE:
REHABILITATION OF THE APPROACH SPANS FOR ARRIGONI BRIDGE NO. 00524

TOWN:
MIDDLETOWN
PORTLAND

DRAWING TITLE:
REHABILITATED TYPICAL SECTIONS

PROJECT NO. 0082-0312

DRAWING NO. S-08

SHEET NO. 01.04.008.A1

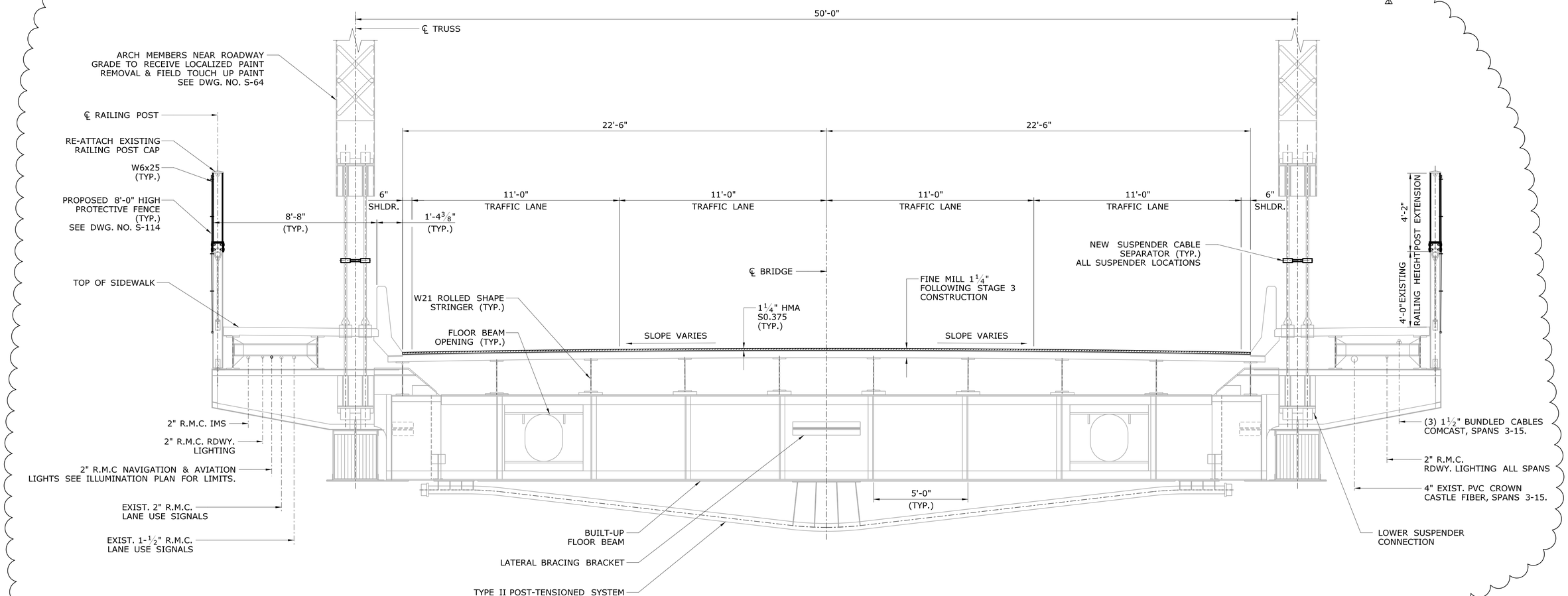

REHABILITATED ARCH SPAN TYPICAL SECTION

SCALE: 3/8" = 1'-0"

NOTE: LOCATION OF UTILITIES ARE APPROXIMATE. CONTRACTOR SHALL BE RESPONSIBLE FOR FIELD VERIFICATION.

ADDENDUM NO. 1

REV.	DATE	REVISION DESCRIPTION	SHEET NO.
1	07/26/19	REVISED SHEET	01.04.009.A1

THE INFORMATION, INCLUDING ESTIMATED QUANTITIES OF WORK, SHOWN ON THESE SHEETS IS BASED ON LIMITED INVESTIGATIONS BY THE STATE AND IS IN NO WAY WARRANTED TO INDICATE THE CONDITIONS OF ACTUAL QUANTITIES OF WORK WHICH WILL BE REQUIRED.

Plotted Date: 7/31/2019

DESIGNER/DRAFTER: REM
CHECKED BY: RJE
SCALE AS NOTED

STATE OF CONNECTICUT
DEPARTMENT OF TRANSPORTATION

Filename: ..\S-09 (REHABILITATED ARCH TYPICAL SECTION).dgn

SIGNATURE/BLOCK:

STV 100 Years
STV INCORPORATED
185 PLAINS ROAD, SUITE 208E
MILFORD, CT 06461
(203) 375-0521

PROJECT TITLE:
REHABILITATION OF THE APPROACH SPANS FOR ARRIGONI BRIDGE NO. 00524

TOWN: **MIDDLETOWN PORTLAND**

DRAWING TITLE: **REHABILITATED ARCH TYPICAL SECTION**

PROJECT NO. **0082-0312**
DRAWING NO. **S-09**
SHEET NO. **01.04.009.A1**

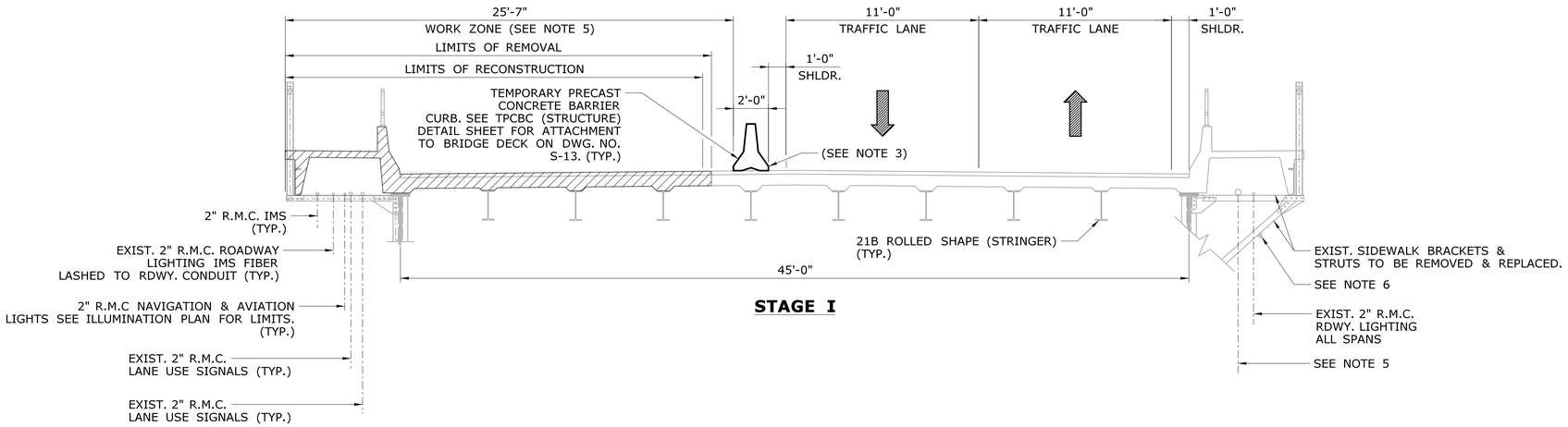

STAGE I

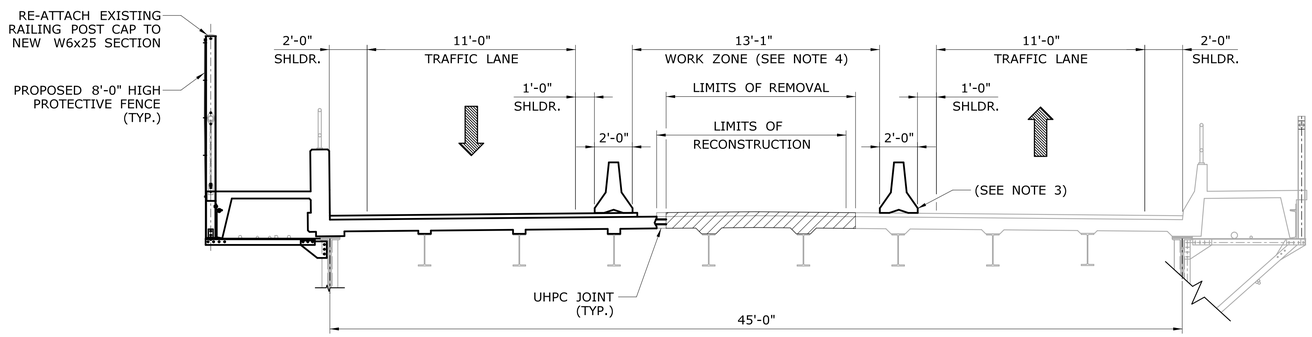

STAGE II

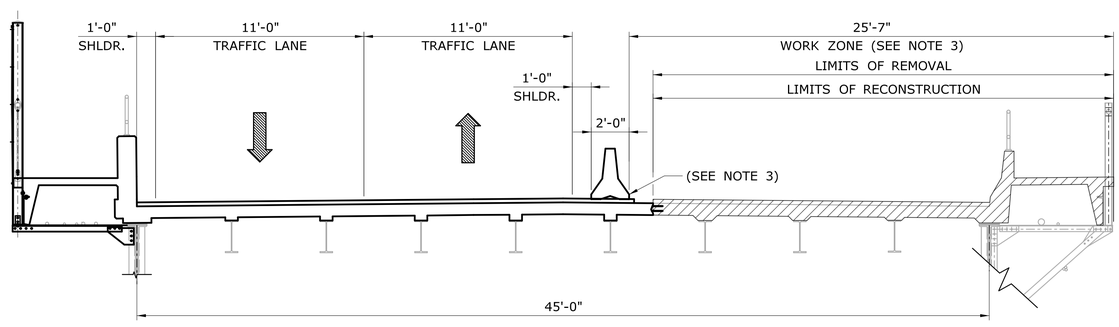

STAGE III

LEGEND

REMOVAL LIMITS

NOTE: LOCATION OF UTILITIES ARE APPROXIMATE. CONTRACTOR SHALL BE RESPONSIBLE FOR VERIFICATION.

TYPICAL BRIDGE SECTION - APPROACH SPANS

SCALE: 1/4" = 1'-0"

SUGGESTED SEQUENCE OF OPERATIONS FOR REPLACEMENT OF DECK IN APPROACH SPANS

I. ESTABLISH STAGE I TRAFFIC CONTROL PLAN FOR WORK ON THE NORTH SIDE OF APPROACH ROADWAYS AND BR. NO. 00524. SEE SUBSET 05 FOR M&PT DETAILS.

II. PROTECTIVE MEASURES OVER BRIDGE SPANS 4,5,& 6, SHALL CONFORM TO GENESEE & WYOMING, (G&W), RAILROAD SPECIFICATIONS INCLUDED ELSEWHERE IN THE CONTRACT DOCUMENTS. CONTRACTOR TO SUBMIT "UNDER BRIDGE PROTECTIVE MEASURES", SHOP DRAWINGS TO PROVIDENCE AND WORCESTER RAILROAD FOR THEIR REVIEW AND APPROVAL PRIOR TO INSTALLATION. SEE DWG. NO. S-12

III. REPLACEMENT OF THE DECK SHALL PROCEED CONTINUOUSLY AND CONCURRENTLY ON THE NORTH SIDE OF THE BRIDGE UNTIL THE ENTIRE WORK WITHIN THE STAGE I WORK ZONE HAS BEEN COMPLETED.

IV. DECK REPLACEMENT SHALL BE COORDINATED WITH THE REPLACEMENT OF THE BARRIER CURB, SIDEWALK AND RAILING SO THAT THE REMOVAL OF THE EXISTING BARRIER CURB, SIDEWALK, AND RAILING PROCEEDS AHEAD OF THE DECK REPLACEMENT, FOLLOWED BY THE INSTALLATION OF THE NEW SIDEWALK, ROADWAY BARRIER AND RAILING.

V. ESTABLISH STAGE II TRAFFIC CONTROL PLAN FOR WORK ON THE MIDDLE THIRD OF BR. 00524 ONLY AFTER ALL WORK WITHIN THE STAGE 1 WORK ZONE HAS BEEN COMPLETED.

VI. ESTABLISH STAGE III TRAFFIC CONTROL PLAN FOR WORK ON THE SOUTH SIDE OF BR. NO. 00524 ONLY AFTER ALL WORK ON THE MIDDLE THIRD OF BR. NO. 00524 DECK HAS BEEN COMPLETED.

NOTES:

1. EACH CONSTRUCTION STAGE SHOWN IS TYPICAL FOR THE ENTIRE LENGTH OF APPROACH SPANS.
2. DIMENSIONS SHOWN ARE BASED ON DETAILS PROVIDED ON ORIGINAL PLANS AND SUBSEQUENT REHABILITATION PLANS. FIELD CONDITIONS MAY VARY.
3. USE EXTREME CARE TO PLACE CENTERLINE OF TEMP. PRECAST CONC. BARRIER CURB COINCIDENT WITH CENTERLINE OF ROADWAY STRINGER.
4. CROWN CASTLE FIBER IN A 4" CONDUIT SHALL BE TEMPORARILY SUPPORTED BY THE CONTRACTOR TO FACILITATE INSTALLATION OF NEW SIDEWALK BRACKETS & STRUTS.
5. THREE 1½" COMCAST INTERDUCTS TO BE TEMPORARILY RELOCATED BY THE UTILITY PRIOR TO STAGE 1 M & PT CONFIGURATION. FACILITIES WILL BE RE-INSTALLED IN THEIR ORIGINAL LOCATION ONCE ALL THREE STAGES ARE COMPLETE.

SEQUENCE OF OPERATIONS:

IN ORDER TO PROVIDE FOR TRAFFIC OPERATIONS AS SPECIFIED IN THE SPECIAL PROVISIONS "MAINTENANCE AND PROTECTION OF TRAFFIC" THE CONTRACTOR SHALL FOLLOW THE SEQUENCE OF OPERATIONS AS OUTLINED HEREIN ON SUBSET 05 PLANS AND AS FURTHER DETAILED IN THE SPECIAL PROVISION "PROSECUTION AND PROGRESS".

ADDENDUM NO. 1

REV.	DATE	REVISION DESCRIPTION	SHEET NO.
1	07/26/19	REVISED SHEET	01.04.010.A1

THE INFORMATION, INCLUDING ESTIMATED QUANTITIES OF WORK, SHOWN ON THESE SHEETS IS BASED ON LIMITED INVESTIGATIONS BY THE STATE AND IS IN NO WAY WARRANTED TO INDICATE THE CONDITIONS OF ACTUAL QUANTITIES OF WORK WHICH WILL BE REQUIRED.

Plotted Date: 7/31/2019

DESIGNER/DRAFTER: JV
CHECKED BY: RJE
SCALE AS NOTED

STATE OF CONNECTICUT
DEPARTMENT OF TRANSPORTATION

Filename: ...\S-10 (CONSTRUCTION STAGES).dgn

SIGNATURE/BLOCK:

STATE OF CONNECTICUT #12175 LICENSED PROFESSIONAL ENGINEER

STV 100 Years
STV INCORPORATED
185 PLAINS ROAD, SUITE 208E
MILFORD, CT 06461
(203) 375-0521

PROJECT TITLE:
REHABILITATION OF THE APPROACH SPANS FOR ARRIGONI BRIDGE NO. 00524

TOWN: **MIDDLETOWN PORTLAND**

DRAWING TITLE: **CONSTRUCTION STAGES**

PROJECT NO. 0082-0312
DRAWING NO. S-10
SHEET NO. 01.04.010.A1

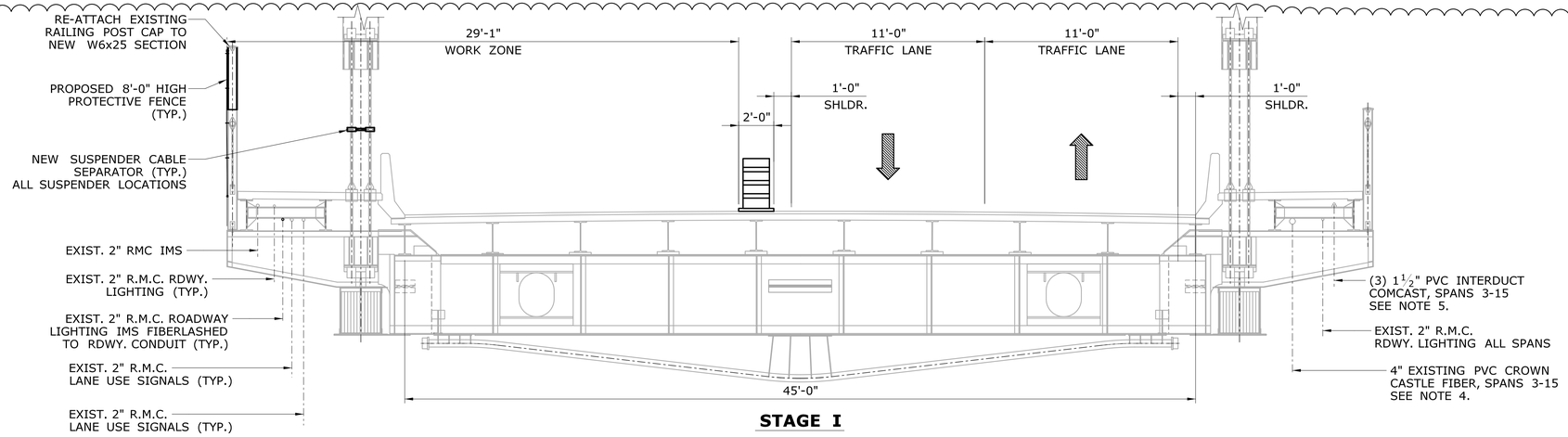

STAGE I

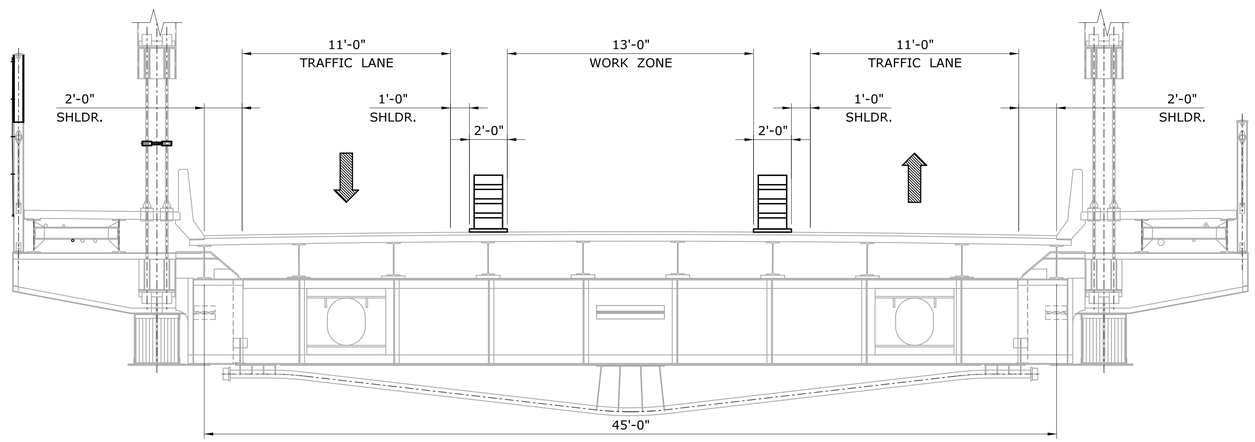

STAGE II

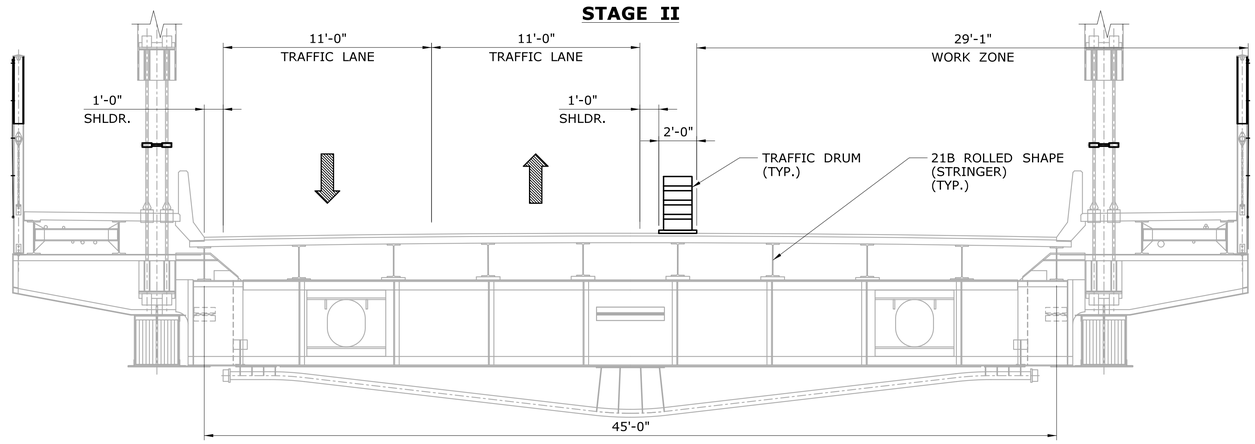

STAGE III

TYPICAL ARCH BRIDGE SECTION

SCALE: 1/4" = 1'-0"

NOTE: LOCATION OF UTILITIES ARE APPROXIMATE. CONTRACTOR SHALL BE RESPONSIBLE FOR VERIFICATION.

SUGGESTED TRAFFIC STAGES ON THE ARCH SPANS TO CORRESPOND TO CONSTRUCTION STAGES OF THE APPROACH SPANS

1. WORK THIS SHEET WITH DWG NO. S-10
2. EXTEND PEDESTRIAN RAIL POSTS AND CONSTRUCT THE STEEL MESH FENCING AS REQUIRED.
3. INSTALL THE NEW SUSPENDER CABLE SEPARATORS AS REQUIRED.

SEQUENCE OF OPERATIONS:

IN ORDER TO PROVIDE FOR TRAFFIC OPERATIONS AS SPECIFIED IN THE SPECIAL PROVISIONS "MAINTENANCE AND PROTECTION OF TRAFFIC" THE CONTRACTOR SHALL FOLLOW THE SEQUENCE OF OPERATIONS AS OUTLINED HEREIN ON SUBSET 05 PLANS AND AS FURTHER DETAILED IN THE SPECIAL PROVISION "PROSECUTION AND PROGRESS".

ADDENDUM NO. 1

REV.	DATE	REVISION DESCRIPTION	SHEET NO.
1	07/26/19	REVISED SHEET	01.04.011.A1

THE INFORMATION, INCLUDING ESTIMATED QUANTITIES OF WORK, SHOWN ON THESE SHEETS IS BASED ON LIMITED INVESTIGATIONS BY THE STATE AND IS IN NO WAY WARRANTED TO INDICATE THE CONDITIONS OF ACTUAL QUANTITIES OF WORK WHICH WILL BE REQUIRED.

Plotted Date: 7/31/2019

DESIGNER/DRAFTER: REM
CHECKED BY: RJE
SCALE AS NOTED

STATE OF CONNECTICUT
DEPARTMENT OF TRANSPORTATION

Filename: ...\S-11 (TYPICAL ARCH SECTIONS STAGE CONSTRUCTION).dgn

SIGNATURE/BLOCK:

STV 100 Years
STV INCORPORATED
185 PLAINS ROAD, SUITE 208E
MILFORD, CT 06461
(203) 375-0521

PROJECT TITLE:
REHABILITATION OF THE APPROACH SPANS FOR ARRIGONI BRIDGE NO. 00524

TOWN: **MIDDLETOWN PORTLAND**

DRAWING TITLE: **TYPICAL ARCH SECTIONS STAGE CONSTRUCTION**

PROJECT NO. 0082-0312
DRAWING NO. S-11
SHEET NO. 01.04.011.A1

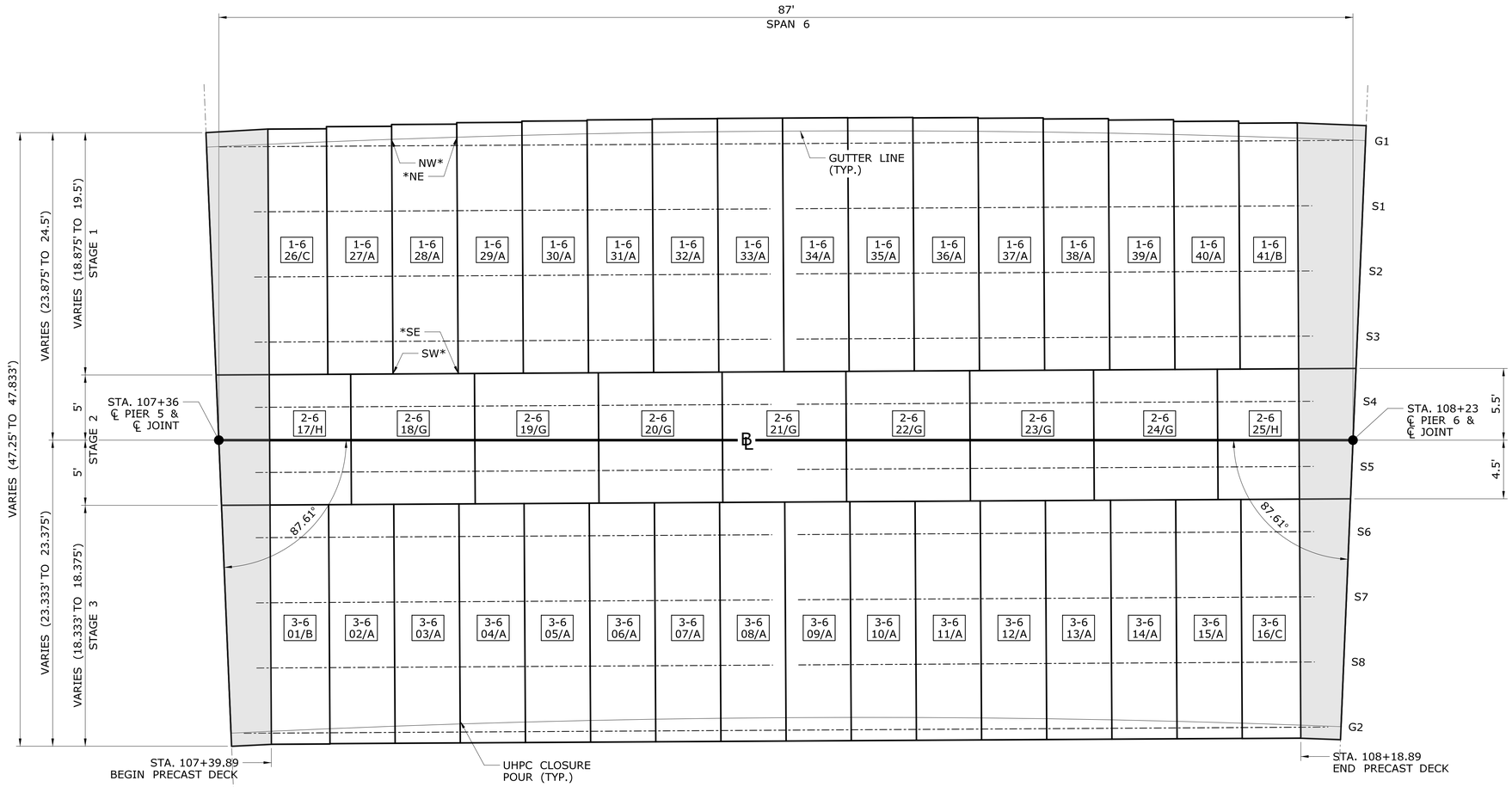

*PANEL SET POINT ELEVATION

SPAN 6

SCALE: 1" = 5'

PANEL NUMBER	PANEL SET POINT ELEVATIONS			
	NW	NE	SW	SE
01/B	90.50	90.70	90.34	90.54
02/A	90.70	90.92	90.54	90.76
03/A	90.92	91.13	90.76	90.98
04/A	91.13	91.35	90.98	91.19
05/A	91.35	91.56	91.19	91.40
06/A	91.56	91.77	91.40	91.61
07/A	91.77	91.97	91.61	91.82
08/A	91.97	92.18	91.82	92.02
09/A	92.18	92.38	92.02	92.23
10/A	92.38	92.58	92.23	92.42
11/A	92.58	92.78	92.42	92.62
12/A	92.78	92.97	92.62	92.82
13/A	92.97	93.16	92.82	93.01
14/A	93.16	93.35	93.01	93.20
15/A	93.35	93.54	93.20	93.38
16/A	93.54	93.71	93.38	93.55

STAGE 3

PANEL NUMBER	PANEL SET POINT ELEVATIONS			
	NW	NE	SW	SE
17/H	90.59	90.87	90.50	90.78
18/G	90.87	91.28	90.78	91.19
19/G	91.28	91.68	91.19	91.59
20/G	91.68	92.07	91.59	91.98
21/G	92.07	92.46	91.98	92.37
22/G	92.46	92.84	92.37	92.75
23/G	92.84	93.21	92.75	93.12
24/G	93.21	93.57	93.12	93.48
25/H	93.57	93.80	93.48	93.71

STAGE 2

PANEL NUMBER	PANEL SET POINT ELEVATIONS			
	NW	NE	SW	SE
26/C	90.76	90.96	90.59	90.79
27/A	90.96	91.18	90.79	91.01
28/A	91.18	91.39	91.01	91.22
29/A	91.39	91.61	91.22	91.44
30/A	91.61	91.82	91.44	91.65
31/A	91.82	92.03	91.65	91.86
32/A	92.03	92.24	91.86	92.06
33/A	92.24	92.44	92.06	92.27
34/A	92.44	92.64	92.27	92.47
35/A	92.64	92.84	92.47	92.67
36/A	92.84	93.04	92.67	92.87
37/A	93.04	93.23	92.87	93.06
38/A	93.23	93.42	93.06	93.26
39/A	93.42	93.61	93.26	93.45
40/A	93.61	93.80	93.45	93.64
41/B	93.80	93.97	93.64	93.80

STAGE 1

LEGEND:

W-X / YY/Z — STAGE-SPAN / PANEL NUMBER/PANEL TYPE

CAST-IN-PLACE: BRIDGE DECK CONCRETE

NOTES:

1. FOR PRECAST DECK PANEL NOTES SEE S-71.

ADDENDUM NO. 1

REV.	DATE	REVISION DESCRIPTION	SHEET NO.
1	07/26/19	REVISED SHEET	01.04.077.A1

THE INFORMATION, INCLUDING ESTIMATED QUANTITIES OF WORK, SHOWN ON THESE SHEETS IS BASED ON LIMITED INVESTIGATIONS BY THE STATE AND IS IN NO WAY WARRANTED TO INDICATE THE CONDITIONS OF ACTUAL QUANTITIES OF WORK WHICH WILL BE REQUIRED.

Plotted Date: 7/31/2019

DESIGNER/DRAFTER: JV
CHECKED BY: RJE
SCALE AS NOTED

STATE OF CONNECTICUT
DEPARTMENT OF TRANSPORTATION

Filename: ...\S-77 (PRECAST DECK PLAN SPAN - 6).dgn

SIGNATURE/BLOCK:

STV 100 Years
STV INCORPORATED
185 PLAINS ROAD, SUITE 208E
MILFORD, CT 06461
(203) 375-0521

PROJECT TITLE:
REHABILITATION OF THE APPROACH SPANS FOR ARRIGONI BRIDGE NO. 00524

TOWN: **MIDDLETOWN PORTLAND**

DRAWING TITLE: **PRECAST DECK PLAN SPAN 6**

PROJECT NO. 0082-0312
DRAWING NO. S-77
SHEET NO. 01.04.077.A1

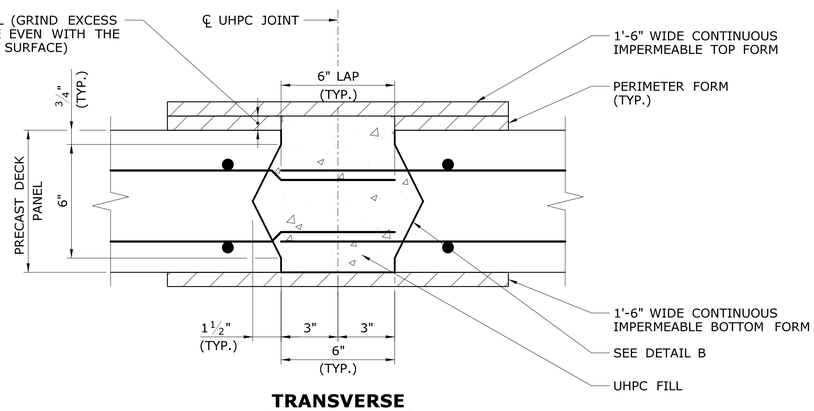

TRANSVERSE

SCALE: 3" = 1'-0"

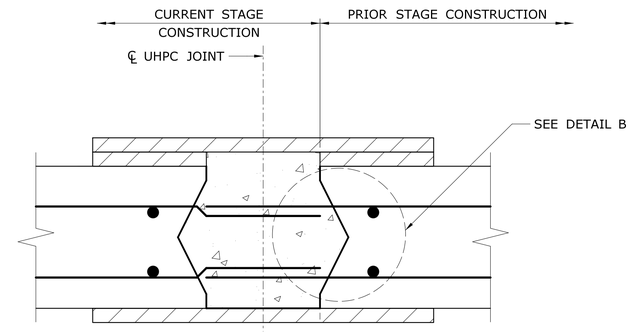

NOTE:

FOR ADDITIONAL INFORMATION SEE TRANSVERSE DETAIL.

LONGITUDINAL

SCALE: 3" = 1'-0"

UHPC JOINT DETAILS

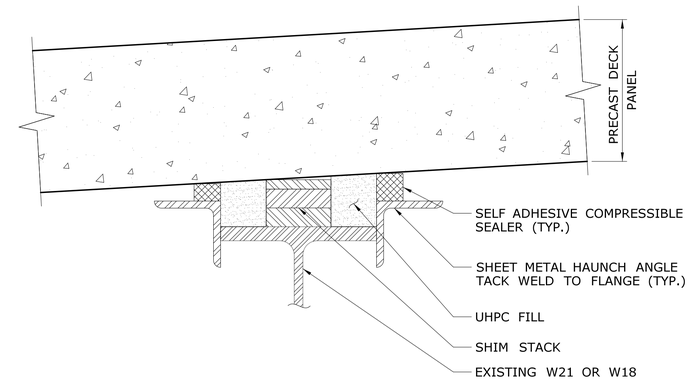

UHPC HAUNCH OVER STRINGER DETAIL (WITH SHIM STACK)

SCALE: 3" = 1'-0"

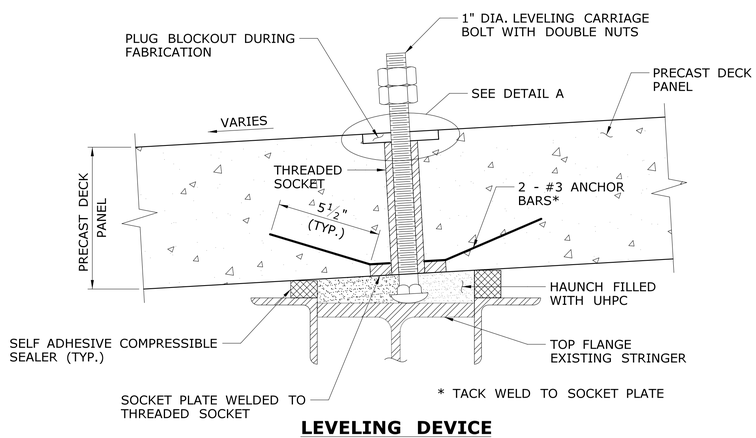

LEVELING DEVICE

SCALE: 3" = 1'-0"

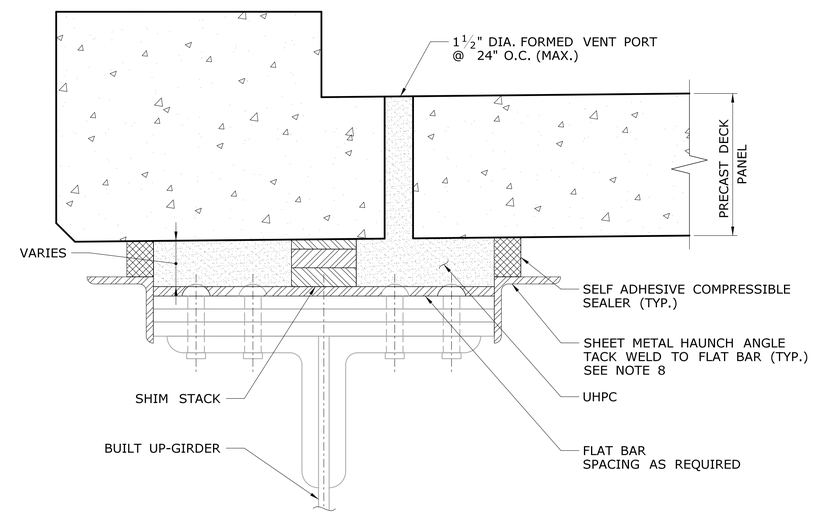

UHPC HAUNCH OVER GIRDER DETAIL (WITH SHIM STACK)

SCALE: 3" = 1'-0"

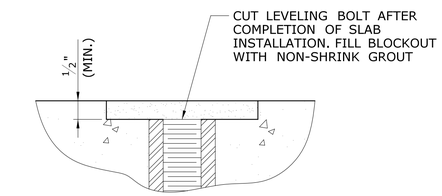

DETAIL A

SCALE: 6" = 1'-0"

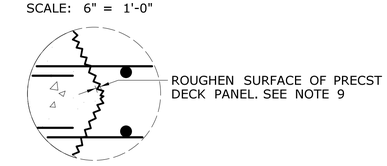

DETAIL B

SCALE: 3" = 1'-0"

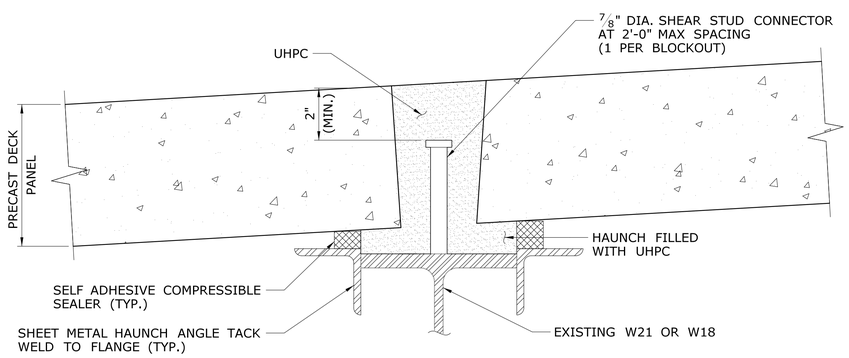

SHEAR CONNECTOR BLOCKOUT WITH HAUNCH

SCALE: 3" = 1'-0"

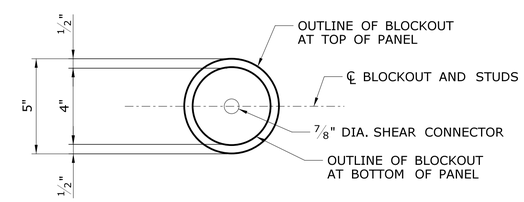

SHEAR CONNECTOR BLOCKOUT DETAIL

SCALE: 1 1/2" = 1'-0"

NOTES:

1. METHOD OF LEVELING DECK PANELS AND FORM WORK DETAILS ARE FOR ILLUSTRATION ONLY. DESIGN, DETAILING FABRICATION AND THE USE OF ALL TEMPORARY WORKS AND DEVICES ARE THE SOLE RESPONSIBILITY OF THE CONTRACTOR AND PRECAST DECK PANEL FABRICATOR.
2. THE COST OF ALL FORM WORK DETAILS AND PRECAST DECK PANEL LEVELING DEVICES ARE INCIDENTAL TO THE COST OF UHPC MATERIAL.
3. PLACE A MINIMUM OF FOUR LEVELING DEVICES PER DECK PANEL.
4. VENT PORTS SHALL BE BLAST CLEANED AND COMPLETELY FILLED WITH UHPC MATERIAL.
5. GIRDER AND STRINGER HAUNCHES SHALL BE COMPLETELY FILLED FULL DEPTH WITH UHPC MATERIAL.
6. ALL UHPC JOINTS SHALL BE COVERED BY A TOP FORM WITH MOISTURE BARRIER.
7. ONCE THE UHPC REACHES A COMPRESSIVE STRENGTH OF 10.0 KST, THE TOP FORMS OF THE JOINT MAY BE REMOVED TO FACILITATE GRINDING OF THE JOINTS TO BE EVEN WITH THE DECK PANEL SURFACE.
8. FIELD WELDING TO THE BUILT-UP GIRDER TOP FLANGE WILL NOT BE PERMITTED.
9. ROUGHEN SURFACE TO ATTAIN ¼" AVERAGE AMPLITUDE OF THE EXPOSED AGGREGATE FINISH FOR ALL PRECAST CONCRETE SURFACES IN CONTACT WITH UHPC.

ADDENDUM NO. 1

REV.	DATE	REVISION DESCRIPTION	SHEET NO.
1	07/26/19	REVISED SHEET	01.04.096.A1

THE INFORMATION, INCLUDING ESTIMATED QUANTITIES OF WORK, SHOWN ON THESE SHEETS IS BASED ON LIMITED INVESTIGATIONS BY THE STATE AND IS IN NO WAY WARRANTED TO INDICATE THE CONDITIONS OF ACTUAL QUANTITIES OF WORK WHICH WILL BE REQUIRED.

Plotted Date: 8/7/2019

DESIGNER/DRAFTER: JV

CHECKED BY: RJE

SCALE AS NOTED

STATE OF CONNECTICUT
DEPARTMENT OF TRANSPORTATION

Filename: ...\S-96 (UHPC DETAILS).dgn

SIGNATURE/BLOCK:

STV 100 Years
STV INCORPORATED
185 PLAINS ROAD, SUITE 208E
MILFORD, CT 06461
(203) 375-0521

PROJECT TITLE:
REHABILITATION OF THE APPROACH SPANS FOR ARRIGONI BRIDGE NO. 00524

TOWN: **MIDDLETOWN PORTLAND**

DRAWING TITLE: **UHPC DETAILS**

PROJECT NO. 0082-0312

DRAWING NO. S-96

SHEET NO. 01.04.096.A1

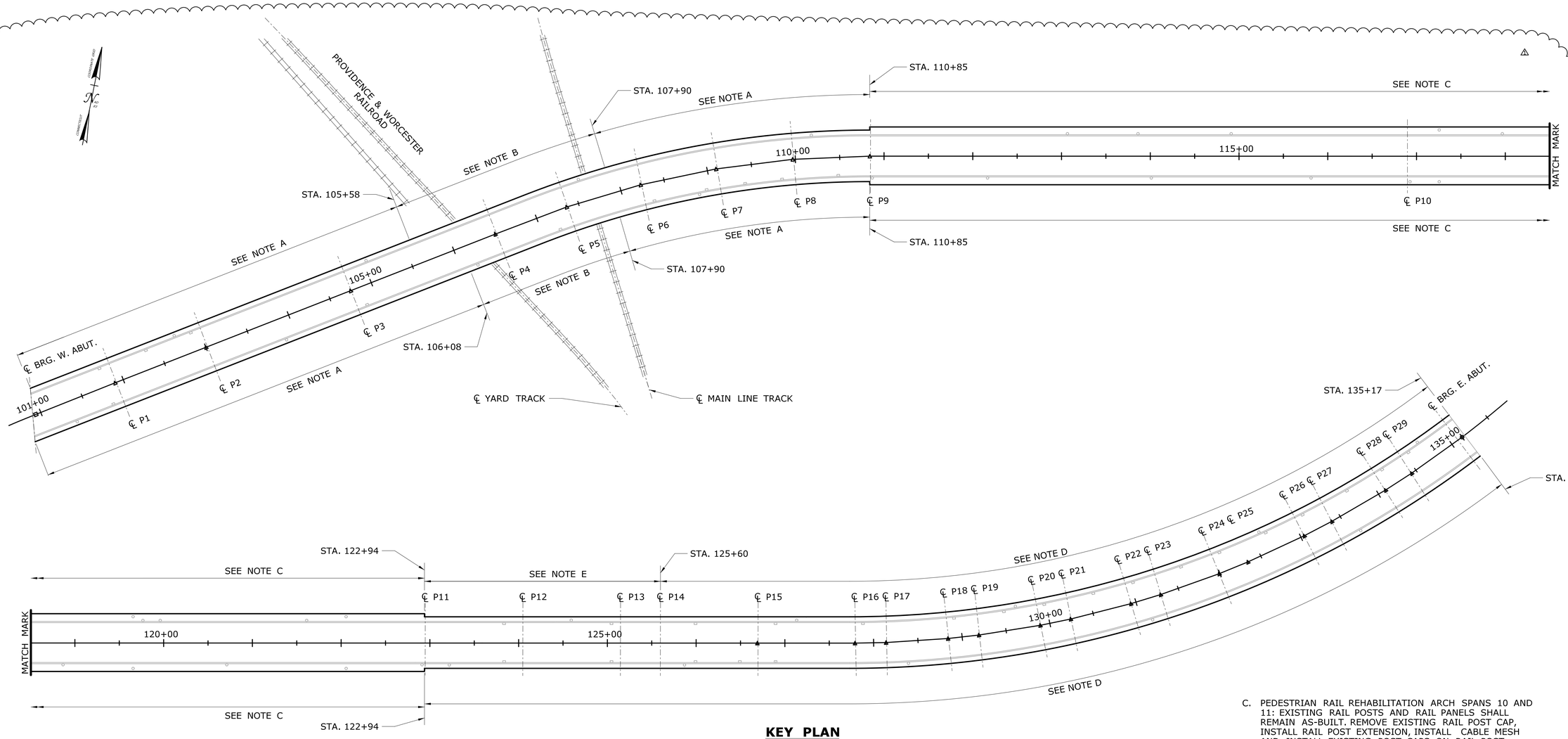

KEY PLAN

SCALE: 1" = 60'

NOTES:

A. PEDESTRIAN RAIL REHABILITATION SPANS 1 THRU 9 (UNLESS NOTED): REMOVE EXISTING RAIL POSTS AND RAIL PANELS IN THEIR ENTIRETY. RAIL POSTS SHALL BE DISPOSED OF BY THE CONTRACTOR. RAIL PANELS AND RAIL POST CAPS SHALL BE SALVAGED AND STORED BY THE CONTRACTOR AND RE-USED. INSTALL NEW RAIL POSTS (8'-0" PROJECTION ABOVE SIDEWALK GRADE) WITH EXISTING POST CAPS, INSTALL EXISTING RAIL PANELS TO NEW RAIL POSTS AND INSTALL CABLE MESH. SEE DWG. NO. S-113 FOR DETAILS.

B. CURVED PEDESTRIAN RAIL FENCE REHABILITATION, & INSTALLATION. BEGIN AND END 25' MIN. FROM ℄ OF EXISTING P & W RAILROAD TRACKS BELOW: REMOVE EXISTING RAIL POSTS AND RAIL PANELS IN THEIR ENTIRETY. RAIL POSTS SHALL BE DISPOSED OF BY THE CONTRACTOR. RAIL PANELS AND RAIL POST CAPS SHALL BE SALVAGED AND STORED BY THE CONTRACTOR AND RE-USED. INSTALL NEW RAIL POSTS (12'-0" PROJECTION ABOVE SIDEWALK GRADE WITH CURVED TUBE POST ATTACHMENT), INSTALL EXISTING RAIL PANELS TO NEW RAIL POSTS AND INSTALL CABLE MESH. SEE DWG. NO. S-117-1 FOR DETAILS.

C. PEDESTRIAN RAIL REHABILITATION ARCH SPANS 10 AND 11: EXISTING RAIL POSTS AND RAIL PANELS SHALL REMAIN AS-BUILT. REMOVE EXISTING RAIL POST CAP, INSTALL RAIL POST EXTENSION, INSTALL CABLE MESH AND INSTALL EXISTING POST CAPS ON RAIL POST EXTENSIONS. SEE DWG NO. S-115 FOR DETAILS.

D. PEDESTRIAN RAIL REHABILITATION SPANS 12 THRU 30 (UNLESS NOTED): REMOVE EXISTING RAIL POSTS AND RAIL PANELS IN THEIR ENTIRETY. RAIL POSTS SHALL BE DISPOSED OF BY THE CONTRACTOR. RAIL PANELS AND RAIL POST CAPS SHALL BE SALVAGED AND STORED BY THE CONTRACTOR AND RE-USED. INSTALL NEW RAIL POSTS (8'-0" PROJECTION ABOVE SIDEWALK GRADE) WITH EXISTING POST CAPS, INSTALL EXISTING RAIL PANELS TO NEW RAIL POSTS AND INSTALL CABLE MESH. SEE DWG. NO. S-113 FOR DETAILS.

E. PEDESTRIAN RAIL REHABILITATION SPANS 12, 13 AND 14 NORTH SIDE ONLY: REMOVE EXISTING RAIL POSTS, RAIL PANELS AND 12'-0" FENCE SECTIONS IN THEIR ENTIRETY. RAIL POSTS AND FENCE SECTIONS SHALL BE DISPOSED OF BY THE CONTRACTOR. RAIL PANELS AND RAIL POST CAPS SHALL BE SALVAGED AND STORED BY THE CONTRACTOR AND RE-USED. INSTALL NEW RAIL POSTS (12'-0" PROJECTION ABOVE SIDEWALK GRADE) WITH EXISTING POST CAPS, INSTALL EXISTING RAIL PANELS TO NEW RAIL POSTS AND INSTALL CABLE MESH. SEE DWG NO. S-116 FOR DETAILS.

ADDENDUM NO. 1

REV.	DATE	REVISION DESCRIPTION	SHEET NO.
1	07/26/19	REVISED SHEET	01.04.110.A1

THE INFORMATION, INCLUDING ESTIMATED QUANTITIES OF WORK, SHOWN ON THESE SHEETS IS BASED ON LIMITED INVESTIGATIONS BY THE STATE AND IS IN NO WAY WARRANTED TO INDICATE THE CONDITIONS OF ACTUAL QUANTITIES OF WORK WHICH WILL BE REQUIRED.

Plotted Date: 7/30/2019

DESIGNER/DRAFTER: REM
CHECKED BY: RJE
SCALE AS NOTED

STATE OF CONNECTICUT
DEPARTMENT OF TRANSPORTATION

Filename: ...\S-110 (PEDESTRIAN RAIL KEY PLAN).dgn

SIGNATURE/BLOCK:

STV 100 Years
STV INCORPORATED
185 PLAINS ROAD, SUITE 208E
MILFORD, CT 06461
(203) 375-0521

PROJECT TITLE:
REHABILITATION OF THE APPROACH SPANS FOR ARRIGONI BRIDGE NO. 00524

TOWN: **MIDDLETOWN PORTLAND**

DRAWING TITLE: **PEDESTRIAN RAIL KEY PLAN**

PROJECT NO. 0082-0312
DRAWING NO. S-110
SHEET NO. 01.04.110.A1

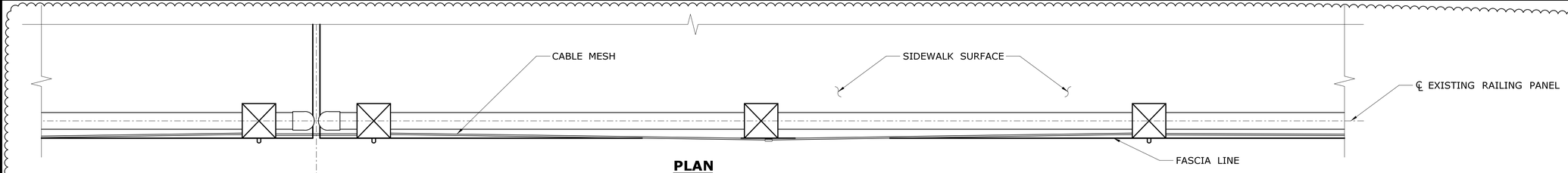

PLAN
SCALE: 1" = 1'-0"

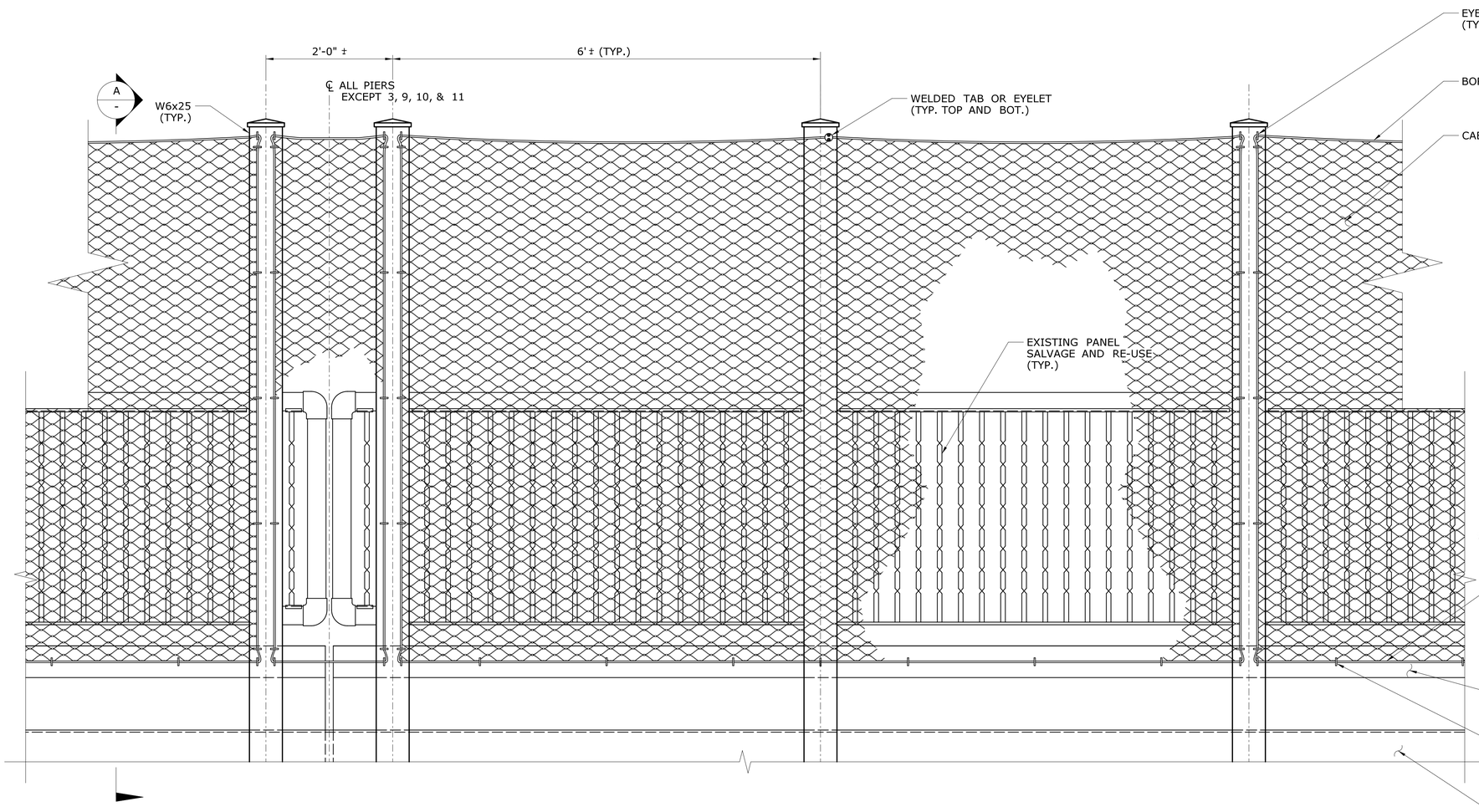

FASCIA SIDE ELEVATION VIEW
CABLE MESH ATTACHMENT TO PEDESTRIAN RAIL
SCALE: 1" = 1'-0"

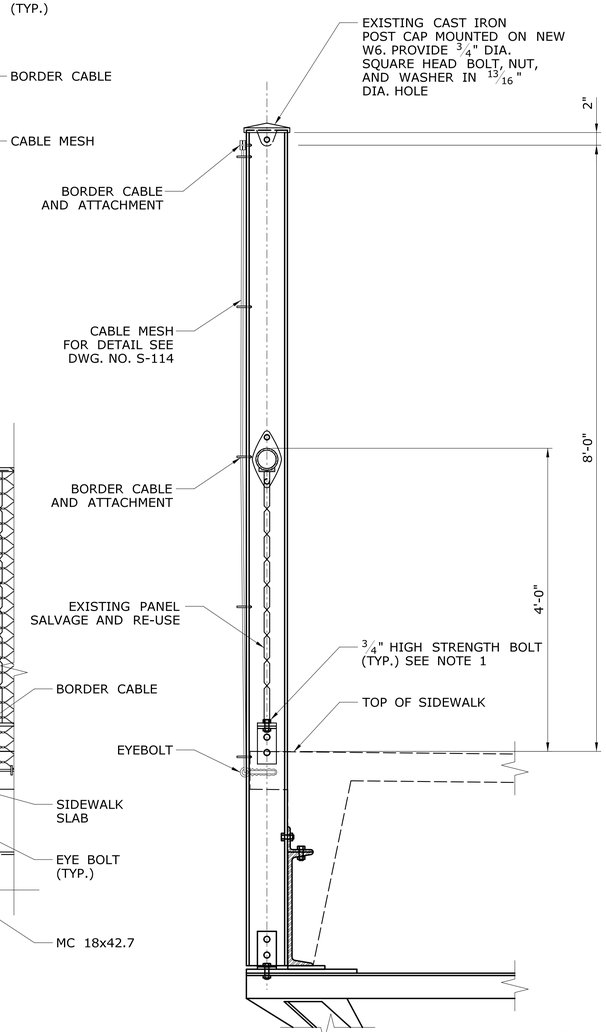

SECTION RAILING
SCALE: 1" = 1'-0"

A
-

NOTES:

1. ALL BOLTS FOR RAILINGS & POSTS SHALL BE NEW 3/4" ASTM F3125, GRADE A325 HIGH STRENGH BOLTS IN 13/16" HOLES, AND SHALL BE MECHANICALLY GALVANIZED.

ADDENDUM NO. 1

REV.	DATE	REVISION DESCRIPTION	SHEET NO.
1	07/26/19	REVISED SHEET	01.04.113.A1

THE INFORMATION, INCLUDING ESTIMATED QUANTITIES OF WORK, SHOWN ON THESE SHEETS IS BASED ON LIMITED INVESTIGATIONS BY THE STATE AND IS IN NO WAY WARRANTED TO INDICATE THE CONDITIONS OF ACTUAL QUANTITIES OF WORK WHICH WILL BE REQUIRED.

Plotted Date: 7/24/2019

DESIGNER/DRAFTER: REM
CHECKED BY: RJE
SCALE AS NOTED

STATE OF CONNECTICUT
DEPARTMENT OF TRANSPORTATION

Filename: ..\S-113 (PEDESTRIAN RAIL DETAILS).dgn

SIGNATURE/BLOCK:

STV 100 Years
STV INCORPORATED
185 PLAINS ROAD, SUITE 208E
MILFORD, CT 06461
(203) 375-0521

PROJECT TITLE:
REHABILITATION OF THE APPROACH SPANS FOR ARRIGONI BRIDGE NO. 00524

TOWN: **MIDDLETOWN PORTLAND**

DRAWING TITLE: **PEDESTRIAN RAIL DETAILS**

PROJECT NO. **0082-0312**
DRAWING NO. **S-113**
SHEET NO. **01.04.113.A1**

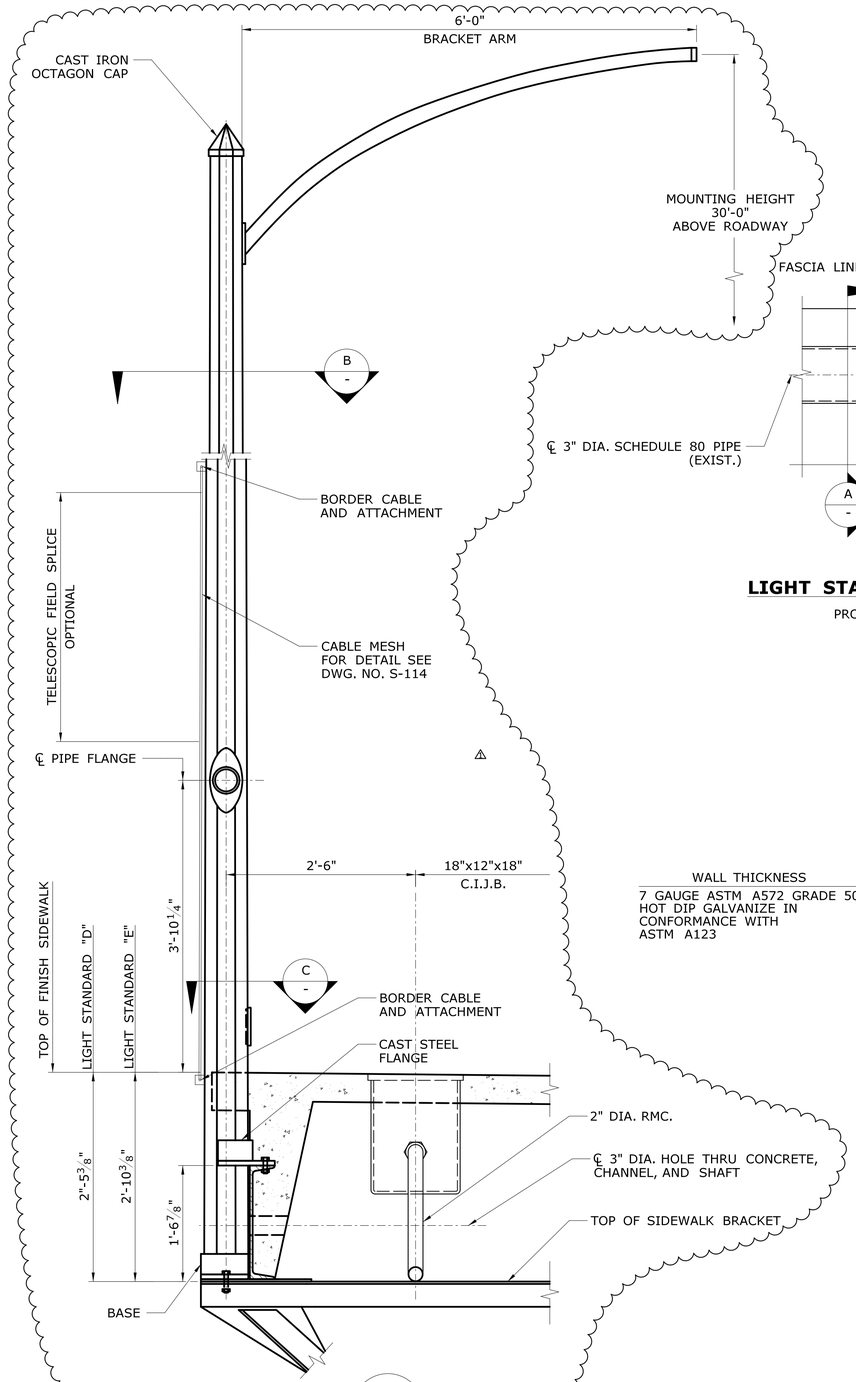

SECTION A - SCALE: 1" = 1'-0"

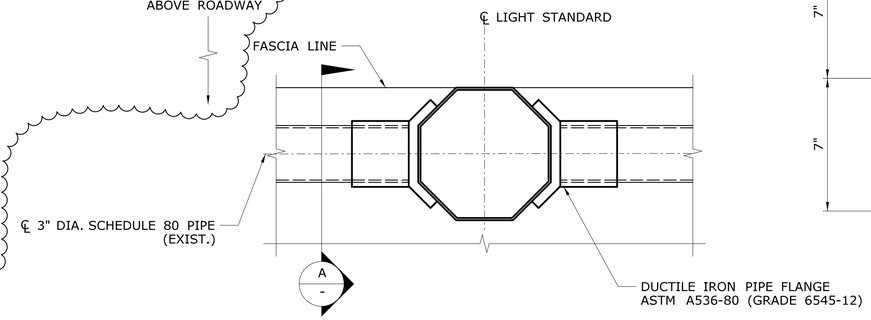

PLAN

LIGHT STANDARD SUPPORT APPROACH SPANS

PROTECTIVE FENCING NOT SHOWN FOR CLARITY
SCALE: 3" = 1'-0"

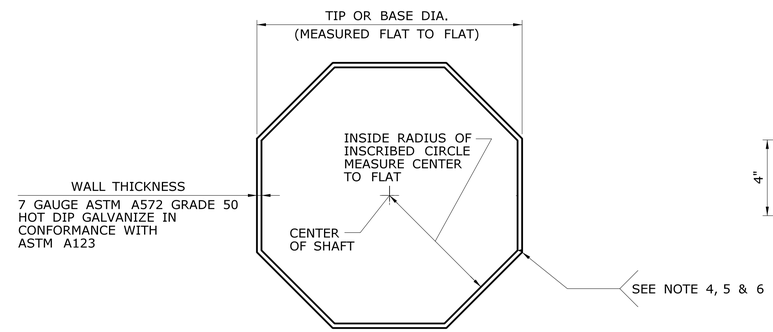

SECTION B - SCALE: 6" = 1'-0"

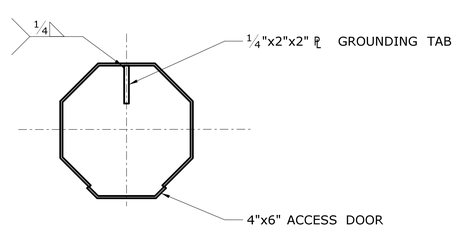

ACCESS DOOR PLAN C - SCALE: 6" = 1'-0"

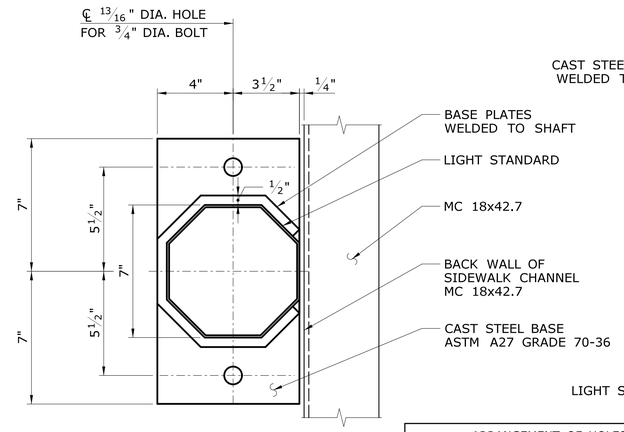

BASE PLAN
SCALE: 3" = 1'-0"

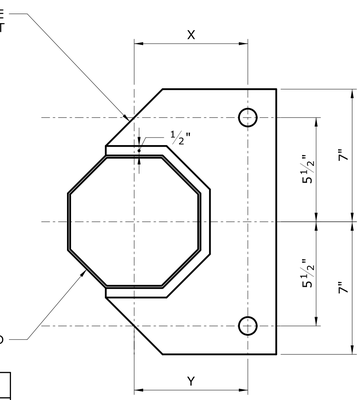

FLANGE PLAN
SCALE: 3" = 1'-0"

ARRANGEMENT OF HOLES		
LIGHT STANDARD	X	Y
D1, 2, 4, 5, 6	6"	6"
D3, 8	6"	5 7/8"
D7	5 7/8"	6"
E1, 2	6"	6 3/16"
E3	6 1/8"	6"
E4	6"	6"

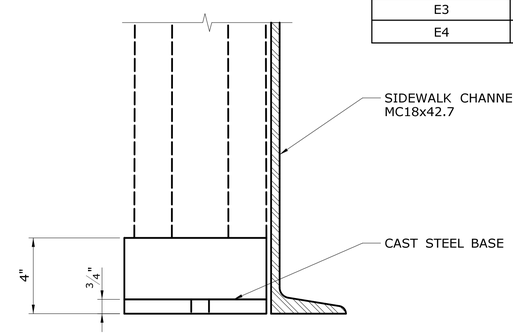

BASE ELEVATION
SCALE: 3" = 1'-0"

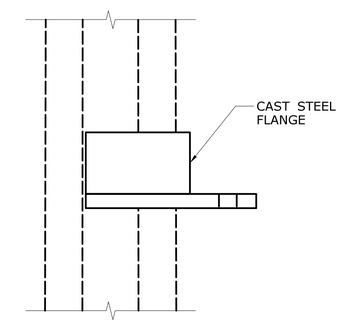

FLANGE ELEVATION
SCALE: 3" = 1'-0"

LIGHT STANDARD DETAILS

NOTES:

1. BRIDGE MOUNTED LIGHT STANDARDS SHALL BE PAID FOR UNDER THE ITEM, "DECORATIVE LIGHT STANDARD"
2. SEE SUBSET 06 FOR ILLUMINATION DETAILS.
3. LIGHT STANDARDS SHALL BE 8-SIDED WITH THE DIAMETER CHANGING AT A RATE OF 0.14 INCH PER FOOT.
4. LONGITUDINAL SEAM WELDS SHALL BE PARTIAL PENETRATION 0.6x WALL EXCEPT AS NOTED BELOW.
5. LONGITUDINAL SEAM WELDS WITHIN 6 IN. OF CIRCUMFERENTIAL WELDS SHALL BE COMPLETE PENETRATION.
6. LONGITUDINAL SEAM WELDS AT TELESCOPIC FIELD SPLICES SHALL BE COMPLETE PENETRATION SPLICE LENGTH PLUS 6 IN.
7. FOR LOCATION OF LIGHT STANDARDS SEE DWG. NO. S-66. AND S-67.

ADDENDUM NO. 1

REV.	DATE	REVISION DESCRIPTION	SHEET NO.
1	07/26/19	REVISED SHEET	01.04.114.A1

THE INFORMATION, INCLUDING ESTIMATED QUANTITIES OF WORK, SHOWN ON THESE SHEETS IS BASED ON LIMITED INVESTIGATIONS BY THE STATE AND IS IN NO WAY WARRANTED TO INDICATE THE CONDITIONS OF ACTUAL QUANTITIES OF WORK WHICH WILL BE REQUIRED.

Plotted Date: 7/24/2019

DESIGNER/DRAFTER: REM
CHECKED BY: RJE
SCALE AS NOTED

STATE OF CONNECTICUT
DEPARTMENT OF TRANSPORTATION

Filename: ...\S-114 (LIGHT STANDARD SUPPORT).dgn

SIGNATURE/BLOCK:

STV 100 Years
STV INCORPORATED
185 PLAINS ROAD, SUITE 208E
MILFORD, CT 06461
(203) 375-0521

PROJECT TITLE:
REHABILITATION OF THE APPROACH SPANS FOR ARRIGONI BRIDGE NO. 00524

TOWN: **MIDDLETOWN PORTLAND**

DRAWING TITLE: **LIGHT STANDARD SUPPORT**

PROJECT NO. 0082-0312
DRAWING NO. S-114
SHEET NO. 01.04.114.A1

CABLE MESH NOTES:

1. THE CABLE MESH DETAIL IS INTENDED TO CONVEY THE APPROXIMATE CABLE MESH DIMENSIONS. THE MANUFACTURER OF THE CABLE MESH SHALL PROVIDE A STANDARD CATALOGUE PRODUCT. THE MAXIMUM OPENING IN THE CABLE MESH SHALL RESTRICT THE PASSAGE OF A 4 INCH DIAMETER SPHERE.
2. ALL CABLE MESH COMPONENTS SHALL BE TYPE 316 STAINLESS STEEL.

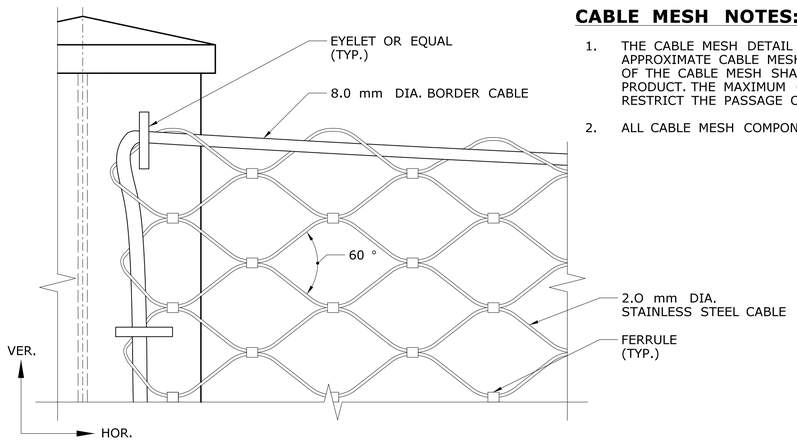

CABLE MESH DETAIL
SCALE: 6" = 1'-0"

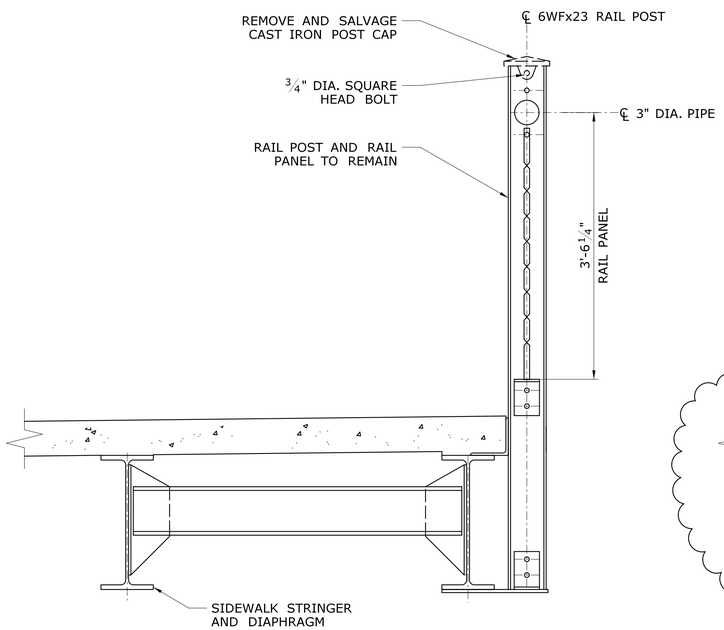

EXISTING
SCALE: 1" = 1'-0"

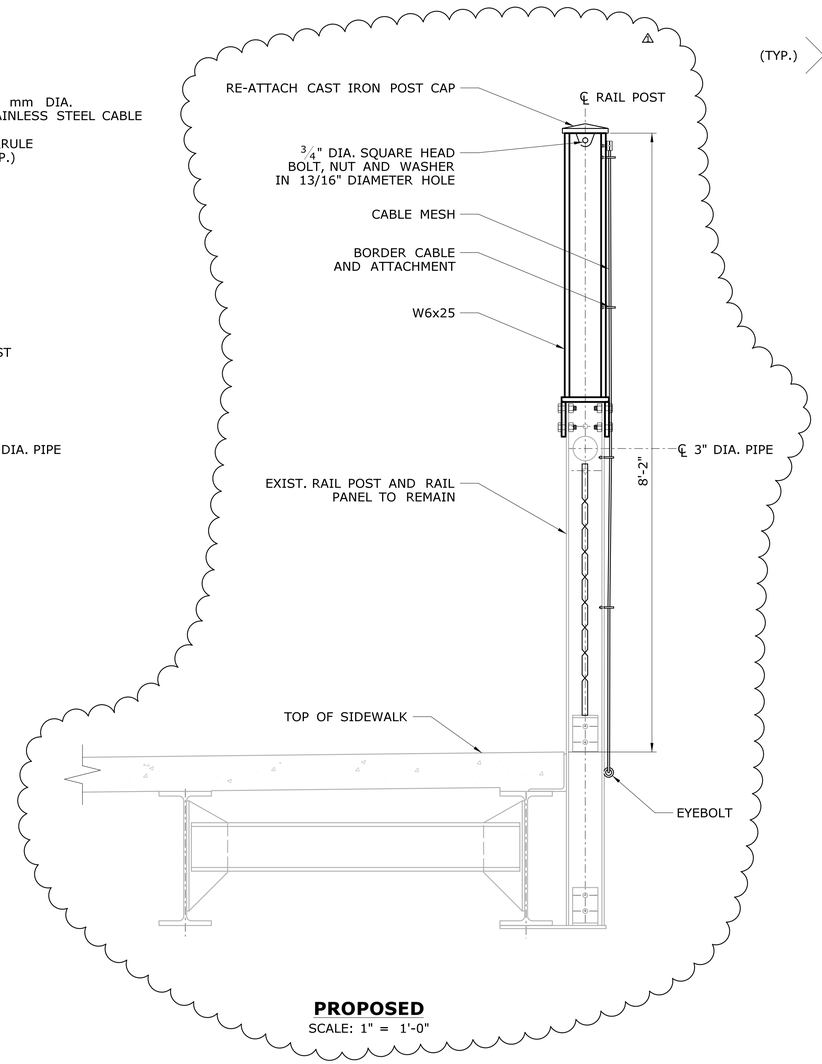

PROPOSED
SCALE: 1" = 1'-0"

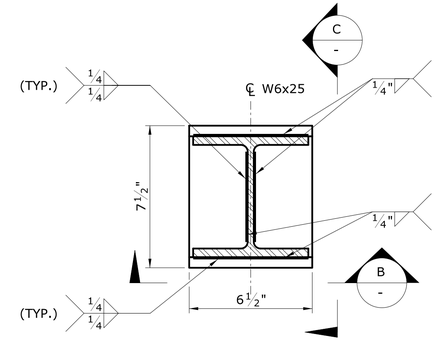

SECTION A
SCALE: 3" = 1'-0"

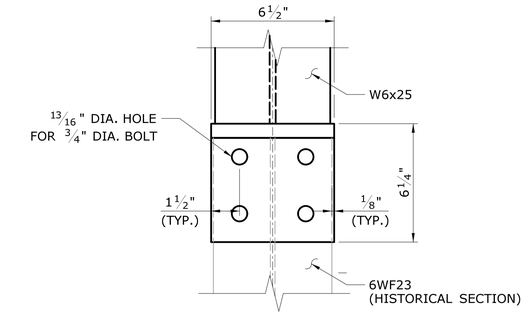

SECTION B
SCALE: 3" = 1'-0"

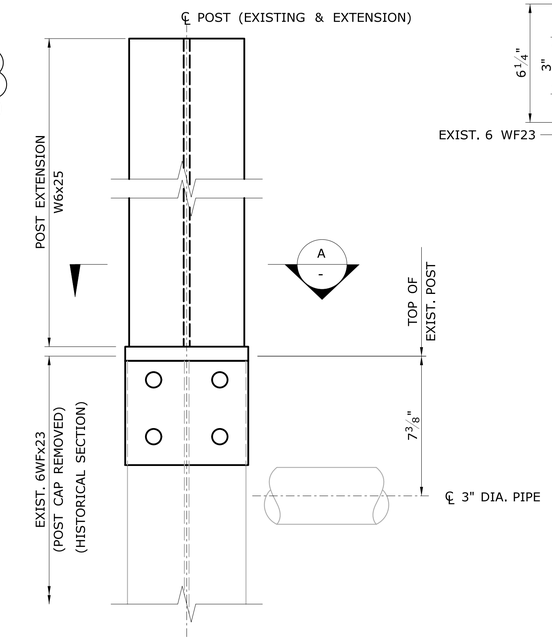

SPAN 10 & 11
RAIL POST EXTENSION
SCALE: 3" = 1'-0"

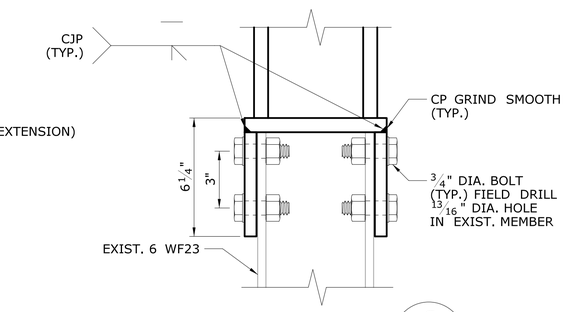

SECTION C
SCALE: 3" = 1'-0"

TYPICAL SIDEWALK SECTION SPANS 10 & 11

ADDENDUM NO. 1

REV.	DATE	REVISION DESCRIPTION	SHEET NO.
1	07/26/19	REVISED SHEET	01.04.115.A1

THE INFORMATION, INCLUDING ESTIMATED QUANTITIES OF WORK, SHOWN ON THESE SHEETS IS BASED ON LIMITED INVESTIGATIONS BY THE STATE AND IS IN NO WAY WARRANTED TO INDICATE THE CONDITIONS OF ACTUAL QUANTITIES OF WORK WHICH WILL BE REQUIRED.

Plotted Date: 7/24/2019

DESIGNER/DRAFTER: REM
CHECKED BY: RJE
SCALE AS NOTED

STATE OF CONNECTICUT
DEPARTMENT OF TRANSPORTATION

Filename: ...\S-115 (ARCH SPAN POST DETAILS).dgn

SIGNATURE/BLOCK:

STV 100 Years
STV INCORPORATED
185 PLAINS ROAD, SUITE 208E
MILFORD, CT 06461
(203) 375-0521

PROJECT TITLE:
REHABILITATION OF THE APPROACH SPANS FOR ARRIGONI BRIDGE NO. 00524

TOWN: **MIDDLETOWN PORTLAND**

DRAWING TITLE: **ARCH SPAN POST DETAILS**

PROJECT NO. 0082-0312
DRAWING NO. S-115
SHEET NO. 01.04.115.A1

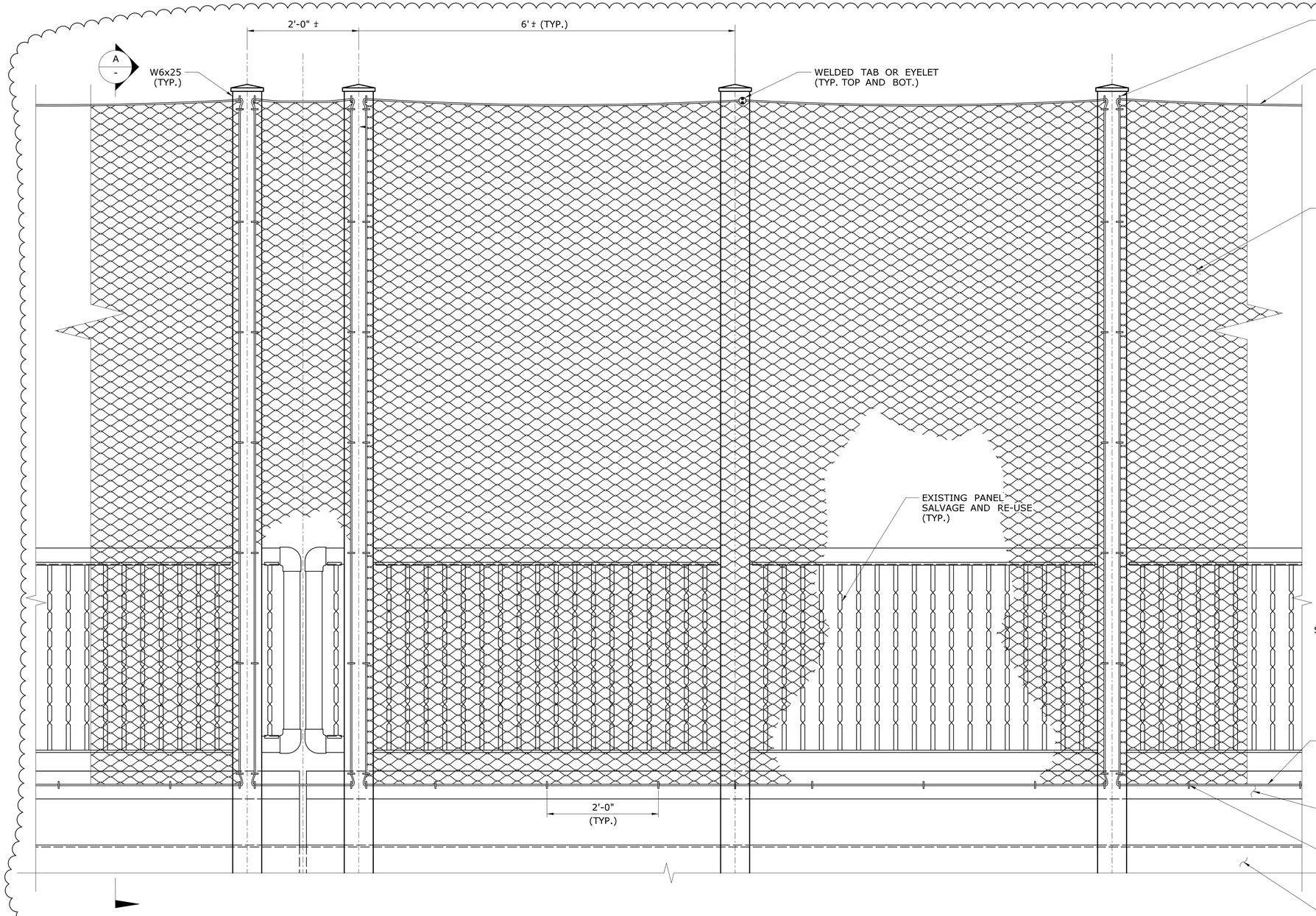

FASCIA SIDE ELEVATION VIEW SPANS 12 THRU 14
CABLE MESH ATTACHMENT TO PEDESTRIAN RAIL

SCALE: 1" = 1'-0"

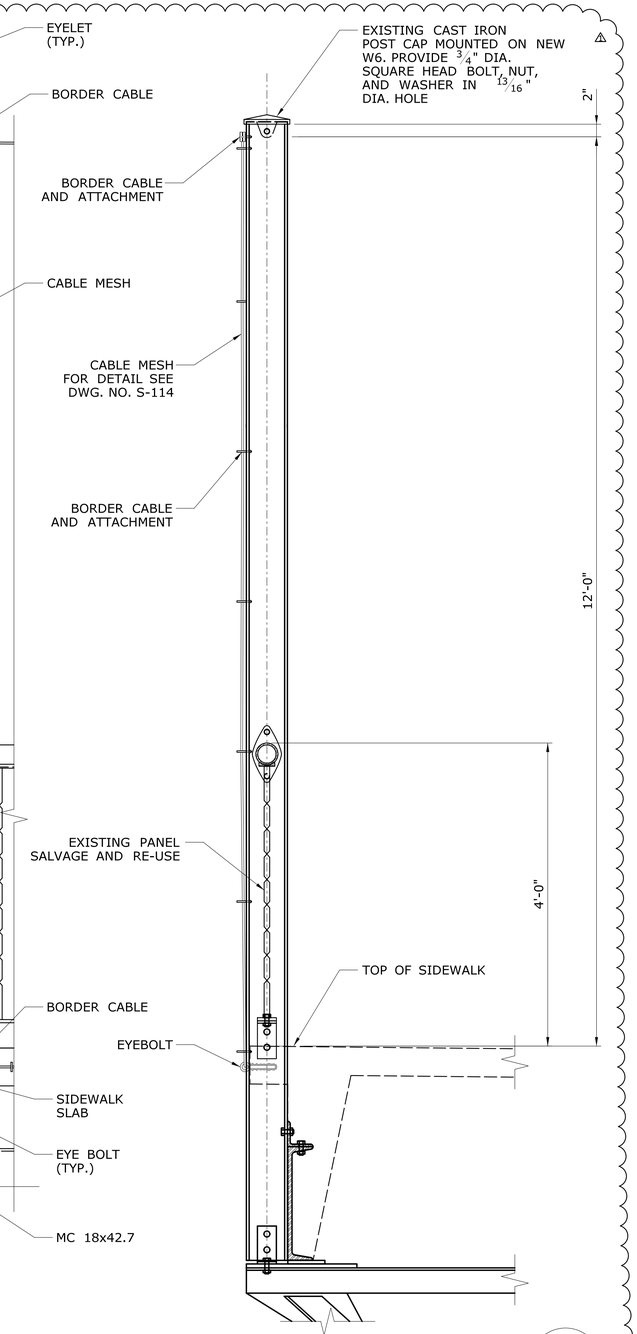

SECTION RAILING

SCALE: 1" = 1'-0"

A
-

ADDENDUM NO. 1

REV.	DATE	REVISION DESCRIPTION	SHEET NO.
1	07/26/19	REVISED SHEET	01.04.116.A1

THE INFORMATION, INCLUDING ESTIMATED QUANTITIES OF WORK, SHOWN ON THESE SHEETS IS BASED ON LIMITED INVESTIGATIONS BY THE STATE AND IS IN NO WAY WARRANTED TO INDICATE THE CONDITIONS OF ACTUAL QUANTITIES OF WORK WHICH WILL BE REQUIRED.

Plotted Date: 7/24/2019

DESIGNER/DRAFTER: REM
CHECKED BY: RJE
SCALE AS NOTED

STATE OF CONNECTICUT
DEPARTMENT OF TRANSPORTATION

Filename: ..\S-116 (PROPOSED RAILING DETAILS).dgn

SIGNATURE/BLOCK:

STATE OF CONNECTICUT
RICHARD E. SHEPHERD
#121175
LICENSED PROFESSIONAL ENGINEER

STV 100 Years
STV INCORPORATED
185 PLAINS ROAD, SUITE 208E
MILFORD, CT 06461
(203) 375-0521

PROJECT TITLE:
REHABILITATION OF THE APPROACH SPANS FOR ARRIGONI BRIDGE NO. 00524

TOWN:
MIDDLETOWN
PORTLAND

DRAWING TITLE:
PROPOSED RAILING DETAILS

PROJECT NO. 0082-0312
DRAWING NO. S-116
SHEET NO. 01.04.116.A1

NOTES:

1. PROPOSED L6x6x½ HOT DIPPED GALVANIZED IN ACCORDANCE WITH ASTM A123. COST SHALL BE INCLUDED UNDER THE ITEM "PROTECTIVE FENCE".
2. PROTECTIVE FENCE BRACING REQUIREMENTS SHALL BE DETERMINED BY THE MANUFACTURER OF THE CABLE MESH.
3. 12 FT. PROTECTIVE FENCE SHOWN IN SECTION. 8 FT. PROTECTIVE FENCE SECTION SIMILAR.
4. PROTECTIVE FENCE BRACING WILL NOT BE MEASURED FOR PAYMENT. THE COST SHALL BE INCIDENTAL TO THE PROTECTIVE FENCE.

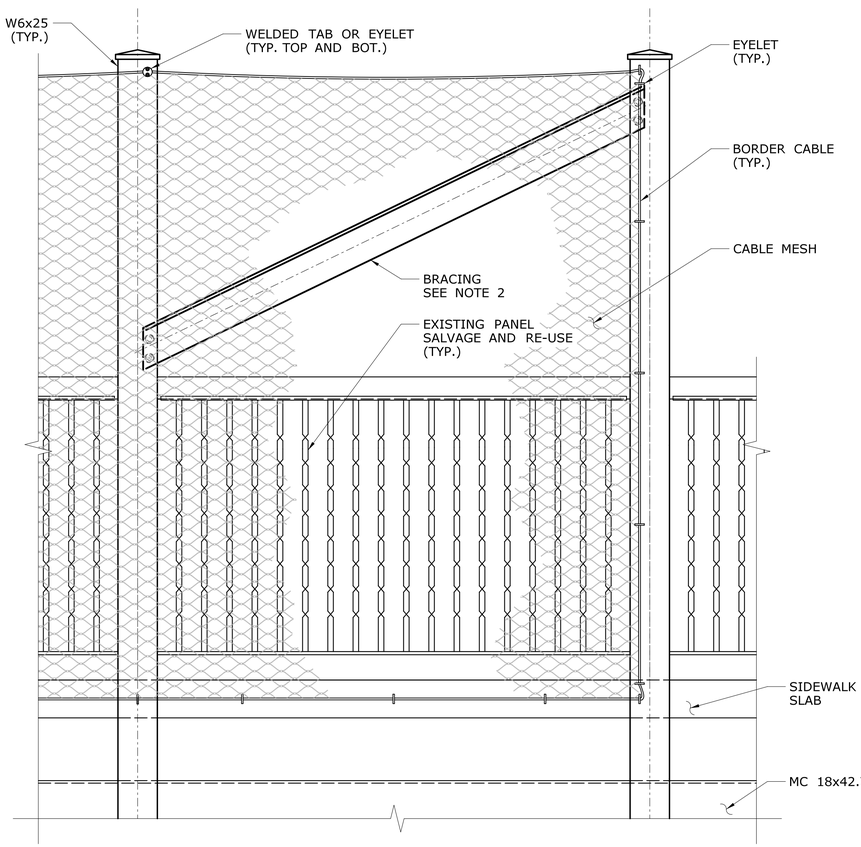

8' PEDESTRIAN FENCE

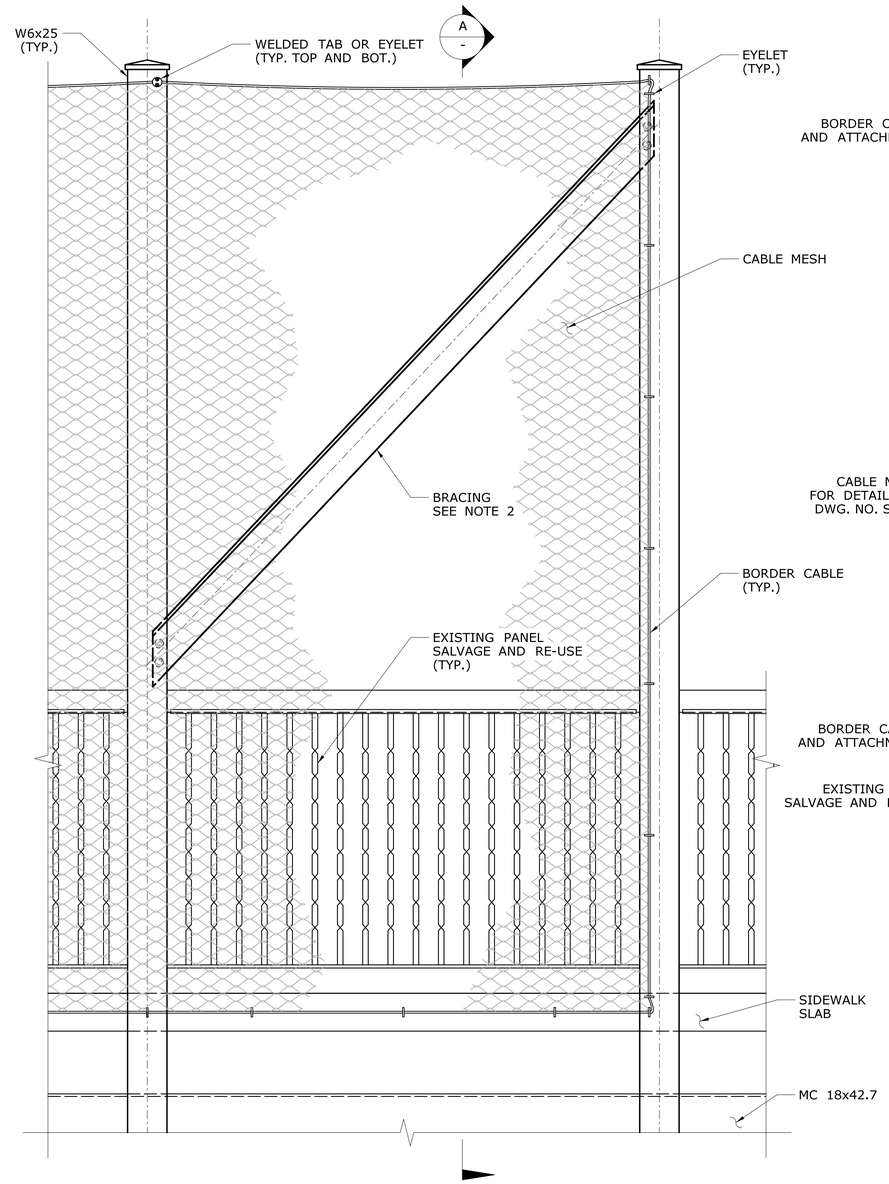

12' PEDESTRIAN FENCE

BRACING DETAIL
CABLE MESH PROTECTIVE FENCE
SCALE: 1" = 1'-0"

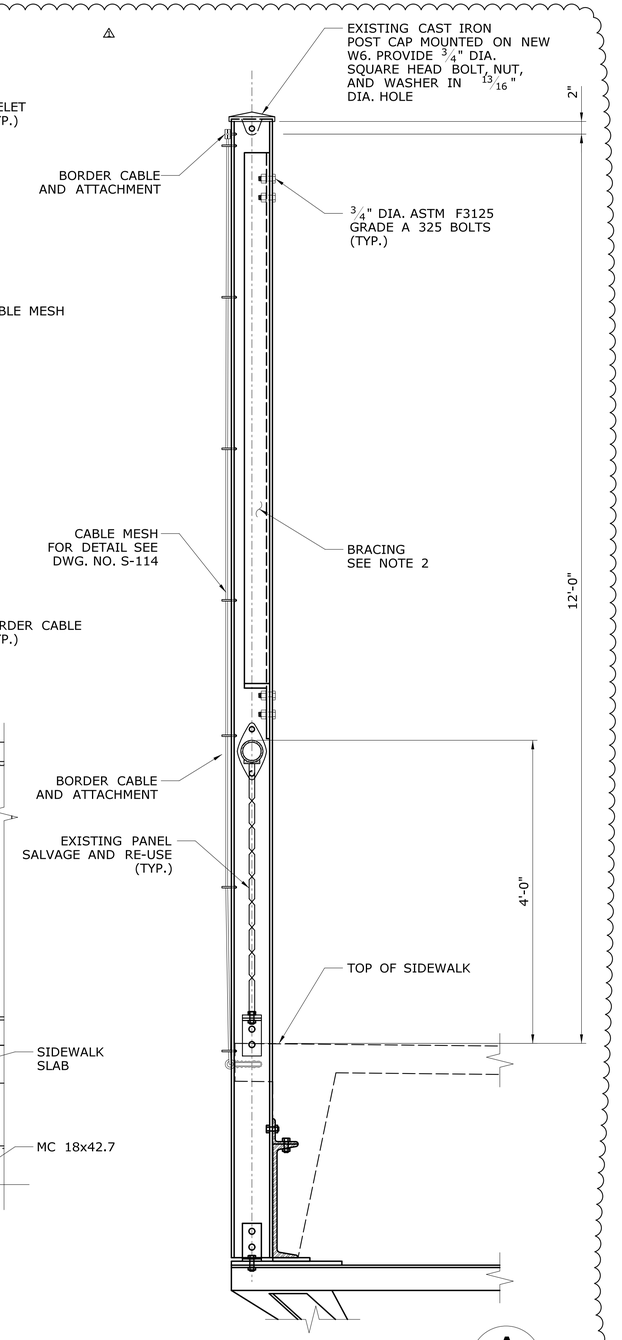

SECTION
SCALE: 1" = 1'-0"
A
-

ADDENDUM NO. 1

REV.	DATE	REVISION DESCRIPTION	SHEET NO.
1	07/26/19	REVISED SHEET	01.04.117.A1

THE INFORMATION, INCLUDING ESTIMATED QUANTITIES OF WORK, SHOWN ON THESE SHEETS IS BASED ON LIMITED INVESTIGATIONS BY THE STATE AND IS IN NO WAY WARRANTED TO INDICATE THE CONDITIONS OF ACTUAL QUANTITIES OF WORK WHICH WILL BE REQUIRED.

Plotted Date: 8/1/2019

DESIGNER/DRAFTER: REM
CHECKED BY: RJE
SCALE AS NOTED

STATE OF CONNECTICUT
DEPARTMENT OF TRANSPORTATION

Filename: ...\S-117 (PROPOSED RAILING END DETAILS).dgn

SIGNATURE/BLOCK:

STV 100 Years
STV INCORPORATED
185 PLAINS ROAD, SUITE 208E
MILFORD, CT 06461
(203) 375-0521

PROJECT TITLE:
REHABILITATION OF THE APPROACH SPANS FOR ARRIGONI BRIDGE NO. 00524

TOWN: **MIDDLETOWN PORTLAND**

DRAWING TITLE: **PROPOSED RAILING END DETAILS**

PROJECT NO. 0082-0312
DRAWING NO. S-117
SHEET NO. 01.04.117.A1

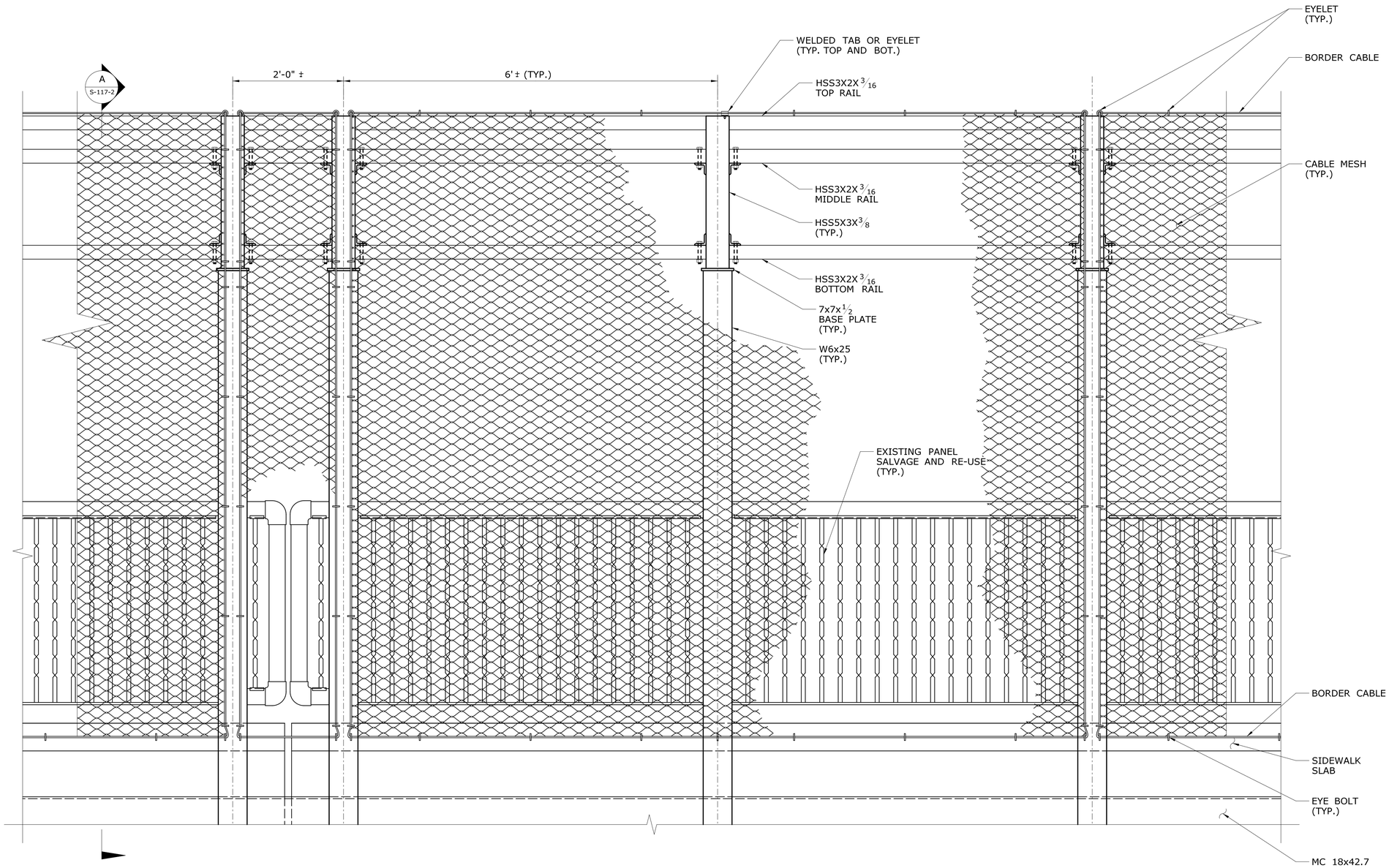

FASCIA SIDE ELEVATION VIEW
CABLE MESH ATTACHMENT TO PEDESTRIAN RAIL

SCALE: 1" = 1'-0"

NOTE:

1. FROM THE DETAILS SHOWN TO APPLY STA. 105+58 TO STA. 107+90 LEFT, AND STA. 106+08 TO STA. 107+90 RIGHT, AND ARE APPROXIMATE. THE EXACT LIMITS SHALL BE DETERMINED IN THE FIELD BY THE ENGINEER.

NEW SHEET ADDED BY ADDENDUM NO. 1

REV.	DATE	REVISION DESCRIPTION	SHEET NO.

THE INFORMATION, INCLUDING ESTIMATED QUANTITIES OF WORK, SHOWN ON THESE SHEETS IS BASED ON LIMITED INVESTIGATIONS BY THE STATE AND IS IN NO WAY WARRANTED TO INDICATE THE CONDITIONS OF ACTUAL QUANTITIES OF WORK WHICH WILL BE REQUIRED.

Plotted Date: 7/30/2019

DESIGNER/DRAFTER: REM
CHECKED BY: RJE
SCALE AS NOTED

STATE OF CONNECTICUT
DEPARTMENT OF TRANSPORTATION

Filename: ...\S-117-1 (CURVED PEDESTRIAN RAIL FENCE DETAILS -1).dgn

SIGNATURE/BLOCK:

STV 100 Years
STV INCORPORATED
185 PLAINS ROAD, SUITE 208E
MILFORD, CT 06461
(203) 375-0521

PROJECT TITLE:
REHABILITATION OF THE APPROACH SPANS FOR ARRIGONI BRIDGE NO. 00524

TOWN: **MIDDLETOWN PORTLAND**

DRAWING TITLE: **CURVED PEDESTRIAN RAIL FENCE DETAILS - 1**

PROJECT NO. 0082-0312
DRAWING NO. S-117-1
SHEET NO. 01.04.117-1.A1

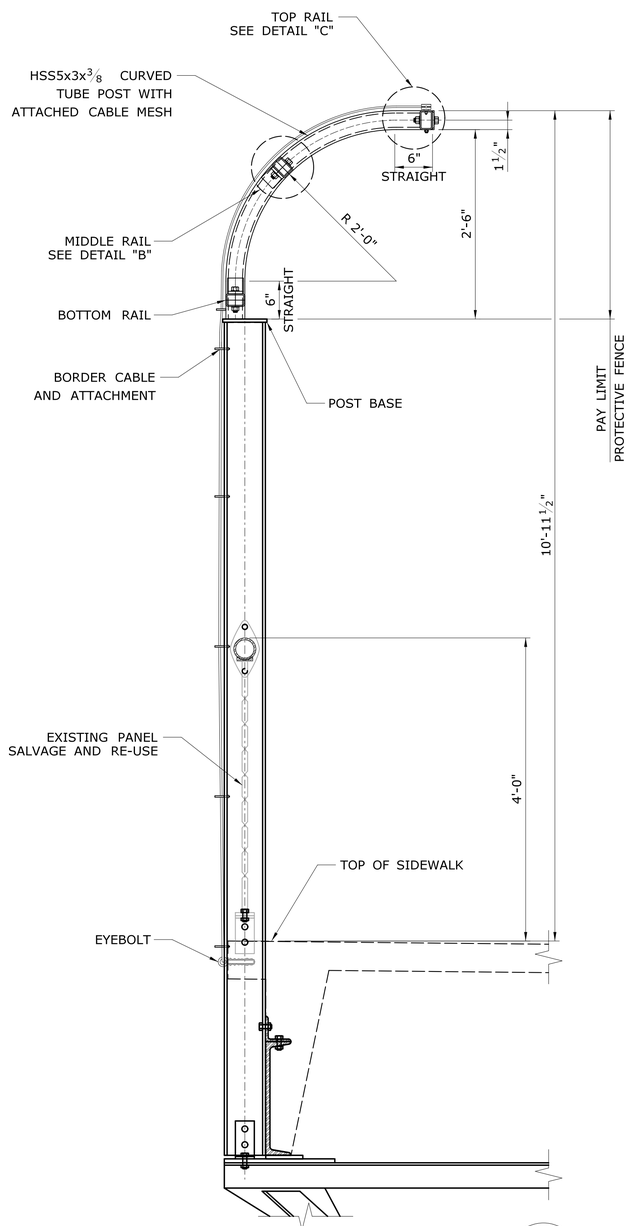

SECTION RAILING
SCALE: 1" = 1'-0"
A
-

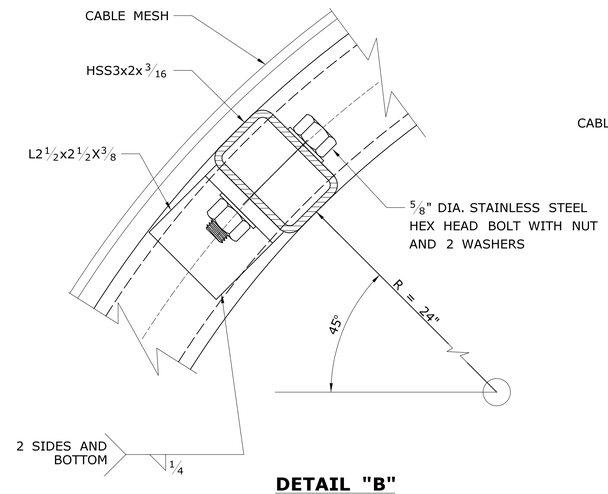

DETAIL "B"
SCALE: 6" = 1'-0"

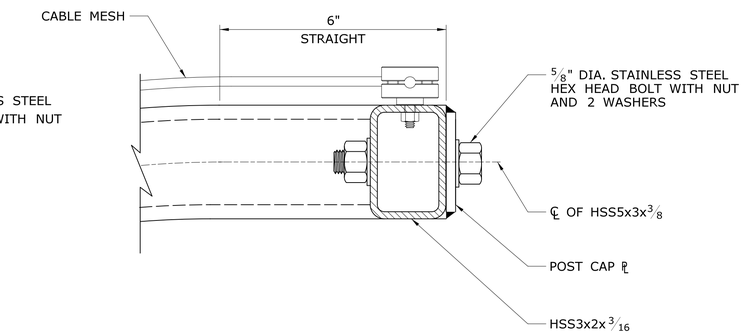

DETAIL "C"
SCALE: 6" = 1'-0"

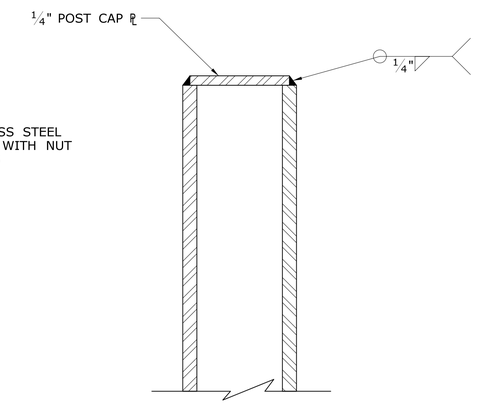

SECTION
SCALE: 6" = 1'-0"
D
-

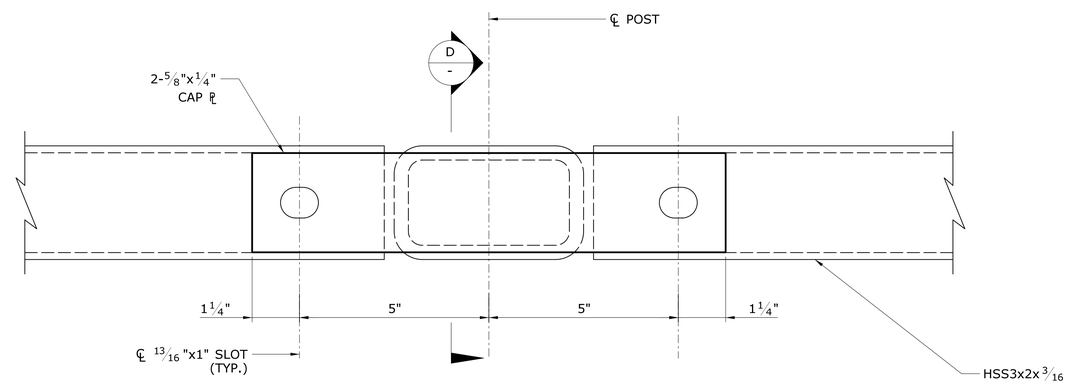

POST CAP DETAIL
SCALE: 6" = 1'-0"

NOTES:

1. FOR LOCATION OF THE CURVED PEDESTRIAN RAIL FENCE SEE DWG. NO. S-110.
2. FOR MATERIAL DESIGNATIONS SEE SPECIAL PROVISIONS "PROTECTIVE FENCE".
3. THE RAILING POSTS, RAILS AND HARDWARE SHALL BE PAID FOR UNDER THE ITEM "PROTECTIVE FENCE".
4. CABLE MESH AND ATTACHMENT HARDWARE SHALL BE PAID FOR UNDER THE ITEM "ANTI-CLIMBING MESH".

NEW SHEET ADDED BY ADDENDUM NO. 1

REV.	DATE	REVISION DESCRIPTION	SHEET NO.

THE INFORMATION, INCLUDING ESTIMATED QUANTITIES OF WORK, SHOWN ON THESE SHEETS IS BASED ON LIMITED INVESTIGATIONS BY THE STATE AND IS IN NO WAY WARRANTED TO INDICATE THE CONDITIONS OF ACTUAL QUANTITIES OF WORK WHICH WILL BE REQUIRED.

Plotted Date: 8/1/2019

DESIGNER/DRAFTER: REM
CHECKED BY: RJE
SCALE AS NOTED

STATE OF CONNECTICUT
DEPARTMENT OF TRANSPORTATION

Filename: ...\S-117-2 (CURVED PEDESTRIAN RAIL FENCE DETAILS -2).dgn

SIGNATURE/ BLOCK:

STV 100 Years
STV INCORPORATED
185 PLAINS ROAD, SUITE 208E
MILFORD, CT 06461
(203) 375-0521

PROJECT TITLE:
REHABILITATION OF THE APPROACH SPANS FOR ARRIGONI BRIDGE NO. 00524

TOWN: **MIDDLETOWN PORTLAND**

DRAWING TITLE: **CURVED PEDESTRIAN RAIL FENCE DETAILS - 2**

PROJECT NO. 0082-0312
DRAWING NO. S-117-2
SHEET NO. 01.04.117-2.A1