TABLE OF SPLICE LENGTHS		
	BAR SIZE	MIN. SPLICE LENGTH
REINFORCEMENT SPACING @ ≥ 6" O.C. **	#4	1'-7"
	#5	2'-0"
	#6	2'-4"
	#7	2'-9"
	#8	3'-2"

** FOR BARS SPACED "LESS THAN" 6" O.C. MULTIPLY TABLE VALUES BY 1.25

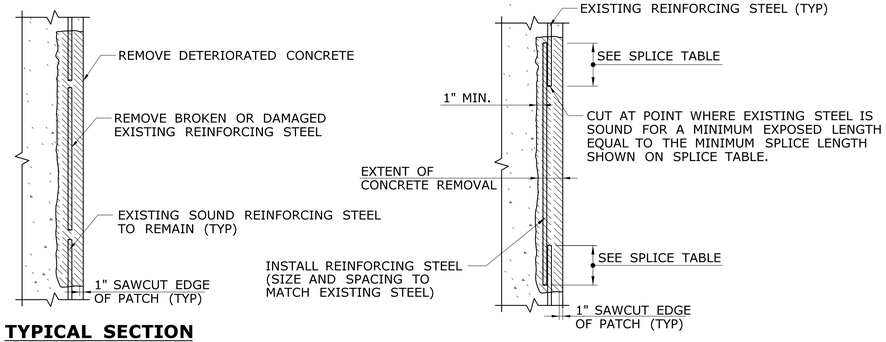

TYPICAL SECTION DAMAGED REINFORCING

TYPICAL SPLICE DETAIL

REINFORCING REPAIR DETAIL

NOT TO SCALE

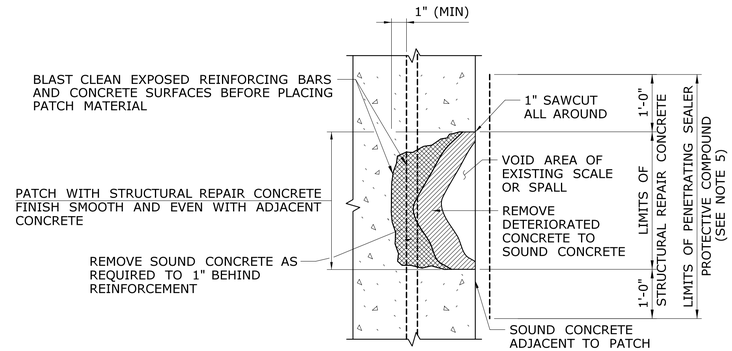

SUBSTRUCTURE REPAIR

NOT TO SCALE

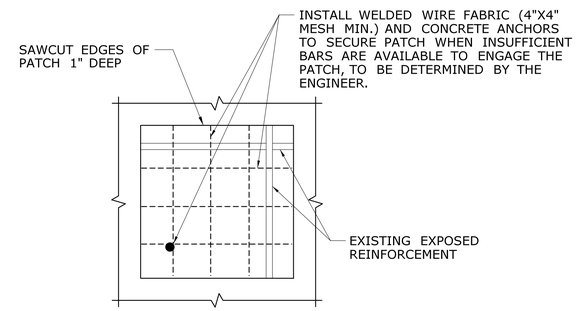

SECURING SUBSTRUCTURE REPAIR PATCH WITH WELDED WIRE FABRIC

NOT TO SCALE

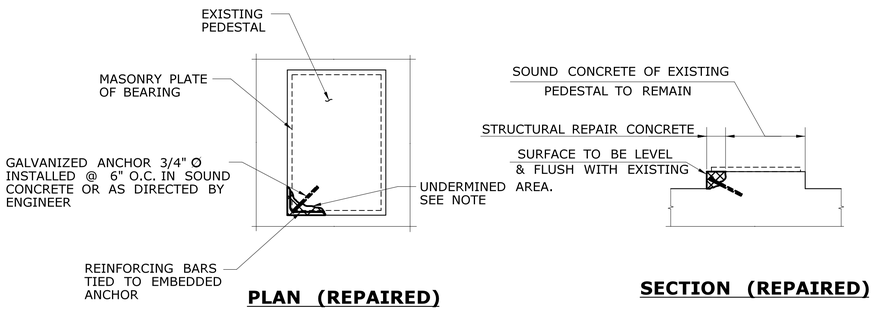

PLAN (REPAIRED)

SECTION (REPAIRED)

NOTE: IF MORE THAN 10% OF THE AREA OF THE STEEL MASONRY PLATE IS UNDERMINED, THE ENGINEER SHALL BE NOTIFIED IMMEDIATELY.

TYPICAL PEDESTAL CONCRETE REPAIR

NOT TO SCALE

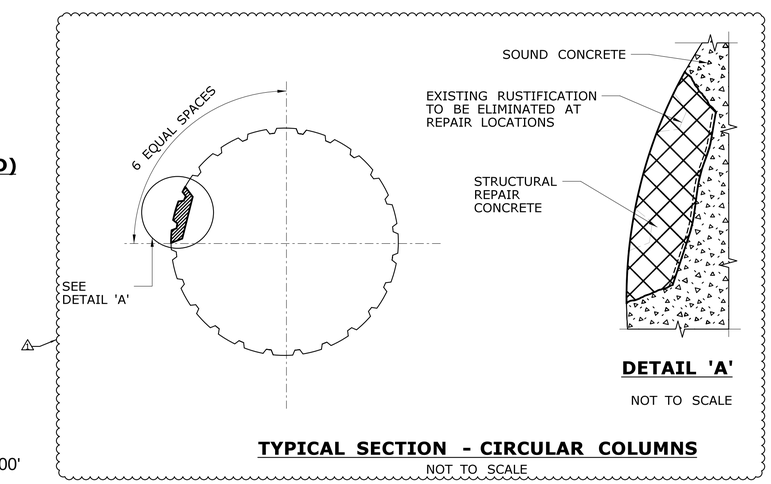

DETAIL 'A'

NOT TO SCALE

TYPICAL SECTION - CIRCULAR COLUMNS

NOT TO SCALE

CONCRETE REPAIR NOTES:

THE CONTRACTOR SHALL DETERMINE THE LOCATIONS OF UNSOUND OR DETERIORATED CONCRETE TO BE REPAIRED AND OBTAIN APPROVAL FROM THE ENGINEER. THE METHOD USED TO DELINEATE AREAS OF CONCRETE TO BE REPAIRED SHALL NOT PERMANENTLY MARK THE CONCRETE, LEAVE ANY RESIDUE AFTER REMOVAL, OR REQUIRE HARSH CHEMICALS TO REMOVE.

THE CONTRACTOR SHALL REMOVE THE DETERIORATED CONCRETE IN ACCORDANCE WITH THE GUIDELINES SET IN THESE NOTES AND IN THE SPECIAL PROVISIONS AND THE ENGINEER WILL DETERMINE THE TYPE OF REPAIR REQUIRED FOR EACH AREA.

THE CONTRACTOR SHALL SUPPLY WHATEVER MEANS NECESSARY, INCLUDING BUT NOT LIMITED TO LADDERS, LIFTS AND TRAFFIC PROTECTION FOR THE ENGINEER TO SAFELY ACCESS VARIOUS AREAS FOR INSPECTION. THE COST OF PROVIDING ACCESS FOR THE INSPECTION IS INCLUDED IN THE GENERAL COST OF THE PROJECT.

SUBSTRUCTURE REPAIR CONCRETE REPAIRS SHALL BE USED FOR SUBSTRUCTURE REPAIRS.

VARIABLE QUANTITY PARTIAL DEPTH PATCH AND VARIABLE QUANTITY FULL DEPTH PATCH DETAILS SHOWN IN DWG. NO. S-06 SHALL BE USED FOR ALL DECK REPAIRS.

SUBSTRUCTURE REPAIR CONCRETE: THIS TYPE OF REPAIR SHALL BE USED FOR ALL DETERIORATED AREAS, OR AS DIRECTED BY THE ENGINEER, WHERE THE REINFORCING BARS ARE SUFFICIENTLY EXPOSED TO ENGAGE AND ANCHOR THE PATCHING MATERIAL. IF THERE IS NOT SUFFICIENT REINFORCEMENT AVAILABLE, THEN GALVANIZED MECHANICAL ANCHORS @ 6" O.C. (OR AS DIRECTED BY THE ENGINEER) SHALL BE INSTALLED INTO THE SOUND CONCRETE TO ENGAGE THE WELDED WIRE FABRIC.

BEFORE APPLYING THE PATCHING MATERIAL, THE REINFORCING BARS SHALL BE BLAST CLEANED AND EMBEDDED GALVANIC ANODES INSTALLED.

REINFORCING BAR REPAIRS: REINFORCING WHICH IS DETERMINED BY THE ENGINEER TO BE IN NEED OF REPLACEMENT, SHALL BE REMOVED TO A POINT WHERE IT IS SOUND. THE PATCH SHALL EXTEND A SUFFICIENT DISTANCE BEYOND THIS POINT TO DEVELOP A SPLICE LENGTH SPECIFIED IN THE TABLE ON THIS SHEET. WELDING TO EXISTING REINFORCING BARS SHALL NOT BE ALLOWED.

RESTRICTIONS: THE REMOVAL OF DETERIORATED CONCRETE SHALL PROCEED AS DIRECTED BY THE ENGINEER. IF REMOVAL EXTENDS MORE THAN $1\frac{1}{2}$" BEHIND THE MAIN REINFORCING BARS, THE REMOVAL WORK SHALL BE STOPPED AND THE ENGINEER NOTIFIED IMMEDIATELY.

MAXIMUM HAMMER SIZE USED TO REMOVE DETERIORATED CONCRETE SHALL BE 15 POUNDS.

AT PIER COLUMNS AND CAPS, IF REMOVAL OF DETERIORATED CONCRETE EXTENDS INSIDE THE MAIN REINFORCING, REMOVAL SHALL BE LIMITED TO ONE FACE OF THE MEMBER AT A TIME AND A MAXIMUM AREA OF 4 S.F. REMOVAL MAY BE PERMITTED ON MORE THAN ONE FACE OF THE COLUMN SIMULTANEOUSLY IF THE AREAS OF REMOVAL ARE NOT ADJACENT TO OR DIRECTLY OPPOSITE ONE ANOTHER.

IF A REBAR SPLICE IS ENCOUNTERED DURING REMOVAL OF CONCRETE IN A PIER COLUMN OR CAP, WORK AT THAT LOCATION SHALL BE STOPPED AND THE ENGINEER SHALL BE NOTIFIED. WORK AT THAT LOCATION SHALL NOT PROCEED UNTIL DIRECTION IS GIVEN BY THE ENGINEER.

BEFORE EXPOSING THE MAIN REINFORCING BARS OF MORE THAN ONE PIER COLUMN AT THE SAME TIME, THE ENGINEER SHALL BE CONSULTED.

COLUMN REPAIR RESTRICTIONS:

COLUMNS SHALL BE PATCHED STARTING AT THE BOTTOM OF THE COLUMN WORKING YOUR WAY TOWARDS THE TOP OF THE COLUMN. THE MAXIMUM HEIGHT OF EACH REPAIR SHALL BE LIMITED TO 5'-0".

COLUMNS SHALL BE PATCHED ONE FACE AT A TIME. NO MORE THAN 10% OF THE CROSS SECTIONAL AREA OF A COLUMN CAN BE REMOVED AS PART OF ONE PATCH. IF DEPTH OF REMOVAL IS EXCESSIVE, THAT FACE OF THE COLUMN MAY NEED TO BE PATCHED IN SECTIONS.

A PATCH SHALL REACH ITS DESIRED STRENGTH (MINIMUM COMPRESSIVE STRENGTH AT 28 DAYS) BEFORE REMOVAL OPERATIONS FOR THE NEXT PATCH BEGIN. THERE WILL BE NO ADDITIONAL PAYMENT IF A SPECIAL SEQUENCE IS REQUIRED FOR PERFORMING CONCRETE REPAIR.

PIER CAP RESTRICTIONS:

AT THE PIER CAP, NO MORE THAN ONE THIRD OF THE UNDERSIDE OF THE CAP SHALL BE REMOVED AT ONE TIME. IF THE ENTIRE UNDERSIDE OF THE CAP IS TO BE PATCHED, BEGIN AT THE COLUMN AND PATCH ONE-THIRD OF THE CLEAR SPAN OF THE CAP. AFTER THE PATCH HAS GAINED SUFFICIENT STRENGTH (MINIMUM COMPRESSIVE STRENGTH AT 28 DAYS), BEGIN AT THE OPPOSITE END OF THE CAP AND PATCH ONE THIRD OF THE SPAN. THE MIDDLE THIRD SHALL BE PATCHED LAST.

PAY ITEM NOTES:

1. ANODES SHALL BE PAID FOR UNDER THE ITEM "EMBEDDED GALVANIC ANODES".
2. SAWCUTTING SHALL BE INCLUDED IN THE CONTRACT BID PRICE OF THE APPLICABLE REPAIR PAY ITEM.
3. REINFORCING BARS WILL BE PAID FOR AT THE CONTRACT UNIT PRICE FOR "VARIABLE QUANTITY DEFORMED STEEL BARS".
4. GALVANIZED ANCHORS SHALL BE PAID FOR UNDER THE ITEM "STRUCTURAL REPAIR CONCRETE".
5. PENETRATING SEALER PROTECTIVE COMPOUND SHALL BE APPLIED AT SUBSTRUCTURE REPAIR LOCATIONS TO THE LIMITS AS SHOWN ON THIS SHEET. THIS SHALL BE PAID FOR UNDER THE ITEM "PENETRATING SEALER PROTECTIVE COMPOUND".

Jagdeesh Gopal
2019.09.03
16:24:58-04'00'

ADDENDUM NO. 2

REV.	DATE	REVISION DESCRIPTION	SHEET NO.
-	-	-	-
-	-	-	-
-	-	-	-
-	-	-	-
-	-	-	-
1	08/30/19	ADDED DETAIL FOR CIRCULAR COLUMN REPAIRS	04.04.A2

THE INFORMATION, INCLUDING ESTIMATED QUANTITIES OF WORK, SHOWN ON THESE SHEETS IS BASED ON LIMITED INVESTIGATIONS BY THE STATE AND IS IN NO WAY WARRANTED TO INDICATE THE CONDITIONS OF ACTUAL QUANTITIES OF WORK WHICH WILL BE REQUIRED.

Plotted Date: 8/29/2019

DESIGNER/DRAFTER: DK
CHECKED BY: JG
SCALE AS NOTED

STATE OF CONNECTICUT
DEPARTMENT OF TRANSPORTATION

Filename: ...\SB_MSH_Br00032_135_334_Concrete_Repair - 1 of 3_A2.dgn

SIGNATURE/BLOCK:

GM2 ASSOCIATES, INC.
115 GLASTONBURY BLVD.
GLASTONBURY, CT 06033

PROJECT TITLE:
REHABILITATION OF BRIDGE NO. 00032, I-95 OVER METRO-NORTH RAILROAD AND LOCAL STREETS

TOWN: **STAMFORD**

DRAWING TITLE: **CONCRETE REPAIR DETAILS 1 OF 3**

PROJECT NO. 135-334
DRAWING NO. S-04
SHEET NO. 04.04.A2

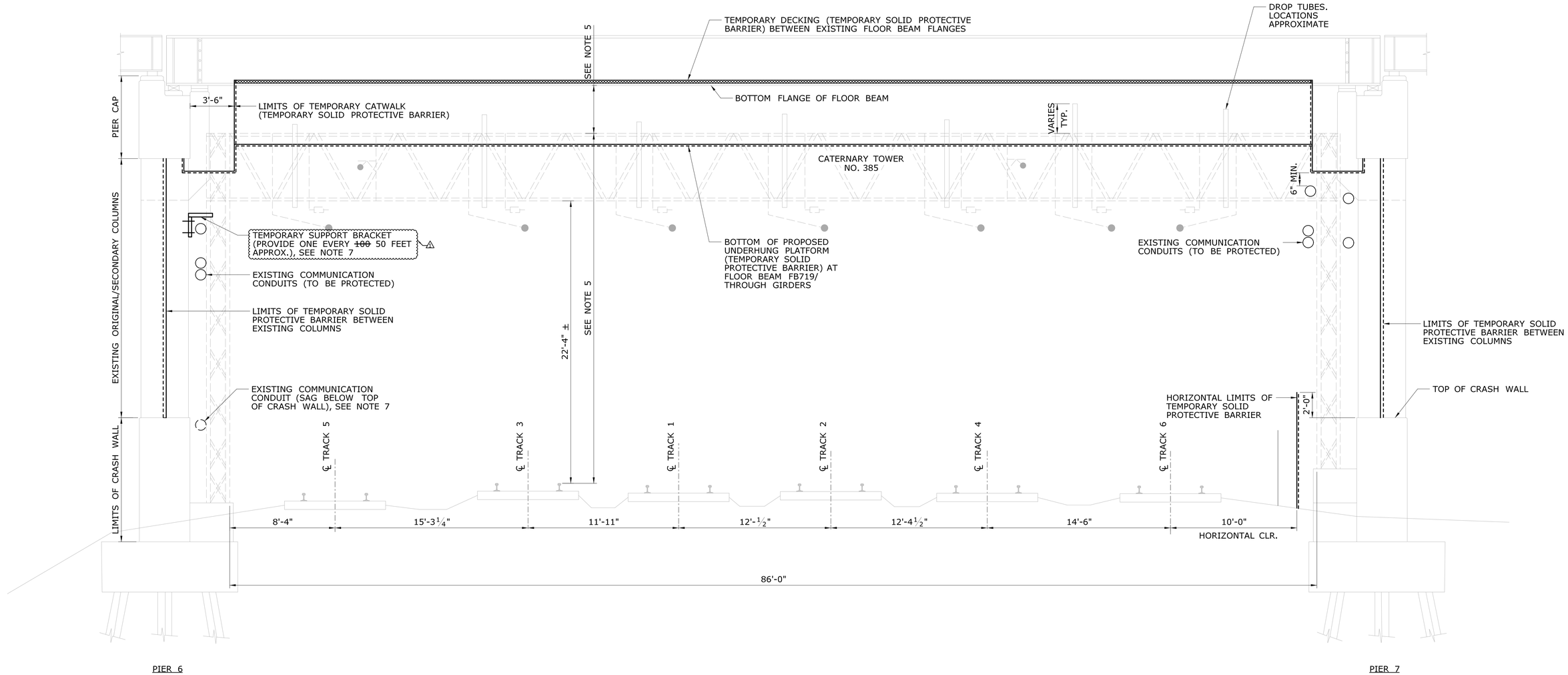

NOTES:

1. THE INFORMATION SHOWN IS BASED ON STAMFORD STATION CENTER PLATFORMS CATENARY REPLACEMENT ERECTION DIAGRAM - 385 PLANS DATED 08/15/1995 DRAWING NO. ED-385. THE CONTRACTOR SHALL FIELD VERIFY ACTUAL CONDITIONS AS NECESSARY TO PERFORM PROPOSED CONSTRUCTION.
2. EQUIPMENT USED FOR WORK ON AND ADJACENT TO THE RAILROAD RIGHT OF WAY SHALL BE GROUNDED AS REQUIRED BY METRO-NORTH COMMUTER RAILROAD.
3. THE TEMPORARY SOLID PROTECTIVE BARRIER SHOWN IS FOR CONCEPTUAL PURPOSES ONLY. THE CONTRACTOR SHALL DESIGN AND SUBMIT A TEMPORARY SOLID PROTECTIVE BARRIER FOR METRO-NORTH COMMUTER RAILROAD REVIEW AND APPROVAL. THE CONTRACTOR DESIGN SHALL CONCEPTUALLY BE SIMILAR TO WHAT IS SHOWN ON THESE PLANS. THIS CONCEPT HAS BEEN REVIEWED BY METRO-NORTH. THE CONTRACTOR IS RESPONSIBLE FOR ANY DELAYS IN OBTAINING APPROVAL FOR ANY DESIGN THAT IS SUBSTANTIALLY DIFFERENT FROM WHAT IS SHOWN HEREIN.
4. THERE ARE WIRES ALONG THE FACE OF PIERS 6 AND 7. THE CONTRACTOR SHALL FIELD LOCATE THE EXISTING WIRES AND CATENARY TOWER NO. 385. THE EXISTING LOW VOLTAGE/COMMUNICATION WIRES SHALL BE PROTECTED AND MAINTAINED ON THE RAILROAD SIDE OF THE TEMPORARY SOLID PROTECTIVE BARRIER. A MINIMUM OF 6" CLEARANCE SHALL BE MAINTAINED AT ALL TIMES FROM ANY LOW VOLTAGE/COMMUNICATION WIRES.
5. CONTRACTOR TO DETERMINE CLEARANCES BASED ON A CATENARY SYSTEM SURVEY (TO BE PERFORMED BY THE CONTRACTOR). SEE SPECIAL PROVISION FOR ITEM "EXISTING CATENARY SYSTEM SURVEY".
6. CATENARIES AND ANY EXISTING ELECTRICAL APPURTENANCES UNDER THE BRIDGE SHALL BE PROTECTED AT ALL TIMES.
7. CONTRACTOR TO INSTALL TEMPORARY SUPPORTING BRACKET ON THE EXISTING PIER COLUMNS FOR PIER 6 RAILROAD SIDE FOR VERTICAL ADJUSTMENT OF THE COMMUNICATION CONDUIT IN FRONT OF PIER 6. COST TO BE INCLUDED UNDER ITEM "TEMPORARY PROTECTIVE BARRIER (EXISTING BRIDGE)" ~~GENERAL COST OF THE WORK.~~ CONTRACTOR IS RESPONSIBLE ONLY FOR INSTALLATION AND REMOVAL OF THE BRACKETS, METRO-NORTH WILL BE RESPONSIBLE TO VERTICALLY ADJUST THE CONDUIT. △1
8. THE CONTRACTOR MAY NEED TO TEMPORARILY MOVE THE LOW VOLTAGE/COMMUNICATION WIRES VERTICALLY (+/- 1'-0") TO PERFORM REPAIRS TO PIERS 6 & 7 RAILROAD SIDE. THE CONTRACTOR SHALL SUBMIT A PLAN TO DO SO AND OBTAIN APPROVAL FROM METRO-NORTH PRIOR TO START OF REPAIRS. METRO-NORTH WILL BE RESPONSIBLE TO ADJUST THE CONDUITS VERTICALLY.

SPECIAL REQUIREMENTS REGARDING WORK IN METRO-NORTH TERRITORY:

A. THE CONTRACTOR SHALL SUBMIT FOR APPROVAL BY THE RAILROAD, PLANS, COMPUTATIONS AND DETAILED DESCRIPTION OF HIS MEANS AND METHODS FOR ACCOMPLISHING ALL WORK ON OR ADJACENT TO THE RAILROAD RIGHT OF WAY, INCLUDING METHODS OF PROTECTING RAILROAD TRAFFIC. THE SUGGESTED CONSTRUCTION METHODS, AND SEQUENCES SHOWN ON THE PLANS SHALL BE CONSIDERED ONLY AS A GUIDE. THE CONTRACTOR SHALL DETERMINE AND BE RESPONSIBLE FOR THE ACTUAL CONSTRUCTION METHODS AND SEQUENCING WITH THE APPROVAL OF METRO-NORTH COMMUTER RAILROAD AND THE ENGINEER.

B. THE CONTRACTOR SHALL BE REQUIRED TO DESIGN AND INSTALL A SOLID PROTECTIVE BARRIER TO PROTECT THE RAILROAD FROM ALL CONSTRUCTION INCLUDING; BUT NOT LIMITED TO, PIER 6 & 7 SUBSTRUCTURE REPAIRS, DECK AND STEEL REPAIRS FOR SPAN 7, RECONSTRUCTION OF EXPANSION JOINT ON FB719, ABRASIVE BLAST CLEANING AND FIELD PAINTING OF THROUGH GIRDERS AND BEAM ENDS FOR FLOOR BEAMS AND ABRASIVE BLAST CLEANING AND PAINTING OF FLOOR BEAM FB719. THE TEMPORARY SOLID PROTECTIVE BARRIER LIMITS, MATERIALS, CONSTRUCTION METHODS, MAINTENANCE REQUIREMENTS, ETC., SHALL BE COORDINATED BY THE CONTRACTOR WITH THE RAILROAD TO ENSURE SAFETY AND CONTINUITY OF RAILROAD TRAFFIC.

C. THE CONTRACTOR IS ADVISED THAT THE OVERHEAD ELECTRIFICATION AND THE WIRES ALONG PIERS 6 & 7 WILL REMAIN IN PLACE FOR THE DURATION OF THE ENTIRE PROJECT. THE CONTRACTOR WILL BE PERMITTED LIMITED TRACK AND POWER OUTAGES TO CONSTRUCT AND REMOVE THE TEMPORARY SOLID PROTECTIVE BARRIER AND INSTALL TEMPORARY DECKING BETWEEN FLOOR BEAMS AS REQUIRED AND AS SPECIFIED IN THE SPECIAL PROVISIONS. THESE OUTAGES ARE SUBJECT TO SCHEDULING REQUIREMENTS OF METRO-NORTH COMMUTER RAILROAD.

D. RAILROAD PROTECTIVE SERVICES WILL BE FURNISHED BY THE RAILROAD TO PROTECT THE OPERATION OF TRAIN TRAFFIC DURING THE CONTRACTORS CONSTRUCTION ACTIVITIES WHEN CONSTRUCTION WORK WOULD, IN THE RAILROAD'S OPINION, BE A HAZARD TO RAILROAD OPERATIONS. THERE WILL BE NO CHARGE TO THE CONTRACTOR FOR RAILROAD PROTECTIVE SERVICES PROVIDED. THE COST FOR THESE SERVICES FROM RAILROAD IS INCLUDED UNDER "FORCE ACCOUNT".

E. ALL COSTS ASSOCIATED WITH THE TEMPORARY SOLID PROTECTIVE BARRIER, TEMPORARY DECKING, ANY REGULATORY REQUIREMENTS, TRAFFIC REGULATION, SPECIFICATION ADMINISTRATION, COORDINATION, MATERIALS, AND INCIDENTALS REQUIRED TO FULFILL THE REQUIREMENTS REGARDING WORK IN METRO-NORTH TERRITORY WILL BE PAID UNDER THE ITEM "TEMPORARY PROTECTIVE BARRIER (EXISTING BRIDGE)".

ADDENDUM NO. 2

REV.	DATE	REVISION DESCRIPTION	SHEET NO.
-	-	-	-
-	-	-	-
-	-	-	-
-	-	-	-
-	-	-	-
△1	08/30/19	REVISED NOTE	04.13.A2

THE INFORMATION, INCLUDING ESTIMATED QUANTITIES OF WORK, SHOWN ON THESE SHEETS IS BASED ON LIMITED INVESTIGATIONS BY THE STATE AND IS IN NO WAY WARRANTED TO INDICATE THE CONDITIONS OF ACTUAL QUANTITIES OF WORK WHICH WILL BE REQUIRED.

Plotted Date: 8/29/2019

DESIGNER/DRAFTER: DK
CHECKED BY: JG
NOT TO SCALE

STATE OF CONNECTICUT
DEPARTMENT OF TRANSPORTATION

Filename: ..\SB_MSH_Br00032_135_334_Railroad_span_prot_barrier - 2 of 3_A2.dgn

SIGNATURE/ BLOCK:

GM2 ASSOCIATES, INC.
115 GLASTONBURY BLVD.
GLASTONBURY, CT 06033

STATE OF CONNECTICUT JOSEPH M. GIORDANO LICENSED PROFESSIONAL ENGINEER

PROJECT TITLE:
REHABILITATION OF BRIDGE NO. 00032, I-95 OVER METRO-NORTH RAILROAD AND LOCAL STREETS

TOWN: **STAMFORD**

DRAWING TITLE: **RAILROAD SPAN PROTECTIVE BARRIER 2 OF 3**

PROJECT NO. **135-334**
DRAWING NO. **S-13**
SHEET NO. **04.13.A2**

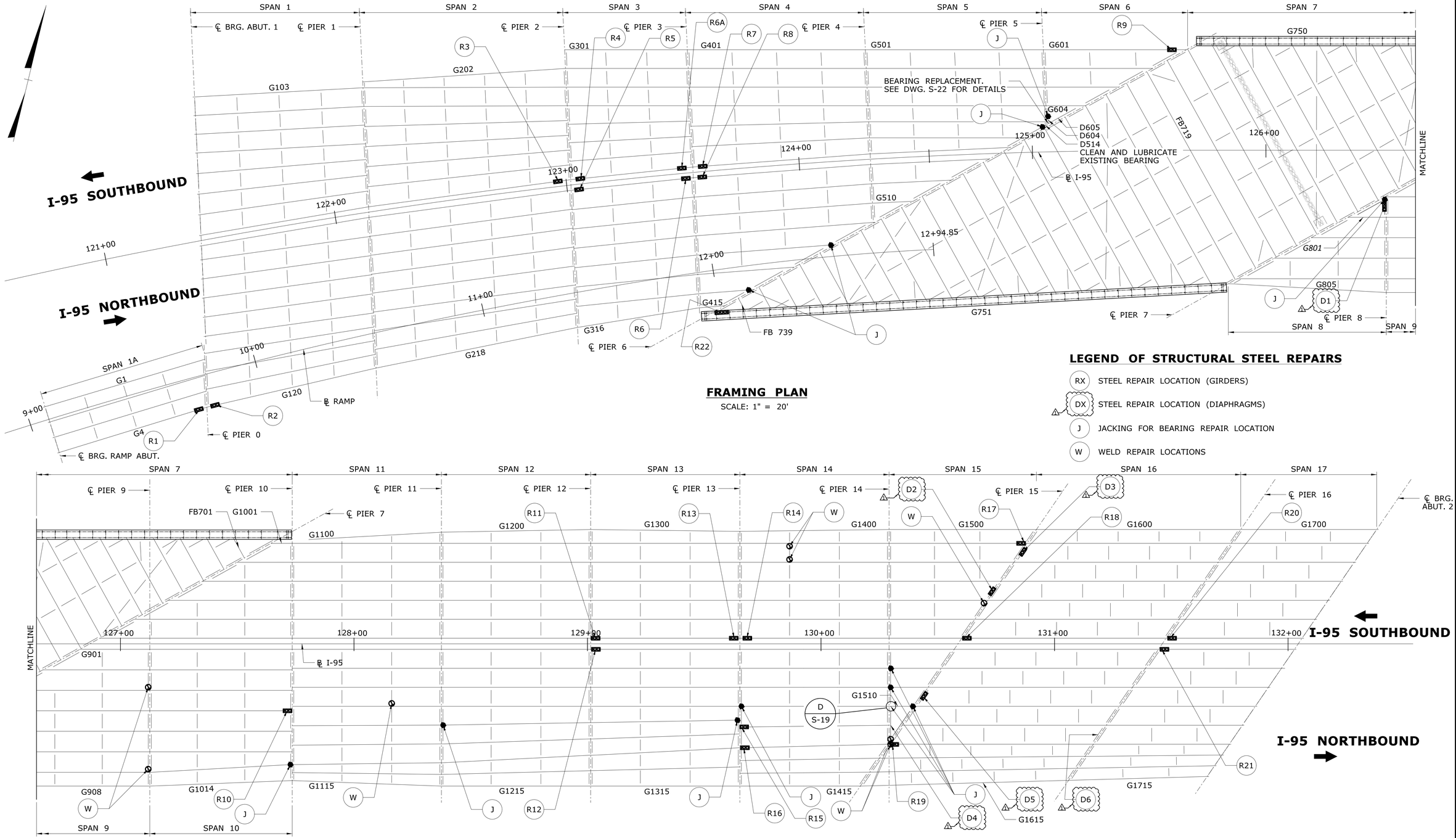

FRAMING PLAN

SCALE: 1" = 20'

LEGEND OF STRUCTURAL STEEL REPAIRS

- (RX) STEEL REPAIR LOCATION (GIRDERS)
- (DX) STEEL REPAIR LOCATION (DIAPHRAGMS)
- (J) JACKING FOR BEARING REPAIR LOCATION
- (W) WELD REPAIR LOCATIONS

ADDENDUM NO. 2

REV.	DATE	REVISION DESCRIPTION	SHEET NO.
-	-	-	-
-	-	-	-
-	-	-	-
-	-	-	-
-	-	-	-
1	08/30/19	CLARIFIED DIAPHRAGM REPAIR LOCATION LEGEND	04.15.A2

THE INFORMATION, INCLUDING ESTIMATED QUANTITIES OF WORK, SHOWN ON THESE SHEETS IS BASED ON LIMITED INVESTIGATIONS BY THE STATE AND IS IN NO WAY WARRANTED TO INDICATE THE CONDITIONS OF ACTUAL QUANTITIES OF WORK WHICH WILL BE REQUIRED.

Plotted Date: 8/29/2019

DESIGNER/DRAFTER: **DK**

CHECKED BY: **JG**

SCALE AS NOTED

STATE OF CONNECTICUT
DEPARTMENT OF TRANSPORTATION

Filename: ..\SB_MSH_Br00032_135_334_Framing_Plan_A2.dgn

SIGNATURE/ BLOCK:

GM2 ASSOCIATES, INC.
115 GLASTONBURY BLVD.
GLASTONBURY, CT 06033

PROJECT TITLE:

REHABILITATION OF BRIDGE NO. 00032, I-95 OVER METRO-NORTH RAILROAD AND LOCAL STREETS

TOWN: **STAMFORD**

DRAWING TITLE: **FRAMING PLAN**

PROJECT NO. **135-334**

DRAWING NO. **S-15**

SHEET NO. **04.15.A2**

STRUCTURAL STEEL REPAIR NOTES:

1. PRIOR TO STARTING ANY OF THE STEEL REPAIR WORK, THE DETERIORATED AREAS SHALL BE CLEANED AS SPECIFIED IN THE SPECIAL PROVISION "LOCALIZED PAINT REMOVAL AND FIELD PAINTING OF EXISTING STEEL"/"ABRASIVE BLAST CLEANING AND FIELD PAINTING OF BEAM ENDS (SITE NO. 1)".
2. THE LENGTH AND WIDTH OF THE NEW PLATE SHALL BE DETERMINED BY THE ENGINEER BASED ON FIELD MEASUREMENTS TAKEN AT THE DETERIORATED LOCATIONS INDICATED ON THE FRAMING PLANS OR AS DETERMINED BY THE ENGINEER IN THE FIELD. THE PLATE SHALL EXTEND 2" MINIMUM BEYOND THE FURTHEST EDGE OF A DETERIORATION. IN ADDITION, THE PLATE SHALL BE LARGE ENOUGH SUCH THAT IT WILL BEAR FIRMLY ON THE EXISTING STEEL COMPONENTS WITH MINIMAL GAPS (THE NEW PLATE SHALL NOT REST ON TAPERED STEEL). SEE NOTE 5 BELOW.
3. THE NEW PLATE(S) SHALL BE WELDED TO THE CLEANED STEEL.
4. ALL STEEL WITHIN THE PAINTING LIMITS, INCLUDING THE NEW PLATES, SHALL RECEIVE THE NEPCOAT APPROVED PAINT SYSTEM. SEE SPECIAL PROVISION "REHABILITATION OF EXISTING STRUCTURAL STEEL" "LOCALIZED PAINT REMOVAL AND FIELD PAINTING OF EXISTING STEEL" FOR MORE INFORMATION.
5. PLATE DIMENSIONS SHALL BE IN ACCORDANCE WITH THE FOLLOWING:

   A) WHERE CALLED OUT ON THE FRAMING PLANS, THE CONTRACTOR UNDER THE SUPERVISION OF AN INSPECTOR SHALL TAKE FIELD MEASUREMENTS AT DETERIORATED BEAM ENDS.

   B) THE CONTRACTOR SHALL DEVELOP ACCURATE DRAWINGS OF THE EXISTING CONDITIONS BASED ON THESE MEASUREMENTS AND INCLUDE SUGGESTED PLATE DIMENSIONS.

   C) CONTRACTOR SHALL THEN OBTAIN THE NEW PLATES IN ACCORDANCE WITH THE CONTRACT SPECIFICATIONS FOR "REHABILITATION OF EXISTING STRUCTURAL STEEL".
6. STRUCTURAL STEEL (LOW ALLOY) SHALL CONFORM TO AASHTO M270, GRADE 50T2.
7. WELDING DETAILS, PROCEDURES AND TESTING METHODS SHALL CONFORM TO THE AASHTO/AWS D1.5M/D1.5: 2015 - BRIDGE WELDING CODE, UNLESS OTHERWISE NOTED ON THE PLANS.
8. ALL FIELD WELDS SHALL BE VISUALLY INSPECTED BY AN AWS CERTIFIED WELDING INSPECTOR. MULTIPLE PASS WELDS, SHALL HAVE EACH PASS OR LAYER INSPECTED AND ACCEPTED BEFORE PROCEEDING TO THE NEXT PASS OR LAYER, AS DETERMINED BY THE ENGINEER.
9. THE STRUCTURAL STEEL FABRICATORS SHALL BE CERTIFIED UNDER THE AISC QUALITY CONTROL PROGRAM AS "CATEGORY SBr - SIMPLE STEEL BRIDGES".
10. ALL STRUCTURAL STEEL REPAIRS SHALL BE PAID FOR UNDER THE ITEM "REHABILITATION OF EXISTING STRUCTURAL STEEL".
11. IF PERFORATION EXISTS IN WEB, A $\frac{3}{8}$" SEALING PLATE SHALL BE WELDED ON THE OPPOSITE SIDE OF THE REPAIR PLATE. WHERE POSSIBLE, THE SEALING PLATE SHALL EXTEND 2" MINIMUM BEYOND THE FURTHEST EDGE OF THE PERFORATION. THE PERFORATION SHALL BE FILLED WITH SILICONE SEALANT PRIOR TO WELDING SEALING PLATE.
12. THE FRAMING PLAN ON DWG S-21 HAS BEEN PREPARED BASED ON FIELD INSPECTIONS AND OTHER INFORMATION AVAILABLE AT THIS TIME. ACTUAL FIELD CONDITIONS MAY VARY AND MAY REQUIRE MODIFICATIONS TO CONSTRUCTION DETAILS AND WORK QUANTITIES. THE CONTRACTOR SHALL PERFORM ALL WORK IN ACCORDANCE WITH FIELD CONDITIONS OR AS DIRECTED BY THE ENGINEER.
13. THE FRAMING PLAN INDICATES LIMITS OF AREAS TO BE REPAIRED. DETERIORATED AREAS SHOWN ARE APPROXIMATE. THE ENGINEER WILL DETERMINE THE ACTUAL LIMITS OF REPAIR AND MAY ADD NEW REPAIR LOCATIONS IF ADDITIONAL DETERIORATION IS ENCOUNTERED DURING CONSTRUCTION.
14. AREAS OF DETERIORATED STEEL SHALL BE REPAIRED BASED ON THE DETAILS SHOWN IN DWG. S-17, S-18, S-19, S-20 AND S-24. STEEL REPAIR PLATES WILL BE SIZED AND FABRICATED BASED ON FIELD MEASUREMENTS TAKEN BY THE CONTRACTOR AND APPROVED BY THE ENGINEER.

STEEL REPAIR SCHEDULE				ANTICIPATED REPAIR PLATES		
REPAIR LOCATION	SPAN	APPROX. LENGTH OF DETERIORATED AREA (FT.)	APPROX. HEIGHT OF DETERIORATED AREA (IN.)	APPROX. LENGTH OF STEEL PLATE (FT.)	APPROX. HEIGHT OF STEEL PLATE (IN.)	NUMBER OF STEEL PLATES
R1	SPAN 1A	2.167	11	4	20	3
R2	SPAN 1	1.083	16	2.5	22	2
R3	SPAN 2	6.917	11	9	23	4
R4	SPAN 3	1.583	6	3	12	2
R5	SPAN 3	1.583	6	3.5	15	3
R6	SPAN 3	2.000	5	2.5	8	1
R6A	SPAN 4	2.000	6	2.5	9	1
R7	SPAN 4	5.000	4	5.5	7	1
R8	SPAN 6	5.000	4	5.5	7	1
R9	SPAN 6	1.500	3	2.5	9	2
R10	SPAN 10	1.458	8	2.5	14	2
R11	SPAN 13	0.875	5	1.5	8	1
R12	SPAN 13	1.167	3	2.5	9	2
R13	SPAN 13	1.500	2	2	5	1
R14	SPAN 14	5.000	2	5.5	5	1
R15	SPAN 14	0.875	3	1.5	6	1
R16	SPAN 14	4.583	5	6	11	2
R17	SPAN 15	1.167	4	2.5	10	2
R18	SPAN 16	2.000	8	2.5	11	1
R19	SPAN 16	3.583	11	5.5	20	3
R20	SPAN 17	1.000	3	1.5	6	1
R21	SPAN 17	3.000	5	3.5	8	1
R22	SPAN 7	6.000	~~3~~ 36	8	48	1
D1	SPAN 8	2.000	6	1	12	2
D2	SPAN 15	0.750	1	2	12	2
D3	SPAN 16	0.333	3	1	12	1
D4	SPAN 16	0.583	6	1	12	3
D5	SPAN 16	3.000	4	3	12	1
D6	SPAN 15	4.000	2	4	12	1

NOTE: STEEL REPAIR PLATE SIZES ARE APPROXIMATE. ACTUAL SIZE MAY VARY BASED ON FIELD CONDITIONS AFTER THE STEEL IS CLEANED. THE SIZES PROVIDED IN THE TABLE ABOVE ARE FOR ESTIMATION PURPOSES ONLY.

ADDENDUM NO. 2

REV.	DATE	REVISION DESCRIPTION	SHEET NO.
-	-	-	-
-	-	-	-
-	-	-	-
-	-	-	-
-	-	-	-
1	08/30/19	REVISED STEEL REPAIR SCHEDULE TABLE	04.16.A2

THE INFORMATION, INCLUDING ESTIMATED QUANTITIES OF WORK, SHOWN ON THESE SHEETS IS BASED ON LIMITED INVESTIGATIONS BY THE STATE AND IS IN NO WAY WARRANTED TO INDICATE THE CONDITIONS OF ACTUAL QUANTITIES OF WORK WHICH WILL BE REQUIRED.

Plotted Date: 8/29/2019

DESIGNER/DRAFTER: DK
CHECKED BY: JG
NOT TO SCALE

STATE OF CONNECTICUT
DEPARTMENT OF TRANSPORTATION

Filename: ...\SB_MSH_Br00032_135_334_Steel_Repair_Notes_A2.dgn

SIGNATURE/ BLOCK:

GM2 ASSOCIATES, INC.
115 GLASTONBURY BLVD.
GLASTONBURY, CT 06033

PROJECT TITLE:
REHABILITATION OF BRIDGE NO. 00032, I-95 OVER METRO-NORTH RAILROAD AND LOCAL STREETS

TOWN: **STAMFORD**

DRAWING TITLE: **STEEL REPAIR NOTES**

PROJECT NO. **135-334**
DRAWING NO. **S-16**
SHEET NO. **04.16.A2**

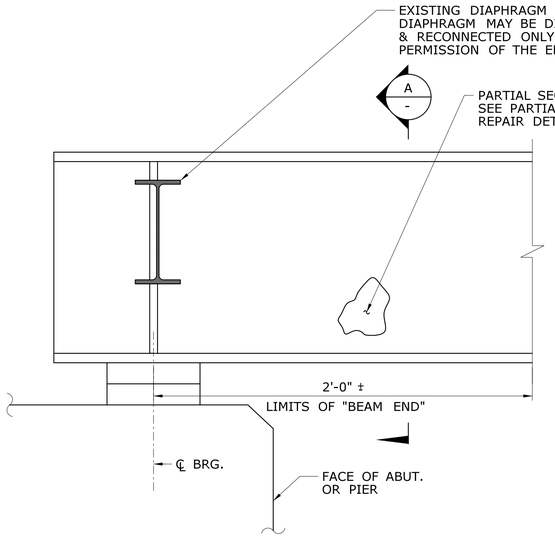

ELEVATION

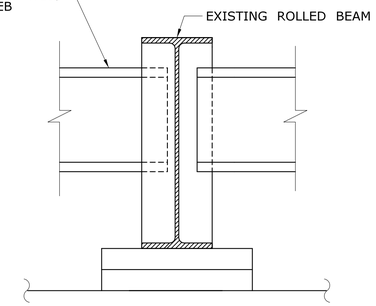

A - SECTION

EXISTING DETERIORATED WEB DETAIL

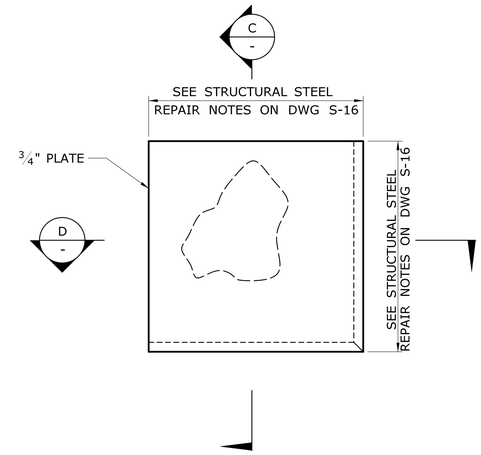

REPAIR PLATE

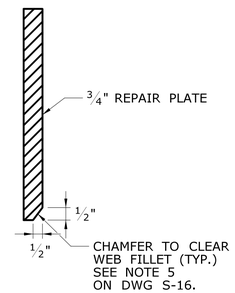

C - SECTION

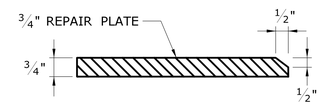

D - SECTION

REPAIR PLATE DETAIL

NOTES:

1. DETERIORATED PORTIONS OF THE EXISTING STEEL COMPONENTS WITHIN THE LIMITS OF PAINTING SHALL BE REPAIRED IN ACCORDANCE WITH THESE DETAILS AND AS ORDERED BY THE ENGINEER. THE DEFINITION OF DETERIORATED IS OBVIOUS PERFORATIONS, AND SECTION LOSS. ANY DETERIORATED PORTIONS OF THE GIRDER AND/OR ATTACHMENTS SHALL BE REPAIRED IN ACCORDANCE WITH THE FOLLOWING CRITERIA AND AS ORDERED BY THE ENGINEER:

   WEB REPAIR

   A) REPAIR AREAS WITH GREATER THAN 10% LOSS OF THICKNESS WITHIN THE LIMITS OF "BEAM END".

   CONNECTION PLATES

   A) REPAIR AREAS WITH GREATER THAN 20% LOSS OF THICKNESS WITHIN THE LIMITS OF "BEAM END".

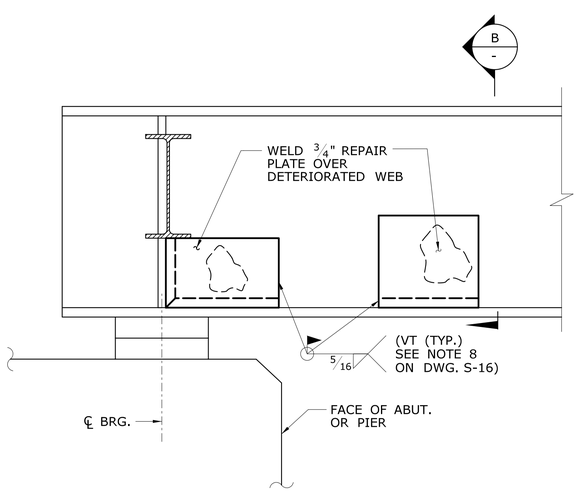

ELEVATION

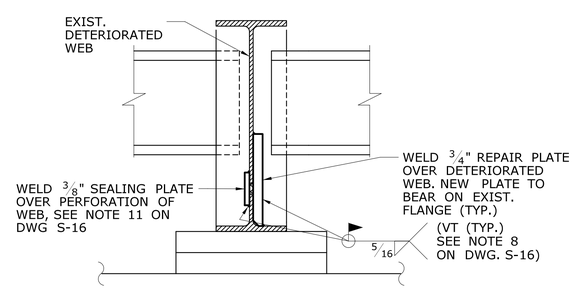

B - SECTION

PARTIAL HEIGHT WEB REPAIR DETAIL

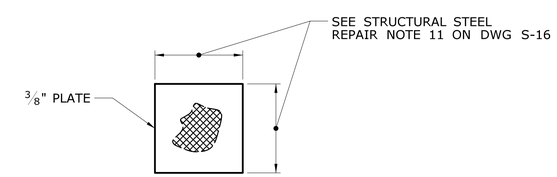

SEALING PLATE

△1 REPAIR LOCATIONS: R1 TO R21
ALL OF THE REPAIR PLATES WILL REQUIRE A CHAMFER LENGTHWISE. ASSUME 50% OF PLATES WILL REQUIRE A VERTICAL CHAMFER. THIS CONDITION SHALL BE FIELD VERIFIED AFTER STEEL SURFACES ARE CLEANED.

ADDENDUM NO. 2

REV.	DATE	REVISION DESCRIPTION	SHEET NO.
-	-	-	-
-	-	-	-
-	-	-	-
-	-	-	-
-	-	-	-
△1	08/30/19	ADDED NOTE FOR REPAIR LOCATIONS	04.17.A2

THE INFORMATION, INCLUDING ESTIMATED QUANTITIES OF WORK, SHOWN ON THESE SHEETS IS BASED ON LIMITED INVESTIGATIONS BY THE STATE AND IS IN NO WAY WARRANTED TO INDICATE THE CONDITIONS OF ACTUAL QUANTITIES OF WORK WHICH WILL BE REQUIRED.

Plotted Date: 8/29/2019

DESIGNER/DRAFTER: DK
CHECKED BY: JG
NOT TO SCALE

STATE OF CONNECTICUT
DEPARTMENT OF TRANSPORTATION

Filename: ...\SB_MSH_Br00032_135_334_Steel_Repair_Details - 1 of 4_A2.dgn

SIGNATURE/BLOCK:

GM2 ASSOCIATES, INC.
115 GLASTONBURY BLVD.
GLASTONBURY, CT 06033

PROJECT TITLE:
REHABILITATION OF BRIDGE NO. 00032, I-95 OVER METRO-NORTH RAILROAD AND LOCAL STREETS

TOWN: **STAMFORD**

DRAWING TITLE: **STEEL REPAIR DETAILS 1 OF 4**

PROJECT NO. 135-334
DRAWING NO. S-17
SHEET NO. 04.17.A2

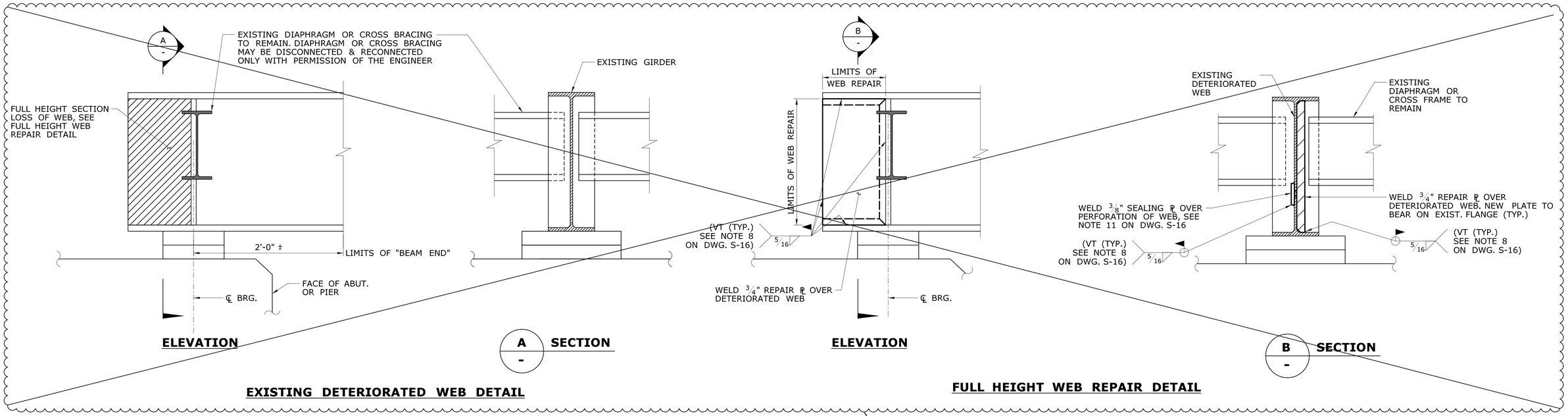

EXISTING DETERIORATED WEB DETAIL

FULL HEIGHT WEB REPAIR DETAIL

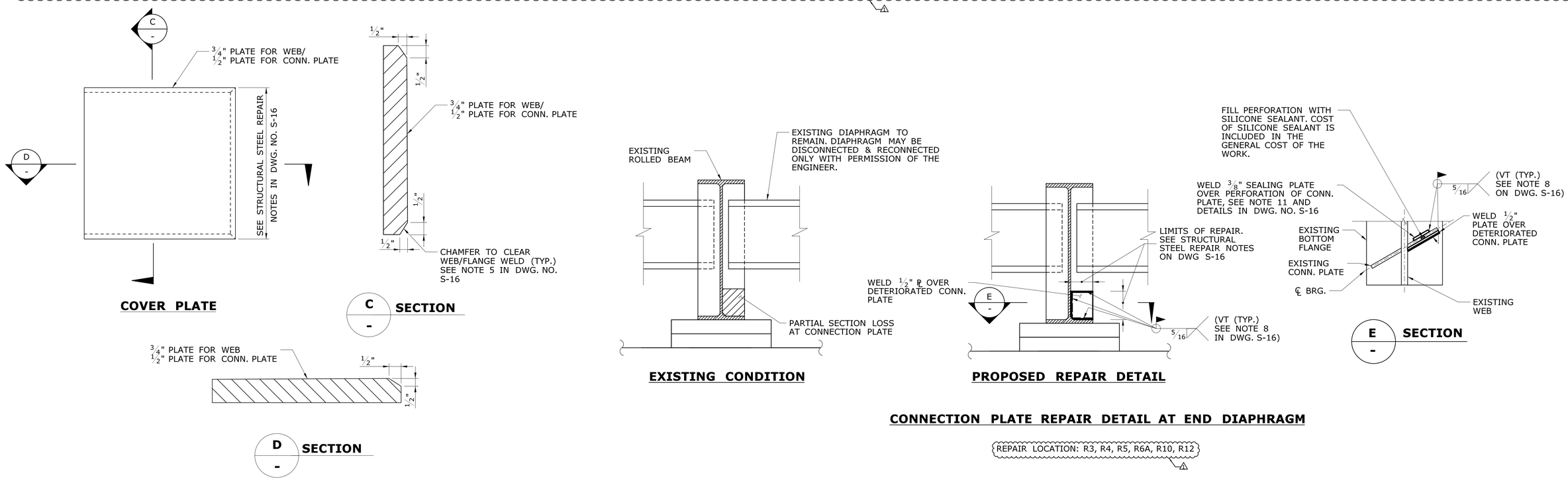

COVER PLATE DETAIL

CONNECTION PLATE REPAIR DETAIL AT END DIAPHRAGM

REPAIR LOCATION: R3, R4, R5, R6A, R10, R12

ADDENDUM NO. 2

REV.	DATE	REVISION DESCRIPTION	SHEET NO.
-	-	-	-
-	-	-	-
-	-	-	-
-	-	-	-
-	-	-	-
1	08/30/19	DELETED REPAIR DETAIL AND ADDED NOTES.	04.18.A2

THE INFORMATION, INCLUDING ESTIMATED QUANTITIES OF WORK, SHOWN ON THESE SHEETS IS BASED ON LIMITED INVESTIGATIONS BY THE STATE AND IS IN NO WAY WARRANTED TO INDICATE THE CONDITIONS OF ACTUAL QUANTITIES OF WORK WHICH WILL BE REQUIRED.

Plotted Date: 8/29/2019

DESIGNER/DRAFTER: **DK**

CHECKED BY: **JG**

NOT TO SCALE

STATE OF CONNECTICUT
DEPARTMENT OF TRANSPORTATION

Filename: ...\SB_MSH_Br00032_135_334_Steel_Repair_Details - 2 of 4_A2.dgn

SIGNATURE/ BLOCK:

GM2 ASSOCIATES, INC.
115 GLASTONBURY BLVD.
GLASTONBURY, CT 06033

PROJECT TITLE:
REHABILITATION OF BRIDGE NO. 00032, I-95 OVER METRO-NORTH RAILROAD AND LOCAL STREETS

TOWN: **STAMFORD**

DRAWING TITLE: **STEEL REPAIR DETAILS 2 OF 4**

PROJECT NO. **135-334**

DRAWING NO. **S-18**

SHEET NO. **04.18.A2**

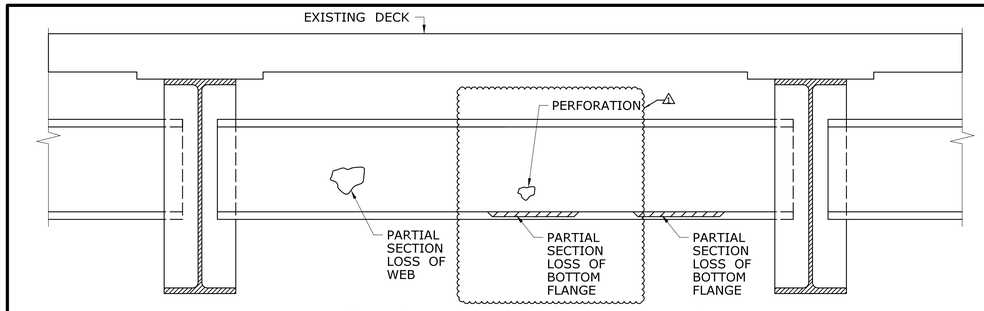

EXISTING DETERIORATED DIAPHRAGM

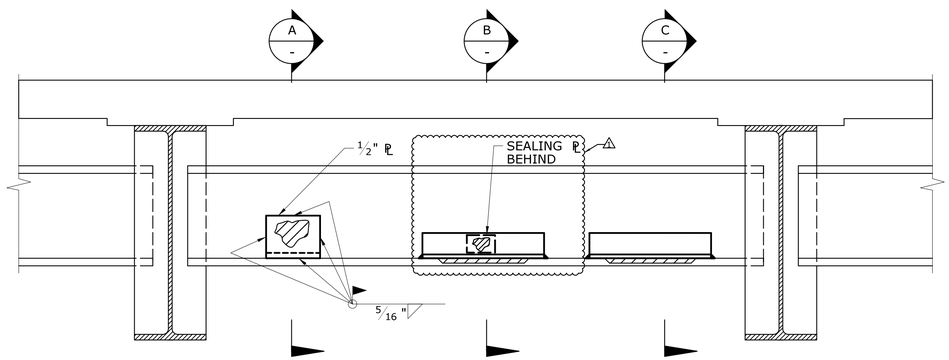

BOTTOM FLANGE & WEB REPAIR DETAIL AT DIAPHRAGM

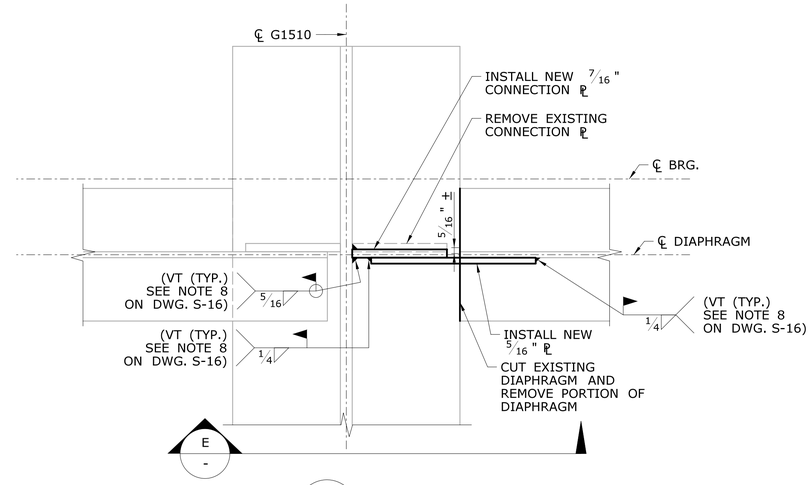

D S-15 DETAIL
SCALE: 3" = 1'-0"

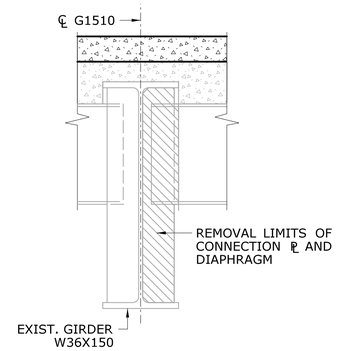

EXISTING

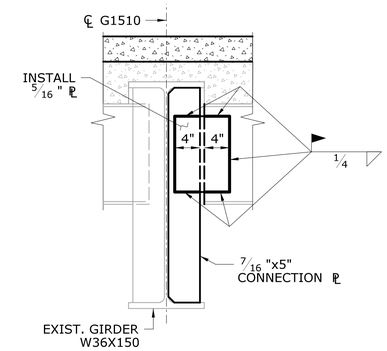

PROPOSED

E - ELEVATION
SCALE: 1" = 1'-0"

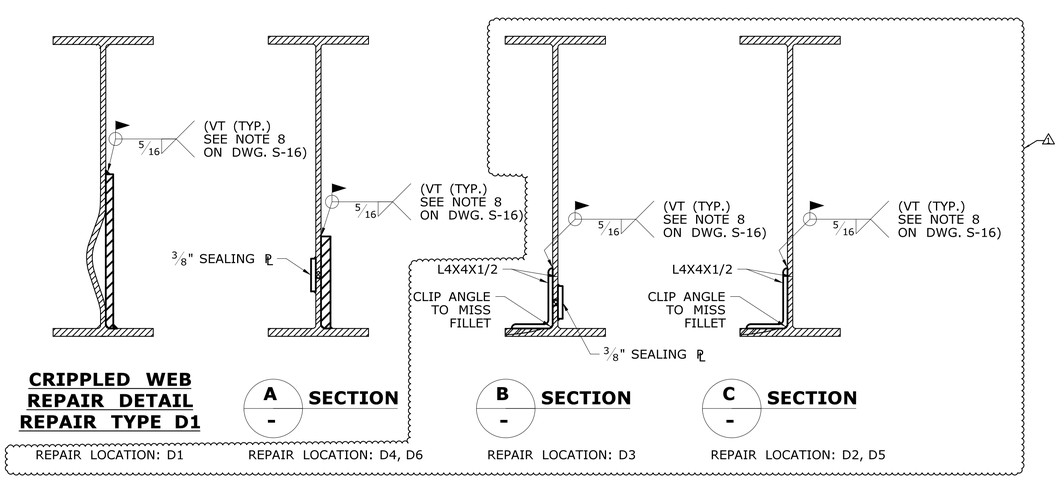

CRIPPLED WEB REPAIR DETAIL REPAIR TYPE D1

A - SECTION
REPAIR LOCATION: D1

B - SECTION
REPAIR LOCATION: D4, D6

C - SECTION
REPAIR LOCATION: D3

REPAIR LOCATION: D2, D5

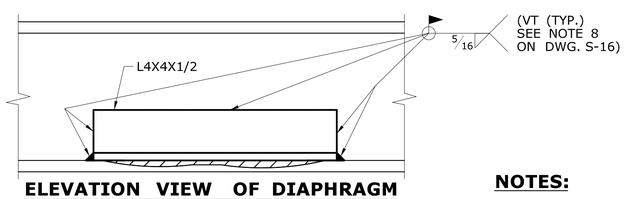

ELEVATION VIEW OF DIAPHRAGM BOTTOM FLANGE REPAIR

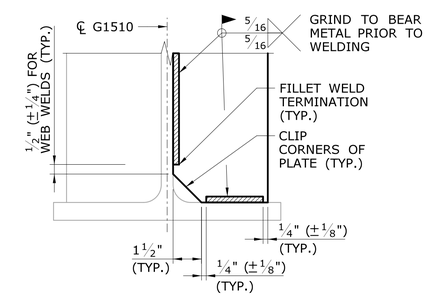

CLIP AND WELD DETAIL FOR CONNECTION PLATE

NOTES:

1. FOR STRUCTURAL STEEL REPAIR NOTES SEE DWG. S-16

DIAPHRAGM & CONNECTION PLATE REPAIR NOTES:

1. SEE DWG. NO. S-16 FOR STRUCTURAL STEEL NOTES.
2. THE WORK FOR REMOVAL OF EXISTING CONNECTION PLATE AND FLAME CUTTING AND REMOVING PORTION OF EXISTING DIAPHRAGM SHALL BE PAID UNDER THE ITEM "STRUCTURAL STEEL".
3. THE WORK FOR FURNISHING AND INSTALLING NEW 5/16" AND 7/16" PLATE SHALL BE PAID FOR UNDER ITEM "STRUCTURAL STEEL". △1
4. THE COST FOR PAINTING ASSOCIATED TO PERFORM THE WORK DESCRIBED ABOVE SHALL BE INCLUDED UNDER THE ITEM "LOCALIZED PAINT REMOVAL AND FIELD PAINTING OF EXISTING STEEL".

ADDENDUM NO. 2

REV.	DATE	REVISION DESCRIPTION	SHEET NO.
-	-	-	-
-	-	-	-
-	-	-	-
-	-	-	-
-	-	-	-
△1	08/30/19	REVISED DIAPHRAGM REPAIR DETAILS	04.19.A2

THE INFORMATION, INCLUDING ESTIMATED QUANTITIES OF WORK, SHOWN ON THESE SHEETS IS BASED ON LIMITED INVESTIGATIONS BY THE STATE AND IS IN NO WAY WARRANTED TO INDICATE THE CONDITIONS OF ACTUAL QUANTITIES OF WORK WHICH WILL BE REQUIRED.

Plotted Date: 8/29/2019

DESIGNER/DRAFTER: DK
CHECKED BY: JG
NOT TO SCALE

STATE OF CONNECTICUT
DEPARTMENT OF TRANSPORTATION

Filename: ...\SB_MSH_Br00032_135_334_Steel_Repair_Details - 3 of 4_A2.dgn

SIGNATURE/BLOCK:
GM2 ASSOCIATES, INC.
115 GLASTONBURY BLVD.
GLASTONBURY, CT 06033

PROJECT TITLE:
REHABILITATION OF BRIDGE NO. 00032, I-95 OVER METRO-NORTH RAILROAD AND LOCAL STREETS

TOWN: **STAMFORD**

DRAWING TITLE: **STEEL REPAIR DETAILS 3 OF 4**

PROJECT NO. 135-334
DRAWING NO. S-19
SHEET NO. 04.19.A2

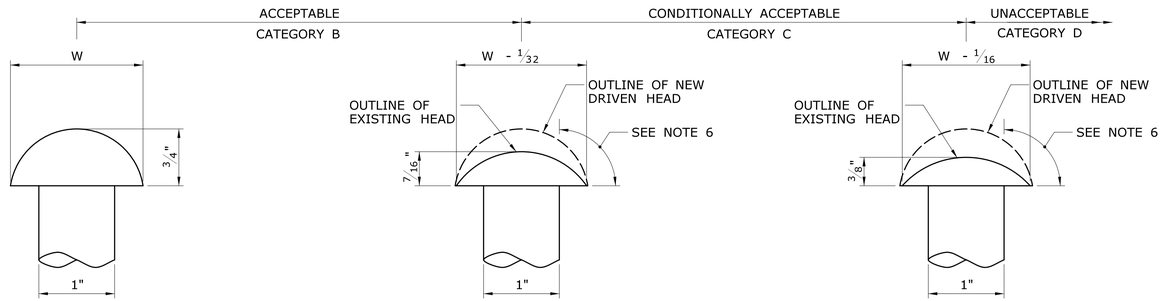

CONDITION A - FULL SIZE RIVET HEAD

CONDITION B - MINIMUM UNCONDITIONALLY ACCEPTABLE

CONDITION C - MINIMUM CONDITIONALLY ACCEPTABLE

RIVET REPLACEMENT CRITERIA FOR DETERIORATION IN HEAD CROWN

SCALE: 1' = 1'-0"

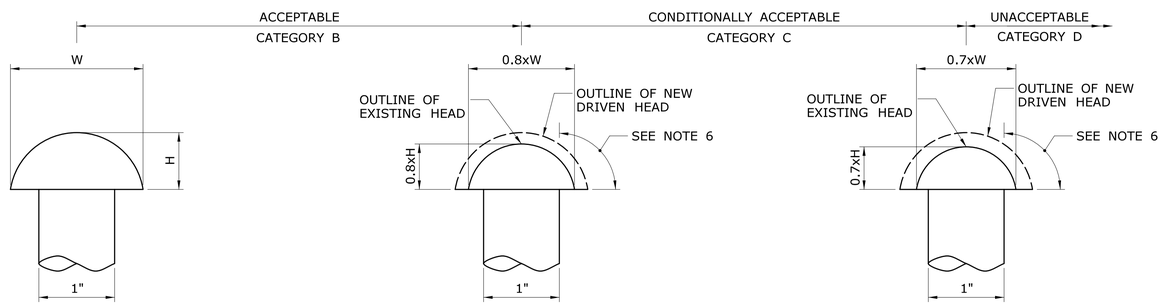

CONDITION A - FULL SIZE RIVET HEAD

CONDITION B - MINIMUM UNCONDITIONALLY ACCEPTABLE

CONDITION C - MINIMUM CONDITIONALLY ACCEPTABLE

RIVET REPLACEMENT CRITERIA FOR DETERIORATION IN OVERALL HEAD

SCALE: 1' = 1'-0"

RIVET REPLACEMENT NOTES

1. REMOVAL OF RIVETS FOR THE PURPOSE OF MAKING VARIOUS STRUCTURAL STEEL REPAIRS INDICATED ON THE PLANS OR AS ORDERED BY THE ENGINEER ARE NOT INCLUDED IN THE CRITERIA.
2. DETERIORATED RIVETS NOT COVERED UNDER NOTE 1 ABOVE WILL BE INSPECTED BY THE ENGINEER, WHO WILL ORDER THAT SPECIFIC RIVETS BE REPLACED WITH HIGH STRENGTH BOLTS IN ACCORDANCE WITH FOLLOWING GUIDELINES.
3. RIVETS (CONDITION B) WITH DIMENSIONS OF BOTH HEADS MEETING OR SURPASSING EACH OF THE MINIMUM DIMENSIONS SHOWN FOR CONDITION B MAY BE LEFT IN PLACE SUBJECT TO CONDITIONS DESCRIBED IN NOTE 6.
4. RIVETS (CONDITION C) NOT MEETING THE REQUIREMENTS OF CONDITION B, BUT HAVING DIMENSIONS WHICH MEET OR SURPASS AT BOTH HEADS EACH OF THE MINIMUM REQUIREMENTS SHOWN FOR CONDITION C MAY BE LEFT IN PLACE SUBJECT TO THE FOLLOWING CONDITIONS:

   A) THERE IS NO PRYING ACTION FROM APPLIED STRESS WHICH TENDS TO SEPARATE THE CONNECTED PARTS.

   B) RIVETS HEADS DO NOT HAVE ADDITIONAL LOSSES DESCRIBED IN NOTE 6.

   C) RIVETS MAY BE LEFT IN PLACE TO THE EXTENT THAT THEIR NUMBER DOES NOT EXCEED 15% OF CONNECTION RIVETS IN ANY ONE CONNECTION OR 40% OF STITCH RIVETS.

   D) WHERE THE ABOVE PERCENTAGES ARE EXCEEDED THE NUMBER OF RIVETS OVER THE PRESCRIBED PERCENTAGE SHALL BE REPLACED WITH HIGH STRENGTH BOLTS.

   E) WHEN SELECTING RIVETS FOR REPLACEMENT TO MEET THE ABOVE PERCENTAGE REQUIREMENTS, THE WORST RIVETS IN ANY GROUP OR CONNECTION SHALL BE SELECTED FOR REPLACEMENT.
5. RIVETS (CONDITION D) NOT MEETING THE REQUIREMENTS OF CONDITION C AT EITHER HEAD SHALL BE REPLACED (CONDITION D NOT SHOWN).
6. REPLACEMENT WILL ALSO BE REQUIRED FOR ANY RIVET EXHIBITING ADDITIONAL LOSS IN THE FORM OF PITS OR GOUGES OF THE EDGE OF EITHER HEAD PROJECTING BEYOND THE SHANK WHERE SUCH LOSS REDUCES THE SECTION BELOW THE LIMITS SHOWN FOR CONDITION B.
7. RIVETS REPLACED IN ACCORDANCE WITH NOTES 2 THROUGH 6 WILL BE PAID FOR UNDER THE ITEM "REPLACE REMOVED OR MISSING RIVETS AND BOLTS WITH HIGH STRENGTH BOLTS".
8. DIMENSIONS SHOWN ON THESE DETAILS FOR CONDITION B AND C ARE MINIMUM REQUIREMENTS FOR BOTH DRIVEN AND MANUFACTURED HEADS. THE MINIMUM HEIGHT OF A RIVET HEAD IS MEASURED TO THE CENTER OF THE RIVET. THE MINIMUM DIAMETER APPLIES TO THAT DIRECTION IN WHICH IT IS THE SMALLEST.
9. THE SELECTION AND INSTALLATION OF BOLTS SHALL BE IN ACCORDANCE WITH THE SPECIFICATIONS. FOR EACH BOLT IN THESE ITEMS, A MINIMUM OF TWO WASHERS SHALL BE USED, ONE UNDER EACH HEAD AND NUT. THE CONTRACTOR SHALL TAKE ALL NECESSARY FIELD MEASUREMENTS TO DETERMINE PROPER GRIP LENGTHS.
10. RIVETS SHALL BE REMOVED ALTERNATIVELY, WITH A MAXIMUM OF TWO RIVETS BEING REMOVED AT ONE TIME, SUBJECT TO THE APPROVAL OF THE ENGINEER.
11. THE NEW BOLTS TO BE INSTALLED SHALL BE 1" DIA. ASTM F3125, TYPE 1 HIGH STRENGTH BOLTS WITH NUT AND WASHER.

FLOOR BEAMS STEEL REPAIR NOTES

A. FOR ADDITIONAL STRUCTURAL STEEL REPAIR NOTES SEE DWG. S-16

B. THE CONTRACTOR SHALL HAVE A VARIETY OF BEVELED WASHERS ON HAND TO ACCOMMODATE THE CROSS-SLOPE OF THE DETERIORATED FLANGE.

C. PLATE THICKNESS SHALL BE A MINIMUM OF 1/2". THE DIMENSIONS OF THE PLATE SHALL BE DETERMINED IN THE FIELD BASED ON THE EXTENT OF DETERIORATION ENCOUNTERED.

D. THE FLANGE REPAIR DETAIL SHOWN IN THIS SHEET IS FOR FLOOR BEAMS IN SPAN 7 ONLY. ACTUAL DETERIORATION LOCATIONS AND AREAS ARE NOT KNOWN AT THIS TIME AND SHALL BE FIELD VERIFIED BY THE ENGINEER. THIS DETAILS SHALL ACT AS A TOOLBOX FOR PERFORMING THE REPAIRS.

E. THE COST FOR PERFORMING THIS WORK SHALL BE INCLUDED UNDER THE ITEM "REHABILITATION OF EXISTING STRUCTURAL STEEL".

RIVET REPLACEMENT - SPAN 7

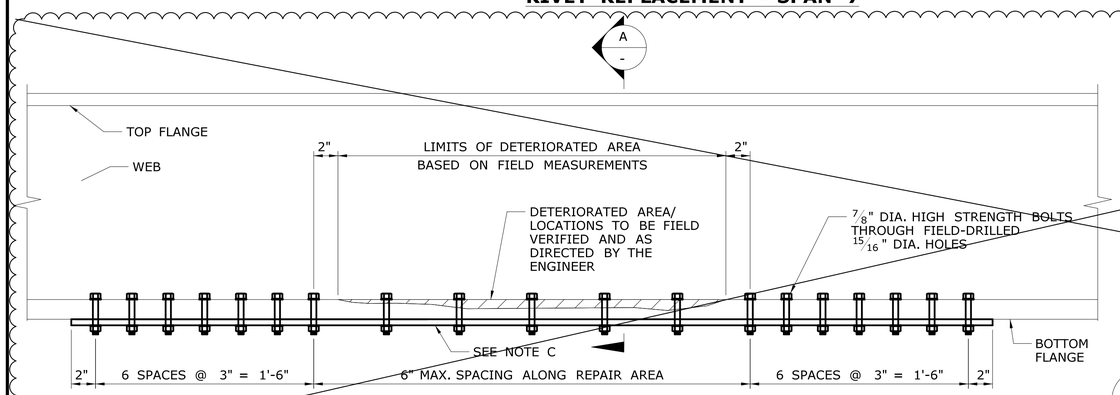

TYPICAL BOTTOM FLANGE REPAIR - FOR FLOOR BEAMS IN SPAN 7 (EXCEPT FOR FB719)

NOT TO SCALE

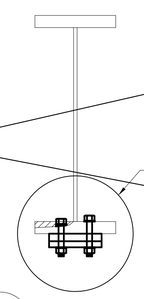

A / - SECTION

NOT TO SCALE

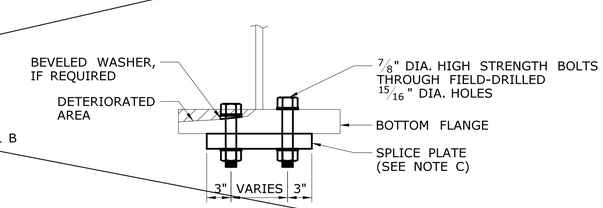

DETAIL B

NOT TO SCALE

ADDENDUM NO. 2

REV.	DATE	REVISION DESCRIPTION	SHEET NO.
-	-	-	-
-	-	-	-
-	-	-	-
-	-	-	-
-	-	-	-
1	08/30/19	DELETED REPAIR DETAIL	04.20.A2

THE INFORMATION, INCLUDING ESTIMATED QUANTITIES OF WORK, SHOWN ON THESE SHEETS IS BASED ON LIMITED INVESTIGATIONS BY THE STATE AND IS IN NO WAY WARRANTED TO INDICATE THE CONDITIONS OF ACTUAL QUANTITIES OF WORK WHICH WILL BE REQUIRED.

Plotted Date: 8/29/2019

DESIGNER/DRAFTER: DK
CHECKED BY: JG
SCALE AS NOTED

STATE OF CONNECTICUT
DEPARTMENT OF TRANSPORTATION

Filename: ...\SB_MSH_Br00032_135_334_Steel_Repair_Details - 4 of 4_A2.dgn

SIGNATURE/BLOCK:

GM2 ASSOCIATES, INC.
115 GLASTONBURY BLVD.
GLASTONBURY, CT 06033

PROJECT TITLE:
REHABILITATION OF BRIDGE NO. 00032, I-95 OVER METRO-NORTH RAILROAD AND LOCAL STREETS

TOWN: **STAMFORD**

DRAWING TITLE: **STEEL REPAIR DETAILS 4 OF 4**

PROJECT NO. **135-334**
DRAWING NO. **S-20**
SHEET NO. **04.20.A2**

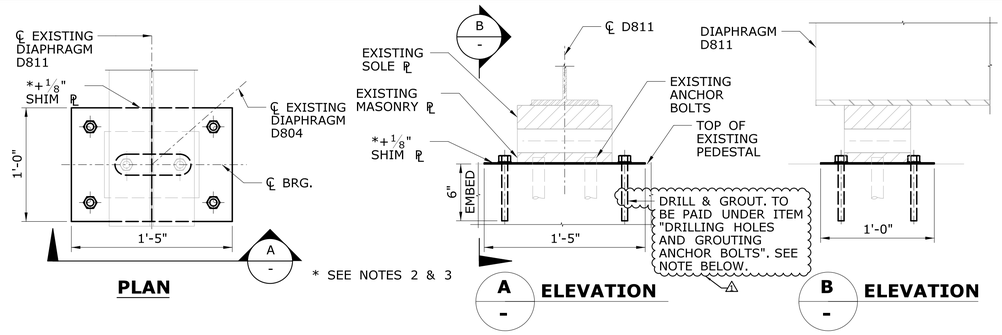

DIAPHRAGM D811 EXPANSION BEARING

SCALE: 1½" = 1'-0"

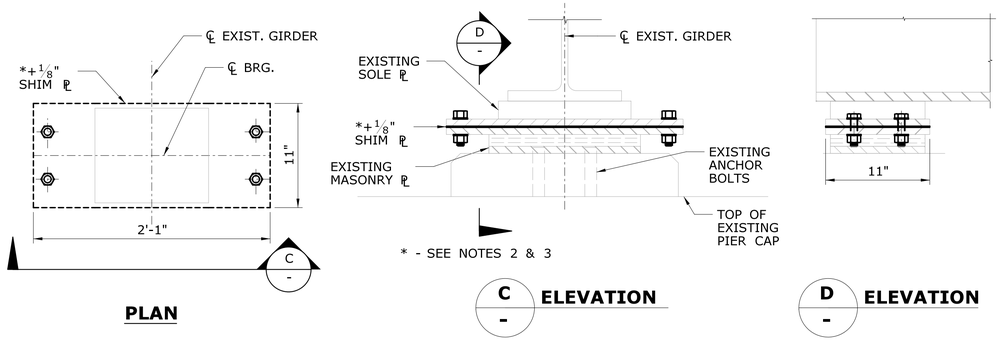

EXPANSION BEARING

SCALE: 1½" = 1'-0"

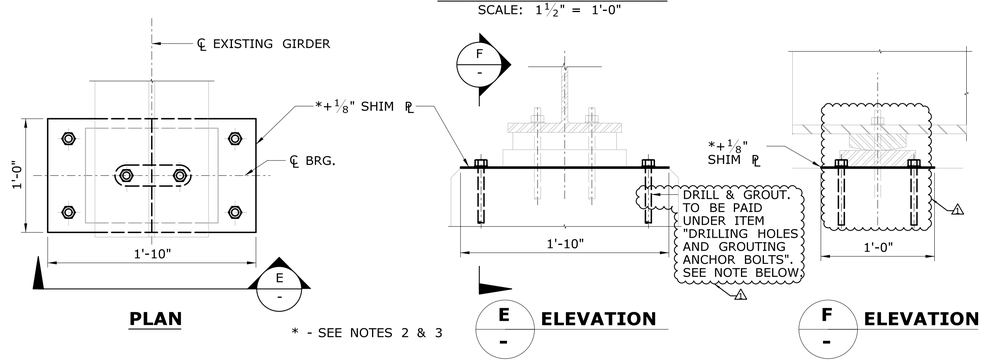

FIXED BEARING

SCALE: 1½" = 1'-0"

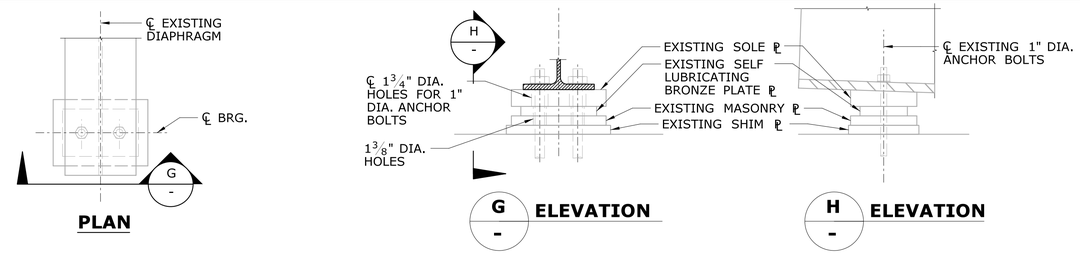

EXPANSION BEARING DETAIL AT D604 & D514

SCALE: 1½" = 1'-0"

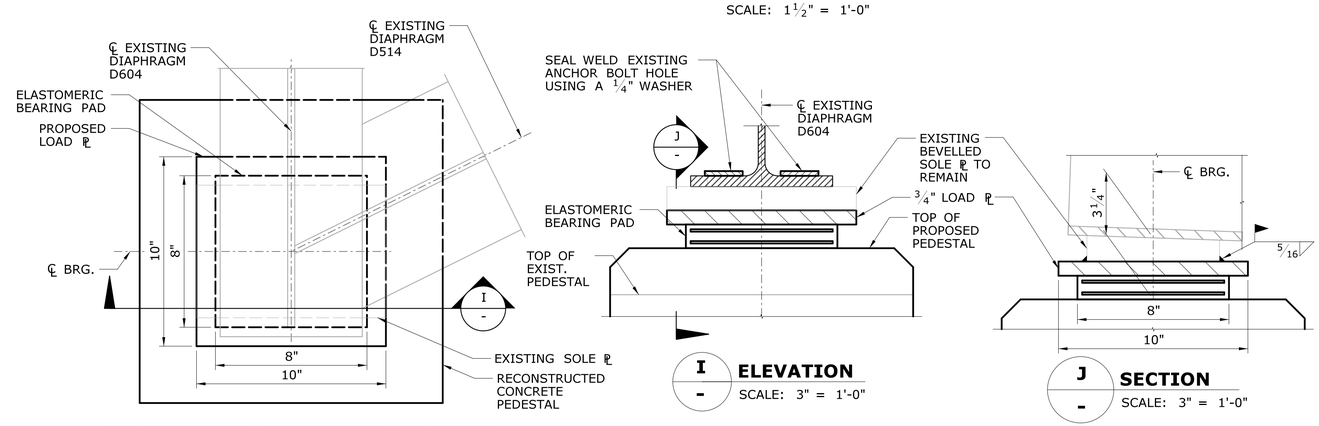

ELASTOMERIC EXPANSION BEARING DIAPHRAGM G604

SCALE: 3" = 1'-0"

BEARING REPAIR SCHEDULE

GIRDER	BEARING TYPE	REPAIR TYPE	SHIM PLATE THICKNESS
G412	FIX.	SHIMS	* + ⅛"
G414	FIX.	SHIMS	* + ⅛"
G1013	EXP.	SHIMS	* + ⅛"
G1211	FIX.	SHIMS	* + ⅛"
G1311	FIX.	SHIMS	* + ⅛"
G1410	FIX.	SHIMS	* + ⅛"
G1508	EXP.	SHIMS	* + ⅛"
G1509	EXP.	SHIMS	* + ⅛"
G1510	EXP.	SHIMS	* + ⅛"
G1510	FIX.	SHIMS	* + ⅛"
D811	EXP.	SHIMS	* + ⅛"
D514	EXP.	CLEAN AND LUBRICATE	
D604	EXP.	BEARING REPLACEMENT	

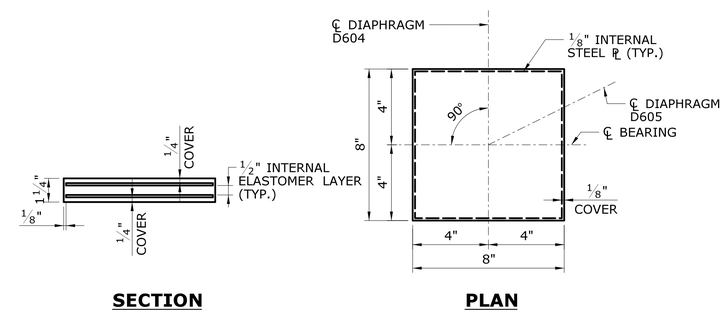

ELASTOMERIC BEARING PAD

SCALE: 3" = 1'-0"

BEARING REPAIR NOTES:

1. SEE DWG. NO. S-16 FOR STRUCTURAL STEEL NOTES.
2. DISPLACEMENT BETWEEN BEARING AND PEDESTAL SHALL BE MONITORED AND FIELD MEASURED PRIOR TO FABRICATION.
3. GIRDERS SHALL BE JACKED AND SHIMMED AN ADDITIONAL OF ⅛" THAN THE MAXIMUM MEASURED DISPLACEMENT.
4. ALL DIMENSIONS SHOWN ON THIS SHEET SHALL BE FIELD VERIFIED PRIOR TO FABRICATION.
5. FIXED BEARING NUTS FOR BEARING ANCHORAGE SHALL BE LOOSENED PRIOR TO JACKING OPERATION AND TO BE TIGHTENED AFTER COMPLETION OF WORK.
6. CARE SHALL BE TAKEN NOT TO DAMAGE REINFORCING STEEL DURING DIRLLING OPERATIONS.
7. COST FOR FURNISHING AND INSTALLING STEEL SHIMS SHALL BE INCLUDED UNDER THE ITEM "STRUCTURAL STEEL".
8. ANCHOR BOLTS SHALL BE ¾" DIA. ASTM F1554.
9. REMOVE EXISTING SHIMS/PLATES UNDERNEATH EXISTING MASONRY ℙ FOR DIAPHRAGM D514.
10. ANTICIPATED SEQUENCE FOR BEARING REPAIRS:
    PERFORM STEEL REPAIRS
    INSTALL JACKING STIFFENERS
    JACK GIRDERS/DIAPHRAGMS
    INSTALL SHIMS/LUBRICATE BEARING/REPLACE BEARING
    FINISH BEARING REPAIRS
    REMOVE JACKING ASSEMBLY, LEAVE JACKING STIFFENERS IN PLACE TO COMPLETE BEARING REPAIRS

NOTE: FURNISHING AND INSTALLING ANCHOR BOLTS AND NUTS INTO EXISTING CONCRETE PEDESTAL TO BE PAID UNDER ITEM "DRILLING HOLES AND GROUTING ANCHOR BOLTS".

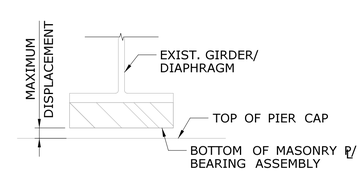

MEASURED DISPLACEMENT

ELASTOMETRIC BEARING NOTES

1. ELASTOMERIC BEARING PADS SHALL BE NEOPRENE, HARDNESS (SHORE "A" DUROMETER) OF 60, GRADE 3.
2. THE COST OF THE BEARING SHALL BE PAID UNDER "STEEL-LAMINATED ELASTOMERIC BEARINGS".
3. DESIGN LOADS: (DESIGN METHOD = DESIGN METHOD A)
   UNFACTORED DESIGN LOADS:
   MAXIMUM DEAD LOAD 1.2 KIPS
   MAXIMUM LIVE LOAD (+ IMPACT) 40.00 KIPS
4. ALL STEEL PLATES SHALL CONFORM TO AASHTO M 270 GRADE 50W (ASTM A709 GRADE 50W). STEEL PLATES SHALL BE PAID FOR UNDER ITEM ~~"STRUCTURAL STEEL"~~ "STEEL-LAMINATED ELASTOMERIC BEARINGS".
5. THE TOP OF THE BEARING SHOULD BE VULCANIZED UNDER HEAT AND PRESSURE TO A STEEL TOP PLATE TO FACILITATE INSTALLATION.
6. BEARINGS SHOULD BE INSTALLED AT TEMPERATURES BETWEEN 40° F & 85° F. INSTALLATION TEMPERATURES OUTSIDE THIS RANGE WILL REQUIRE ADJUSTMENT.

ADDENDUM NO. 2

REV.	DATE	REVISION DESCRIPTION	SHEET NO.
-	-	-	-
-	-	-	-
-	-	-	-
-	-	-	-
-	-	-	-
1	08/30/19	REVISED CALLOUTS AND NOTES FOR PAY ITEMS	04.22.A2

THE INFORMATION, INCLUDING ESTIMATED QUANTITIES OF WORK, SHOWN ON THESE SHEETS IS BASED ON LIMITED INVESTIGATIONS BY THE STATE AND IS IN NO WAY WARRANTED TO INDICATE THE CONDITIONS OF ACTUAL QUANTITIES OF WORK WHICH WILL BE REQUIRED.

Plotted Date: 8/29/2019

DESIGNER/DRAFTER: DK
CHECKED BY: JG
SCALE AS NOTED

STATE OF CONNECTICUT
DEPARTMENT OF TRANSPORTATION

Filename: ...\SB_MSH_Br00032_135_334_Bearing_Repairs_A2.dgn

SIGNATURE/ BLOCK:

GM2 ASSOCIATES, INC.
115 GLASTONBURY BLVD.
GLASTONBURY, CT 06033

PROJECT TITLE:
REHABILITATION OF BRIDGE NO. 00032, I-95 OVER METRO-NORTH RAILROAD AND LOCAL STREETS

TOWN: **STAMFORD**

DRAWING TITLE: **BEARING REPAIR DETAILS**

PROJECT NO. 135-334
DRAWING NO. S-22
SHEET NO. 04.22.A2

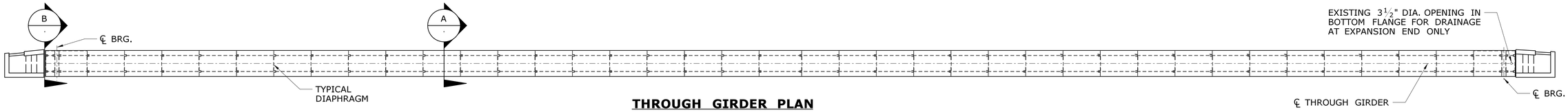

THROUGH GIRDER PLAN

GIRDER G750 SHOWN (G751 SIMILAR)

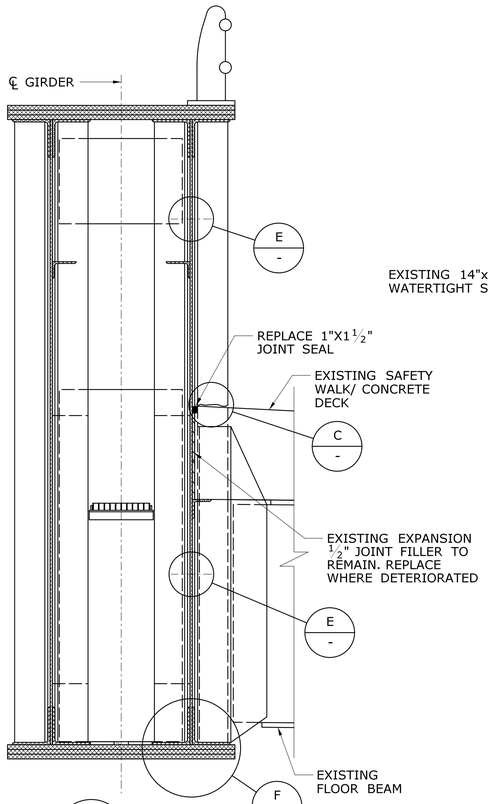

A SECTION

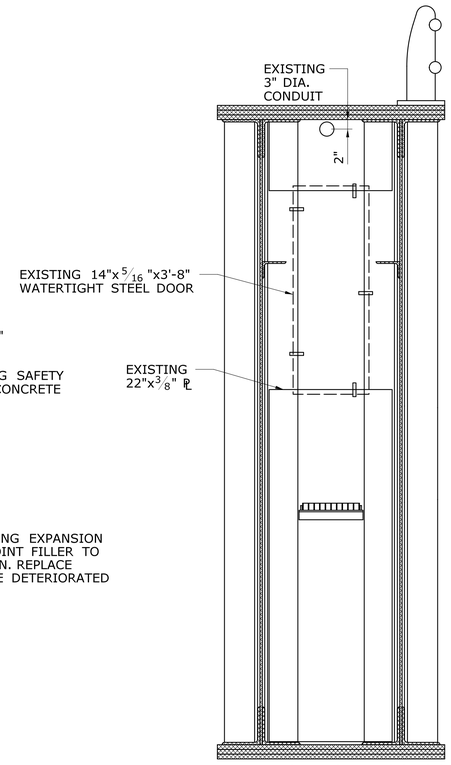

END ELEVATION OF ACCESS DOOR

B SECTION

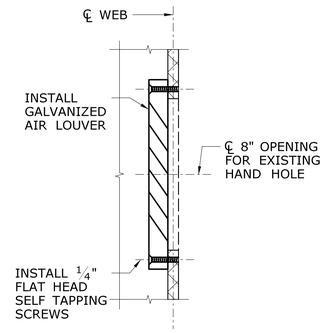

E DETAIL

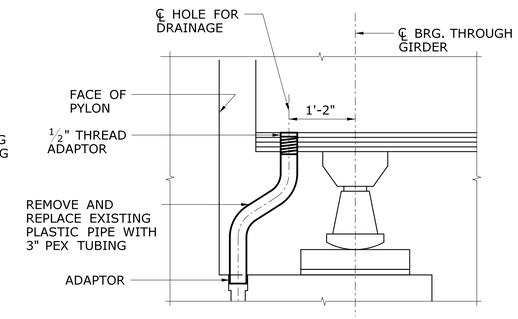

DRAINAGE DETAIL AT THROUGH GIRDER BOTTOM FLANGE

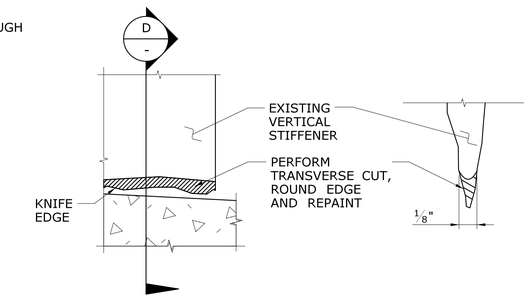

C STIFFENER REPAIR DETAIL

D SECTION

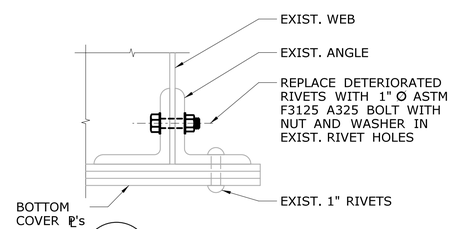

F1 DETAIL AT FLANGE RIVET REPLACEMENT

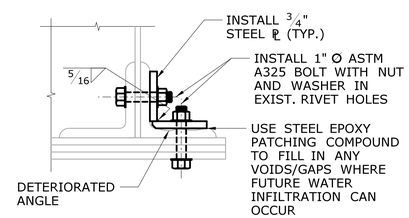

F2 DETAIL AT FLANGE REPAIR

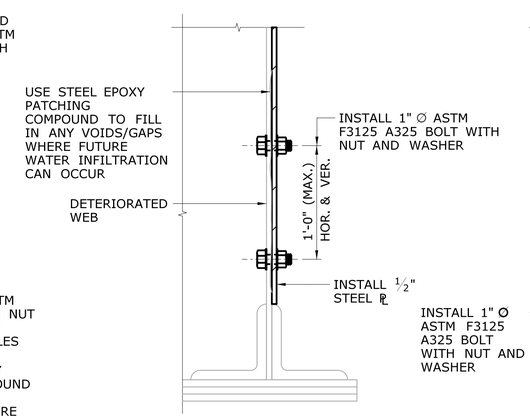

WEB REPAIR DETAIL

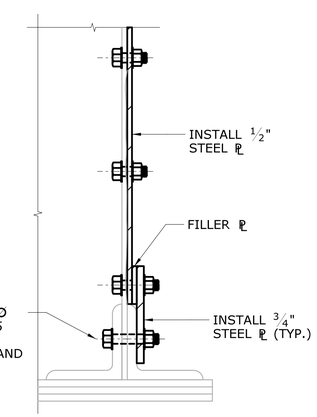

WEB & FLANGE REPAIR DETAIL

REPAIR LOCATION R22 ⚠1

NOTES:

1. EXISTING DRAINAGE INSIDE THE THROUGH GIRDERS SHALL BE REESTABLISHED. THE COST FOR REPLACING THE PLASTIC PIPE WITH PEX TUBING AND ADAPTORS SHALL BE PAID FOR UNDER THE ITEM "REPAIR WEEP DRAINS".
2. REPLACE EXISTING DAMAGED JOINT SEAL BETWEEN THROUGH GIRDER AND DECK. COST TO BE INCLUDED UNDER THE ITEM "REPLACE JOINT SEAL".
3. WHEN THERE IS A MISSING HANDHOLE/AIR LOUVER (APPROXIMATELY 25 EACH), REPLACE WITH GALVANIZED AIR LOUVER. THE COST FOR INSTALLATION OF AIR LOUVERS TO BE INCLUDED UNDER THE ITEM "STRUCTURAL STEEL".
4. FOR STRUCTURAL STEEL REPAIR NOTES SEE DWG S-16.
5. FOR RIVET REPLACEMENT DETAILS AND NOTES SEE DWG S-20.
6. THE COST FOR FURNISHING AND INSTALLING STEEL EPOXY PATCHING COMPOUND TO BE INCLUDED UNDER ITEM "REHABILITATION OF STRUCTURAL STEEL".

STIFFENER REPAIR NOTES:

1. CUT SHALL BE PERFORMED ONLY ON THE STIFFENER AT THE DISCRETION OF THE ENGINEER. CUT SHALL BE AS CLOSE TO THE CONCRETE WALKWAY AS POSSIBLE. THE COST TO PERFORM THIS WORK SHALL NOT BE MEASURED FOR PAYMENT SEPARATELY AND SHALL BE INCLUDED UNDER THE COST OF ITEM "ABRASIVE BLAST CLEANING FIELD PAINTING OF BEAM ENDS (SITE NO.1)". ⚠1
2. AFTER CUTTING AND ROUNDING OF KNIFE EDGE, REPAINT ROUNDED EDGE TO FACILITATE BETTER ADHESION OF PAINT SYSTEM. SEE SPECIAL PROVISION "ABRASIVE BLAST CLEANING AND FIELD PAINTING OF BEAM ENDS (SITE NO. 1)".

ADDENDUM NO. 2

REV.	DATE	REVISION DESCRIPTION	SHEET NO.
-	-	-	-
-	-	-	-
-	-	-	-
-	-	-	-
-	-	-	-
⚠1	08/30/19	ADDED REPAIR LOCATION	04.24.A2

THE INFORMATION, INCLUDING ESTIMATED QUANTITIES OF WORK, SHOWN ON THESE SHEETS IS BASED ON LIMITED INVESTIGATIONS BY THE STATE AND IS IN NO WAY WARRANTED TO INDICATE THE CONDITIONS OF ACTUAL QUANTITIES OF WORK WHICH WILL BE REQUIRED.

Plotted Date: 8/29/2019

DESIGNER/DRAFTER: DK
CHECKED BY: JG
NOT TO SCALE

STATE OF CONNECTICUT
DEPARTMENT OF TRANSPORTATION

Filename: ...\SB_MSH_Br00032_135_334_Through_Girder_Repairs_A2.dgn

SIGNATURE/ BLOCK:

GM2 ASSOCIATES, INC.
115 GLASTONBURY BLVD.
GLASTONBURY, CT 06033

PROJECT TITLE:
REHABILITATION OF BRIDGE NO. 00032, I-95 OVER METRO-NORTH RAILROAD AND LOCAL STREETS

TOWN: **STAMFORD**

DRAWING TITLE: **THROUGH GIRDER REPAIRS**

PROJECT NO. 135-334
DRAWING NO. S-24
SHEET NO. 04.24.A2

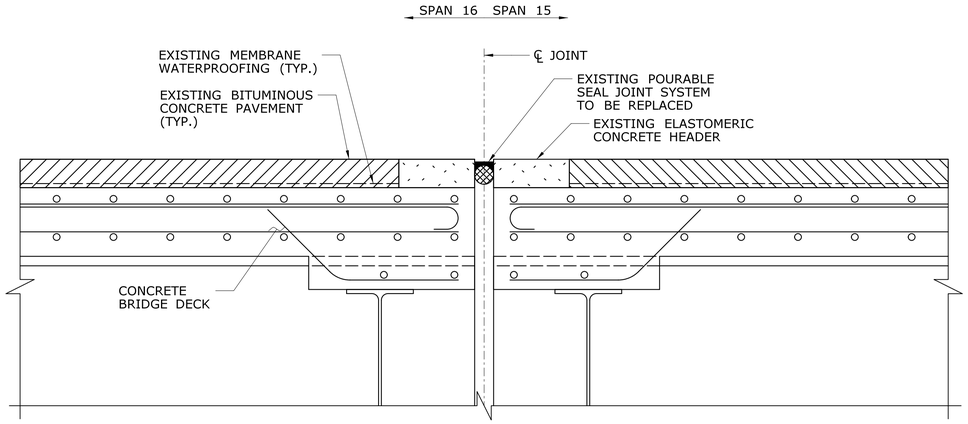

EXISTING FIXED-FIXED JOINT AT PIER 15

SCALE: 1½" = 1'-0"

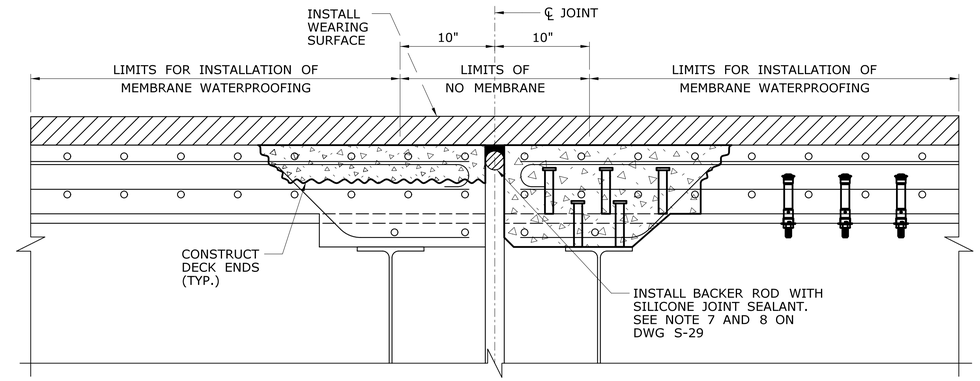

STEP 3

SCALE: 1½" = 1'-0"

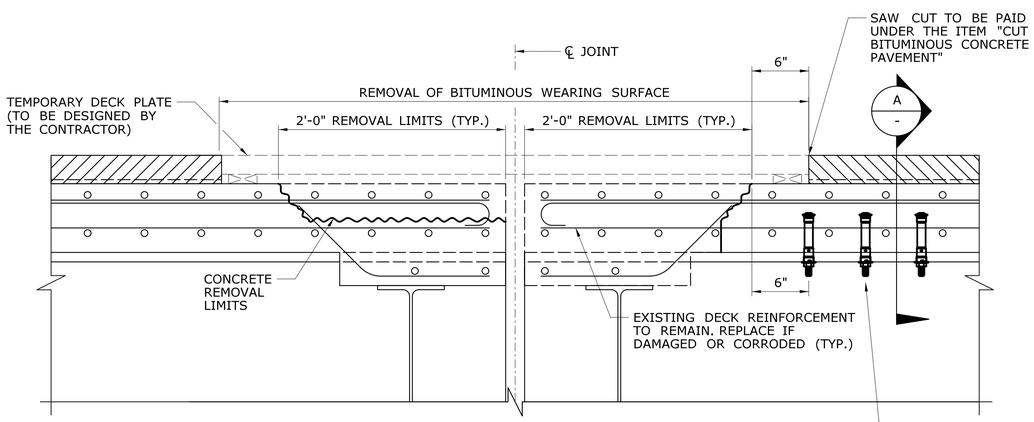

STEP 1

SCALE: 1½" = 1'-0"

INSTALL DECK ANCHORS @ 12" SPACING, SEE DECK CONNECTION NOTES 1. COST TO BE INCLUDED UNDER ITEM ~~"RECONSTRUCT CONCRETE DECK ENDS"~~ "DRILLING HOLES AND GROUTING ANCHOR BOLTS" △1

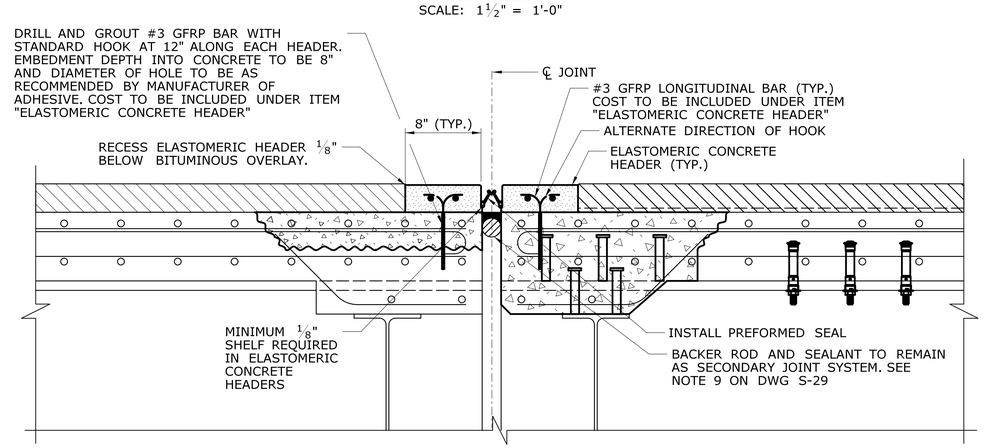

FINAL CONDITION

SCALE: 1½" = 1'-0"

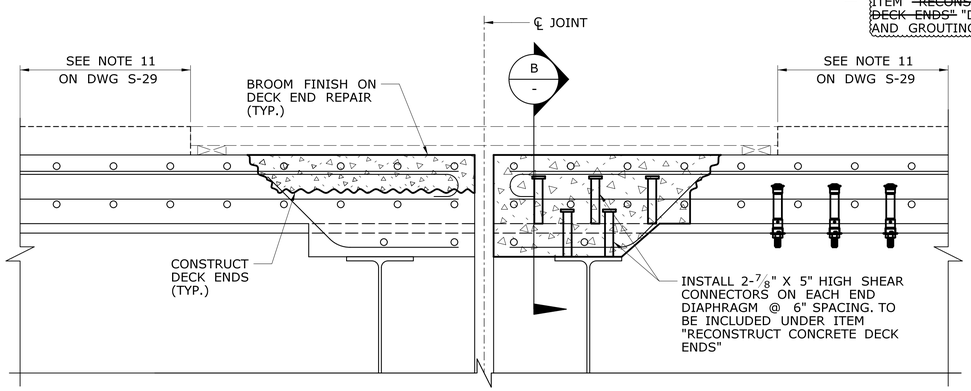

STEP 2

SCALE: 1½" = 1'-0"

JOINT REPLACEMENT NOTES:

1. FOR JOINT REPLACEMENT NOTES, SEE DWG S-29.

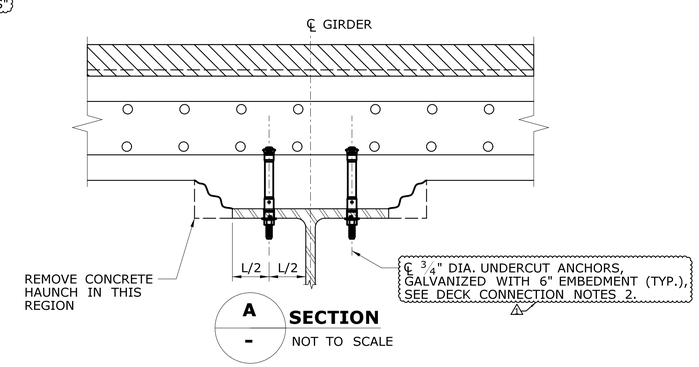

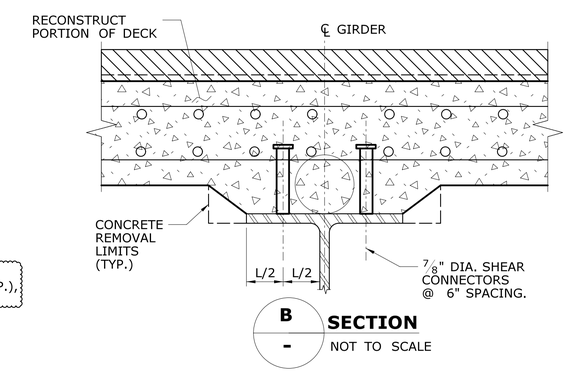

DECK CONNECTION NOTES

1. LIMITS/LENGTH OF REQUIRED CONNECTION REPAIR TO BE DETERMINED IN THE FIELD.
2. CARE SHALL BE TAKEN TO AVOID EXISTING REINFORCING STEEL.

ADDENDUM NO. 2

REV.	DATE	REVISION DESCRIPTION	SHEET NO.
-	-	-	-
-	-	-	-
-	-	-	-
-	-	-	-
-	-	-	-
1	08/30/19	REVISED CALLOUTS FOR PAY ITEM AND MATERIAL	04.36.A2

THE INFORMATION, INCLUDING ESTIMATED QUANTITIES OF WORK, SHOWN ON THESE SHEETS IS BASED ON LIMITED INVESTIGATIONS BY THE STATE AND IS IN NO WAY WARRANTED TO INDICATE THE CONDITIONS OF ACTUAL QUANTITIES OF WORK WHICH WILL BE REQUIRED.

Plotted Date: 8/29/2019

DESIGNER/DRAFTER: DK
CHECKED BY: JG
SCALE AS NOTED

STATE OF CONNECTICUT
DEPARTMENT OF TRANSPORTATION

Filename: ...\SB_MSH_Br00032_135_334_Deck_Connection_A2.dgn

SIGNATURE/BLOCK:

GM2 ASSOCIATES, INC.
115 GLASTONBURY BLVD.
GLASTONBURY, CT 06033

PROJECT TITLE:
REHABILITATION OF BRIDGE NO. 00032, I-95 OVER METRO-NORTH RAILROAD AND LOCAL STREETS

TOWN: **STAMFORD**

DRAWING TITLE: **DECK CONNECTION REPAIR DETAILS**

PROJECT NO. 135-334
DRAWING NO. S-36
SHEET NO. 04.36.A2

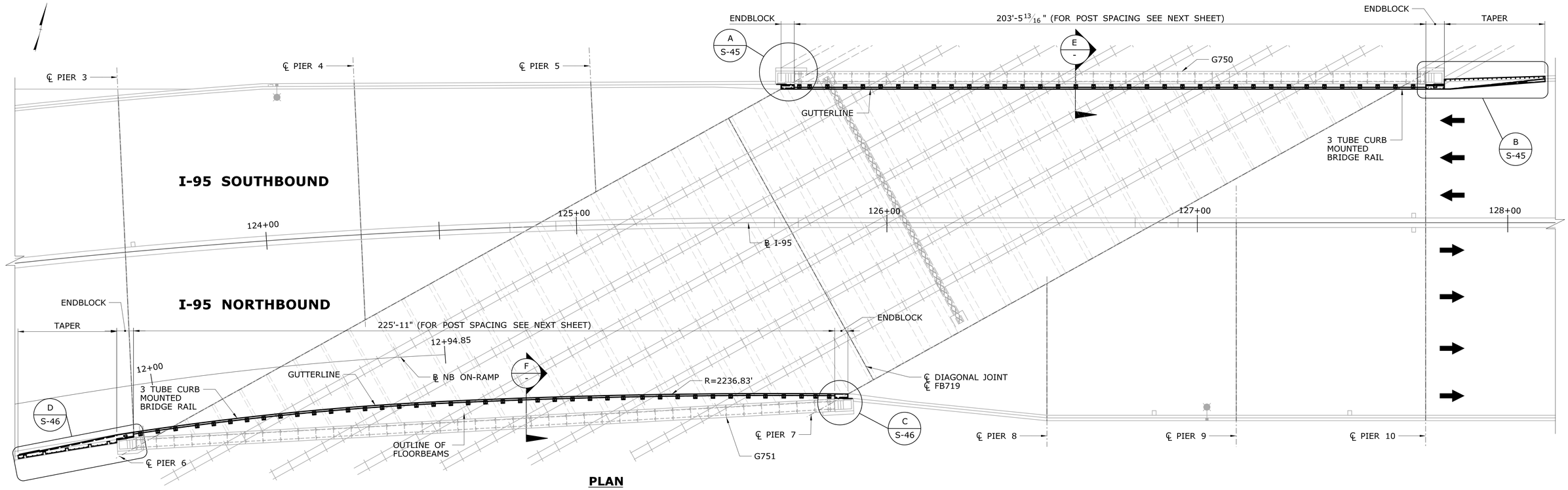

PLAN

SCALE: 1/16" = 1'-0"

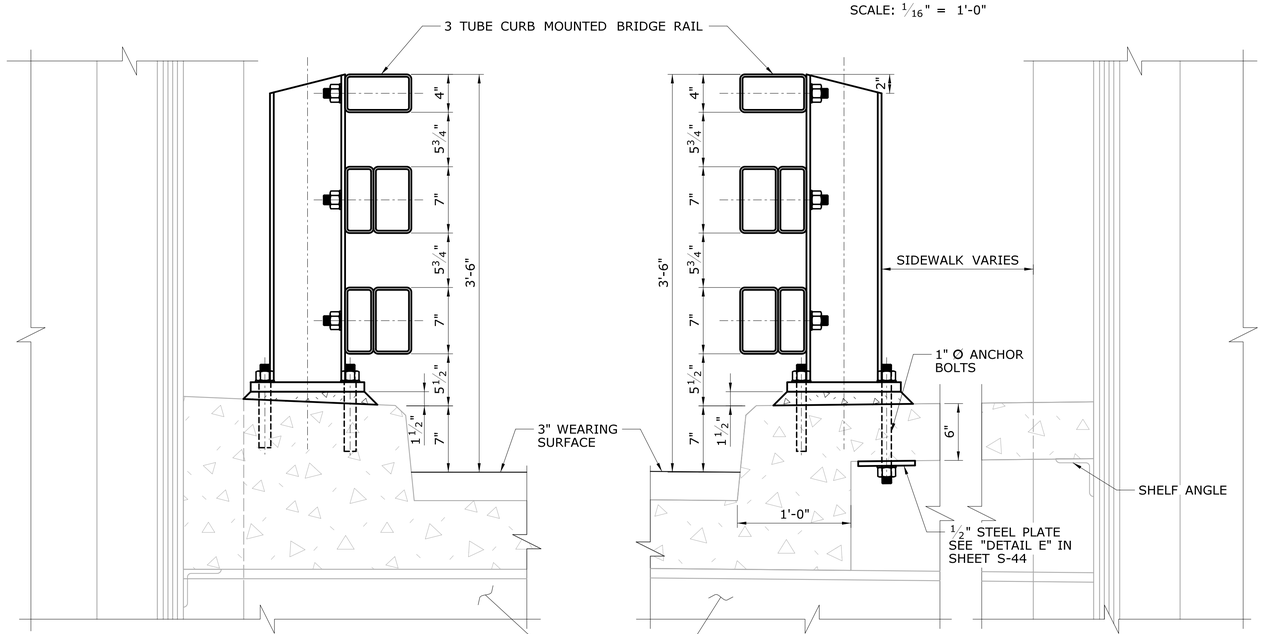

E / - SECTION

SCALE: 1 1/2" = 1'-0"

F / - SECTION

SCALE: 1 1/2" = 1'-0"

NOTES:

1. CONCRETE FOR END BLOCKS SHALL BE PAID FOR UNDER THE ITEM "BARRIERWALL CONCRETE".
2. STEEL PLATES, BENT PLATES, ANGLES, BOLTS AND STUDS FOR PLATES ON END BLOCKS AND TRANSITION PLATES SHALL BE PAID FOR UNDER THE ITEM "STRUCTURAL STEEL".
3. METAL BRIDGE RAILING SHALL BE PAID FOR UNDER ITEM "3 TUBE CURB MOUNTED BRIDGE RAIL". THE ANCHOR BOLTS FOR RAIL POSTS SHALL BE INCLUDED UNDER THIS ITEM. 1
4. REPAIRS OF METAL BRIDGE RAILING ON THE PARAPET ALONG THE ON-RAMP SHALL BE PAID FOR UNDER ITEM "REPAIR METAL BRIDGE RAIL". FOR DETAILS SEE DWG. S-50.
5. DRILL AND GROUT ANCHORS INTO EXISTING DECK/CONCRETE CURB FOR RAIL POSTS, END BLOCK PLATES AND TRANSITION PLATES TO BE PAID UNDER THE ITEM ~~"DRILLING AND GROUTING DOWELS"~~ "DRILLING AND GROUTING ANCHOR BOLTS".
6. DRILL AND GROUT REINFORCING BARS INTO EXISTING CONCRETE CURB FOR END BLOCKS TO BE PAID UNDER ITEM "DRILLING AND GROUTING DOWELS".
7. FURNISHING AND INSTALLING ANCHOR BOLTS/THREADED RODS AND NUTS BETWEEN STEEL PLATES AND EXISTING CONCRETE PARAPET/CURB/DECK TO BE PAID UNDER ITEM "DRILLING HOLES AND GROUTING ANCHOR BOLTS".

SEQUENCE OF INSTALLATION FOR RAILING AND TRANSITION:

1. INSTALL STEEL PLATES ON THE LEADING END TRANSITION PORTION INTO THE ENDBLOCK.
2. INSTALL PORTION OF BRIDGE POSTS AND RAILING THAT CAN BE INSTALLED IN ONE SHIFT STARTING FROM LEADING END TOWARDS TRAILING END.
3. AFTER COMPLETION OF BRIDGE RAILING, INSTALL STEEL PLATES FOR TRAILING END END BLOCK.
4. POUR CONCRETE INSIDE THE END BLOCK FOR COMPLETING INSTALLATION OF BRIDGE RAILING.

ADDENDUM NO. 2

REV.	DATE	REVISION DESCRIPTION	SHEET NO.
-	-	-	-
-	-	-	-
-	-	-	-
-	-	-	-
-	-	-	-
1	08/30/19	REVISED NOTES	04.43.A2

THE INFORMATION, INCLUDING ESTIMATED QUANTITIES OF WORK, SHOWN ON THESE SHEETS IS BASED ON LIMITED INVESTIGATIONS BY THE STATE AND IS IN NO WAY WARRANTED TO INDICATE THE CONDITIONS OF ACTUAL QUANTITIES OF WORK WHICH WILL BE REQUIRED.

Plotted Date: 8/29/2019

DESIGNER/DRAFTER: DK

CHECKED BY: JG

SCALE AS NOTED

STATE OF CONNECTICUT
DEPARTMENT OF TRANSPORTATION

Filename: ...\SB_MSH_Br00032_135_334_Bridge_Rail_Sheet 1 of 4_A2.dgn

SIGNATURE/ BLOCK:

STATE OF CONNECTICUT DEPARTMENT OF TRANSPORTATION PROFESSIONAL ENGINEER

GM2 ASSOCIATES, INC.
115 GLASTONBURY BLVD.
GLASTONBURY, CT 06033

PROJECT TITLE:
REHABILITATION OF BRIDGE NO. 00032, I-95 OVER METRO-NORTH RAILROAD AND LOCAL STREETS

TOWN: **STAMFORD**

DRAWING TITLE: **BRIDGE RAILING 1 OF 4**

PROJECT NO. **135-334**

DRAWING NO. **S-43**

SHEET NO. **04.43.A2**

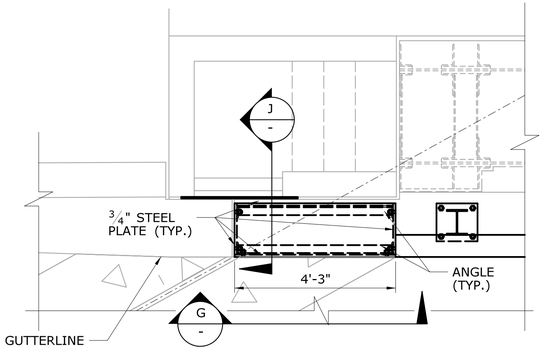

A DETAIL
S-43 SCALE: 1/2" = 1'-0"

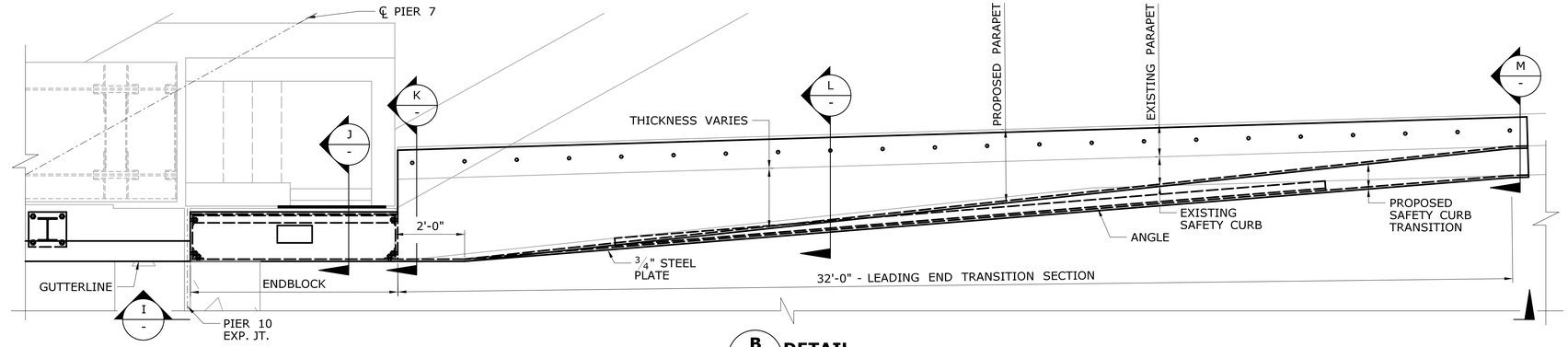

B DETAIL
S-43 SCALE: 1/2" = 1'-0"

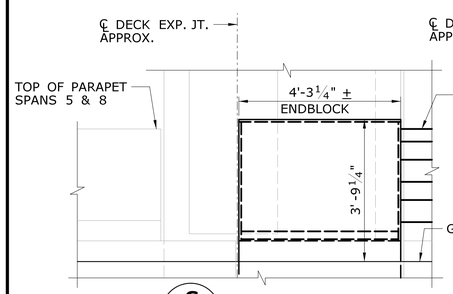

G ELEVATION
- SCALE: 1/2" = 1'-0"

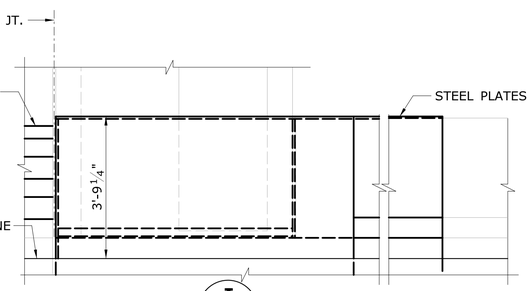

I ELEVATION
- SCALE: 1/2" = 1'-0"

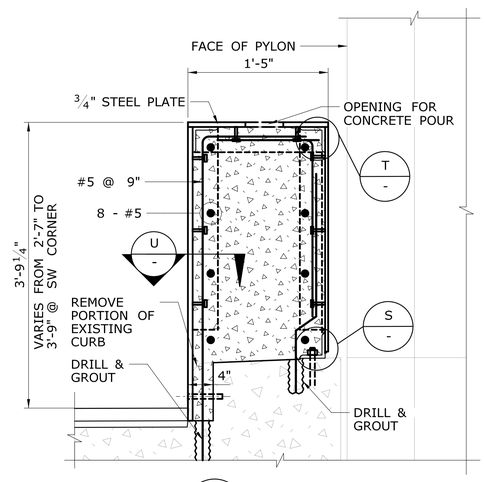

J SECTION
- SCALE: 1" = 1'-0"

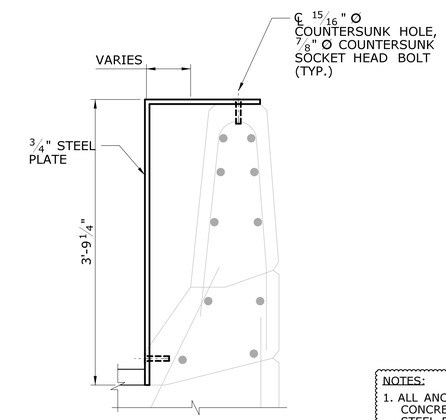

K SECTION
- SCALE: 1" = 1'-0"

NOTES:
1. ALL ANCHOR BOLTS/THREADED FROM STEEL PLATES TO CONCRETE DECK/CURB/PARAPET AND BOLTS CONNECTING STEEL PLATES ARE TO BE SPACED @ 12" O.C. FOR STAGGERED BOLTS THE SPACING SHALL BE 12" O.C. (6" STAGGERED)
2. FOR MATERIAL REQUIREMENTS OF BOLTS/THREADED RODS SEE SPECIAL PROVISIONS.

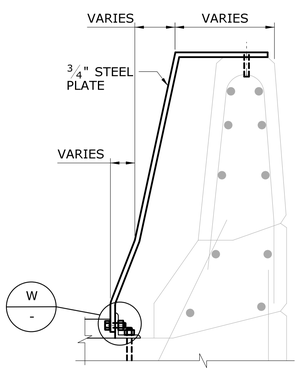

L SECTION
- SCALE: 1" = 1'-0"

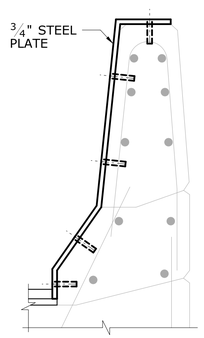

M SECTION
- SCALE: 1" = 1'-0"

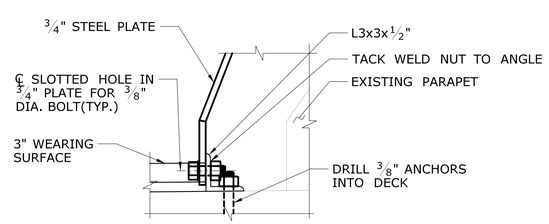

W DETAIL
- NOT TO SCALE

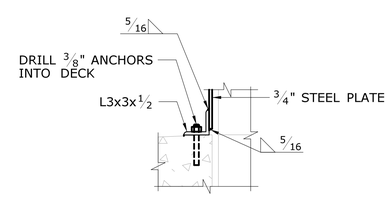

S DETAIL
- NOT TO SCALE

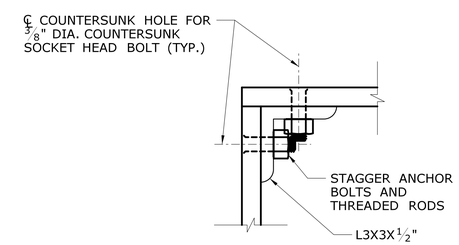

T U DETAIL
- NOT TO SCALE

ADDENDUM NO. 2

REV.	DATE	REVISION DESCRIPTION	SHEET NO.
-	-	-	-
-	-	-	-
-	-	-	-
-	-	-	-
-	-	-	-
1	08/30/19	ADDED NOTE	04.45.A2

THE INFORMATION, INCLUDING ESTIMATED QUANTITIES OF WORK, SHOWN ON THESE SHEETS IS BASED ON LIMITED INVESTIGATIONS BY THE STATE AND IS IN NO WAY WARRANTED TO INDICATE THE CONDITIONS OF ACTUAL QUANTITIES OF WORK WHICH WILL BE REQUIRED.

Plotted Date: 8/29/2019

DESIGNER/DRAFTER: DK
CHECKED BY: JG
SCALE AS NOTED

STATE OF CONNECTICUT
DEPARTMENT OF TRANSPORTATION

Filename: ...\SB_MSH_Br00032_135_334_Bridge_Rail_Sheet 3 of 4_A2.dgn

SIGNATURE/BLOCK:

GM2 ASSOCIATES, INC.
115 GLASTONBURY BLVD.
GLASTONBURY, CT 06033

PROJECT TITLE:
REHABILITATION OF BRIDGE NO. 00032, I-95 OVER METRO-NORTH RAILROAD AND LOCAL STREETS

TOWN: **STAMFORD**

DRAWING TITLE: **BRIDGE RAILING 3 OF 4**

PROJECT NO. 135-334
DRAWING NO. S-45
SHEET NO. 04.45.A2

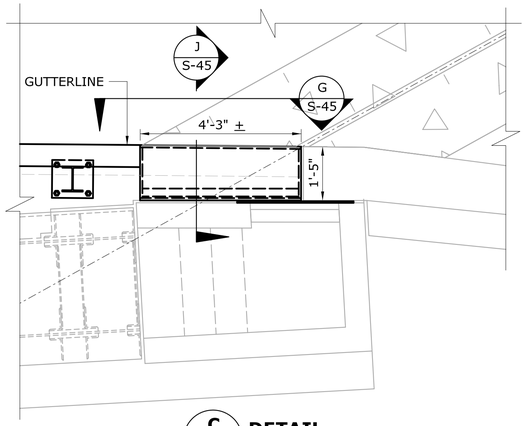

C / S-43 DETAIL
SCALE: ½" = 1'-0"

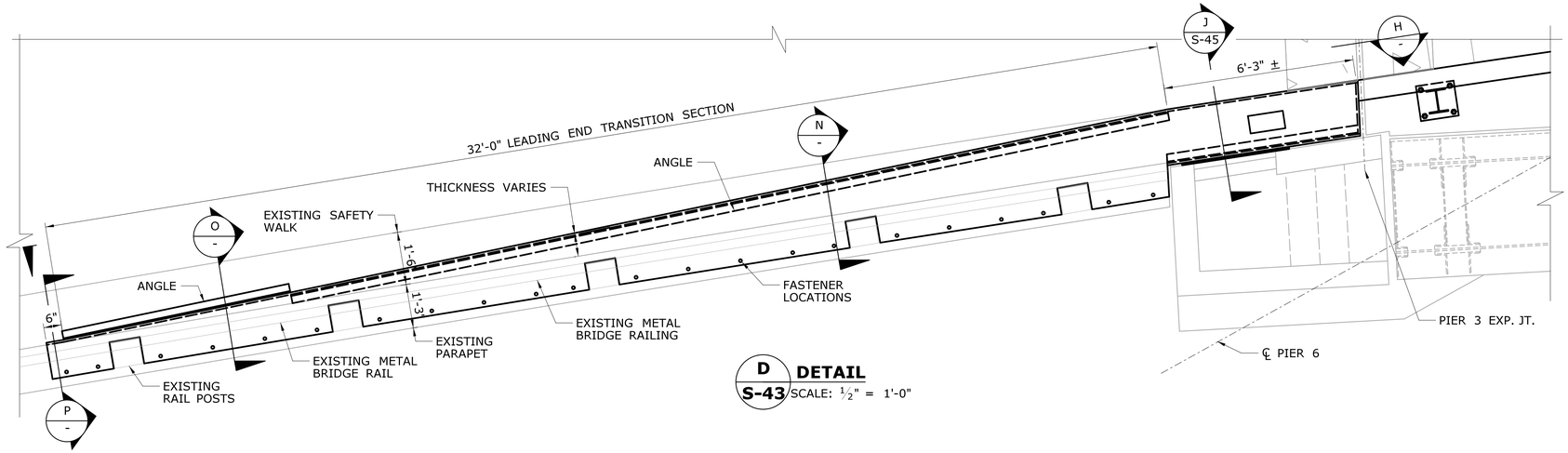

D / S-43 DETAIL
SCALE: ½" = 1'-0"

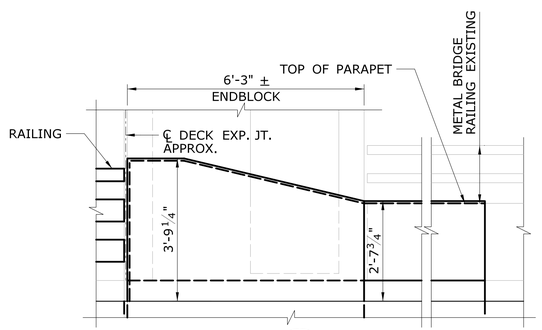

H / - ELEVATION
SCALE: ½" = 1'-0"

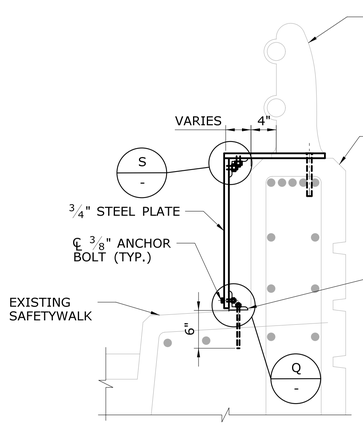

N / - SECTION
SCALE: 1" = 1'-0"

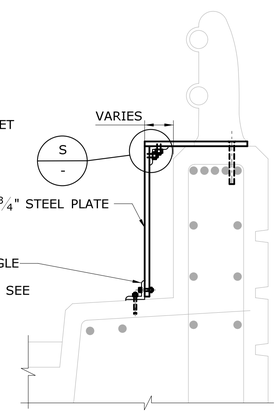

O / - SECTION
SCALE: 1" = 1'-0"

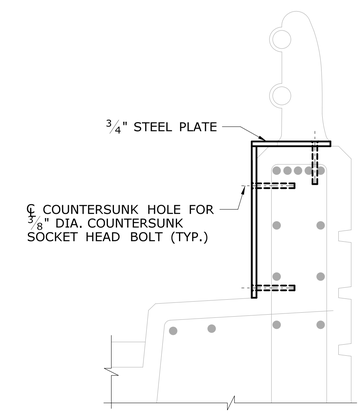

P / - SECTION
SCALE: 1" = 1'-0"

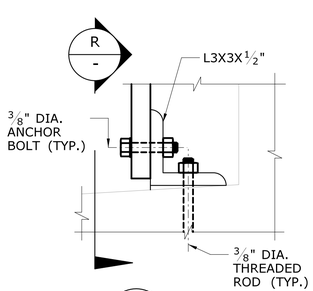

Q / - DETAIL
SCALE: ¼" = 1'-0"

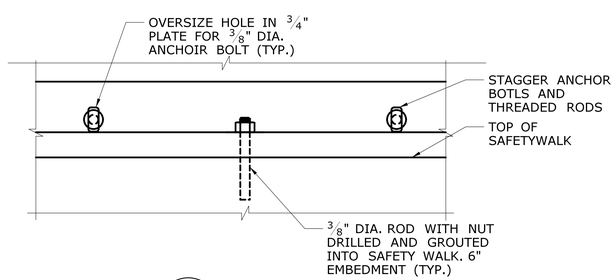

R / - DETAIL
NOT TO SCALE

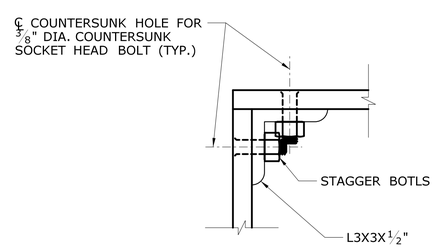

S / - DETAIL
NOT TO SCALE

NOTES:

1. ALL ANCHOR BOLTS/THREADED FROM STEEL PLATES TO CONCRETE DECK/CURB/PARAPET AND BOLTS CONNECTING STEEL PLATES ARE TO BE SPACED @ 12" O.C. FOR STAGGERED BOLTS THE SPACING SHALL BE 12" O.C. (6" STAGGERED) △4
2. FOR MATERIAL REQUIREMENTS OF BOLTS/THREADED RODS SEE SPECIAL PROVISIONS.

ADDENDUM NO. 2

REV.	DATE	REVISION DESCRIPTION	SHEET NO.
-	-	-	-
-	-	-	-
-	-	-	-
-	-	-	-
-	-	-	-
△4	08/30/19	ADDED NOTE	04.46.A2

THE INFORMATION, INCLUDING ESTIMATED QUANTITIES OF WORK, SHOWN ON THESE SHEETS IS BASED ON LIMITED INVESTIGATIONS BY THE STATE AND IS IN NO WAY WARRANTED TO INDICATE THE CONDITIONS OF ACTUAL QUANTITIES OF WORK WHICH WILL BE REQUIRED.

Plotted Date: 8/29/2019

DESIGNER/DRAFTER: DK
CHECKED BY: JG
SCALE AS NOTED

STATE OF CONNECTICUT
DEPARTMENT OF TRANSPORTATION

Filename: ...\SB_MSH_Br00032_135_334_Bridge_Rail_Sheet 4 of 4_A2.dgn

SIGNATURE/BLOCK:

GM2 ASSOCIATES, INC.
115 GLASTONBURY BLVD.
GLASTONBURY, CT 06033

PROJECT TITLE:
REHABILITATION OF BRIDGE NO. 00032, I-95 OVER METRO-NORTH RAILROAD AND LOCAL STREETS

TOWN: **STAMFORD**

DRAWING TITLE: **BRIDGE RAILING 4 OF 4**

PROJECT NO. **135-334**
DRAWING NO. **S-46**
SHEET NO. **04.46.A2**

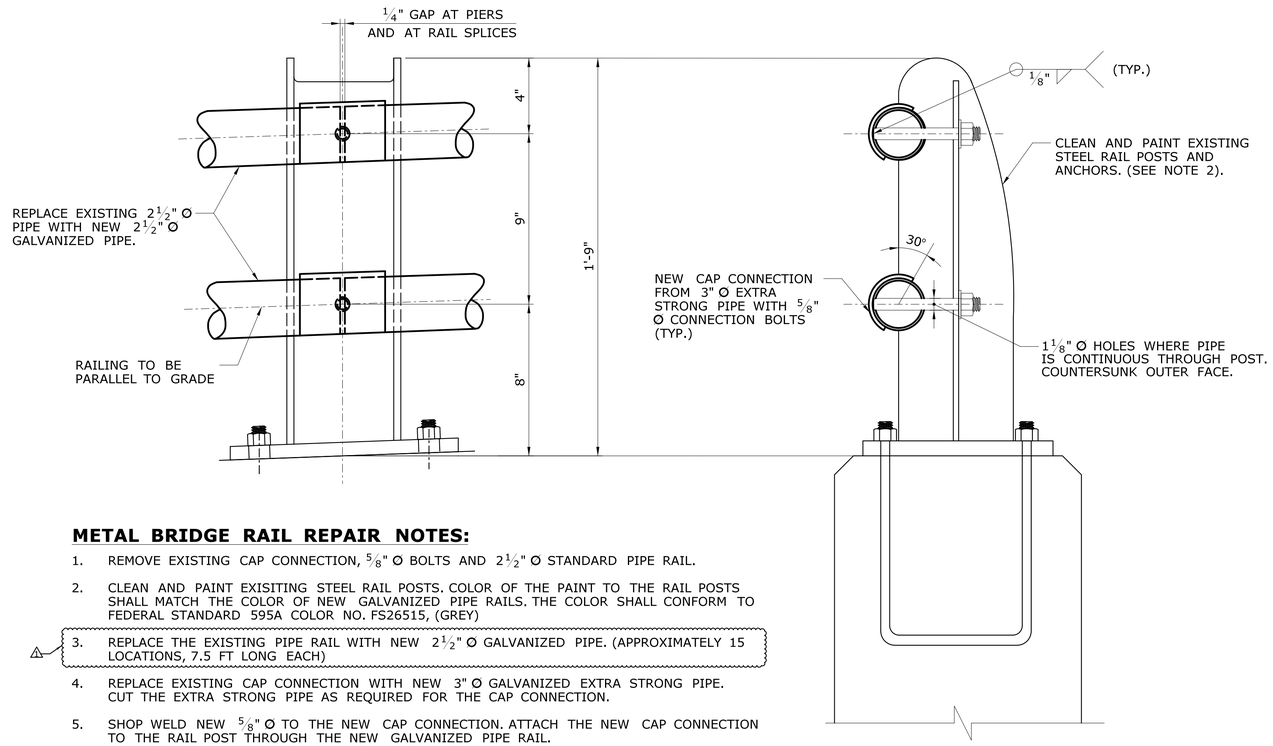

METAL BRIDGE RAIL REPAIR NOTES:

1. REMOVE EXISTING CAP CONNECTION, 5/8" Ø BOLTS AND 2 1/2" Ø STANDARD PIPE RAIL.
2. CLEAN AND PAINT EXISITING STEEL RAIL POSTS. COLOR OF THE PAINT TO THE RAIL POSTS SHALL MATCH THE COLOR OF NEW GALVANIZED PIPE RAILS. THE COLOR SHALL CONFORM TO FEDERAL STANDARD 595A COLOR NO. FS26515, (GREY)
3. REPLACE THE EXISTING PIPE RAIL WITH NEW 2 1/2" Ø GALVANIZED PIPE. (APPROXIMATELY 15 LOCATIONS, 7.5 FT LONG EACH)
4. REPLACE EXISTING CAP CONNECTION WITH NEW 3" Ø GALVANIZED EXTRA STRONG PIPE. CUT THE EXTRA STRONG PIPE AS REQUIRED FOR THE CAP CONNECTION.
5. SHOP WELD NEW 5/8" Ø TO THE NEW CAP CONNECTION. ATTACH THE NEW CAP CONNECTION TO THE RAIL POST THROUGH THE NEW GALVANIZED PIPE RAIL.
6. FOR ADDITIONAL INFORMATION SEE SPECIAL PROVISIONS "REPAIR METAL BRIDGE RAIL".

METAL BRIDGE RAIL REPAIR DETAILS

SCALE: 3" = 1'-0"

ADDENDUM NO. 2

REV.	DATE	REVISION DESCRIPTION	SHEET NO.
-	-	-	-
-	-	-	-
-	-	-	-
-	-	-	-
-	-	-	-
1	08/30/19	INCLUDED ANTICIPATED REPAIR LOCATIONS	04.50.A2

THE INFORMATION, INCLUDING ESTIMATED QUANTITIES OF WORK, SHOWN ON THESE SHEETS IS BASED ON LIMITED INVESTIGATIONS BY THE STATE AND IS IN NO WAY WARRANTED TO INDICATE THE CONDITIONS OF ACTUAL QUANTITIES OF WORK WHICH WILL BE REQUIRED.

Plotted Date: 8/29/2019

DESIGNER/DRAFTER: DK
CHECKED BY: JG
SCALE AS NOTED

STATE OF CONNECTICUT
DEPARTMENT OF TRANSPORTATION

Filename: ...\SB_MSH_Br00032_135_334_Metal_Bridge_Rail_details_A2.dgn

SIGNATURE/ BLOCK:

GM2 ASSOCIATES, INC.
115 GLASTONBURY BLVD.
GLASTONBURY, CT 06033

PROJECT TITLE:
REHABILITATION OF BRIDGE NO. 00032, I-95 OVER METRO-NORTH RAILROAD AND LOCAL STREETS

TOWN: **STAMFORD**

DRAWING TITLE: **METAL BRIDGE RAIL REPAIR DETAILS**

PROJECT NO. **135-334**
DRAWING NO. **S-50**
SHEET NO. **04.50.A2**