03 - STRUCTURES
INDEX OF DRAWINGS

DRAWING NUMBER	DRAWING TITLE	DRAWING NUMBER	DRAWING TITLE
IND-01	STRUCTURES INDEX OF DRAWINGS		
SMS-01	GENERAL INFORMATION		
SMS-02	GENERAL PLAN AND ELEVATION		
SMS-03	SENSOR SUMMARY TABLE		
SMS-04 THRU SMS-05	INSTRUMENTATION OVERVIEW NORTHBOUND BRIDGE		
SMS-06 THRU SMS-07	INSTRUMENTATION OVERVIEW SOUTHBOUND BRIDGE		
SMS-08	ACCELEROMETERS ON STAY CABLES		
SMS-09	ANEMOMETER AND TITLMETERS ON TOP OF TOWER LEG		
SMS-10	CRACKMETERS AT CABLE ANCHORAGES		
SMS-11	CRACKMETERS INSIDE BOX GIRDERS		
SMS-12	CRACKMETERS AND STRAIN GAGES ON TOWER LEGS		
SMS-13	DISPLACEMENT TRANSDUCERS AT EXPANSION BEARINGS		
SMS-14	STRAIN GAGES ON BOX GIRDERS		
SMS-15	STRAIN ROSETTES ON CABLE ANCHOR BOX		
SMS-16	TEMPERATURE SENSORS		
SMS-17	TILTMETERS AT THE TOP OF TOWERS		
SMS-18	ACCESS DETAILS AT ANCHOR PIER 1		
SMS-19 THRU SMS-20	ACCESS DETAILS AND AC POWER AVAILABILITY IN BOX GIRDERS		
SMS-21 THRU SMS-23	ACCESS DETAILS AND AC POWER AVAILABILITY AT TOWER PIER 2		

DESIGNED BY:

AECOM
AECOM
500 ENTERPRISE DRIVE
ROCKY HILL, CT 06067

STATE OF CONNECTICUT
JOHN T. HAPKIEWICZ
No. 29328
LICENSED
PROFESSIONAL ENGINEER

John Hapkiewicz
2018.10.09
14:23:12 -
04'00'

REV.	DATE	REVISION DESCRIPTION	SHEET NO.

Plotted: 10/9/2018

DESIGNER/DRAFTER: G. HRICKO
CHECKED BY: J. PLATOSH

STATE OF CONNECTICUT
DEPARTMENT OF TRANSPORTATION

Filename: ...\V3-cover.dgn

SIGNATURE/ BLOCK:
AECOM
500 ENTERPRISE DRIVE
ROCKY HILL, CT 06067

PROJECT TITLE:
STRUCTURAL MONITORING SYSTEM
PEARL HARBOR MEMORIAL BRIDGE

TOWN: NEW HAVEN

DRAWING TITLE: 03 - STRUCTURES INDEX OF DRAWINGS

PROJECT NO. 92-676
DRAWING NO. IND-01
SHEET NO. 03.001

10/9/2018
P:\Projects\CombOt\10150\092.0532\092-0676 STRUCTURAL MONITORING\V3-cover.dgn

Border Version: 10/19/07

LEGEND

SYMBOLS	ABBREVIATION	DESCRIPTION
●	ACC	ACCELEROMETER
◣	WND	ANEMOMETER
⊢	CRK	CRACKMETER
⇔	DSP	DISPLACEMENT SENSOR
▬	SGC	STRAIN GAGE
■	TMP	TEMPERATURE SENSOR
▲	TLT	TILTMETER
❀	SGS	STRAIN ROSETTE

CONSTRUCTION NOTES (#) :

1. STAND ALONE CONTRACT.
2. CONTRACTOR SHALL DETERMINE FINAL LOCATION OF EQUIPMENT AS APPROVED BY THE ENGINEER.
3. THE CONTRACTOR SHALL TAKE PROPER PRECAUTIONS TO ENSURE THE MOUNTING AND STABILITY OF ALL MEASURING INSTRUMENTS ARE SUITABLE FOR USE UNTIL THE FULL CYCLE OF DATA GATHERING AND STRUCTURAL MONITORING IS COMPLETED.
4. THE CONTRACTOR SHALL BE RESPONSIBLE FOR MAINTENANCE AND STORAGE OF ALL MEASURING INSTRUMENTS AND EQUIPMENT IN PROPER AND MINT CONDITION UNTIL THE FULL CYCLE OF DATA GATHERING AND STRUCTURAL MONITORING IS COMPLETED AND AS DECLARED BY THE ENGINEER.
5. ALL INSTRUMENTS AND EQUIPMENT UTILIZED IN THE STRUCTURAL MONITORING SYSTEM SHALL REMAIN THE PROPERTY OF THE CONTRACTOR UNLESS OTHERWISE NOTED ON THE PLANS AND/OR THE SPECIAL PROVISIONS.
6. THE CONTRACTOR SHALL REPAIR ANY BRIDGE SURFACE DAMAGES AFTER THE SMS REMOVAL. POSSIBLE DAMAGES MAY INCLUDE BUT BE NOT LIMITED TO LOCAL CONCRETE SPALLS LEFT BY MECHANICAL ANCHORAGES OF SENSORS OR CABLES.
7. THE CONTRACTOR SHALL PREPARE AND SUBMIT WORK LOGS TO CTDOT INCLUDING ALL THE SURFACE REPAIRS MADE TO THE BRIDGE AFTER THE SMS REMOVAL.
8. UPON COMPLETION OF SMS REMOVAL AND BRIDGE SURFACE RESTORATION, A WALK-THROUGH SHALL BE CONDUCTED BY REPRESENTATIVES OF CTDOT AND THE CONTRACTOR. A NOTICE FOR SATISFACTORY COMPLETION OF SMS REMOVAL AND RESTORATION WILL BE ISSUED BY CTDOT UPON SATISFACTORY COMPLETION OF THE WALK-THROUGH.

GENERAL NOTES:

1. THE SCOPE OF THIS WORK IS TO INSTALL A STRUCTURAL MONITORING SYSTEM AND MAINTAIN IT'S FULL FUNCTIONALITY FOR 24 MONTHS CYCLE AND AS MODIFIED IN THE SPECIAL PROVISIONS.
2. SEE SPECIAL PROVISIONS FOR PERFORMANCE REQUIREMENTS.
3. SPECIFICATIONS:
   CONNECTICUT DEPARTMENT OF TRANSPORTATION FORM 817, DATED 2016 WITH SUPPLEMENTAL SPECIFICATIONS DATED JANUARY 2018, SPECIAL PROVISIONS, AND MANUFACTURERS CATALOGS ON SPECIAL EQUIPMENT.
4. EXISTING DIMENSIONS:
   DIMENSIONS OF THE BRIDGE STRUCTURE SHOWN ON THESE PLANS ARE FOR GENERAL REFERENCE ONLY. THEY HAVE BEEN TAKEN FROM THE ORIGINAL DESIGN DRAWINGS AND ARE NOT GUARANTEED. THE CONTRACTOR SHALL TAKE ALL FIELD MEASUREMENTS NECESSARY TO ASSURE PROPER FIT AND LAYOUT OF INSTRUMENTS TO ACCOMPLISH THE WORK AND SHALL ASSUME FULL RESPONSIBILITY FOR THEIR ACCURACY. WHEN WORKING DRAWINGS BASED ON FIELD MEASUREMENTS ARE SUBMITTED FOR APPROVAL, THE FIELD MEASUREMENTS SHALL BE SUBMITTED FOR REFERENCE BY THE REVIEWER.
5. NO WORK SHALL BE PERFORMED BELOW THE 100 YEAR FLOODPLAIN ELEVATION (FEMA) 11.8 FEET.

ABBREVIATIONS

ABBREVIATION	EXTENSION
A	AMPERE
AFF	ABOVE FINISHED FLOOR
AFG	ABOVE FINISHED GRADE
AIC	AMPERE INTERRUPTING CAPACITY
AWG	AMERICAN WIRE GAGE
≥	BASELINE
C	CONDUIT
CBOX	DMX CONNECTION BOX
C/B	CIRCUIT BREAKER
CI	CAST IRON
CKT	CIRCUIT
CU	COPPER
DMX	DIGITAL MULTIPLEX (DMX512 LIGHT CONTROL PROTOCOL)
DWG	DRAWING
EA	EACH
F	FUSED
FGC	FIBERGLASS CONDUIT
FNB	FOUNDATION NAVIGATIONAL BEACON
FO	FIBER OPTIC
G	GROUND
GA	GAUGE
GFI	GROUND FAULT INTERRUPTER
GNL	GREEN NAVIGATIONAL LIGHT
HOA	HAND-OFF-AUTO
HID	HIGH INTENSITY DISCHARGE
HV	HIGH VOLTAGE
JB	JUNCTION BOX
K	KELVIN
KV	KILO-VOLT
KVA	KILO-VOLT-AMPHERE
KW	KILO-WATT
LC	LIGHTING CONTACTOR
LCC	LIGHTING CONTROL CABINET
LED	LIGHT EMITTING DIODE
LGT	LIGHTING
LPC	LIGHTING PLAYBACK CONTROLLER
MCB	MAIN CIRCUIT BREAKER
MDP	MAIN DISTRIBUTION PANEL
MH	METAL HALIDE
MLO	MAIN LUG ONLY
MLCP	MAIN LIGHTING CONTROL PANEL
N	NEUTRAL
NB	NORTHBOUND
NF	NON-FUSED
NIC	NOT IN CONTRACT
N.T.S.	NOT TO SCALE
O.C.	ON CENTER
PNL	PANELBOARD
PR	TWISTED PAIR CONDUCTORS
PVC	POLY VINYL CHLORIDE
PWR	POWER
PRMC	PVC COATED, GALVANIZED RMC
RDM	REMOTE DEVICE MANAGEMENT-(DMX)
RGB	RED GREEN BLUE (LED LIGHT)
RMC	RIGID METAL CONDUIT
SHMS	STRUCTURAL HEALTH MONITORING SYSTEM
SB	SOUTHBOUND
SS	STAINLESS STEEL
SW	SWITCH
T, TX	TRANSFORMER
TC	TIMECLOCK
UON	UNLESS OTHERWISE NOTED
V	VOLTS
VA	VOLTS-AMPERE
W	WATT
WP	WEATHERPROOF

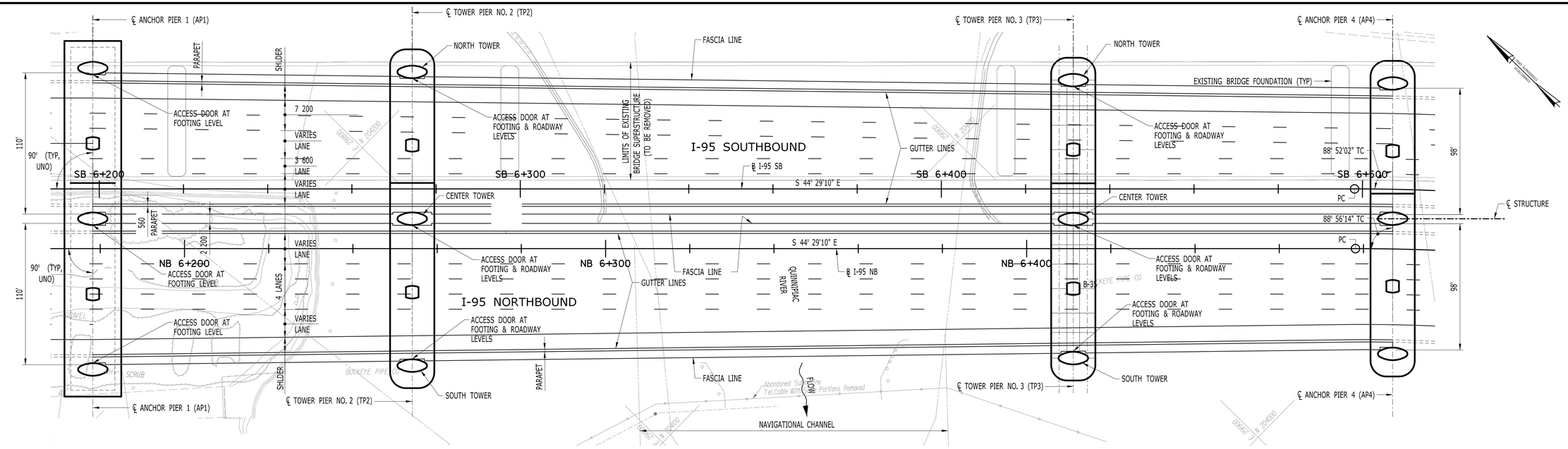

GENERAL PLAN

SCALE: N.T.S.

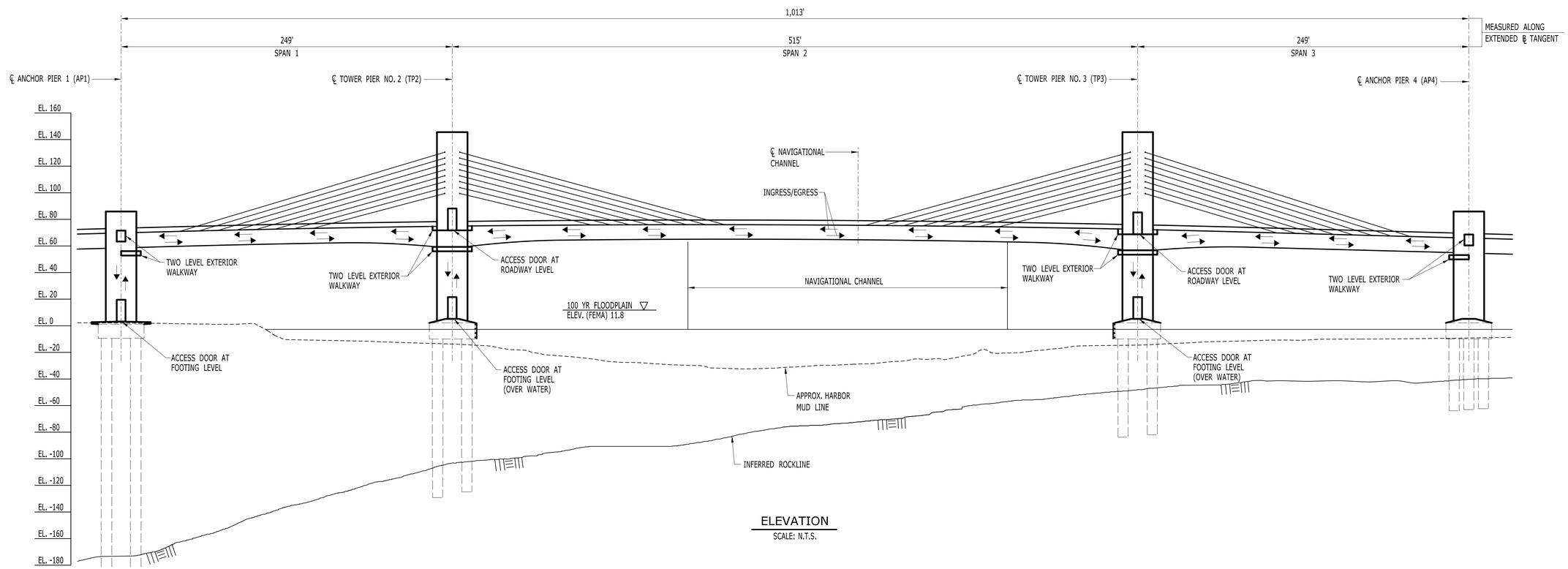

ELEVATION

SCALE: N.T.S.

REV.	DATE	REVISION DESCRIPTION	SHEET NO.

Plotted Date: 10/9/2018

DESIGNER/DRAFTER: G. HRICKO
CHECKED BY: J. PLATOSH

STATE OF CONNECTICUT
DEPARTMENT OF TRANSPORTATION

Filename: ...\HW_MSH_092-676_SMS-02.dgn

AECOM
500 ENTERPRISE DRIVE
ROCKY HILL, CT 06067

PROJECT TITLE: STRUCTURAL MONITORING SYSTEM PEARL HARBOR MEMORIAL BRIDGE

TOWN: NEW HAVEN

DRAWING TITLE: GENERAL PLAN AND ELEVATION

PROJECT NO. 92-676
DRAWING NO. SMS-02
SHEET NO. 03.003

10/9/2018
P:\Projects\CombOut\1021510\092_0532\092-0676 STRUCTURAL MONITORING\HW_MSH_092-676_SMS-02.dgn

Border Version: 11/14/08

Sensor Summary Table

Sensor Type	Abbreviation	Monitoring Purpose	Sensor Measurement	Bridge Element	Sensor Location on Bridge		Active Sensors Count		Reference/ Dummy Sensors	Sampling Rate (Hz)	Active Sensors Names
					Longitudinal	Transverse	Each Location	Sub-Total			
Accelerometers (Biaxial)	ACC	Cable vibration frequencies and existing tension	Cable acceleration in two directions perpendicular to cable axis	One group of cables	Span 2, TP2	South Side	8	8	N/A	100	ACC-TP2-S-1 through ACC-TP2-S-8
Anemometer	WND	Wind characteristics	Wind velocity and direction measured in X, Y, Z directions	Tower leg top	TP2	South Tower Leg	1	1	N/A	10	WND-TP2-SLG
Crackmeters (for Concrete)	CRK	Activeness of existing concrete cracks at cable anchorages	Opening/closing movements of existing concrete cracks	Deck overhang topside	Spans 1 & 2 around TP2	South Side	8	8	1	1	CRK-TP2-ACH-1 through CRK-TP2-ACH-8
Crackmeters (for Concrete)	CRK	Activeness of existing longitudinal cracks on top flange soffit inside box girder	Opening/closing movements of existing concrete cracks	Box girder top flange soffit	Span 2, Closure (CLSR) @ mid-span	NB-CLSR-Cell 2	4	24	1	10	CRK-S2-NB-C2-1 through CRK-S2-NB-C2-4
						NB-CLSR-Cell 3	8				CRK-S2-NB-C3-1 through CRK-S2-NB-C3-8
						NB-CLSR-Cell 4	4				CRK-S2-NB-C4-1 through CRK-S2-NB-C4-4
						SB-CLSR-Cell 2	2				CRK-S2-SB-C2-1 and CRK-S2-SB-C2-2
						SB-CLSR-Cell 3	4				CRK-S2-SB-C3-1 through CRK-S2-SB-C3-4
						SB-CLSR-Cell 4	2				CRK-S2-SB-C4-1 and CRK-S2-SB-C4-2
Crackmeters (for Concrete)	CRK	Activeness of existing horizontal cracks on outer surface of outer tower legs just above tower cross girder	Opening/closing movements of existing concrete cracks	Tower leg base above pier cap	TP2	South Tower Leg	2	8	1	1	CRK-TP2-SLG-H1 and CRK-TP2-SLG-H2
						North Tower Leg	2				CRK-TP2-NLG-H1 and CRK-TP2-NLG-H2
					TP3	South Tower Leg	2				CRK-TP3-SLG-H1 and CRK-TP3-SLG-H2
						North Tower Leg	2				CRK-TP3-NLG-H1 and CRK-TP3-NLG-H2
Crackmeters (for Concrete)	CRK	Activeness of existing vertical concrete cracks on tower leg surface	Opening/closing movements of existing concrete cracks	Tower leg concrete surface	TP2	South Tower Leg	2	2	N/A	10	CRK-TP2-SLG-V1 and CRK-TP2-SLG-V2
Displacement Transducers	DSP	Expansion bearing movements	Longitudinal and vertical bearing movements	Between box girder and pier	AP1	I-95 NB Bridge Box Girder	4	12	1	1	DSP-AP1-NB-LN; DSP-AP1-NB-LS; DSP-AP1-NB-VN; DSP-AP1-NB-VS
					TP2		4				DSP-TP2-NB-LN; DSP-TP2-NB-LS; DSP-TP2-NB-VN; DSP-TP2-NB-VS
					TP3		0				
					AP4		4				DSP-AP4-NB-LN; DSP-AP4-NB-LS; DSP-AP4-NB-VN; DSP-AP4-NB-VS
Strain Gages (for Concrete)	SGC	Stresses on inner surface opposing existing horizontal cracks on outer surface of outer tower legs just above tower cross girder	Vertical concrete strain	Opposing crackmeters on outer face	TP2	South Tower Leg	2	8	1	20	SGC-TP2-SLG-1 and SGC-TP2-SLG-2
						North Tower Leg	2				SGC-TP2-NLG-1 and SGC-TP2-NLG-2
					TP3	South Tower Leg	2				SGC-TP3-SLG-1 and SGC-TP3-SLG-2
						North Tower Leg	2				SGC-TP3-NLG-1 and SGC-TP3-NLG-2
Strain Gages (for Concrete)	SGC	Box girder longitudinal flexural strains and effects of shear lags and torsion @ (-M)cr in Span 1	Longitudinal concrete strain	Top & bottom flanges between webs	Span 1, Segment 9B, 37.25M from begin bridge	SB TS2-9B C1	2	48	1	20	SGC-S1-SB-C1-1 and SGC-S1-SB-C1-2
						SB TS2-9B C2	10				SGC-S1-SB-C2-1 through SGC-S1-SB-C2-10
						SB TS2-9B C3	10				SGC-S1-SB-C3-1 through SGC-S1-SB-C3-10
						SB TS2-9B C4	2				SGC-S1-SB-C4-1 and SGC-S1-SB-C4-2
						NB TN2-9B C2	2				SGC-S1-NB-C2-1 and SGC-S1-NB-C2-2
						NB TN2-9B C3	10				SGC-S1-NB-C3-1 through SGC-S1-NB-C3-10
						NB TN2-9B C4	10				SGC-S1-NB-C4-1 through SGC-S1-NB-C4-10
						NB TN2-9B C5	2				SGC-S1-NB-C5-1 and SGC-S1-NB-C5-2
Strain Gages (for Concrete)	SGC	Box girder longitudinal flexural strains and effects of shear lags and torsion @ (+M)cr in Span 2	Longitudinal concrete strain	Top & bottom flanges between webs	Span 2, closure pour @ mid-span	SB CLSR-3S C1	2	48	1	20	SGC-S2-SB-C1-1 and SGC-S2-SB-C1-2
						SB CLSR-3S C2	10				SGC-S2-SB-C2-1 through SGC-S2-SB-C2-10
						SB CLSR-3S C3	10				SGC-S2-SB-C3-1 through SGC-S2-SB-C3-10
						SB CLSR-3S C4	2				SGC-S2-SB-C4-1 and SGC-S2-SB-C4-2
						NB CLSR-3N C2	2				SGC-S2-NB-C2-1 and SGC-S2-NB-C2-2
						NB CLSR-3N C3	10				SGC-S2-NB-C3-1 through SGC-S2-NB-C3-10
						NB CLSR-3N C4	10				SGC-S2-NB-C4-1 through SGC-S2-NB-C4-10
						NB CLSR-3N C5	2				SGC-S2-NB-C5-1 and SGC-S2-NB-C5-2
Strain Gages (for Concrete)	SGC	Box girder longitudinal flexural strains and effects of shear lags and torsion @ (+M)cr in Span 3	Longitudinal concrete strain	Top & bottom flanges between webs	Span 3, Segment 11A, 284.13M from begin bridge	SB TS3-11A C1	2	48	1	20	SGC-S3-SB-C1-1 and SGC-S3-SB-C1-2
						SB TS3-11A C2	10				SGC-S3-SB-C2-1 through SGC-S3-SB-C2-10
						SB TS3-11A C3	10				SGC-S3-SB-C3-1 through SGC-S3-SB-C3-10
						SB TS3-11A C4	2				SGC-S3-SB-C4-1 and SGC-S3-SB-C4-2
						NB TN3-11A C2	2				SGC-S3-NB-C2-1 and SGC-S3-NB-C2-2
						NB TN3-11A C3	10				SGC-S3-NB-C3-1 through SGC-S3-NB-C3-10
						NB TN3-11A C4	10				SGC-S3-NB-C4-1 through SGC-S3-NB-C4-10
						NB TN3-11A C5	2				SGC-S3-NB-C5-1 and SGC-S3-NB-C5-2
Strain Rosettes (Triaxial for Steel)	SGS	Fatigue of steel anchor box inside Tower	Steel tri-axial strains in anchor box due to cable force variations	Web of steel anchor box	TP2	South Tower Leg	4	4	N/A	20	SGS-TP2-SLG-1 through SGS-TP2-SLG-4
Temperature Sensors	TMP	Temperature gradients in box girder and tower; effects of the sun; air temperature vs. concrete surface temperatures.	Absolute temperatures of concrete and steel surfaces and air	Air	TP2	Top South Tower	1	17	N/A	0.017	TMP-AIR-TP2-SLG
				Concrete surface South Tower	TP2	Outside Surface	1				TMP-C-TP2-SLG-OUT
						Inside Surface	1				TMP-C-TP2-SLG-IN
				Concrete surface Top of deck	TP2	NB Outer Side	1				TMP-C-TP2-DCK-NBO
						NB Inner Side	1				TMP-C-TP2-DCK-NBI
				Concrete surface Pier cap	TP2	NB Outer Edge	1				TMP-C-TP2-PCP-NBO
						NB Inner Edge	1				TMP-C-TP2-PCP-NBI
				Concrete surface Box girder	Span 1, -Mcr	NB C2 & C4 Flg.	4				TMP-C-S1-NB-C2-T/B, TMP-C-S1-NB-C4-T/B
					Span 3, +Mcr	NB C2 & C4 Flg.	4				TMP-C-S3-NB-C2-T/B, TMP-C-S3-NB-C4-T/B
				Steel Surf. inside Anchor box	TP2	S Tower Inner	1				TMP-S-TP2-SLG-IN
						S Tower Outer	1				TMP-S-TP2-SLG-OUT
Tiltmeters (Biaxial)	TLT	Tilting movements of tower legs at their tops	Longitudinal and transverse tilting angles	Tower leg top	TP2	South Leg	1	6	2	1	TLT-TP2-SLG
						Center Leg	1				TLT-TP2-CLG
						North Leg	1				TLT-TP2-NLG
					TP3	South Leg	1				TLT-TP3-SLG
						Center Leg	1				TLT-TP3-CLG
						North Leg	1				TLT-TP3-NLG
TOTAL SENSOR COUNT (some sensors have multiple measurements)								**242**	**10**		

NOTES:

1. SEE SEPARATE PERFORMANCE SPECIFICATIONS FOR REQUIREMENTS.
2. NO RESTRICTIONS TO THE SENSOR TYPE OR TECHNOLOGY AS LONG AS ALL REQUIREMENTS IN THE PERFORMANCE SPECIFICATIONS ARE MET.
3. THE LOCATION OF EACH REFERENCE/DUMMY SENSOR SHALL BE DETERMINED IN THE FIELD AND APPROVED BY THE ENGINEER FOR EVALUATING THE LONG-TERM STABILITY AND SENSITIVITY TO THE AMBIENT ENVIRONMENT OF THE SENSORS. THE DUMMY SENSOR SHALL BE SUBJECT TO THE SAME AMBIENT ENVIRONMENT BUT WITHOUT EXPERIENCING THE LOAD EFFECTS OF THE ACTIVE SENSORS IT IS INTENDED FOR.

REV.	DATE	REVISION DESCRIPTION	SHEET NO.

Plotted Date: 10/9/2018

DESIGNER/DRAFTER: G. HRICKO
CHECKED BY: J. PLATOSH

STATE OF CONNECTICUT
DEPARTMENT OF TRANSPORTATION

Filename: ...\HW_MSH_092-676_SMS-03.dgn

AECOM
500 ENTERPRISE DRIVE
ROCKY HILL, CT 06067

PROJECT TITLE: STRUCTURAL MONITORING SYSTEM PEARL HARBOR MEMORIAL BRIDGE

TOWN: NEW HAVEN

DRAWING TITLE: SENSOR SUMMARY TABLE

PROJECT NO. 92-676
DRAWING NO. SMS-03
SHEET NO. 03.004

10/9/2018
P:\Projects\CombOut\102150\092_0532\092-0676 STRUCTURAL MONITORING\HW_MSH_092-676_SMS-03.dgn

Border Version: 11/14/08

LEGEND

SYMBOLS	ABBREVIATION	DESCRIPTION
●	ACC	ACCELEROMETER
◣	WND	ANEMOMETER
I	CRK	CRACKMETER
↔	DSP	DISPLACEMENT SENSOR
▬	SGC	STRAIN GAGE
■	TMP	TEMPERATURE SENSOR
▲	TLT	TILTMETER
❀	SGS	STRAIN ROSETTE

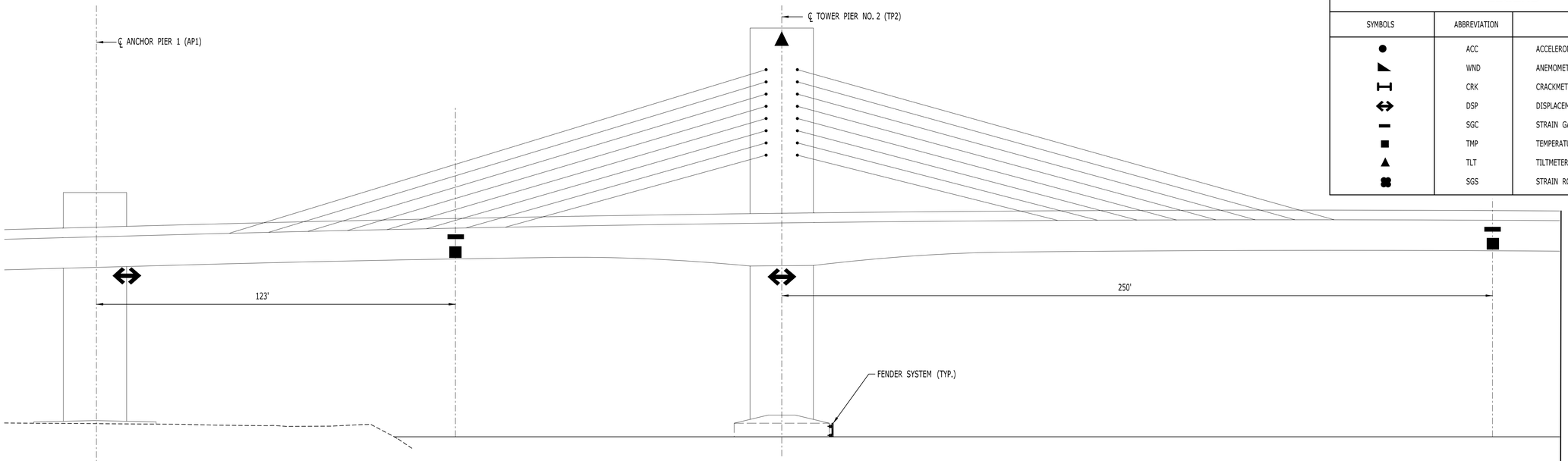

NORTHBOUND BRIDGE ELEVATION, LOOKING NORTHEAST, CENTER TOWER LEG

SCALE: N.T.S.

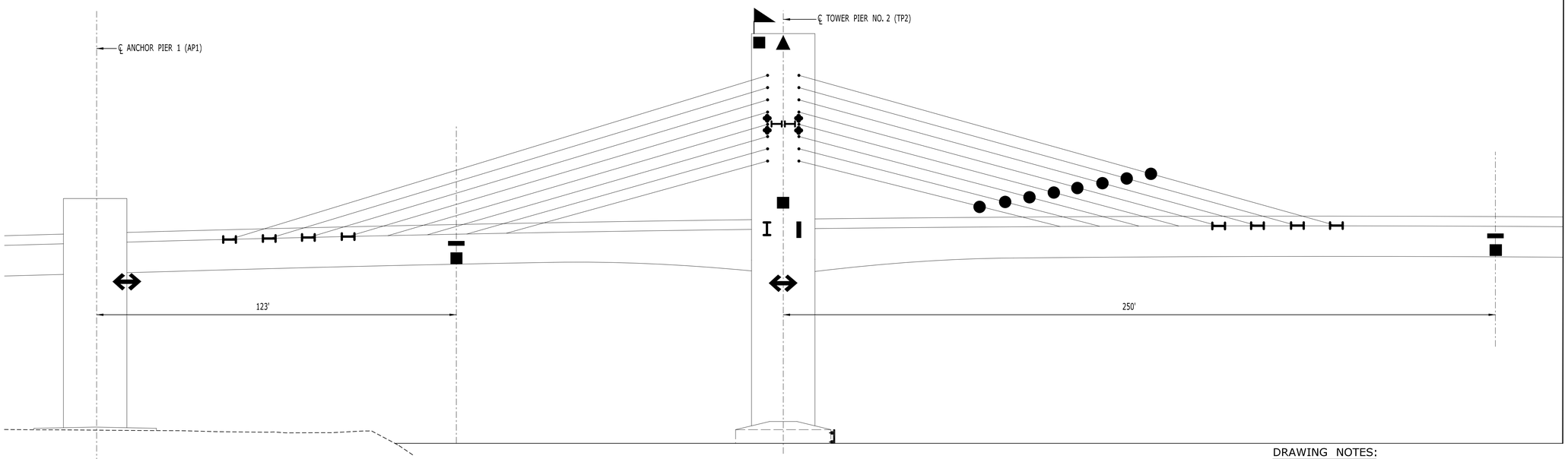

NORTHBOUND BRIDGE ELEVATION, LOOKING NORTHEAST, SOUTH TOWER LEG

SCALE: N.T.S.

MATCH LINE - DRAWING NO. SMS-05

DRAWING NOTES:

1. REFER TO DWG. NO. SMS-03 INSTRUMENTAION SUMMARY TABLE.
2. REFER TO DWG. NOS. SMS-08 THRU SMS-17 FOR SENSOR PLACEMENT DETAILS.

REV.	DATE	REVISION DESCRIPTION	SHEET NO.

Plotted Date: 10/9/2018

DESIGNER/DRAFTER:

CHECKED BY:

STATE OF CONNECTICUT
DEPARTMENT OF TRANSPORTATION

Filename: ...\HW_MSH_092-676_SMS-04.dgn

AECOM
500 ENTERPRISE DRIVE
ROCKY HILL, CT 06067

PROJECT TITLE:
STRUCTURAL MONITORING SYSTEM
PEARL HARBOR MEMORIAL BRIDGE

TOWN: NEW HAVEN

DRAWING TITLE:
INSTRUMENTATION OVERVIEW
NORTHBOUND BRIDGE (1 OF 2)

PROJECT NO. 92-676

DRAWING NO. SMS-04

SHEET NO. 03.005

10/9/2018
P:\Projects\ConnDot\1\02150\092_0532\092-0676 STRUCTURAL MONITORING\HW_MSH_092-676_SMS-04.dgn

Border Version: 11/14/08

DRAWING NOTES:

1. REFER TO DWG. NO. SMS-03 INSTRUMENTAION SUMMARY TABLE.
2. REFER TO DWG. NOS. SMS-08 THRU SMS-17 FOR SENSOR PLACEMENT DETAILS.

LEGEND

SYMBOLS	ABBREVIATION	DESCRIPTION
●	ACC	ACCELEROMETER
◣	WND	ANEMOMETER
I	CRK	CRACKMETER
↔	DSP	DISPLACEMENT SENSOR
▬	SGC	STRAIN GAGE
■	TMP	TEMPERATURE SENSOR
▲	TLT	TILTMETER
❀	SGS	STRAIN ROSETTE

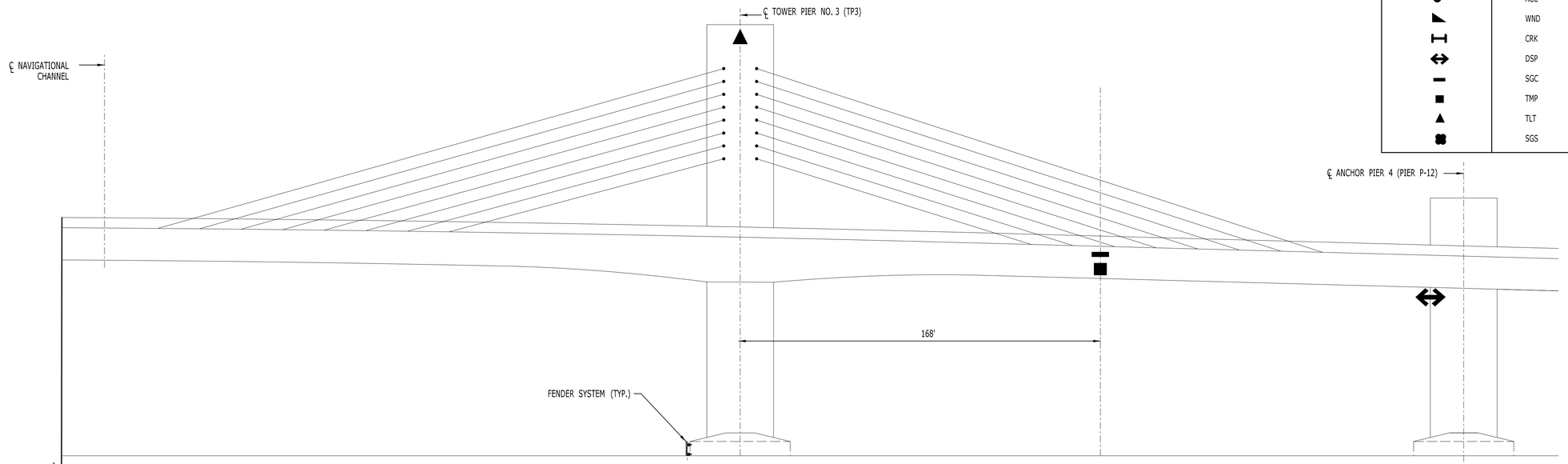

NORTHBOUND BRIDGE ELEVATION, LOOKING NORTHEAST, CENTER TOWER LEG

SCALE: N.T.S.

MATCH LINE - SEE DRAWING NO. SMS-04

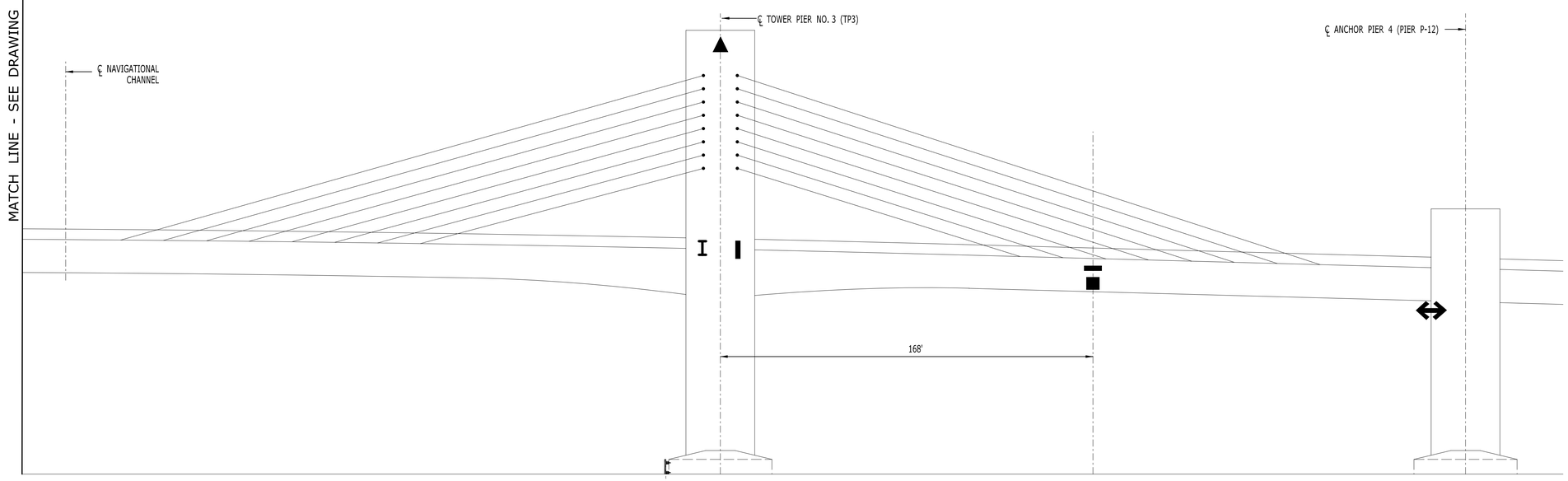

NORTHBOUND BRIDGE ELEVATION, LOOKING NORTHEAST, SOUTH TOWER LEG

SCALE: N.T.S.

REV.	DATE	REVISION DESCRIPTION	SHEET NO.

Plotted Date: 10/9/2018

DESIGNER/DRAFTER:

CHECKED BY:

STATE OF CONNECTICUT
DEPARTMENT OF TRANSPORTATION

Filename: ...\HW_MSH_092-676_SMS-05.dgn

AECOM
500 ENTERPRISE DRIVE
ROCKY HILL, CT 06067

PROJECT TITLE:
STRUCTURAL MONITORING SYSTEM
PEARL HARBOR MEMORIAL BRIDGE

TOWN: NEW HAVEN

DRAWING TITLE:
INSTRUMENTATION OVERVIEW
NORTHBOUND BRIDGE (2 OF 2)

PROJECT NO. 92-676

DRAWING NO. SMS-05

SHEET NO. 03.006

10/9/2018
P:\Projects\CombOct\102150\092_0532\092-0676 STRUCTURAL MONITORING\HW_MSH_092-676_SMS-05.dgn

Border Version: 11/14/08

LEGEND

SYMBOLS	ABBREVIATION	DESCRIPTION
●	ACC	ACCELEROMETER
◣	WND	ANEMOMETER
I	CRK	CRACKMETER
⇔	DSP	DISPLACEMENT SENSOR
▬	SGC	STRAIN GAGE
■	TMP	TEMPERATURE SENSOR
▲	TLT	TILTMETER
❀	SGS	STRAIN ROSETTE

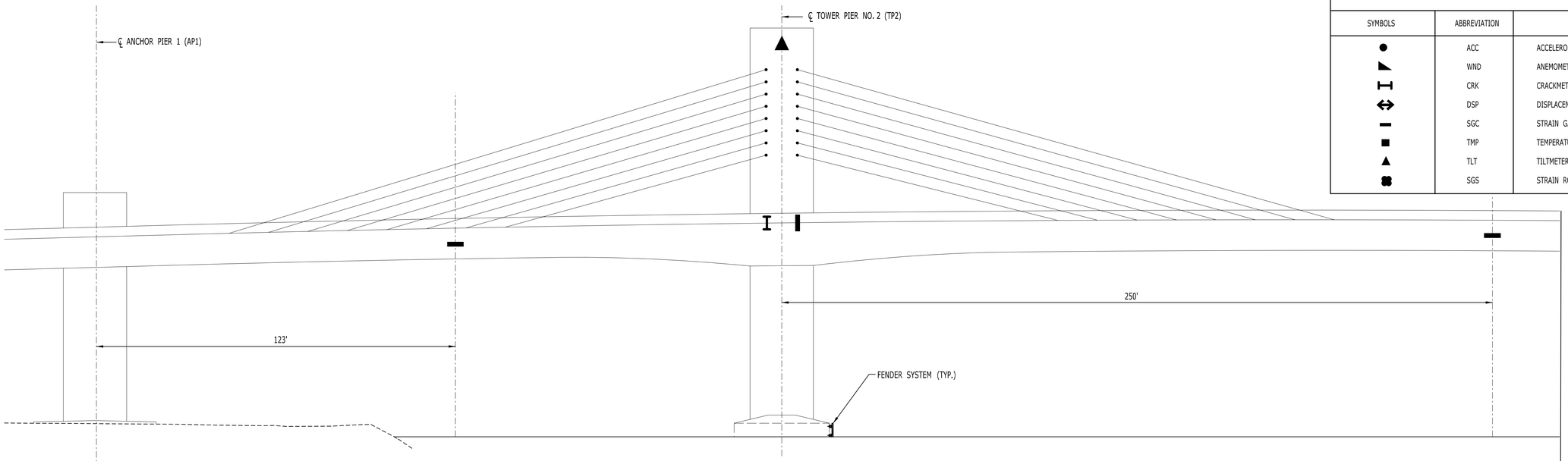

SOUTHBOUND BRIDGE ELEVATION, LOOKING NORTHEAST, NORTH TOWER LEG

SCALE: N.T.S.

MATCH LINE - DRAWING NO. SMS-07

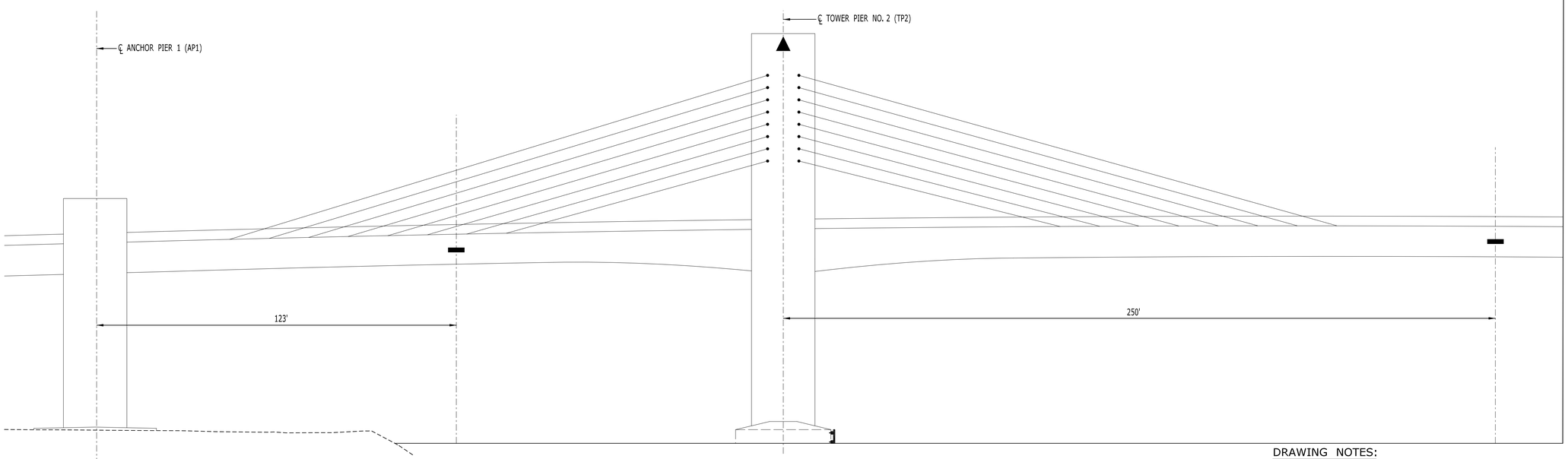

SOUTHBOUND BRIDGE ELEVATION, LOOKING NORTHEAST, CENTER TOWER LEG

SCALE: N.T.S.

DRAWING NOTES:

1. REFER TO DWG. NO. SMS-03 INSTRUMENTAION SUMMARY TABLE.
2. REFER TO DWG. NOS. SMS-08 THRU SMS-17 FOR SENSOR PLACEMENT DETAILS.

REV.	DATE	REVISION DESCRIPTION	SHEET NO.

Plotted Date: 10/9/2018

DESIGNER/DRAFTER:

CHECKED BY:

STATE OF CONNECTICUT
DEPARTMENT OF TRANSPORTATION

Filename: ...\HW_MSH_092-676_SMS-06.dgn

AECOM
500 ENTERPRISE DRIVE
ROCKY HILL, CT 06067

PROJECT TITLE:
STRUCTURAL MONITORING SYSTEM
PEARL HARBOR MEMORIAL BRIDGE

TOWN: NEW HAVEN

DRAWING TITLE:
INSTRUMENTATION OVERVIEW
SOUTHBOUND BRIDGE (1 OF 2)

PROJECT NO. 92-676

DRAWING NO. SMS-06

SHEET NO. 03.007

10/9/2018
P:\Projects\CommDot\1\02150\092_0532\092-0676 STRUCTURAL MONITORING\HW_MSH_092-676_SMS-06.dgn

Border Version: 11/14/08

DRAWING NOTES:

1. REFER TO DWG. NO. SMS-03 INSTRUMENTAION SUMMARY TABLE.
2. REFER TO DWG. NOS. SMS-08 THRU SMS-17 FOR SENSOR PLACEMENT DETAILS.

LEGEND		
SYMBOLS	ABBREVIATION	DESCRIPTION
●	ACC	ACCELEROMETER
◣	WND	ANEMOMETER
I	CRK	CRACKMETER
⇔	DSP	DISPLACEMENT SENSOR
▬	SGC	STRAIN GAGE
■	TMP	TEMPERATURE SENSOR
▲	TLT	TILTMETER
❀	SGS	STRAIN ROSETTE

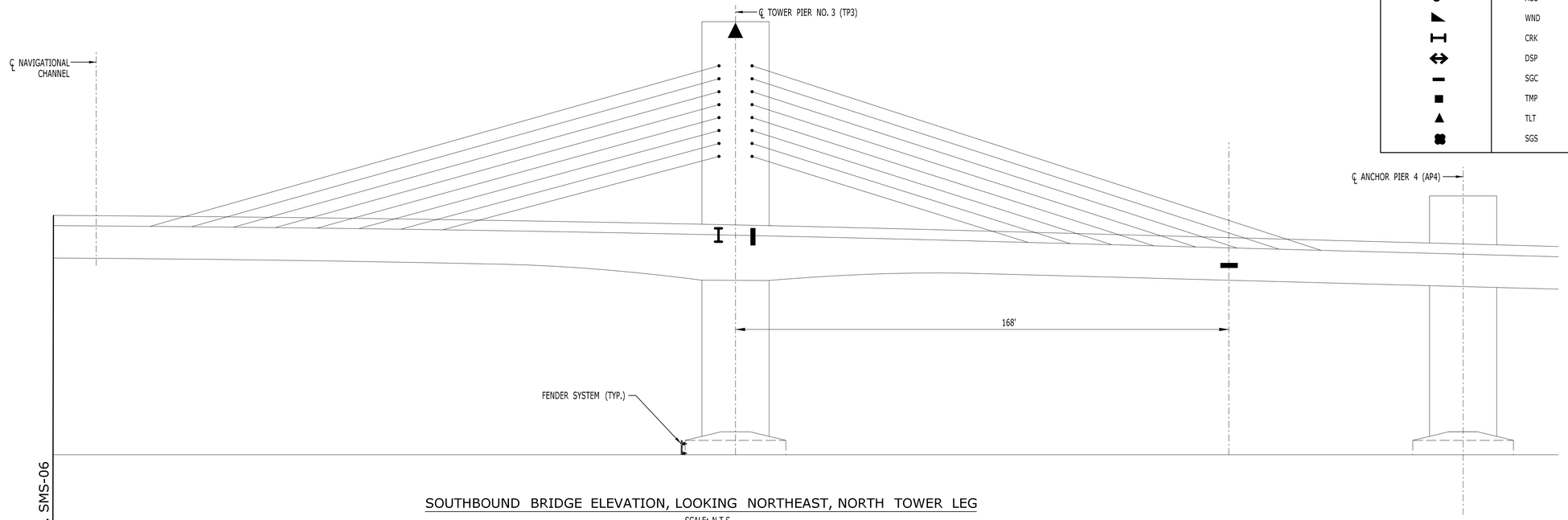

SOUTHBOUND BRIDGE ELEVATION, LOOKING NORTHEAST, NORTH TOWER LEG

SCALE: N.T.S.

MATCH LINE - SEE DRAWING NO. SMS-06

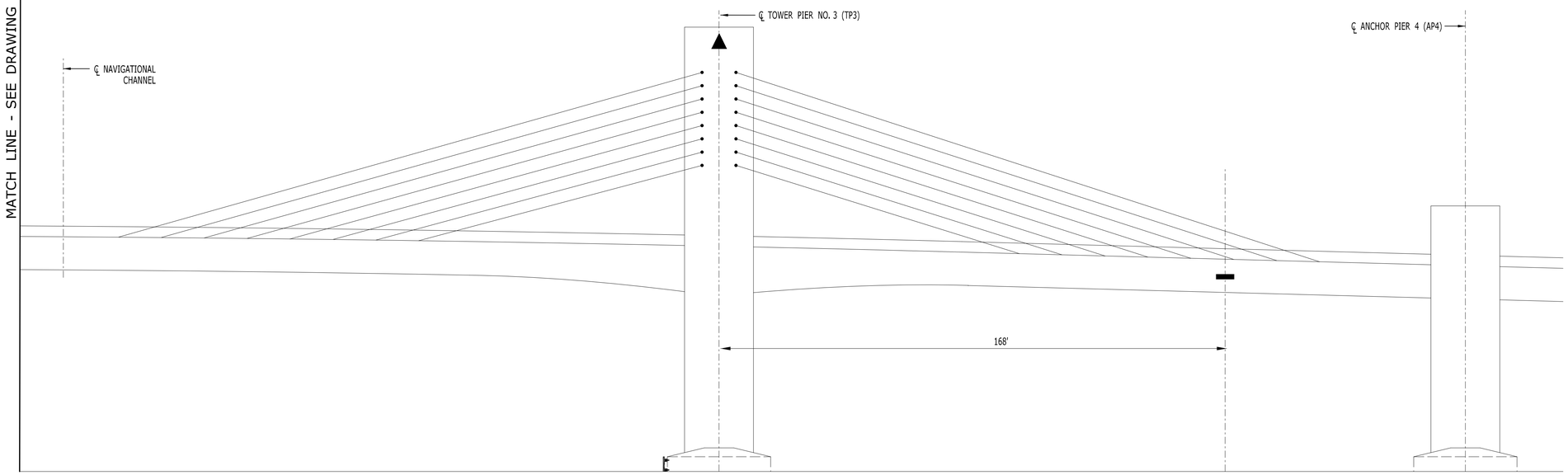

SOUTHBOUND BRIDGE ELEVATION, LOOKING NORTHEAST, CENTER TOWER LEG

SCALE: N.T.S.

REV.	DATE	REVISION DESCRIPTION	SHEET NO.

Plotted Date: 10/9/2018

DESIGNER/DRAFTER:

CHECKED BY:

STATE OF CONNECTICUT
DEPARTMENT OF TRANSPORTATION

Filename: ...\HW_MSH_092-676_SMS-07.dgn

AECOM
500 ENTERPRISE DRIVE
ROCKY HILL, CT 06067

PROJECT TITLE:
STRUCTURAL MONITORING SYSTEM
PEARL HARBOR MEMORIAL BRIDGE

TOWN: NEW HAVEN

DRAWING TITLE:
INSTRUMENTATION OVERVIEW
SOUTHBOUND BRIDGE (2 OF 2)

PROJECT NO. 92-676

DRAWING NO. SMS-07

SHEET NO. 03.008

10/9/2018
P:\Projects\ConnDot\1021501\092_0532\092-0676 STRUCTURAL MONITORING\HW_MSH_092-676_SMS-07.dgn

Border Version: 11/14/08

LEGEND		
SYMBOLS	ABBREVIATION	DESCRIPTION
●	ACC	ACCELEROMETER
◣	WND	ANEMOMETER
I	CRK	CRACKMETER
⇔	DSP	DISPLACEMENT SENSOR
▬	SGC	STRAIN GAGE
■	TMP	TEMPERATURE SENSOR
▲	TLT	TILTMETER
✖	SGS	STRAIN ROSETTE

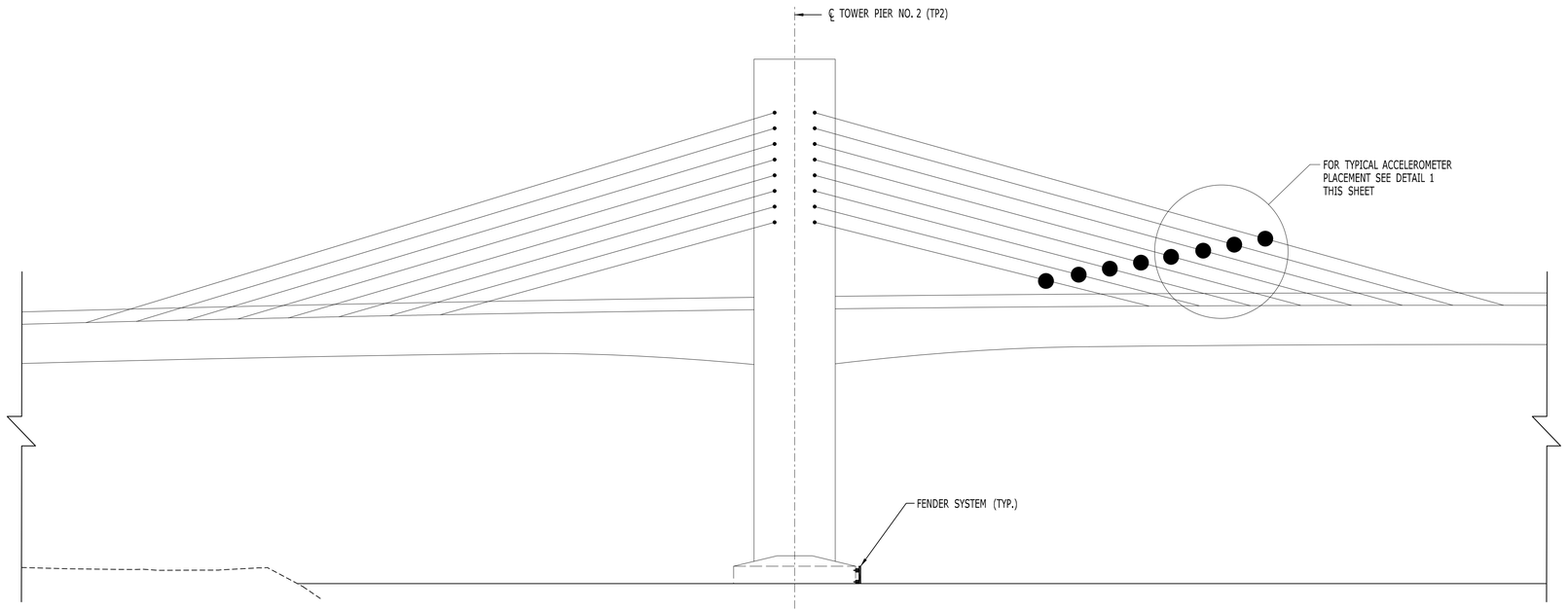

NORTHBOUND BRIDGE ELEVATION, LOOKING NORTHEAST, SOUTH TOWER LEG

SCALE: N.T.S.

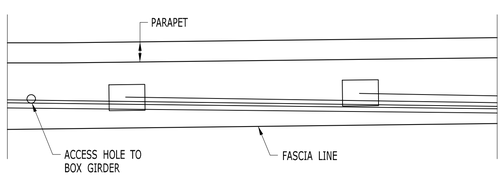

DETAIL 1

SCALE: N.T.S.

NOTE:

ACCELEROMETER CABLES RUN DOWN TO DECK LEVEL SPIRALLY ALONG THE STAY CABLE AND ENTER THE BOX GIRDER THROUGH EXISTING ACCESS HOLES IN DECK OVERHANG.

REV.	DATE	REVISION DESCRIPTION	SHEET NO.

Plotted Date: 10/9/2018

DESIGNER/DRAFTER:

CHECKED BY:

STATE OF CONNECTICUT
DEPARTMENT OF TRANSPORTATION

Filename: ...\HW_MSH_092-676_SMS-08.dgn

AECOM
500 ENTERPRISE DRIVE
ROCKY HILL, CT 06067

PROJECT TITLE:
STRUCTURAL MONITORING SYSTEM
PEARL HARBOR MEMORIAL BRIDGE

TOWN: NEW HAVEN

DRAWING TITLE:
ACCELEROMETERS ON STAY CABLES

PROJECT NO. 92-676

DRAWING NO. SMS-08

SHEET NO. 03.009

10/9/2018
P:\Projects\CombOct\1021501\092_0532\092-0676 STRUCTURAL MONITORING\HW_MSH_092-676_SMS-08.dgn

Border Version: 11/14/08

LEGEND

SYMBOLS	ABBREVIATION	DESCRIPTION
●	ACC	ACCELEROMETER
◣	WND	ANEMOMETER
I	CRK	CRACKMETER
↔	DSP	DISPLACEMENT SENSOR
—	SGC	STRAIN GAGE
■	TMP	TEMPERATURE SENSOR
▲	TLT	TILTMETER
⊞	SGS	STRAIN ROSETTE

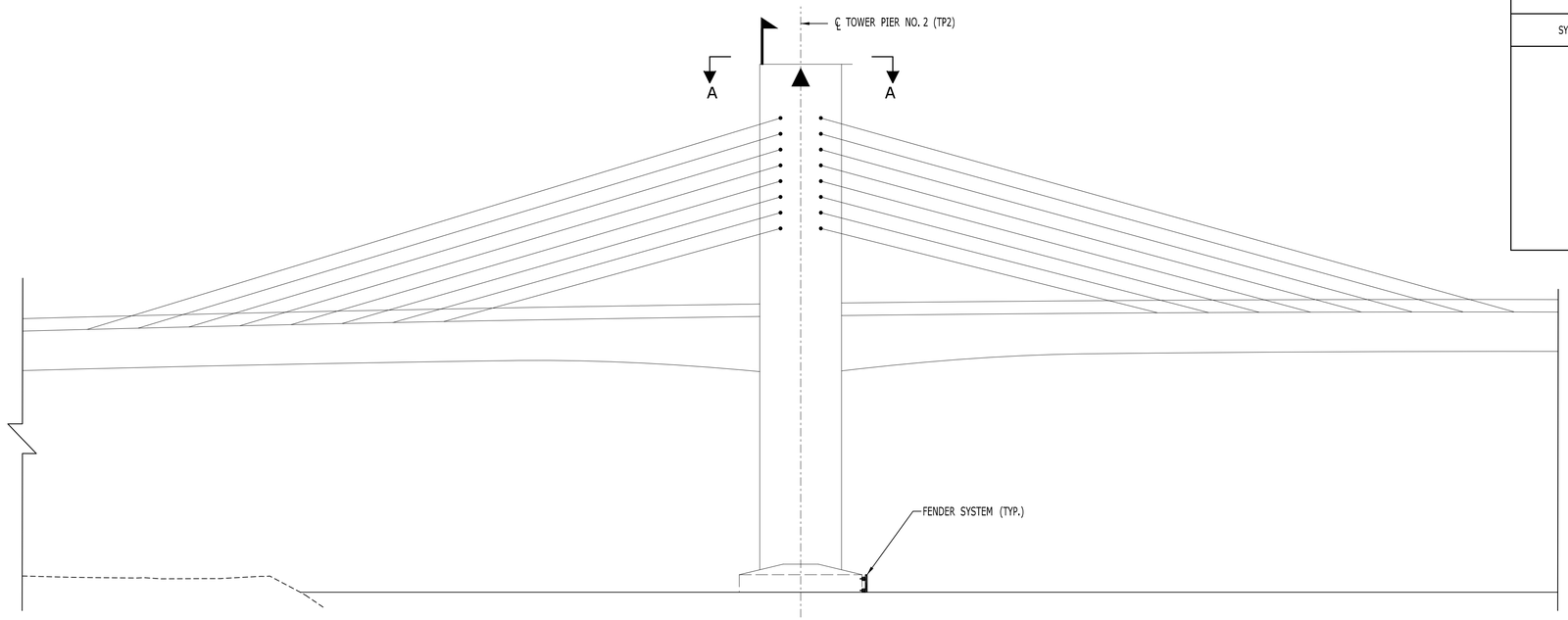

NORTHBOUND BRIDGE ELEVATION, LOOKING NORTHEAST

SCALE: N.T.S.

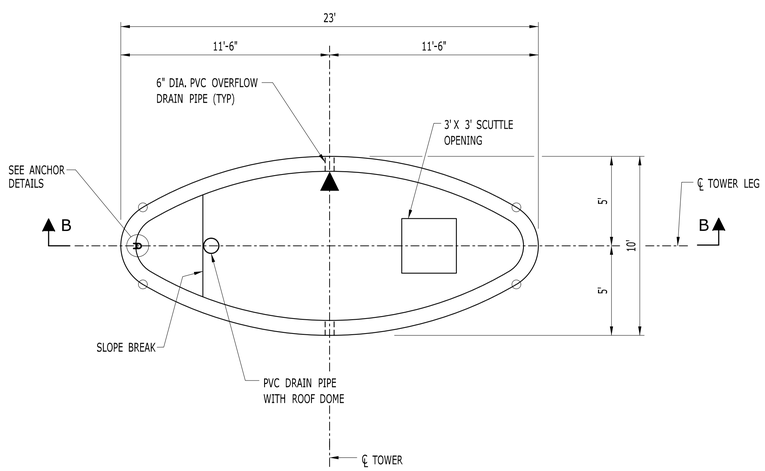

VIEW A-A

SCALE: N.T.S.

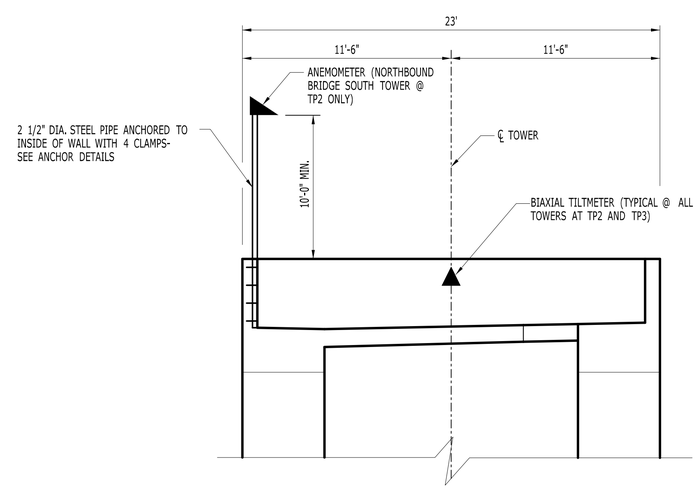

SECTION B-B

NORTHBOUND BRIDGE SOUTH TOWER AT TP2 SHOWN, OTHERS SIMILAR

SCALE: N.T.S.

NOTES:

1. USE 1/4" MASONRY SCREWS FOR PIPE BRACKET ATTACHMENT. FOUR SCREWS ARE REQUIRED AT EACH BRACKET.
2. THE PIPE BRACKET MASONRY FASTENERS SHALL HAVE A MAXIMUM EMBEDMENT DEPTH OF 2".
3. THE PIPE BRACKET SHALL BE FABRICATED FROM 16 GAGE GRADE 50 GALVANIZED STEEL.
4. THE MOUNTING PIPE SHALL BE 2 1/2" IN DIAMETER WITH A MINIMUM WALL THICKNESS OF 0.125". THE MOUNTING PIPE SHALL BE FABRICATED FROM ASTM F1043 GROUP IC GRADE 50 GALVANIZED STEEL PIPE.
5. THE MOUNTING PIPE SHALL BE EQUIPPED WITH A BASE CAP THAT PREVENTS SLIPPAGE PAST THE PIPE BRACKET.

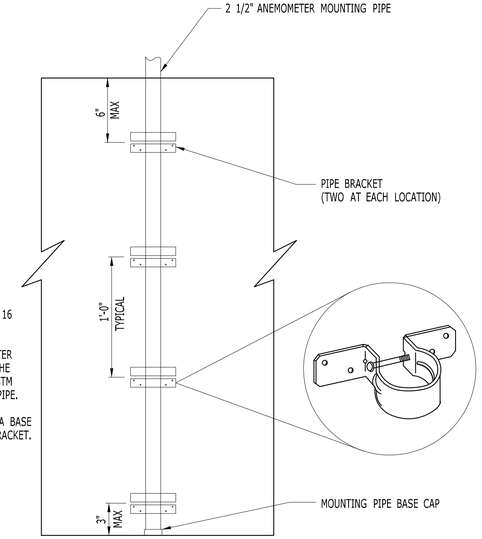

ANCHOR DETAILS

SCALE: N.T.S.

REV.	DATE	REVISION DESCRIPTION	SHEET NO.

Plotted Date: 10/9/2018

DESIGNER/DRAFTER:

CHECKED BY:

STATE OF CONNECTICUT
DEPARTMENT OF TRANSPORTATION

Filename: ...\HW_MSH_092-676_SMS-09.dgn

AECOM
500 ENTERPRISE DRIVE
ROCKY HILL, CT 06067

PROJECT TITLE:
STRUCTURAL MONITORING SYSTEM
PEARL HARBOR MEMORIAL BRIDGE

TOWN: NEW HAVEN

DRAWING TITLE: ANEMOMETER AND TILTMETERS ON TOP OF TOWER LEG

PROJECT NO. 92-676

DRAWING NO. SMS-09

SHEET NO. 03.010

10/9/2018
P:\Projects\ConnDot\102150\092_0332\092-0676_STRUCTURAL MONITORING\HW_MSH_092-676_SMS-09.dgn

Border Version: 11/14/08

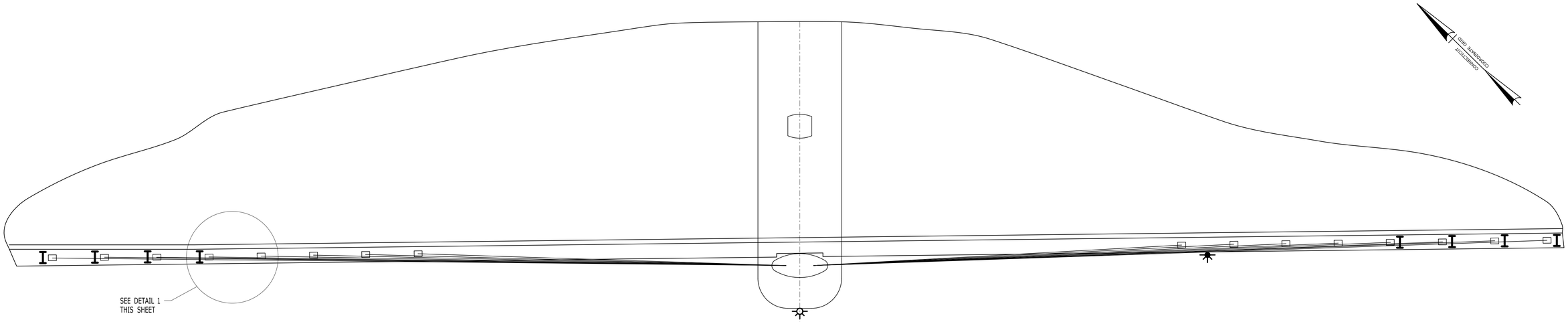

NOTES:
1. LOCATIONS OF CRACKMETERS ARE TO BE DETERMINED IN THE FIELD AND DIRECTED BY THE ENGINEER.

NORTHBOUND BRIDGE PARTIAL PLAN

SCALE: N.T.S.

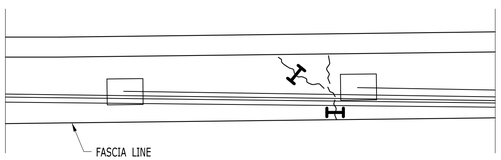

DETAIL 1

N.T.S.

LEGEND

SYMBOLS	ABBREVIATION	DESCRIPTION
●	ACC	ACCELEROMETER
◣	WND	ANEMOMETER
I	CRK	CRACKMETER
⇔	DSP	DISPLACEMENT SENSOR
▬	SGC	STRAIN GAGE
■	TMP	TEMPERATURE SENSOR
▲	TLT	TILTMETER
✱	SGS	STRAIN ROSETTE

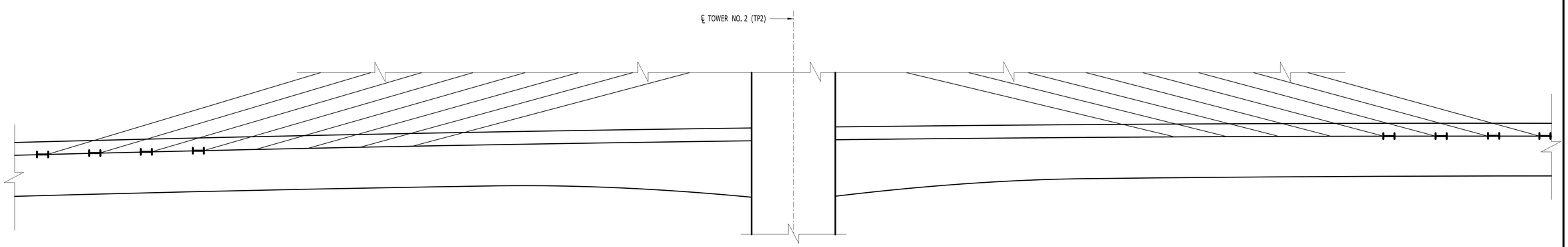

NORTHBOUND BRIDGE PARTIAL ELEVATION

SCALE: N.T.S.

REV.	DATE	REVISION DESCRIPTION	SHEET NO.

Plotted Date: 10/9/2018

DESIGNER/DRAFTER:

CHECKED BY:

STATE OF CONNECTICUT
DEPARTMENT OF TRANSPORTATION

Filename: ...\HW_MSH_092-676_SMS-10.dgn

AECOM
500 ENTERPRISE DRIVE
ROCKY HILL, CT 06067

PROJECT TITLE:
STRUCTURAL MONITORING SYSTEM
PEARL HARBOR MEMORIAL BRIDGE

TOWN: NEW HAVEN

DRAWING TITLE: CRACKMETERS AT CABLE ANCHORAGES

PROJECT NO. 92-676

DRAWING NO. SMS-10

SHEET NO. 03.011

10/9/2018
P:\Projects\CombOct\10215\092_0532\092-0676 STRUCTURAL MONITORING\HW_MSH_092-676_SMS-10.dgn

Border Version: 11/14/08

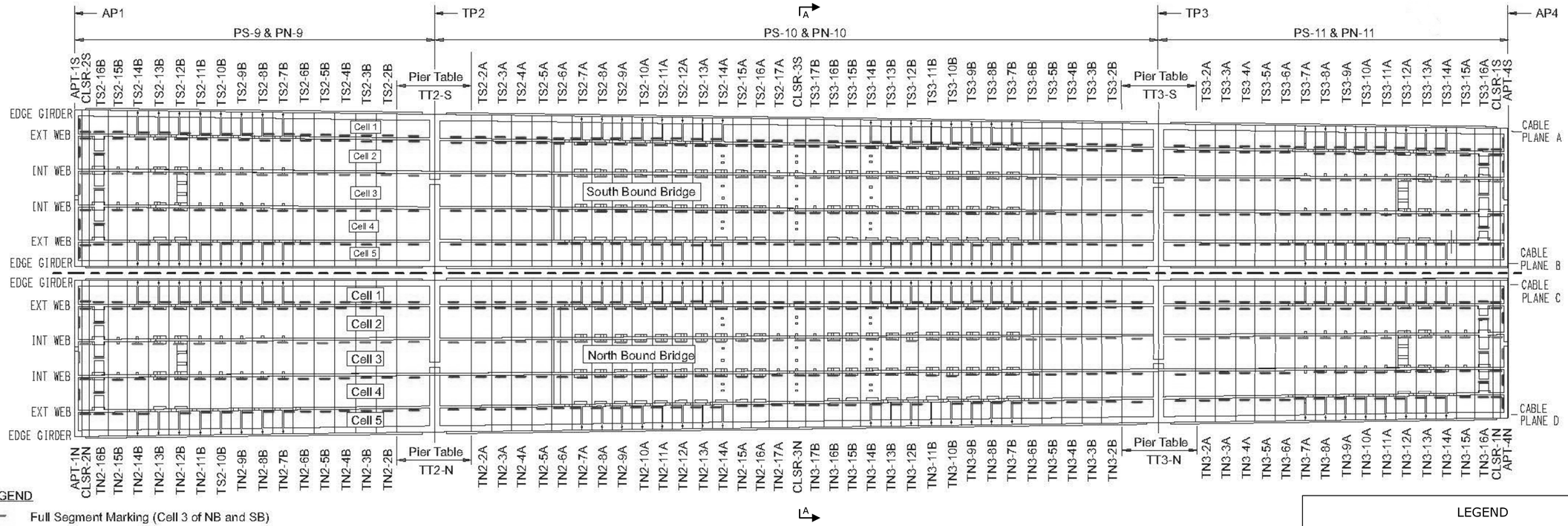

LEGEND

- Full Segment Marking (Cell 3 of NB and SB)
- Abbreviated Segment Marking (Cells 1, 2, 4 and 5 of NB and SB)

NOTES:
1. LOCATIONS OF CRACKMETERS ARE TO BE DETERMINED IN THE FIELD AND DIRECTED BY THE ENGINEER.

SEGMENT KEY MARKING PLAN

SCALE: N.T.S.

LEGEND

SYMBOLS	ABBREVIATION	DESCRIPTION
●	ACC	ACCELEROMETER
◣	WND	ANEMOMETER
⊢⊣	CRK	CRACKMETER
↔	DSP	DISPLACEMENT SENSOR
▬	SGC	STRAIN GAGE
■	TMP	TEMPERATURE SENSOR
▲	TLT	TILTMETER
✱	SGS	STRAIN ROSETTE

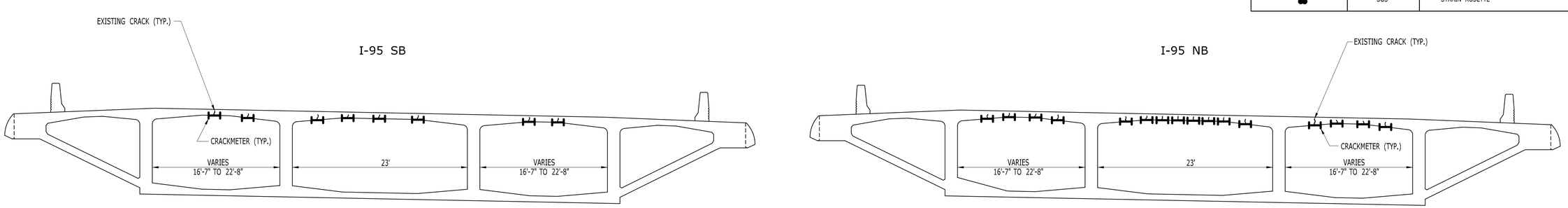

SECTION A-A (NEAR MIDDLE OF SPAN 2)

SCALE: N.T.S.

REV.	DATE	REVISION DESCRIPTION	SHEET NO.

Plotted Date: 10/9/2018

DESIGNER/DRAFTER:

CHECKED BY:

STATE OF CONNECTICUT
DEPARTMENT OF TRANSPORTATION

Filename: ...\HW_MSH_092-676_SMS-11.dgn

AECOM
500 ENTERPRISE DRIVE
ROCKY HILL, CT 06067

PROJECT TITLE:
STRUCTURAL MONITORING SYSTEM
PEARL HARBOR MEMORIAL BRIDGE

TOWN: NEW HAVEN

DRAWING TITLE: CRACKMETERS INSIDE BOX GIRDERS

PROJECT NO. 92-676

DRAWING NO. SMS-11

SHEET NO. 03.012

10/9/2018
P:\Projects\ConnDot\f102150\092_0932\092-0676_STRUCTURAL_MONITORING\HW_MSH_092-676_SMS-11.dgn

Border Version: 11/14/08

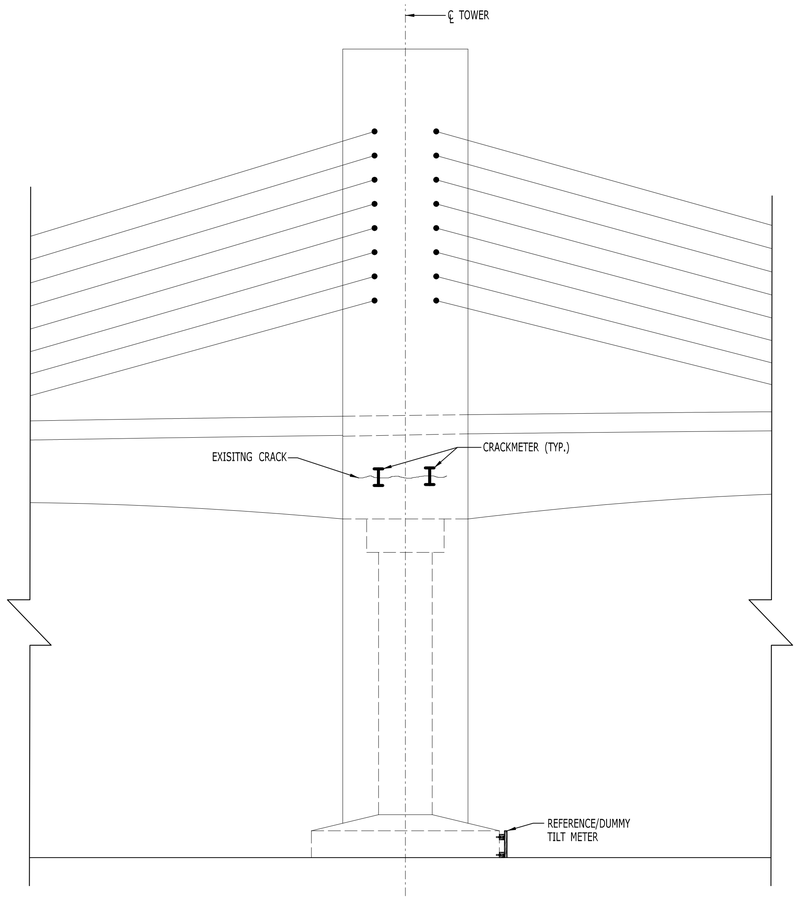

OUTER TOWER LEG, OUTER FACE (TYP.)

SCALE: N.T.S.

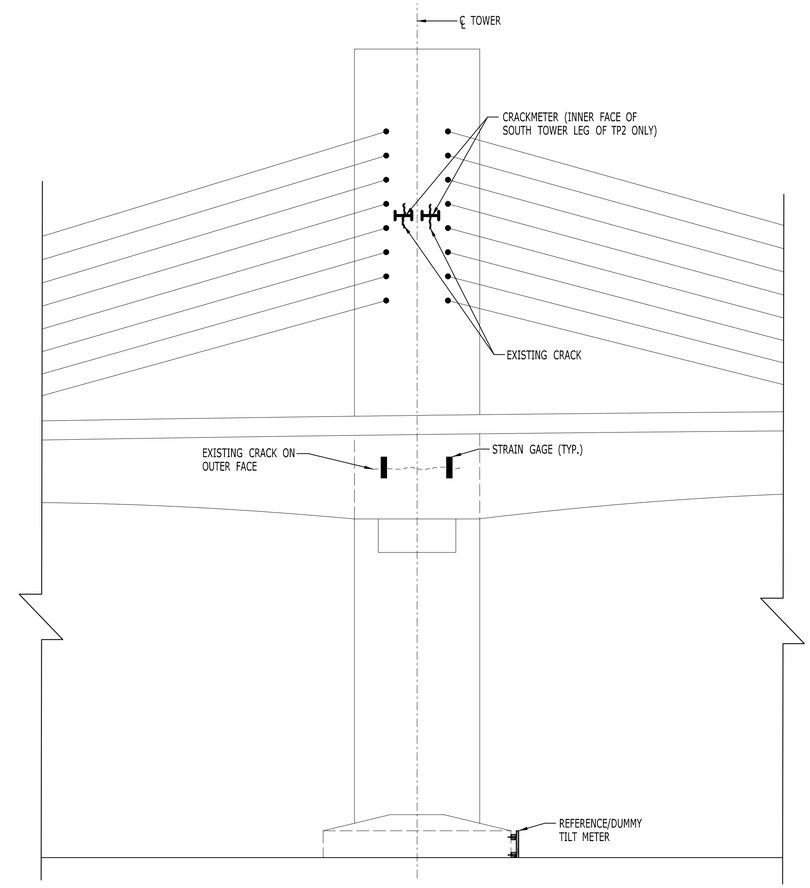

OUTER TOWER LEG, INNER FACE (TYP.)

SCALE: N.T.S.

LEGEND

SYMBOLS	ABBREVIATION	DESCRIPTION
●	ACC	ACCELEROMETER
◣	WND	ANEMOMETER
I	CRK	CRACKMETER
↔	DSP	DISPLACEMENT SENSOR
▬	SGC	STRAIN GAGE
■	TMP	TEMPERATURE SENSOR
▲	TLT	TILTMETER
✱	SGS	STRAIN ROSETTE

NOTE:
1. THE EXISTING CRACK TO BE MONITORED WILL BE DETERMINED IN THE FIELD AND DIRECTED BY THE ENGINEER.

REV.	DATE	REVISION DESCRIPTION	SHEET NO.

Plotted Date: 10/9/2018

DESIGNER/DRAFTER:

CHECKED BY:

STATE OF CONNECTICUT
DEPARTMENT OF TRANSPORTATION

Filename: ...\HW_MSH_092-676_SMS-12.dgn

AECOM
500 ENTERPRISE DRIVE
ROCKY HILL, CT 06067

PROJECT TITLE:
STRUCTURAL MONITORING SYSTEM
PEARL HARBOR MEMORIAL BRIDGE

TOWN: NEW HAVEN

DRAWING TITLE: CRACKMETERS AND STRAIN GAGES ON TOWER LEGS

PROJECT NO. 92-676

DRAWING NO. SMS-12

SHEET NO. 03.013

10/9/2018
P:\Projects\ConnDot\102150\092_0532\092-0676_STRUCTURAL MONITORING\HW_MSH_092-676_SMS-12.dgn

Border Version: 11/14/08

BEARING KEY PLAN

SCALE: N.T.S.

LEGEND

SYMBOLS	ABBREVIATION	DESCRIPTION
●	ACC	ACCELEROMETER
◣	WND	ANEMOMETER
I	CRK	CRACKMETER
↔	DSP	DISPLACEMENT SENSOR
▬	SGC	STRAIN GAGE
□	TMP	TEMPERATURE SENSOR
▲	TLT	TILTMETER
✱	SGS	STRAIN ROSETTE

BEARING LEGEND

- □ FIXED BEARING
- UNI-DIRECTIONAL (FIXED TRANSVERSELY) BEARING
- UNI-DIRECTIONAL (FIXED LONGITUDINALY) BEARING
- MULTI-DIRECTIONAL BEARING
- SHEAR LOCK

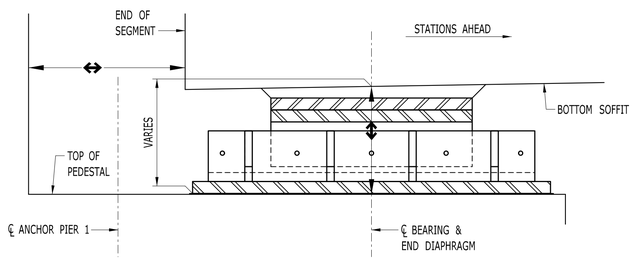

SECTION A-A

SCALE: N.T.S.

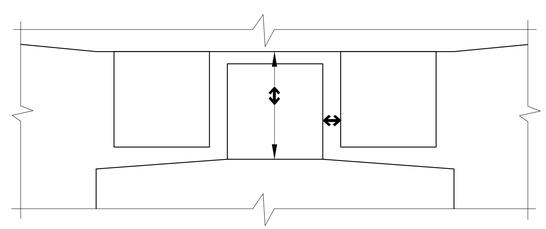

SECTION C-C

SCALE: N.T.S.

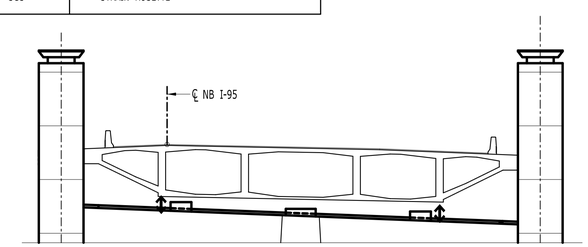

SECTION B'-B'

SCALE: N.T.S.

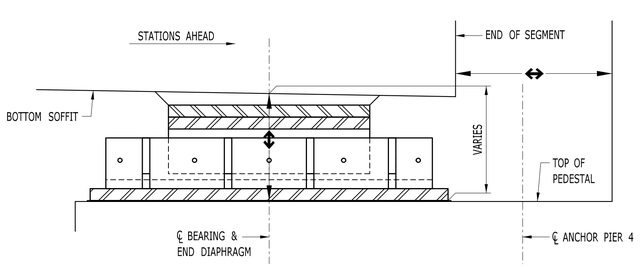

SECTION A'-A'

SCALE: N.T.S.

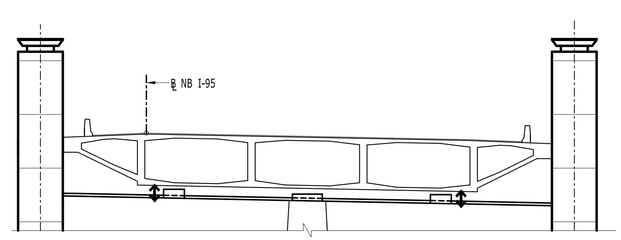

SECTION B-B

SCALE: N.T.S.

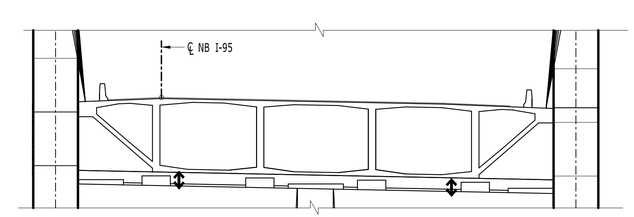

SECTION D-D

SCALE: N.T.S.

REV.	DATE	REVISION DESCRIPTION	SHEET NO.

Plotted Date: 10/9/2018

DESIGNER/DRAFTER:

CHECKED BY:

STATE OF CONNECTICUT
DEPARTMENT OF TRANSPORTATION

Filename: ...\HW_MSH_092-676_SMS-13.dgn

AECOM
500 ENTERPRISE DRIVE
ROCKY HILL, CT 06067

PROJECT TITLE:
STRUCTURAL MONITORING SYSTEM
PEARL HARBOR MEMORIAL BRIDGE

TOWN: NEW HAVEN

DRAWING TITLE:
DISPLACEMENT TRANSDUCERS
AT EXPANSION BEARINGS

PROJECT NO. 92-676

DRAWING NO. SMS-13

SHEET NO. 03.014

10/9/2018
P:\Projects\Combo\11021500\092_0532\092-0676 STRUCTURAL MONITORING\HW_MSH_092-676_SMS-13.dgn

Border Version: 11/14/08

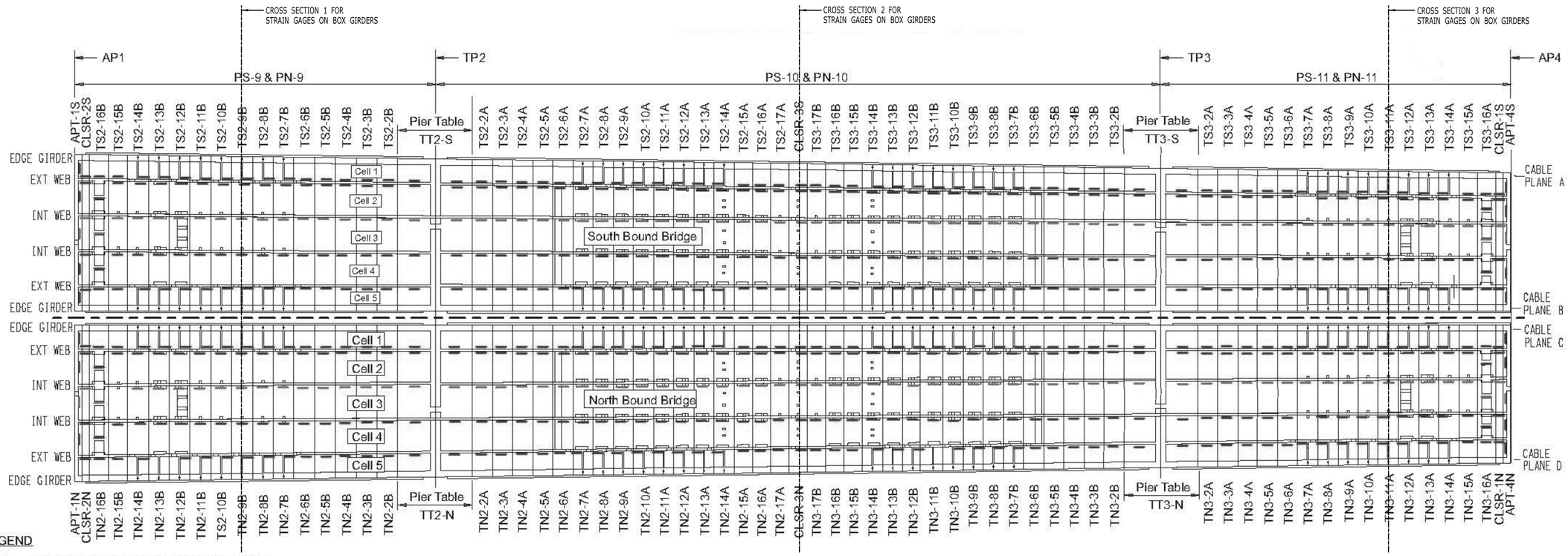

LEGEND

- Full Segment Marking (Cell 3 of NB and SB)
- Abbreviated Segment Marking (Cells 1, 2, 4 and 5 of NB and SB)

NOTES:
1. ALL STRAIN GAGES ARE ORIENTED IN THE LONGITUDINAL DIRECTION OF THE BRIDGE.
2. EXACT LOCATIONS OF STRAIN GAGES ARE TO BE DETERMINED IN THE FIELD AS DIRECTED BY THE ENGINEER.

SEGMENT KEY MARKING PLAN

SCALE: N.T.S.

LEGEND

SYMBOLS	ABBREVIATION	DESCRIPTION
●	ACC	ACCELEROMETER
◣	WND	ANEMOMETER
I	CRK	CRACKMETER
↔	DSP	DISPLACEMENT SENSOR
—	SGC	STRAIN GAGE
■	TMP	TEMPERATURE SENSOR
▲	TLT	TILTMETER
✱	SGS	STRAIN ROSETTE

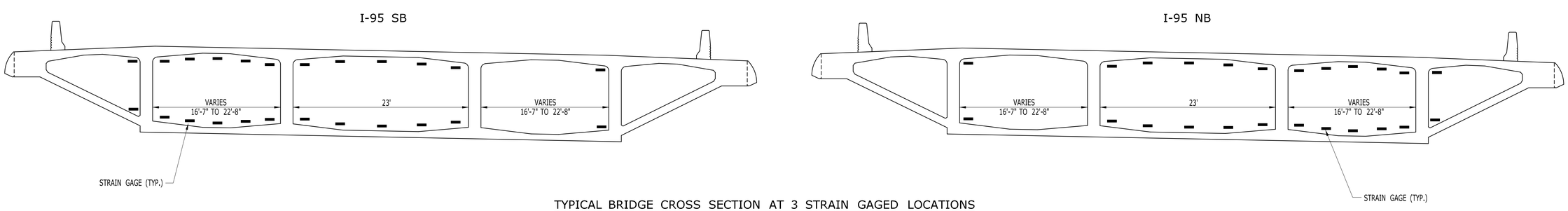

TYPICAL BRIDGE CROSS SECTION AT 3 STRAIN GAGED LOCATIONS

SCALE: N.T.S.

REV.	DATE	REVISION DESCRIPTION	SHEET NO.

Plotted Date: 10/9/2018

DESIGNER/DRAFTER:

CHECKED BY:

STATE OF CONNECTICUT
DEPARTMENT OF TRANSPORTATION

Filename: ...\HW_MSH_092-676_SMS-14.dgn

AECOM
500 ENTERPRISE DRIVE
ROCKY HILL, CT 06067

PROJECT TITLE:
STRUCTURAL MONITORING SYSTEM
PEARL HARBOR MEMORIAL BRIDGE

TOWN: NEW HAVEN

DRAWING TITLE: STRAIN GAGES ON BOX GIRDERS

PROJECT NO. 92-676

DRAWING NO. SMS-14

SHEET NO. 03.015

10/9/2018
P:\Projects\Combat\10215\092_0532\092-0676 STRUCTURAL MONITORING\HW_MSH_092-676_SMS-14.dgn

Border Version: 11/14/08

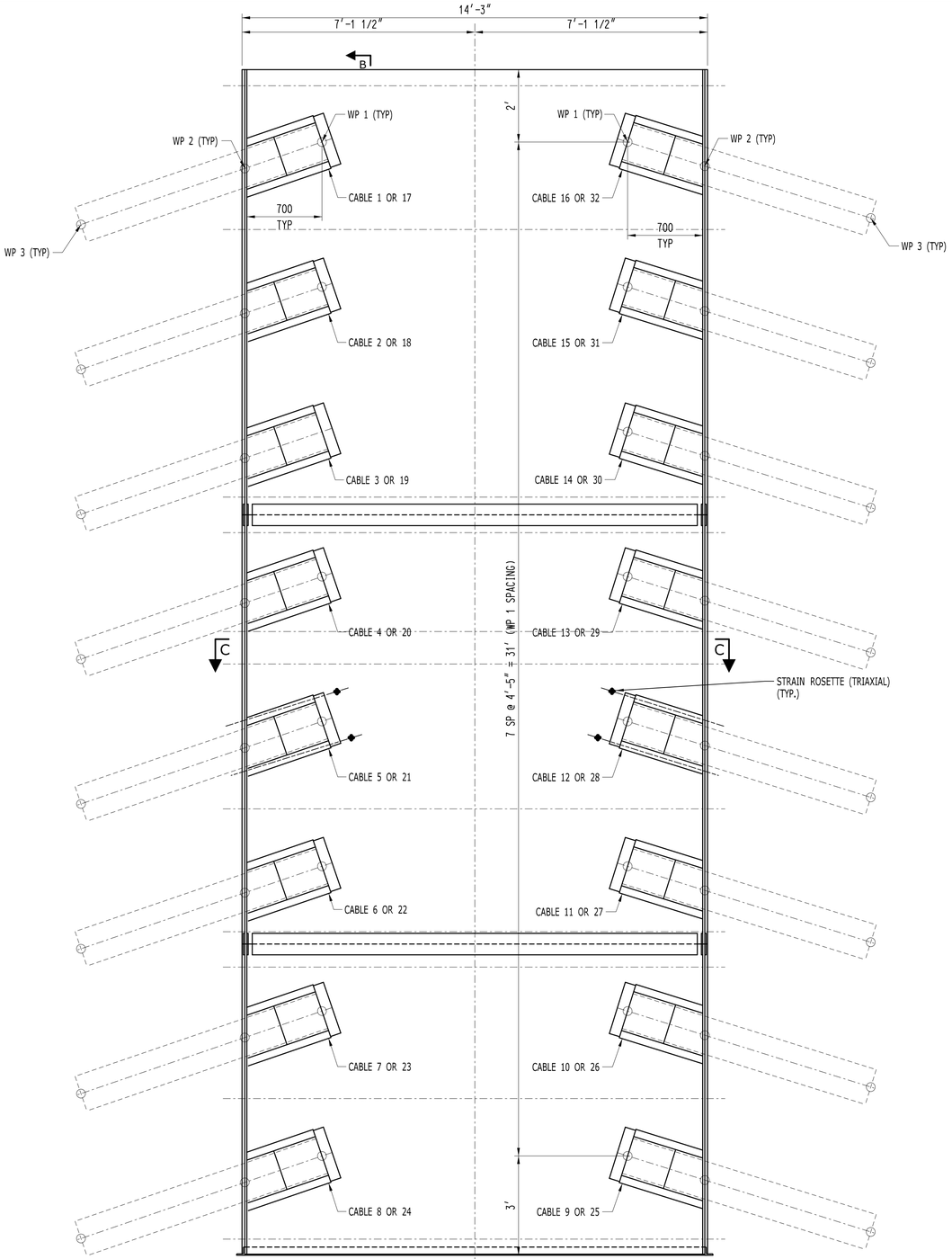

SECTION A-A

SCALE: N.T.S.

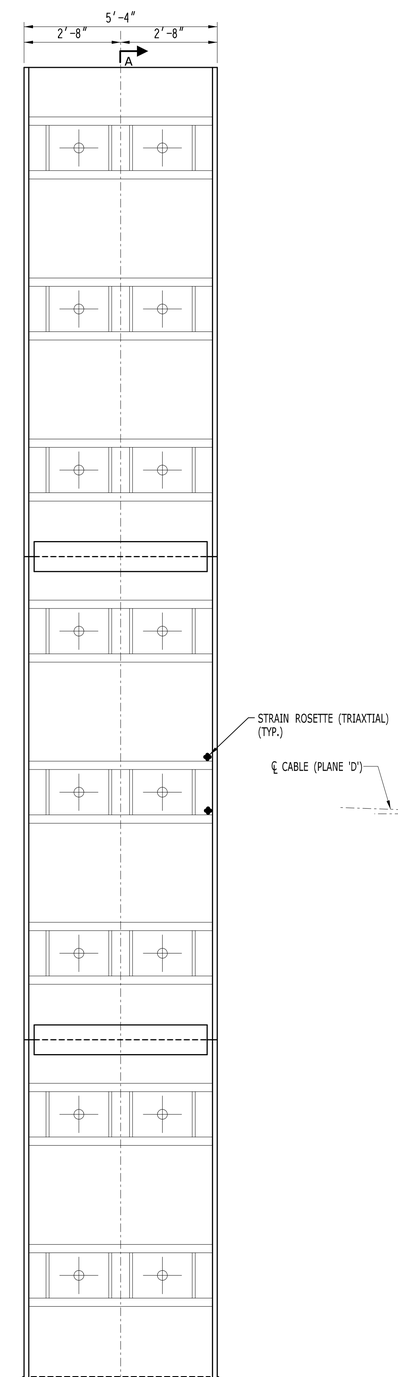

SECTION B-B

SCALE: N.T.S.

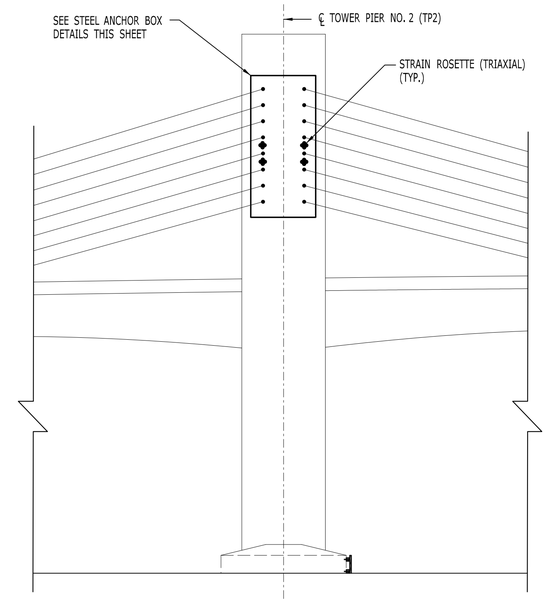

NORTHBOUND BRIDGE ELEVATION, LOOKING NORTHEAST, SOUTH TOWER LEG

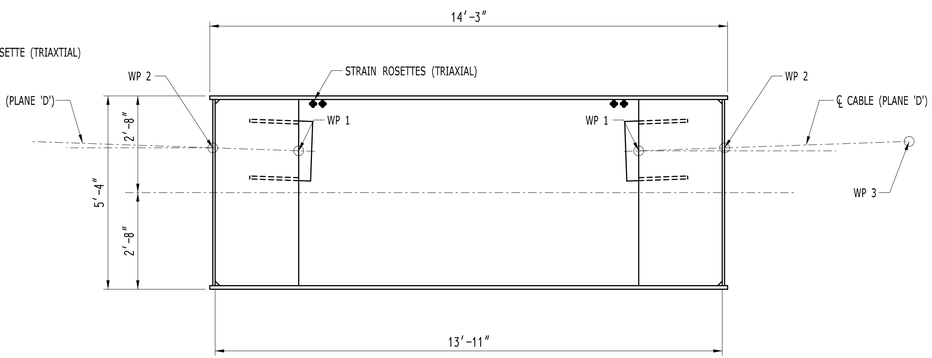

SECTION C-C (TOWER SOUTH LEG)

SCALE: N.T.S.

LEGEND

SYMBOLS	ABBREVIATION	DESCRIPTION
●	ACC	ACCELEROMETER
◣	WND	ANEMOMETER
⊥	CRK	CRACKMETER
⇔	DSP	DISPLACEMENT SENSOR
▬	SGC	STRAIN GAGE
■	TMP	TEMPERATURE SENSOR
▲	TLT	TILTMETER
✱	SGS	STRAIN ROSETTE

REV.	DATE	REVISION DESCRIPTION	SHEET NO.

Plotted Date: 10/9/2018

DESIGNER/DRAFTER:

CHECKED BY:

STATE OF CONNECTICUT
DEPARTMENT OF TRANSPORTATION

Filename: ...\HW_MSH_092-676_SMS-15.dgn

AECOM
500 ENTERPRISE DRIVE
ROCKY HILL, CT 06067

PROJECT TITLE:
STRUCTURAL MONITORING SYSTEM
PEARL HARBOR MEMORIAL BRIDGE

TOWN: NEW HAVEN

DRAWING TITLE:
STRAIN ROSETTES ON
CABLE ANCHOR BOX

PROJECT NO. 92-676

DRAWING NO. SMS-15

SHEET NO. 03.016

10/9/2018
P:\Projects\Conn0ot\102150\092_0532\092-0676_STRUCTURAL_MONITORING\HW_MSH_092-676_SMS-15.dgn

Border Version: 11/14/08

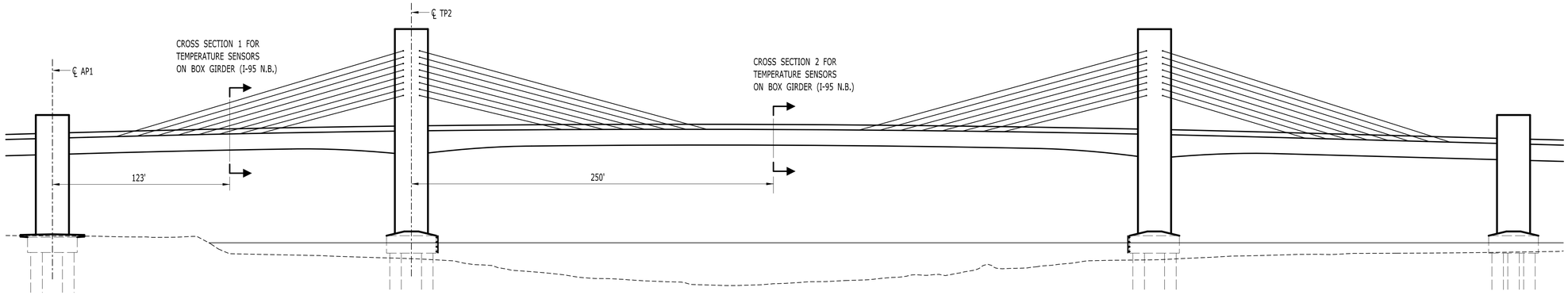

ELEVATION

SCALE: N.T.S.

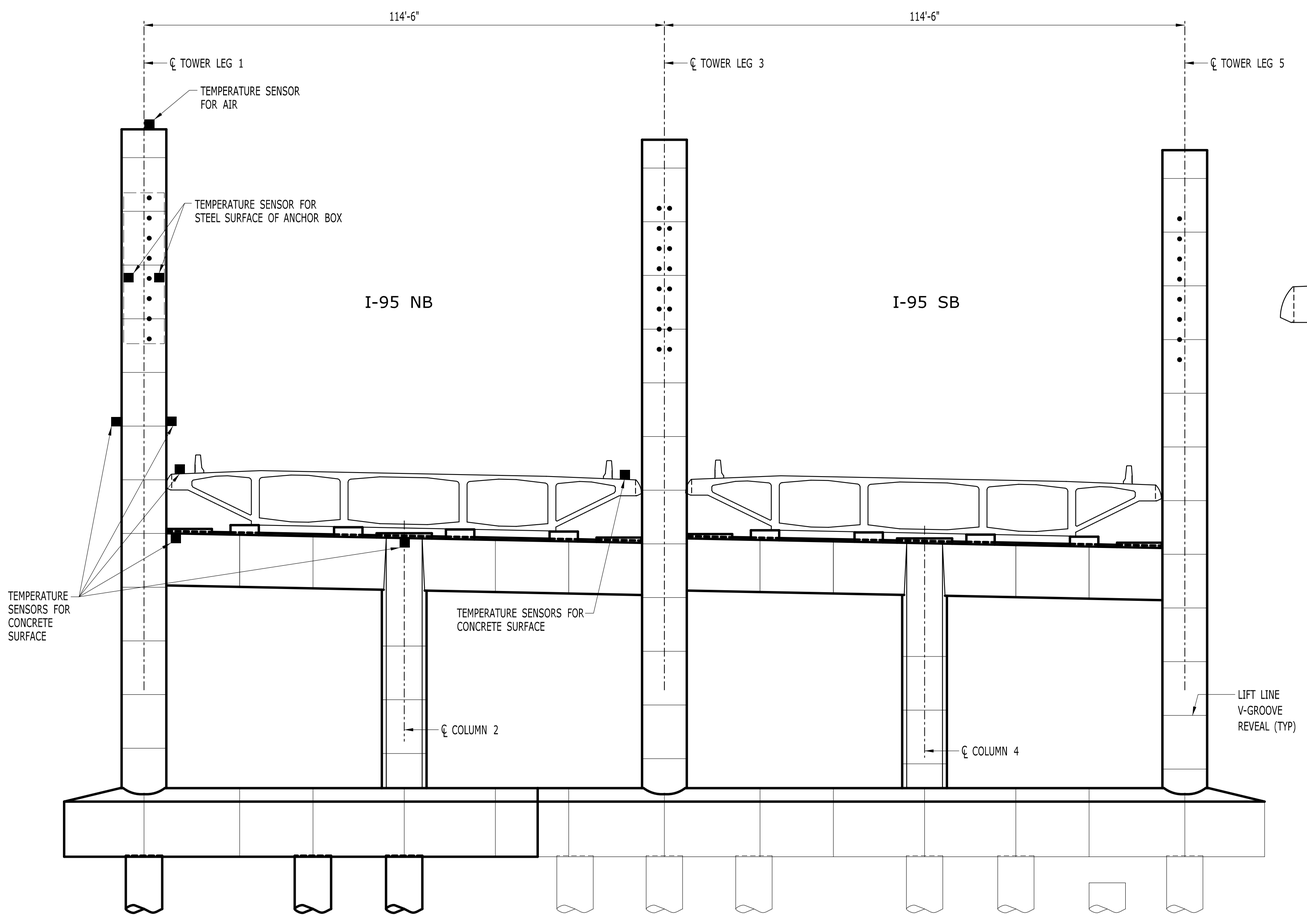

CROSS SECTION AT TP-2

SCALE: N.T.S.

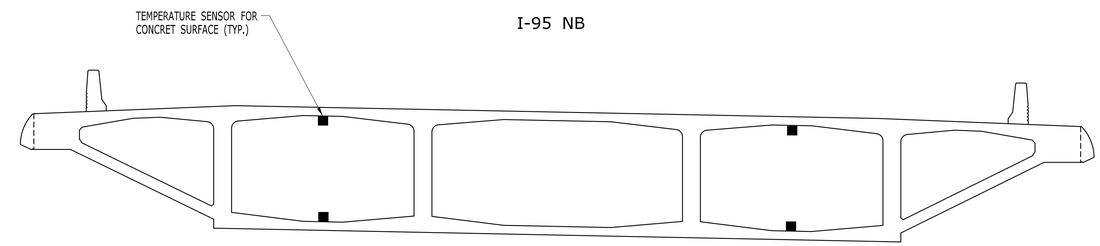

TYPICAL CROSS SECTION AT TWO LOCATIONS

SCALE: N.T.S.

LEGEND

SYMBOLS	ABBREVIATION	DESCRIPTION
●	ACC	ACCELEROMETER
◣	WND	ANEMOMETER
I	CRK	CRACKMETER
⇔	DSP	DISPLACEMENT SENSOR
▬	SGC	STRAIN GAGE
■	TMP	TEMPERATURE SENSOR
▲	TLT	TILTMETER
✱	SGS	STRAIN ROSETTE

REV.	DATE	REVISION DESCRIPTION	SHEET NO.

Plotted Date: 10/9/2018

DESIGNER/DRAFTER:

CHECKED BY:

STATE OF CONNECTICUT
DEPARTMENT OF TRANSPORTATION

Filename: ...\HW_MSH_092-676_SMS-16.dgn

AECOM
500 ENTERPRISE DRIVE
ROCKY HILL, CT 06067

PROJECT TITLE:
STRUCTURAL MONITORING SYSTEM
PEARL HARBOR MEMORIAL BRIDGE

TOWN: NEW HAVEN

DRAWING TITLE: TEMPERATURE SENSORS

PROJECT NO. 92-676

DRAWING NO. SMS-16

SHEET NO. 03.017

10/9/2018
P:\Projects\ConnDot\102150\092_0532\092-0676 STRUCTURAL MONITORING\HW_MSH_092-676_SMS-16.dgn

Border Version: 11/14/08

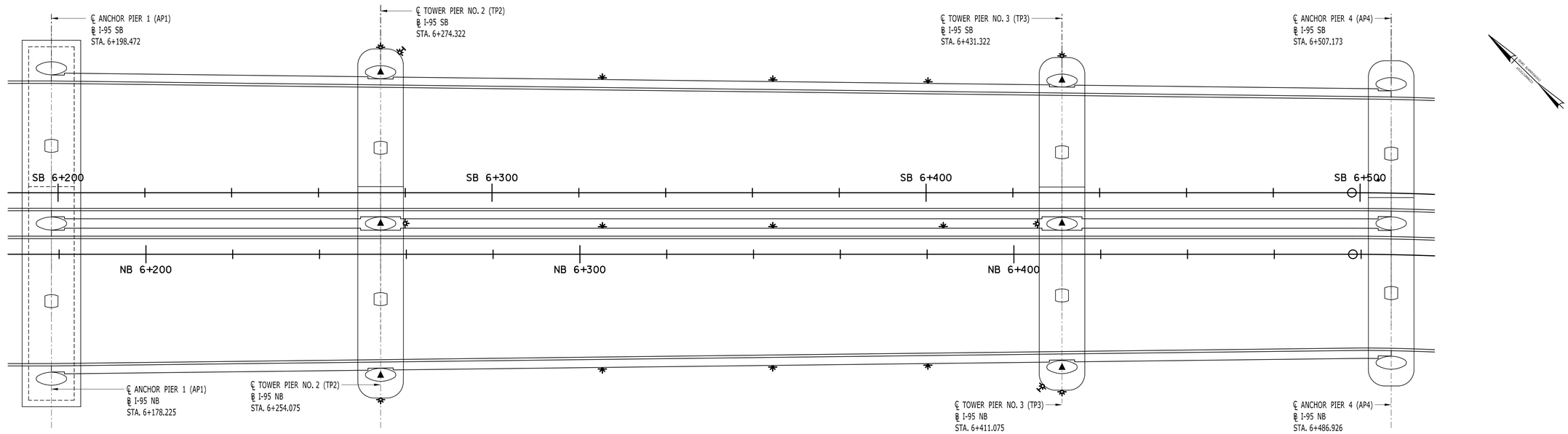

PLAN
SCALE: N.T.S.

NOTES:
1. SEE SHEET SMS-09 FOR TOWER TOP DETAILS.

LEGEND

SYMBOLS	ABBREVIATION	DESCRIPTION
●	ACC	ACCELEROMETER
◣	WND	ANEMOMETER
⊢	CRK	CRACKMETER
⇔	DSP	DISPLACEMENT SENSOR
▬	SGC	STRAIN GAGE
■	TMP	TEMPERATURE SENSOR
▲	TLT	TILTMETER
✤	SGS	STRAIN ROSETTE

REV.	DATE	REVISION DESCRIPTION	SHEET NO.

Plotted Date: 10/9/2018

DESIGNER/DRAFTER:
CHECKED BY:

STATE OF CONNECTICUT
DEPARTMENT OF TRANSPORTATION

Filename: ...\HW_MSH_092-676_SMS-17.dgn

AECOM
500 ENTERPRISE DRIVE
ROCKY HILL, CT 06067

PROJECT TITLE:
STRUCTURAL MONITORING SYSTEM
PEARL HARBOR MEMORIAL BRIDGE

TOWN: NEW HAVEN

DRAWING TITLE:
TILTMETERS AT THE TOP OF TOWERS

PROJECT NO. 92-676
DRAWING NO. SMS-17
SHEET NO. 03.018

10/9/2018
P:\Projects\CombOct\10250\092_0532\092-0676 STRUCTURAL MONITORING\HW_MSH_092-676_SMS-17.dgn

Border Version: 11/14/08

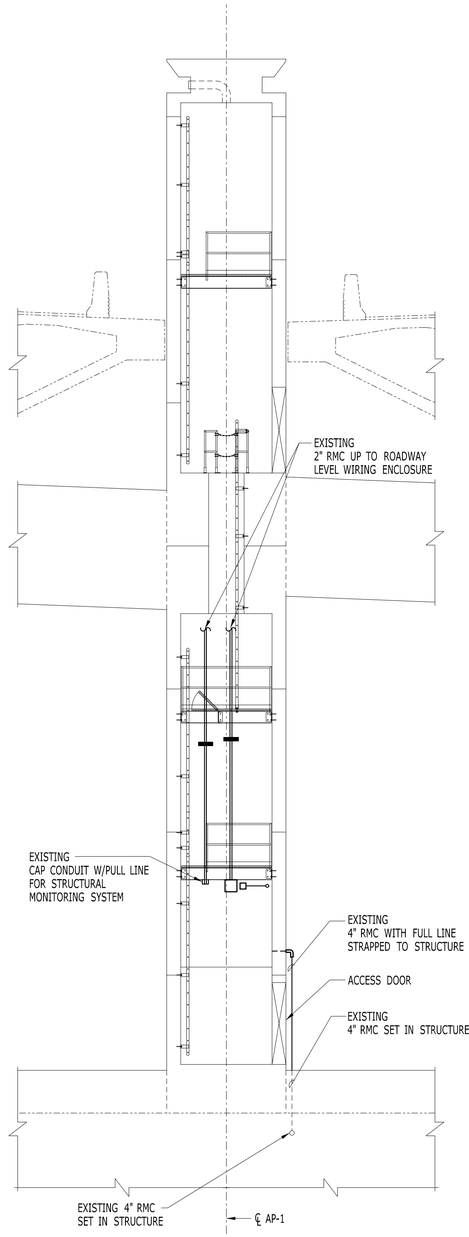

TRANSVERSE SECTION AP-1

(ANCHOR PIER 1, LEG 3 SHOWN)
SCALE: N.T.S.

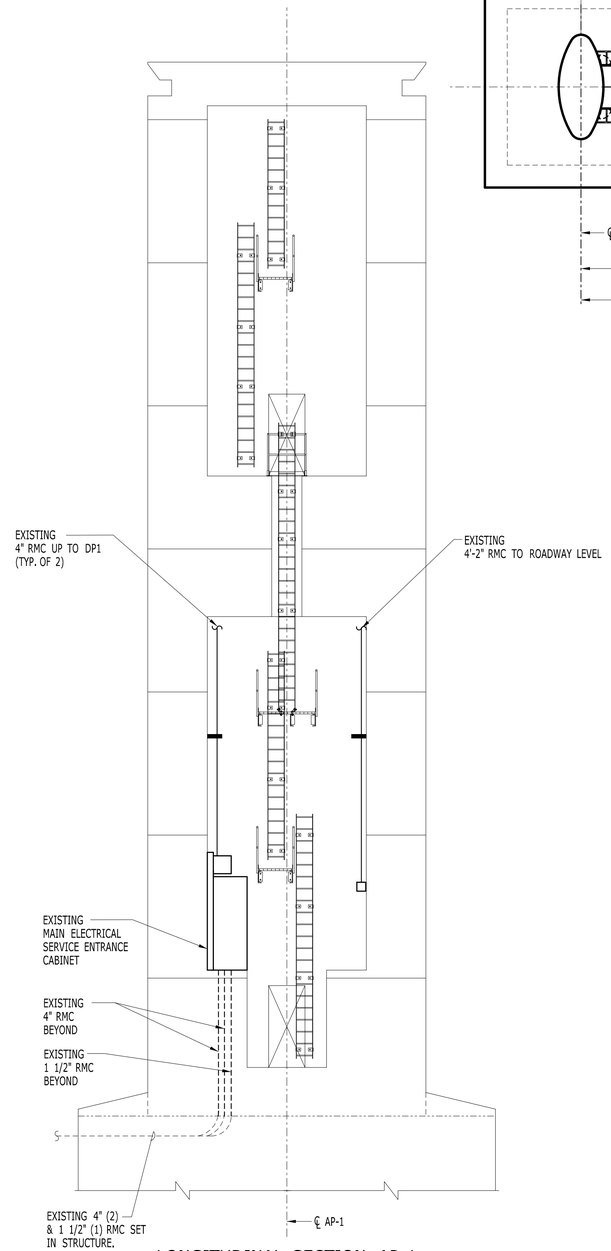

LONGITUDINAL SECTION AP-1

(ANCHOR PIER 1, LEG 3 SHOWN)
SCALE: N.T.S.

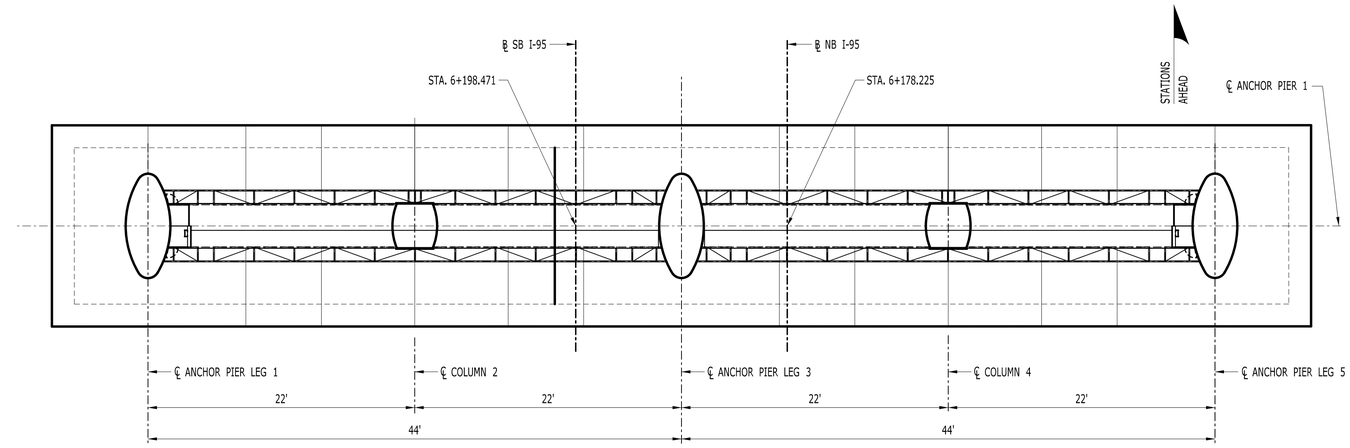

PLAN AT WALKWAY ELEVATION

SCALE: N.T.S.

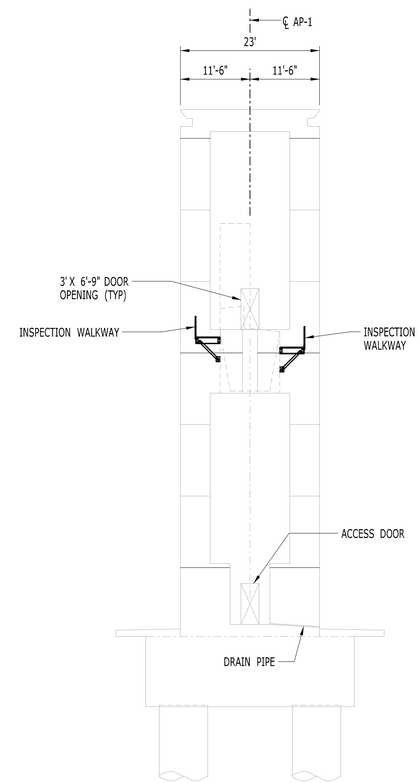

ELEVATION AP-1

SCALE: N.T.S.

REV.	DATE	REVISION DESCRIPTION	SHEET NO.

Plotted Date: 10/9/2018

DESIGNER/DRAFTER:

CHECKED BY:

STATE OF CONNECTICUT
DEPARTMENT OF TRANSPORTATION

Filename: ...\HW_MSH_092-676_SMS-18.dgn

AECOM
500 ENTERPRISE DRIVE
ROCKY HILL, CT 06067

PROJECT TITLE:
STRUCTURAL MONITORING SYSTEM
PEARL HARBOR MEMORIAL BRIDGE

TOWN: NEW HAVEN

DRAWING TITLE: ACCESS DETAILS AT ANCHOR PIER 1

PROJECT NO. 92-676

DRAWING NO. SMS-18

SHEET NO. 03.019

10/9/2018
P:\Projects\CombOut\102150\092_0532\092-0676 STRUCTURAL MONITORING\HW MSH 092-676_SMS-18.dgn

Border Version: 11/14/08

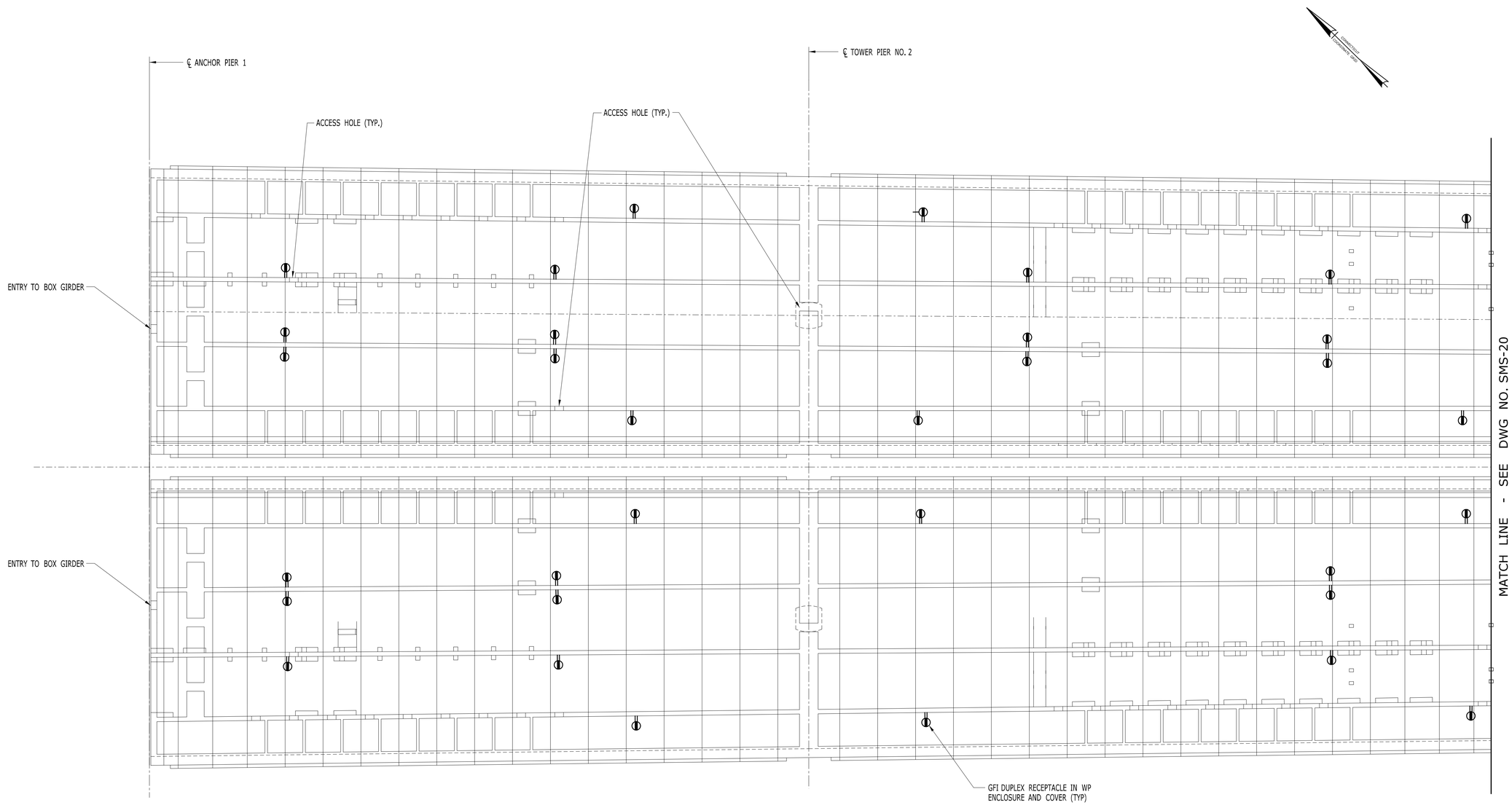

PLAN

SCALE: N.T.S.

REV.	DATE	REVISION DESCRIPTION	SHEET NO.

Plotted Date: 10/9/2018

DESIGNER/DRAFTER: G. WILLIAM

CHECKED BY: E. ZHOU

STATE OF CONNECTICUT
DEPARTMENT OF TRANSPORTATION

Filename: ...\HW_MSH_092-676_SMS-19.dgn

AECOM
500 ENTERPRISE DRIVE
ROCKY HILL, CT 06067

PROJECT TITLE:
STRUCTURAL MONITORING SYSTEM
PEARL HARBOR MEMORIAL BRIDGE

TOWN: NEW HAVEN

DRAWING TITLE:
ACCESS DETAILS AND AC POWER AVAILABILITY IN BOX GIRDERS (1 OF 2)

PROJECT NO. 92-676

DRAWING NO. SMS-19

SHEET NO. 03.020

10/9/2018
P:\Projects\CombOut\102150\092_0532\092-0676 STRUCTURAL MONITORING\HW_MSH_092-676_SMS-19.dgn

Border Version: 11/14/08

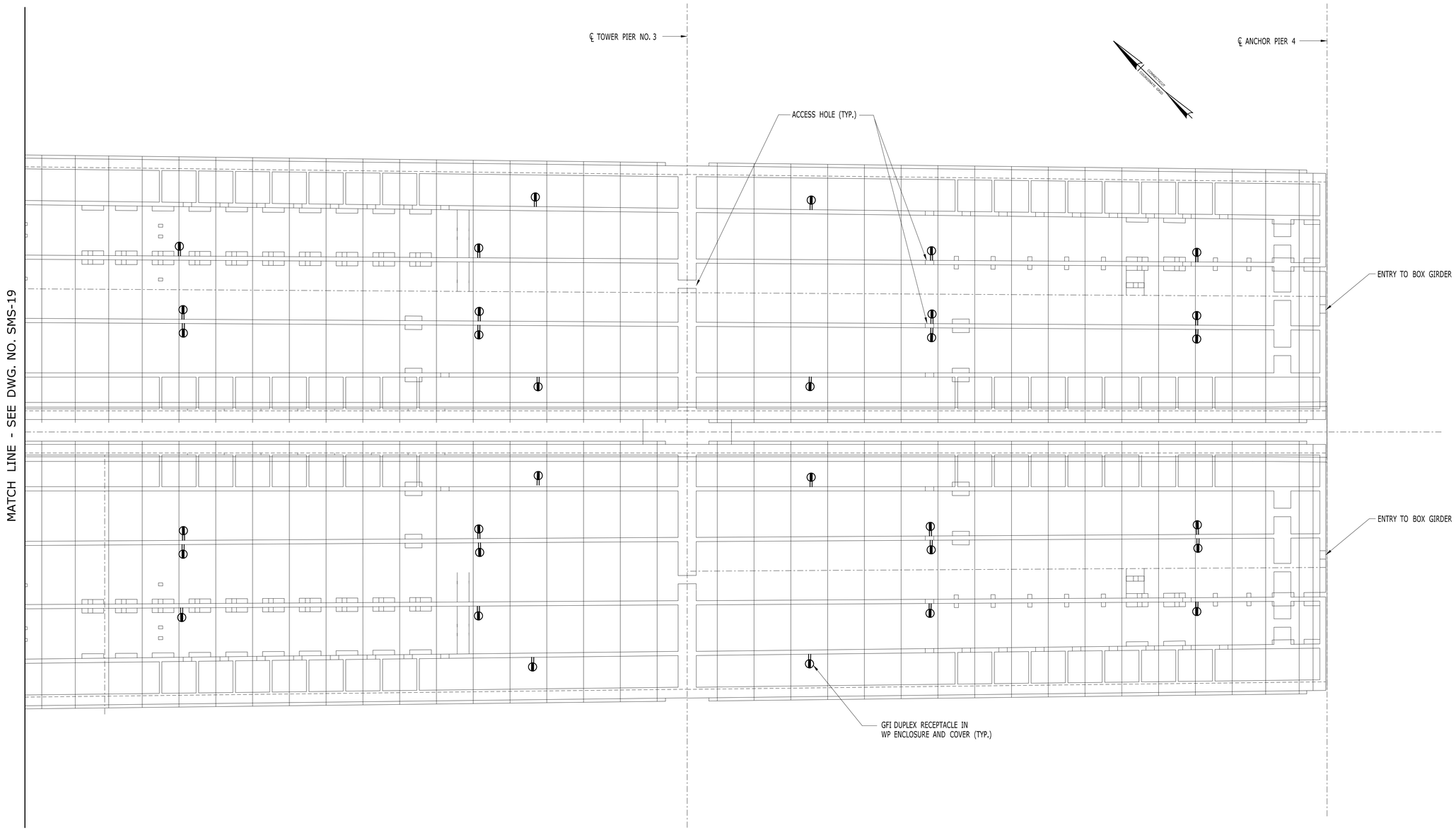

PLAN

SCALE: N.T.S.

REV.	DATE	REVISION DESCRIPTION	SHEET NO.

Plotted Date: 10/9/2018

DESIGNER/DRAFTER: G. WILLIAM

CHECKED BY: E. ZHOU

STATE OF CONNECTICUT
DEPARTMENT OF TRANSPORTATION

Filename: ...\HW_MSH_092-676_SMS-20.dgn

AECOM
500 ENTERPRISE DRIVE
ROCKY HILL, CT 06067

PROJECT TITLE:
STRUCTURAL MONITORING SYSTEM
PEARL HARBOR MEMORIAL BRIDGE

TOWN: NEW HAVEN

DRAWING TITLE:
ACCESS DETAILS AND AC POWER AVAILABILITY IN BOX GIRDERS (2 OF 2)

PROJECT NO. 92-676

DRAWING NO. SMS-20

SHEET NO. 03.021

10/9/2018
P:\Projects\Combat\10215\092_0532\092-0676 STRUCTURAL MONITORING\HW MSH 092-676 SMS-20.dgn

Border Version: 11/14/08

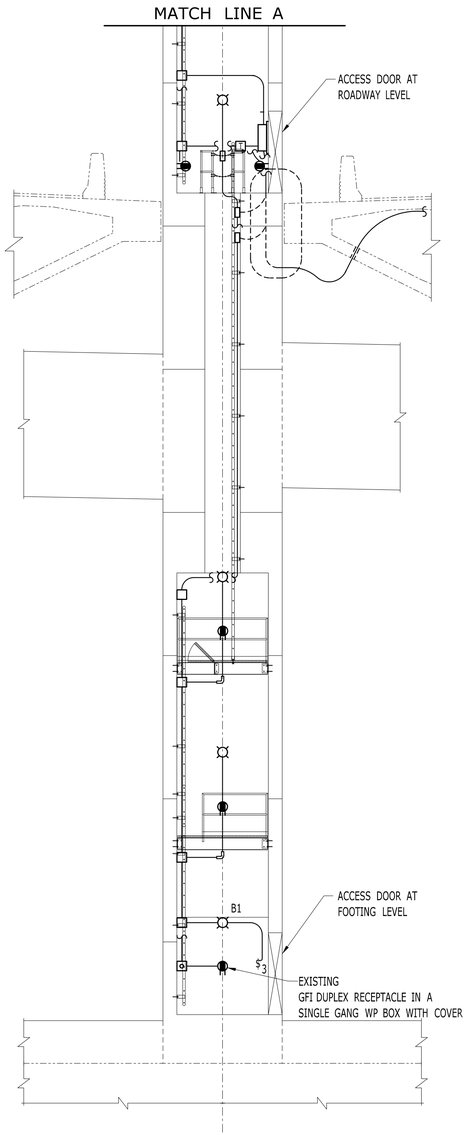

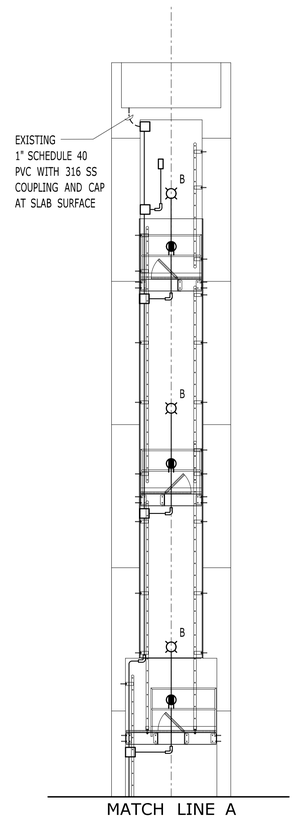

TRANSVERSE SECTION THRU TOWER

(TOWER 2 CENTER LEG SHOWN, OTHERS SIMILAR)

SCALE: N.T.S.

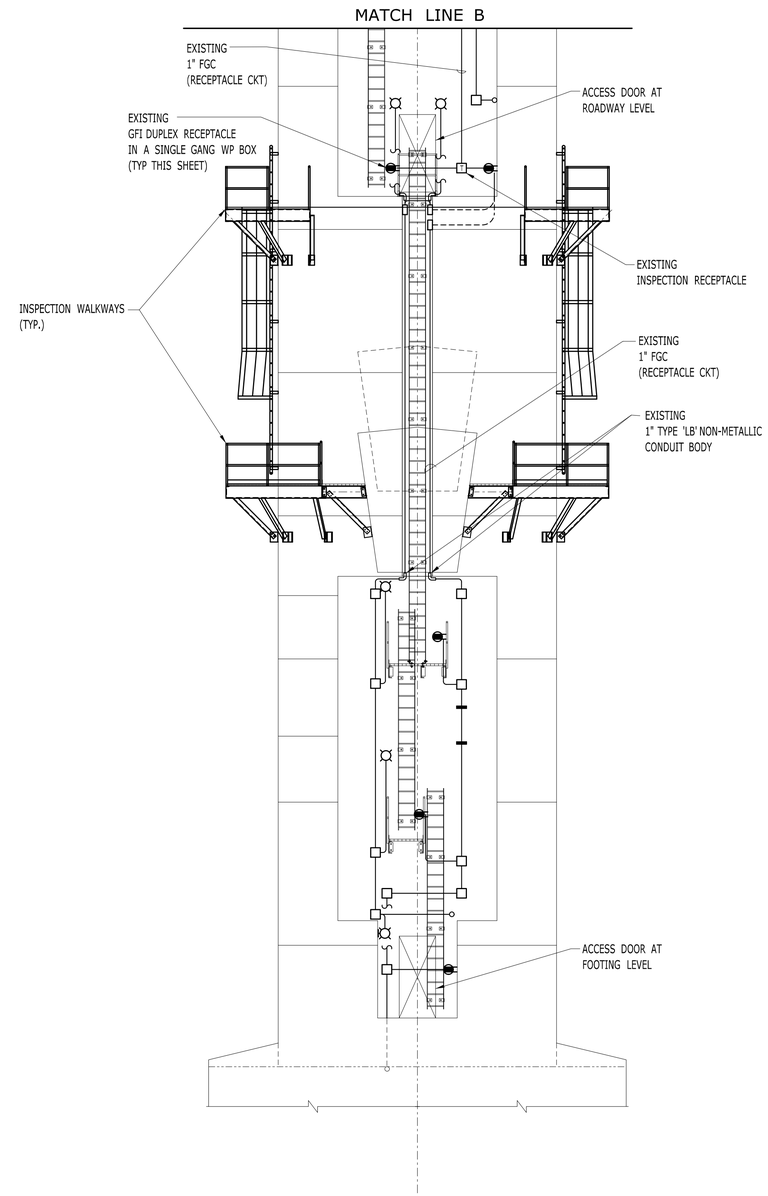

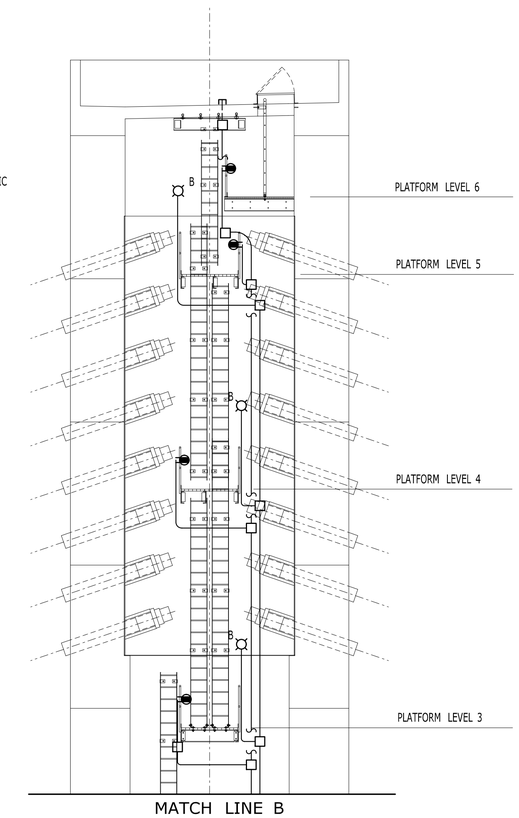

LONGITUDINAL SECTION THRU TOWER

(TOWER 2 CENTER LEG SHOWN, OTHERS SIMILAR)

SCALE: N.T.S.

REV.	DATE	REVISION DESCRIPTION	SHEET NO.

Plotted Date: 10/9/2018

DESIGNER/DRAFTER: G. WILLIAM

CHECKED BY: E. ZHOU

STATE OF CONNECTICUT
DEPARTMENT OF TRANSPORTATION

Filename: ...\HW_MSH_092-676_SMS-21.dgn

AECOM
500 ENTERPRISE DRIVE
ROCKY HILL, CT 06067

PROJECT TITLE:
STRUCTURAL MONITORING SYSTEM
PEARL HARBOR MEMORIAL BRIDGE

TOWN: NEW HAVEN

DRAWING TITLE:
ACCESS DETAILS AND AC POWER AVAILABILITY AT TOWER PIER 2 (1 OF 3)

PROJECT NO. 92-676

DRAWING NO. SMS-21

SHEET NO. 03.022

10/9/2018
P:\Projects\ConnDot\102150\092_0532\092-0676_STRUCTURAL MONITORING\HW_MSH_092-676_SMS-21.dgn

Border Version: 11/14/08

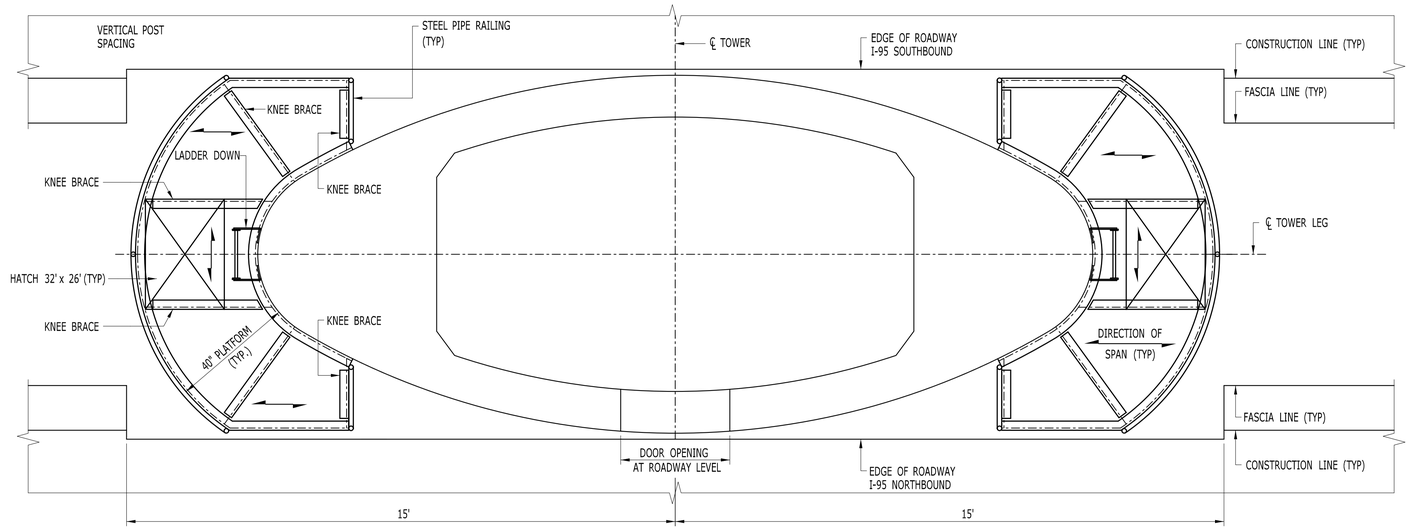

PLAN - EXTERIOR PLATFORM LEVEL L-2

SCALE: N.T.S.

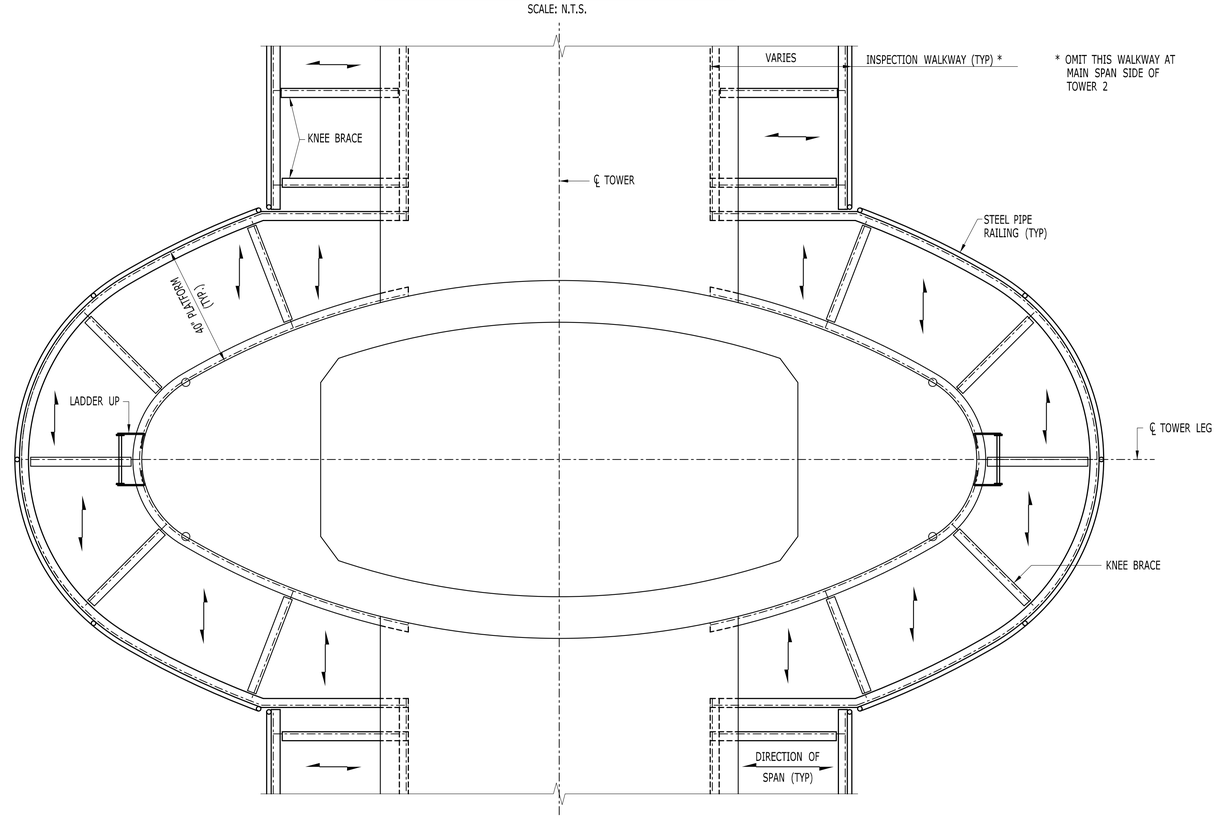

PLAN - EXTERIOR PLATFORM LEVEL L-1

SCALE: N.T.S.

REV.	DATE	REVISION DESCRIPTION	SHEET NO.

Plotted Date: 10/9/2018

DESIGNER/DRAFTER:

CHECKED BY:

STATE OF CONNECTICUT
DEPARTMENT OF TRANSPORTATION

Filename: ...\HW_MSH_092-676_SMS-22.dgn

AECOM
500 ENTERPRISE DRIVE
ROCKY HILL, CT 06067

PROJECT TITLE:

STRUCTURAL MONITORING SYSTEM
PEARL HARBOR MEMORIAL BRIDGE

TOWN:

NEW HAVEN

DRAWING TITLE:

ACCESS DETAILS AND AC POWER AVAILABILITY AT TOWER PIER 2 (2 OF 3)

PROJECT NO. 92-676

DRAWING NO. SMS-22

SHEET NO. 03.023

10/9/2018
P:\Projects\Combat\1102150\092_0532\092-0676 STRUCTURAL MONITORING\HW_MSH_092-676_SMS-22.dgn

Border Version: 11/14/08

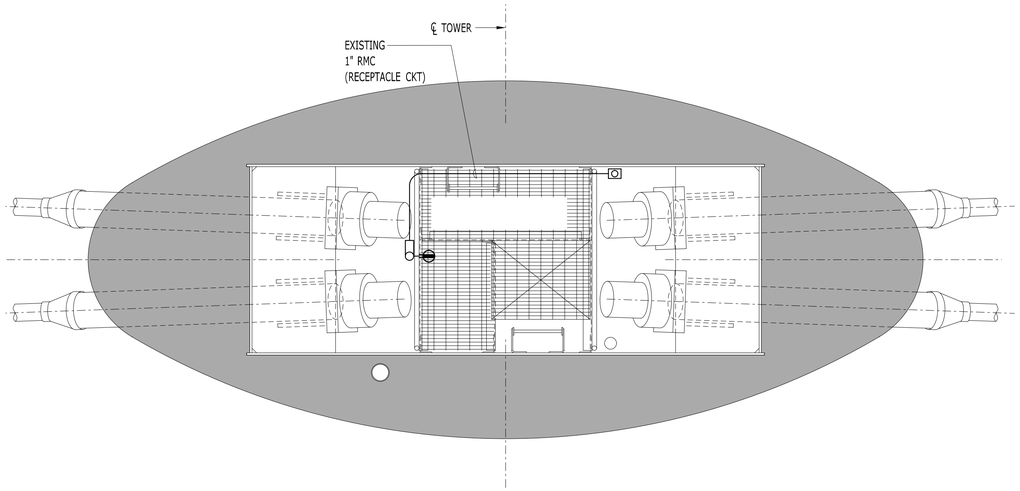

PLATFORM LEVEL 4

SCALE: N.T.S.

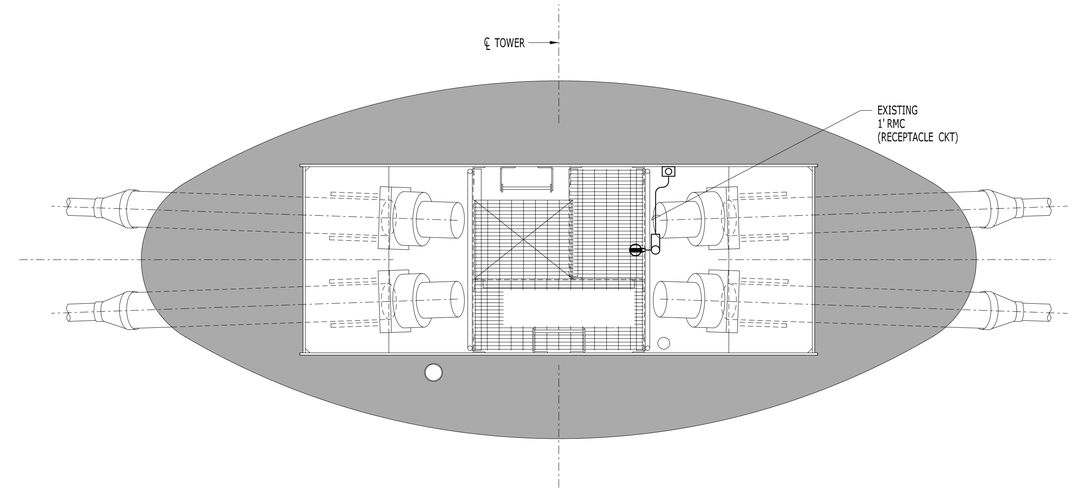

PLATFORM LEVEL 5

SCALE: N.T.S.

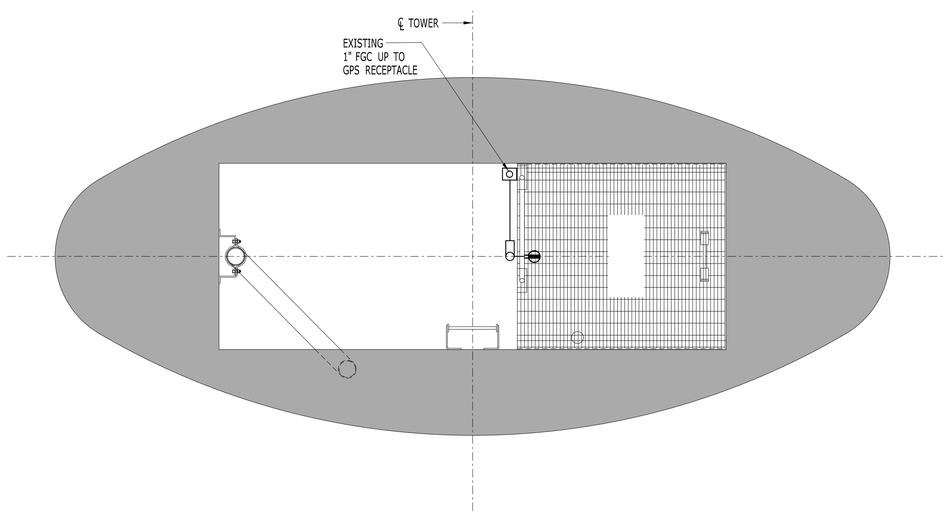

PLATFORM LEVEL 6

SCALE: N.T.S.

REV.	DATE	REVISION DESCRIPTION	SHEET NO.

Plotted Date: 10/9/2018

DESIGNER/DRAFTER: G. WILLIAM

CHECKED BY: E. ZHOU

STATE OF CONNECTICUT
DEPARTMENT OF TRANSPORTATION

Filename: ...\HW_MSH_092-676_SMS-23.dgn

AECOM
500 ENTERPRISE DRIVE
ROCKY HILL, CT 06067

PROJECT TITLE:
STRUCTURAL MONITORING SYSTEM
PEARL HARBOR MEMORIAL BRIDGE

TOWN: NEW HAVEN

DRAWING TITLE:
ACCESS DETAILS AND AC POWER AVAILABILITY AT TOWER PIER 2 (3 OF 3)

PROJECT NO. 92-676

DRAWING NO. SMS-23

SHEET NO. 03.024

10/9/2018
P:\Projects\CombOct\1021501\092_0532\092-0676 STRUCTURAL MONITORING\HW_MSH_092-676_SMS-23.dgn

Border Version: 11/14/08