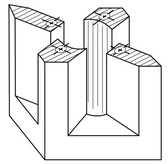

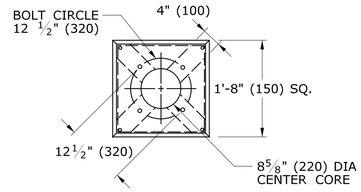

PICTORIAL
SECTION A-A

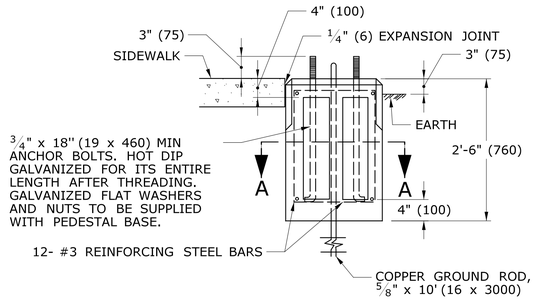

TRAFFIC CONTROL FOUNDATION
PEDESTAL - TYPE I - PRECAST

NOTES:

PLACE NO. 6 CRUSHED STONE IN CENTER OPENING AFTER CONDUITS AND GROUND ROD HAVE BEEN INSTALLED.

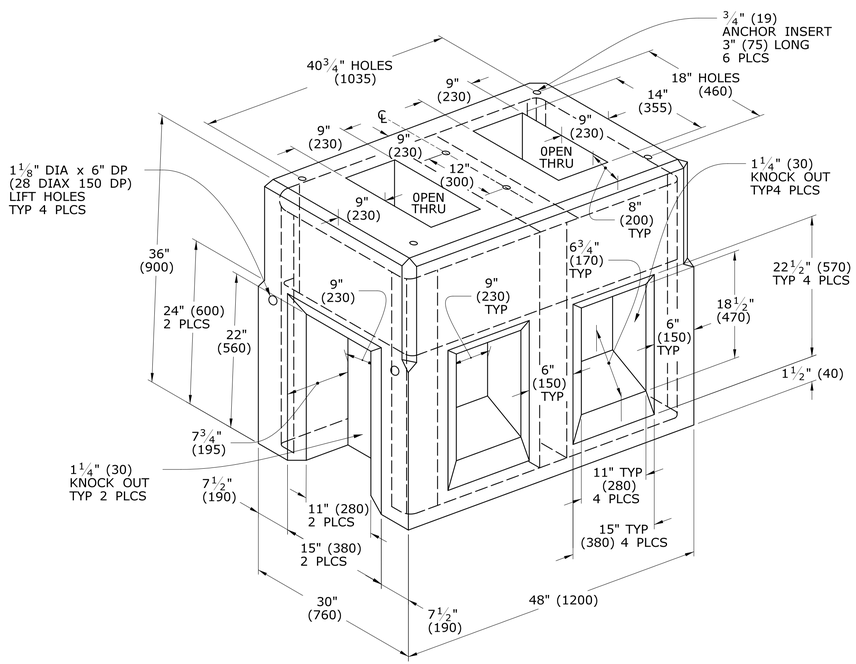

TRAFFIC CONTROL FOUNDATION
CONTROLLER - TYPE IV - PRECAST

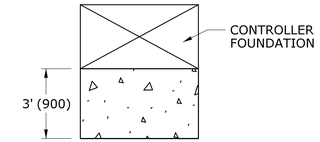

INSTALL PRECAST OR CAST IN PLACE CONCRETE SIDEWALK ON CABINET DOOR SIDE OF CONTROLLER FOUNDATION.

PITCH SIDEWALK 1/4" PER FOOT (20 PER METER) AWAY FROM THE CONTROLLER FOUNDATION.

REFER TO HIGHWAY STANDARD SHEET HW-921_01 FOR SIDEWALK CONSTRUCTION.

TYPICAL CONCRETE SIDEWALK
AT CONTROLLER FOUNDATION

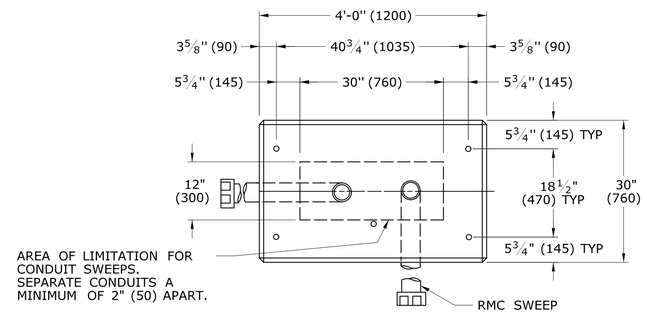

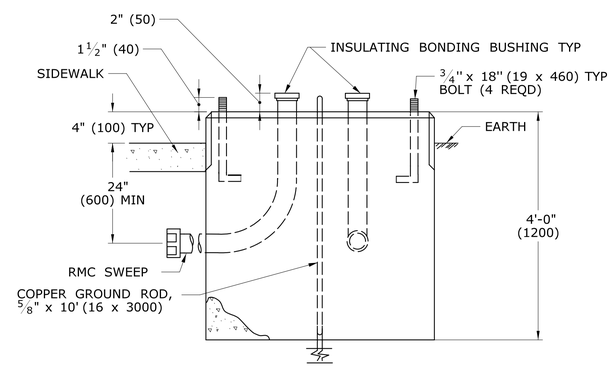

TRAFFIC CONTROL FOUNDATION
CONTROLLER - TYPE IV - CAST IN PLACE

NOTES:

INSTALL FOUNDATION ON 6" (150) OF COMPACTED GRAVEL IN ACCORDANCE WITH SECTION 2.14.
LEVEL FOUNDATION WITH A PROJECTION OF 4" (100) ABOVE FINISHED GRADE.
INSTALL COPPER GROUND ROD: 5/8" x 10 (16 x 3000).
PLACE NO. 6 CRUSHED STONE IN THE CENTER OPENINGS AFTER THE CONDUITS AND GROUND ROD HAVE BEEN INSTALLED. THE OPENINGS SHALL BE CAPPED WITH A 2" (50) GROUT LEVEL WITH THE TOP OF THE FOUNDATION AND NEATLY FINISHED. THE GROUT SHALL CONFORM WITH THE REQUIREMENTS OF ARTICLE M.3.01-12.
CONCRETE: CLASS "A" CONFORMING TO ARTICLE M.03.01.
#4 REBAR 2" (50) MIN COVER AROUND ALL OPENINGS, 3-#4 REBARS IN EACH CORNER.
CONDUITS SHALL NOT PROJECT MORE THAN 2" (50) ABOVE FOUNDATION.

LEGEND AS SHOWN ON TRAFFIC CONTROL SIGNAL PLAN:
- PROPOSED CONTROLLER
- EXISTING CONTROLLER
- PROPOSED STEEL SPAN POLE
- EXISTING STEEL SPAN POLE

REV.	DATE	REVISION DESCRIPTION
2	1-2014	REMOVED SPAN POLE FOUNDATION DETAILS, REVISED TYPICAL CONCRETE SIDEWALK AT CONTROLLER FOUNDATION.
1	4-2012	MINOR REVISIONS.

THE INFORMATION, INCLUDING ESTIMATED QUANTITIES OF WORK, SHOWN ON THESE SHEETS IS BASED ON LIMITED INVESTIGATIONS BY THE STATE AND IS IN NO WAY WARRANTED TO INDICATE THE CONDITIONS OF ACTUAL QUANTITIES OF WORK WHICH WILL BE REQUIRED.

Plotted Date: 1/7/2014

DIMENSIONS ARE IN ENGLISH ('.") & METRIC UNITS (mm).
METRIC DIMENSIONS ARE ROUNDED:
- OVER 1" TO NEAREST 5 mm
- UNDER 1" TO NEAREST 1 mm.

NOT TO SCALE

STATE OF CONNECTICUT
DEPARTMENT OF TRANSPORTATION

Filename: CTDOT_TRAFFIC_STD.DGN Model: TR-1002_01

SUBMITTED BY: NAME/DATE/TIME: Tracy L. Fogarty 2014.01.07 16:12:06-05'00'
APPROVED BY: NAME/DATE/TIME: Charles S. Harlow 2014.01.08 09:02:54-05'00'

CTDOT
STANDARD SHEET

OFFICE OF ENGINEERING

STANDARD SHEET TITLE:
TRAFFIC CONTROL FOUNDATIONS

STANDARD SHEET NO.:
TR-1002_01