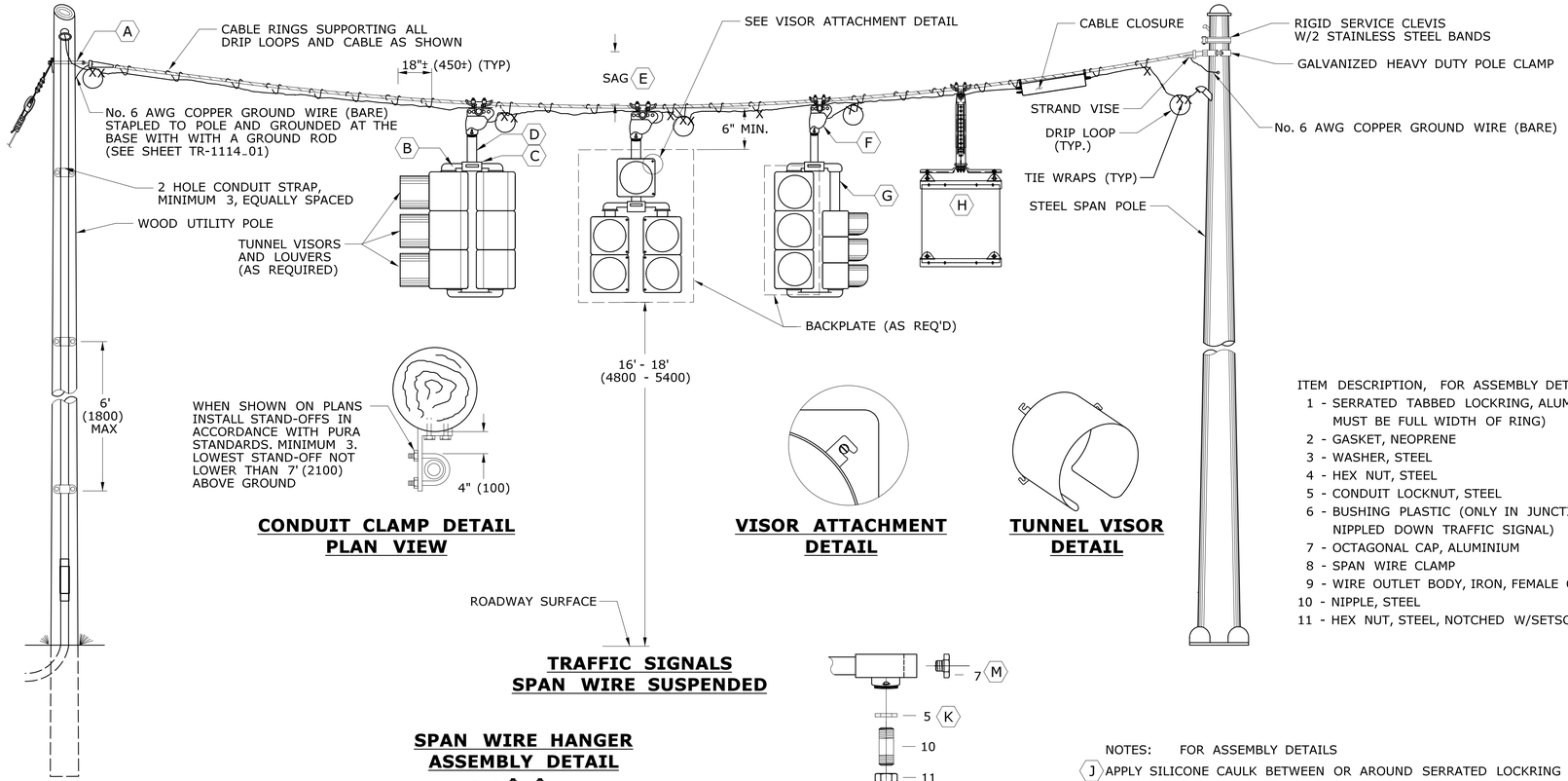

TRAFFIC SIGNALS SPAN WIRE SUSPENDED

CONDUIT CLAMP DETAIL PLAN VIEW

VISOR ATTACHMENT DETAIL

TUNNEL VISOR DETAIL

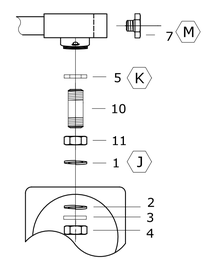

TWO WAY, THREE WAY & FOUR WAY NIPPLE DOWN ASSEMBLY DETAIL

SPAN WIRE HANGER ASSEMBLY DETAIL

UPPER CENTER SUPPORT DETAIL

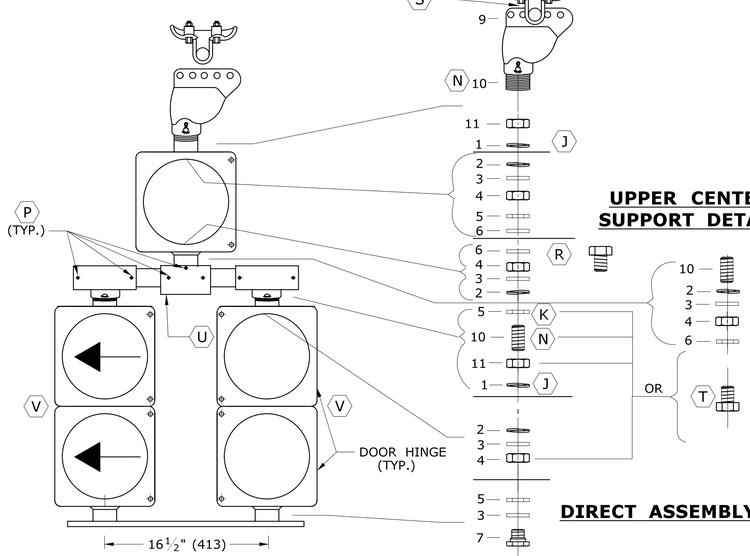

DIRECT ASSEMBLY DETAIL

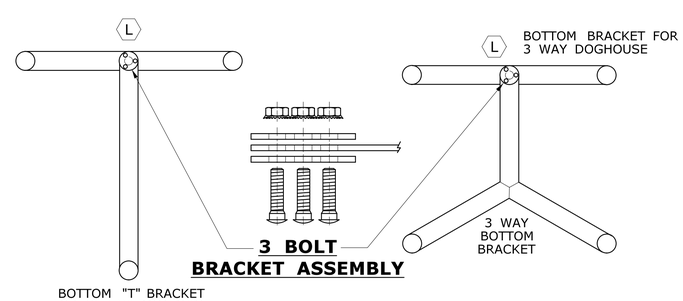

3 BOLT BRACKET ASSEMBLY

ITEM DESCRIPTION, FOR ASSEMBLY DETAILS
1 - SERRATED TABBED LOCKRING, ALUMINUM (TAB MUST BE FULL WIDTH OF RING)
2 - GASKET, NEOPRENE
3 - WASHER, STEEL
4 - HEX NUT, STEEL
5 - CONDUIT LOCKNUT, STEEL
6 - BUSHING PLASTIC (ONLY IN JUNCTION BOX OR NIPPLED DOWN TRAFFIC SIGNAL)
7 - OCTAGONAL CAP, ALUMINIUM
8 - SPAN WIRE CLAMP
9 - WIRE OUTLET BODY, IRON, FEMALE ONLY
10 - NIPPLE, STEEL
11 - HEX NUT, STEEL, NOTCHED W/SETSCREWS

NOTES: FOR ASSEMBLY DETAILS
J APPLY SILICONE CAULK BETWEEN OR AROUND SERRATED LOCKRING AND HOUSING.
K OPTIONAL USE IF NIPPLE THREADS TOO FAR INTO ELBOW.
L DRILL HOLE IN CENTER OF 2 WAY BOTTOM BRACKET - INSTALL 3 BOLT BRACKET (SEE DETAIL).
M DO NOT INSERT ORNAMENTAL CAP PAST DOTTED LINE.
N ALL THREAD.
P SETSCREW (SQUARE OR ALLEN) ON ALL FITTINGS.
R CHASE NIPPLE CAN BE SUBSTITUTED FOR THE COMBINATION OF ITEMS 6, 5 AND 10.
S INSTALL STAINLESS STEEL WASHER ON INSIDE OF COTTER PIN. COTTER PIN AND WASHER SHALL BE ON SIDE OF HANGER AWAY FROM SIGNAL CABLES.
T CHASE NIPPLE CAN BE SUBSTITUTED FOR COMBINATION 4, 5, 10 AND 11.
U CENTER HUB SAME AS C EXCEPT TOP OPENING MAY BE THREADED.
V DOOR HINGE ON OUTSIDE OF SIDE BY SIDE ASSEMBLY.

TRAFFIC SIGNAL CABLE COLOR ASSIGNMENTS

SIGNAL ASSEMBLY & CABLE USED	SIGNAL FUNCTION	ARTERY 1	ARTERY 2	SIDE STREET 1	SIDE STREET 2
2 - WAY 9 CONDUCTOR	RED	RED		BLACK	
	YELLOW	ORANGE		WHITE \ BLACK	
	GREEN	GREEN		BLUE	
	SPARE	GREEN\BLACK		RED \ BLACK	
	NEUTRAL	WHITE			
3 - WAY 12 CONDUCTOR	RED	RED	RED \ BLACK	BLACK	
	YELLOW	ORANGE	ORANGE \ BLACK	WHITE \ BLACK	
	GREEN	GREEN	GREEN \ BLACK	BLUE	
	SPARE	BLUE\BLACK	BLACK \ WHITE		
	NEUTRAL	WHITE			
4 - WAY 15 CONDUCTOR	RED	RED	RED \ BLACK	BLACK	RED \ WHITE
	YELLOW	ORANGE	ORANGE \ BLACK	WHITE \ BLACK	BLACK \ WHITE
	GREEN	GREEN	GREEN \ BLACK	BLUE	GREEN \ WHITE
	SPARE	BLUE\BLACK		BLUE \ WHITE	
	NEUTRAL	WHITE			

PEDESTRIAN SIGNAL CABLE COLOR ASSIGNMENTS

SIGNAL ASSEMBLY & CABLE USED	SIGNAL FUNCTION	WIRE COLOR
WALK SIGNAL W/ PUSHBUTTON 7 CONDUCTOR	DON'T WALK	RED
	WALK	GREEN
	NEUTRAL FOR WALK SIGNAL	WHITE
	PEDESTRIAN PUSHBUTTON	BLACK
	NEUTRAL FOR PUSHBUTTON	ORANGE
	SPARE CONDUCTOR	WHITE \ BLACK
	SPARE CONDUCTOR *	BLUE \ BLACK
WALK SIGNAL W/ PUSHBUTTON 7 CONDUCTOR	RED	RED
	YELLOW	ORANGE
	GREEN	GREEN
	NEUTRAL FOR TRAFFIC SIGNAL	WHITE
	PEDESTRIAN PUSHBUTTON	BLACK
	NEUTRAL FOR PUSHBUTTON	WHITE \ BLACK
	SPARE CONDUCTOR *	BLUE \ BLACK

* IF 14/7 FEEDS MORE THAN ONE BUTTON, SPLIT THE BUTTONS AND USE BLUE WITH BLACK TRACER FOR THE ADDITIONAL BUTTON.

TABLE NOTES:
1. INSTALL SEPARATE CABLE BETWEEN CLOSURE AND EACH TRAFFIC SIGNAL ASSEMBLY. WIRE EACH TRAFFIC SIGNAL SECTION SEPARATELY BACK TO CABLE CLOSURE. JUMPERS BETWEEN TERMINALS ARE NOT ALLOWED EXCEPT ON NEUTRAL CONDUCTORS.
2. WIRE ALL SIGNALS, SAME DIRECTION FROM CONTROLLER, SEPARATELY WITH CONDUCTORS IN 21 CONDUCTOR CABLE, EVEN IF INDICATIONS ARE IDENTICAL.
3. CABLES THAT FEED PEDESTRIAN INDICATIONS, PUSH BUTTONS, AND DETECTORS BYPASS CABLE CLOSURE.
4. REFER TO STANDARD SHEET TR-1113_01 FOR CABLE CLOSURE - TYPE A.

NOTES:
SERVICE CONDUCTORS: THW, THWN OR XHHW. INDIVIDUAL WIRES MAY BE USED IN LIEU OF MULTI-CONDUCTOR CABLE.
ALL WORK ON UTILITY POLES MUST COMPLY WITH CURRENT PURA REGULATIONS AND NESC RULES.
A ATTACH SPAN AT LEAST 12" (300) BELOW LOWEST POWER COMPANY ATTACHMENT, AND AT LEAST 40" (1000) ABOVE HIGHEST COMMUNICATIONS ATTACHMENT, UNLESS OTHERWISE DIRECTED ON PLANS.
B ELBOW OR "T" FITTING MUST HAVE NOTCH FOR SERRATED TABBED LOCKRING.
C TOP BRACKET CENTER HUB SHALL BE MIN 4" (100) ROUND AND 3" (75) DEEP OR EQUAL VOLUME. SERRATION CAST IN HUB OR TABBED OR SERRATED LOCKRING, TOP OPENING NOT THREADED.
D NIPPLE LENGTH DEPENDS ON SPAN HEIGHT.
E SAG OF SPAN TO BE 5%± LENGTH, UNLESS OTHERWISE ALLOWED BY ENGINEER.
F FACE ALL ENTRANCE FITTINGS TOWARD CABLE CLOSURE.
G INSTALL EXTENSION NIPPLE ON TOP OF SIGNAL HOUSING SO BOTTOM OF ALL SIGNALS ARE EVEN.
H REFER TO TR-GS_01 "SIGN FACE SHEET ALUMINUM, R-SERIES SIGNS TYPICAL DETAILS", AND TO TR-1114_01 FOR SIGN HANGER ASSEMBLY. MAXIMUM SIGN SIZE 36" X 36" (900 X 900). ALL STAINLESS STEEL HARDWARE.
SECURE LOUVERS TO TUNNEL VISORS WITH 3 STAINLESS STEEL SCREWS.

LEGEND AS SHOWN ON TRAFFIC CONTROL SIGNAL PLAN:
PROPOSED WOOD SPAN POLE
EXISTING WOOD SPAN POLE
PROPOSED STEEL SPAN POLE
EXISTING STEEL SPAN POLE
PROPOSED UTILITY POLE
EXISTING UTILITY POLE
POLE ANCHOR & GUY
CABLE CLOSURE
SPAN MOUNTED SIGN
SPAN MOUNTED TRAFFIC SIGNAL

REV.	DATE	REVISION DESCRIPTION
4	1-2018	REVISED GROUNDING NOTE FOR SPAN AND OTHER MINOR REVISIONS.
3	3-2015	REMOVED STRAIN INSULATOR.
2	5-2013	MINOR REVISIONS.
1	4-2012	MINOR REVISIONS.

THE INFORMATION, INCLUDING ESTIMATED QUANTITIES OF WORK, SHOWN ON THESE SHEETS IS BASED ON LIMITED INVESTIGATIONS BY THE STATE AND IS IN NO WAY WARRANTED TO INDICATE THE CONDITIONS OF ACTUAL QUANTITIES OF WORK WHICH WILL BE REQUIRED.

Plotted Date: 5/22/2018

DIMENSIONS ARE IN ENGLISH (.") & METRIC UNITS (mm).
METRIC DIMENSIONS ARE ROUNDED:
- OVER 1" TO NEAREST 5 mm
- UNDER 1" TO NEAREST 1 mm.

NOT TO SCALE

STATE OF CONNECTICUT
DEPARTMENT OF TRANSPORTATION

Filename: CTDOT_TRAFFIC_STD_2018-05-21.dgn Model: TR-1105_01

SUBMITTED BY: NAME/DATE/TIME:
APPROVED BY: NAME/DATE/TIME:

CTDOT STANDARD SHEET
OFFICE OF ENGINEERING

STANDARD SHEET TITLE:
TRAFFIC SIGNALS & CABLE ASSIGNMENTS

STANDARD SHEET NO.:
TR-1105_01