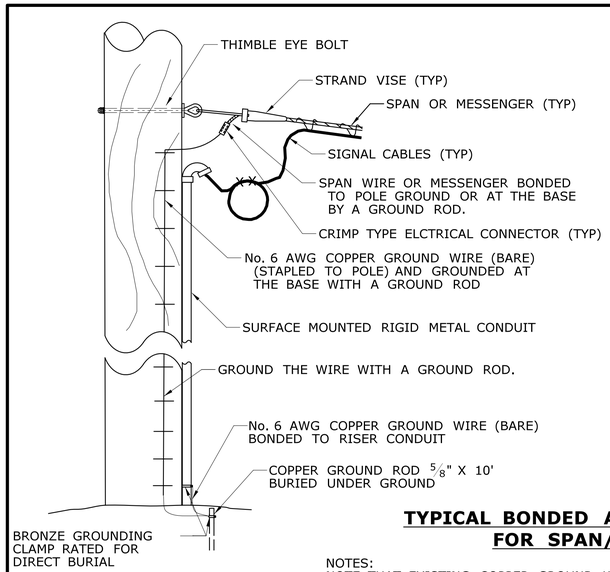

WOOD UTILITY POLE

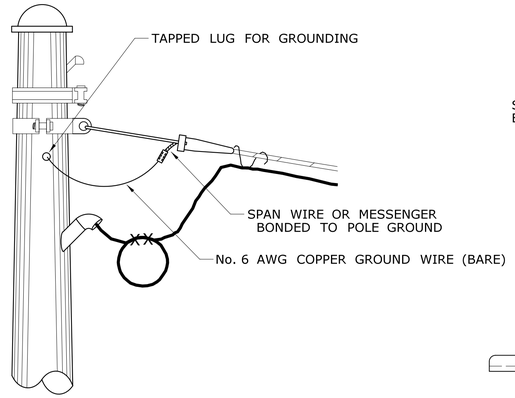

STEEL POLE

TYPICAL BONDED ATTACHMENT DETAIL FOR SPAN/MESSENGER

NOTES:
NOTE THAT EXISTING COPPER GROUND WIRE MAY BE USED IF AVAILABLE.
ALL ATTACHMENTS REQUIRE BONDING.

THE WOOD UTILITY POLE DETAIL APPLIES TO INSTALLATIONS OF GROUND RODS IN SOIL, SIDEWALK, PAVEMENT. THE TOP SURFACE SHALL BE REPLACED IN KIND AFTER THE GROUND ROD INSTALLATION. WEHN ROCK BOTTOM IS ENCOUNTERED, REFER TO NEC 250.53G FOR INSTALLATION REQUIREMENTS.

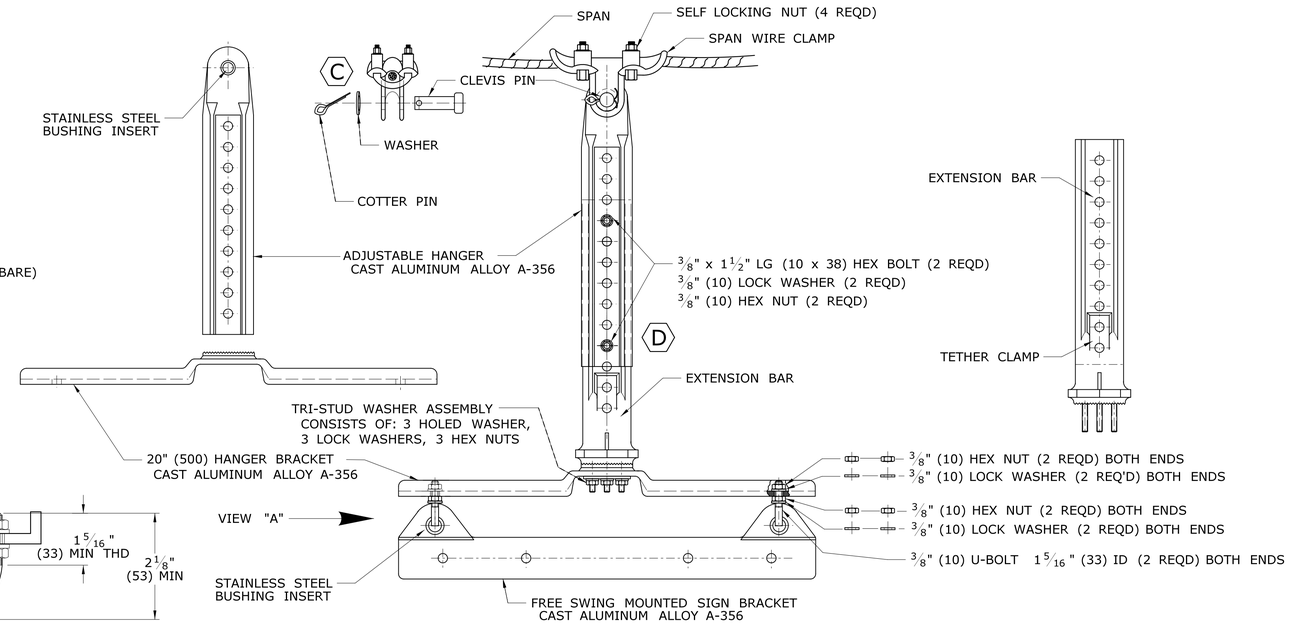

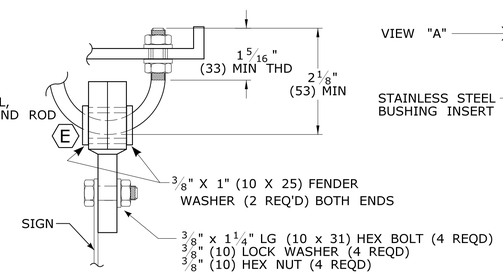

VIEW "A"
END VIEW

FREE SWINGING SPAN MOUNTED SIGN HANGER ASSEMBLY

NOTES:

ALL STAINLESS STEEL HARDWARE: BOLTS, NUTS, WASHERS, CLEVIS PIN, COTTER PIN, ETC.

(C) INSTALL CLEVIS PIN SO THAT THE WASHER AND COTTER PIN ARE ON SIDE OF HANGER AWAY FROM SIGNAL CABLES.

(D) OVERLAP MAXIMUM NUMBER OF HOLES SEAT SNUGGLY ON EXTENSION BAR. LEAVE BOTTOM HOLE OPEN FOR TETHER CLAMP.

(E) INSTALL FENDER WASHER ON U-BOLT, ON BOTH ENDS, ON BOTH SIDES OF SIGN BRACKET.

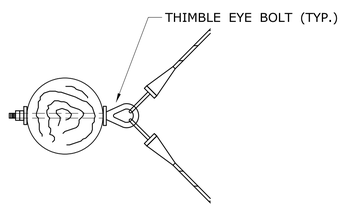

TYPICAL SINGLE ATTACHMENT WITH DOUBLE PULL-OFF

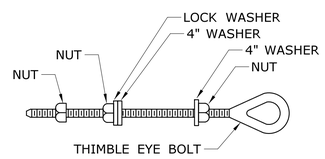

THIMBLE EYE BOLT
SUPPLIED BY THE CONTRACTOR.

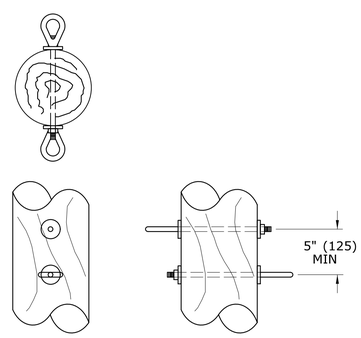

SAME PLANE

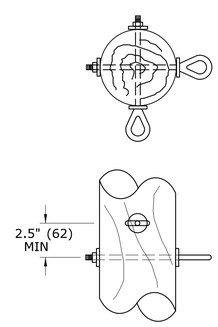

PERPENDICULAR

TYPICAL DOUBLE ATTACHMENT DETAIL ON WOOD POLE

NOTE:
METHOD OF ATTACHMENT TO BE DETERMINED BY POLE CUSTODIAN.

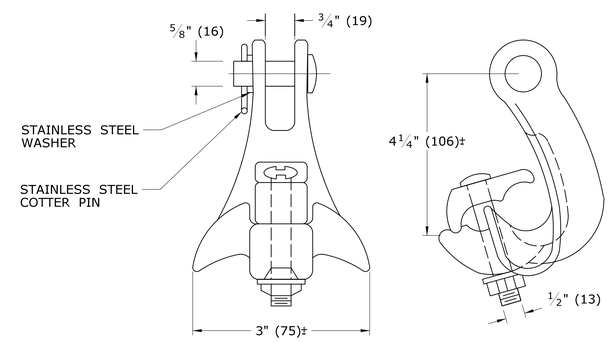

TANGENT "Y" SPAN CLAMP DETAIL

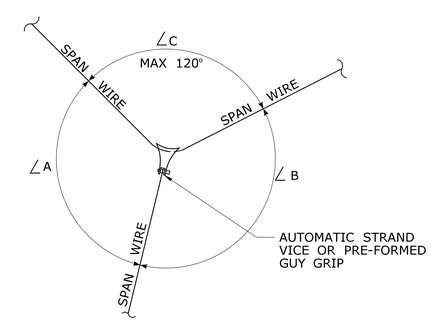

CLAMP ORIENTATION DETAIL

NOTES:
MINIMUM 11,000 LBS. (10.7 kN) BREAKING STRENGTH.
CLAMP SMALLEST ANGLE OF Y CONNECTION.
∠A ≈ ∠B SO PULL-OFF BISECTS ∠C.

LEGEND AS SHOWN ON TRAFFIC CONTROL SIGNAL PLAN:
SPAN MOUNTED SIGN

REV.	DATE	REVISION DESCRIPTION
4	1-2018	REVISED WOOD POLE GROUNDING DETAILS, ADDED GROUND ROD
3	3-2015	REVISED SPAN WIRE TO WOOD POLE DETAILS, ADDED BONDING ATTACHMENT DETAILS, REMOVED ANCHOR & SIGN HANGER DETAILS.
2	4-2014	ADDED SIGNAL "Y" SPAN ATTACHMENT DETAIL.
1	4-2012	INCLUDED SIGN HANGER BOLTS, REMOVED AUDIBLE PED. SIGNAL & RENUMBERED STANDARD SHEET (FROM TR-1107_02).

THE INFORMATION, INCLUDING ESTIMATED QUANTITIES OF WORK, SHOWN ON THESE SHEETS IS BASED ON LIMITED INVESTIGATIONS BY THE STATE AND IS IN NO WAY WARRANTED TO INDICATE THE CONDITIONS OF ACTUAL QUANTITIES OF WORK WHICH WILL BE REQUIRED.

Plotted Date: 8/10/2018

DIMENSIONS ARE IN ENGLISH (.") & METRIC UNITS (mm).
METRIC DIMENSIONS ARE ROUNDED:
- OVER 1" TO NEAREST 5 mm
- UNDER 1" TO NEAREST 1 mm.

NOT TO SCALE

STATE OF CONNECTICUT
DEPARTMENT OF TRANSPORTATION

Filename: CTDOT_TRAFFIC_STD_2018-01-25.dgn Model: TR-1114_01

SUBMITTED BY: NAME/DATE/TIME:
APPROVED BY: NAME/DATE/TIME:

CTDOT STANDARD SHEET
OFFICE OF ENGINEERING

STANDARD SHEET TITLE:
BONDING AND UTILITY POLE ATTACHMENT DETAILS, SIGN HANGER, "Y" CLAMP DETAIL

STANDARD SHEET NO.:
TR-1114_01