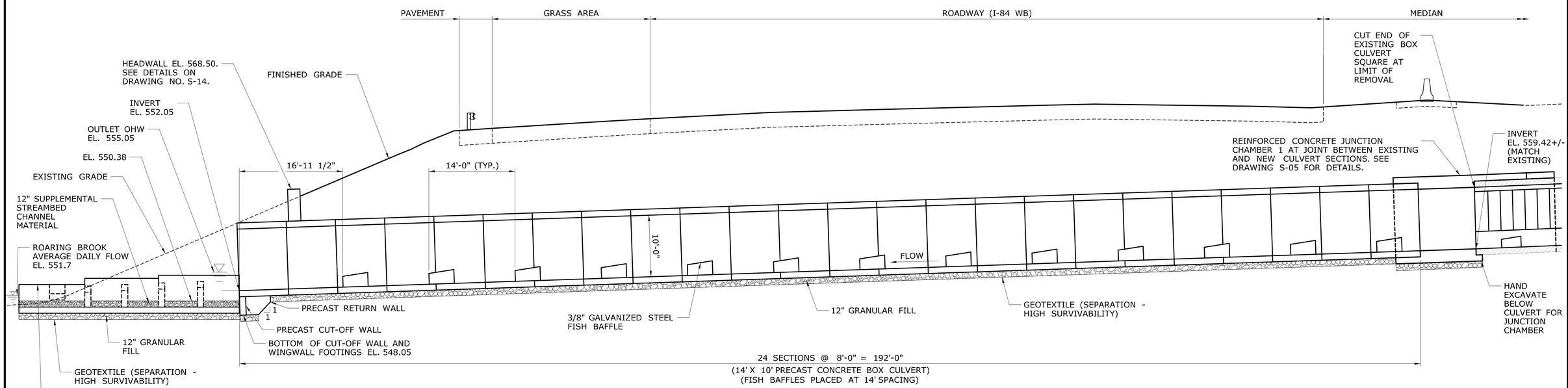

LONGITUDINAL SECTION (WEST PORTION)

SCALE: 1/8" = 1'-0"

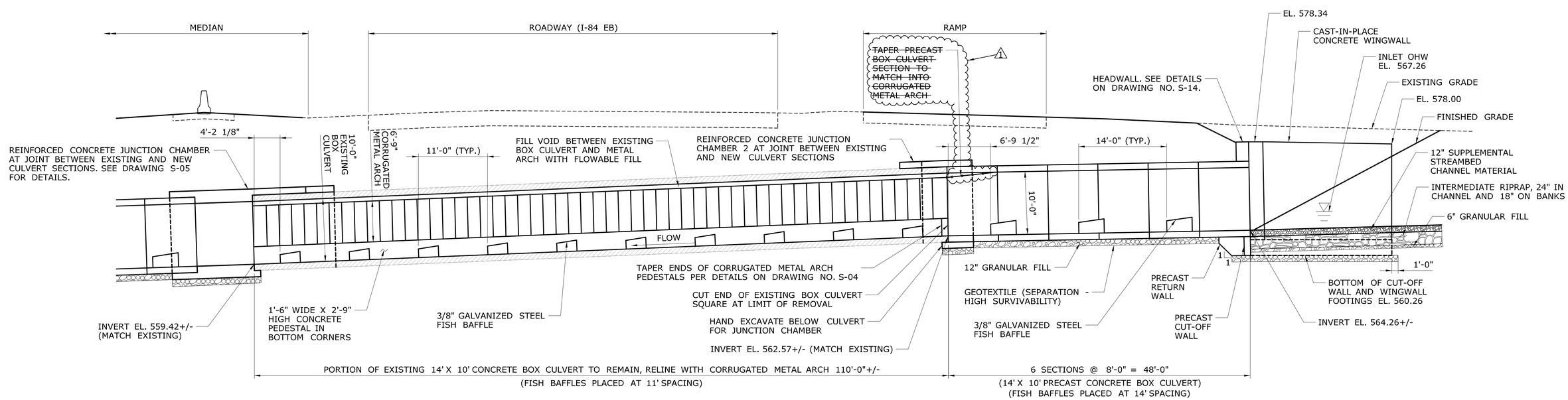

LONGITUDINAL SECTION (EAST PORTION)

SCALE: 1/8" = 1'-0"

ADDENDUM NO. 1

REV.	DATE	REVISION DESCRIPTION	SHEET NO.
-	-	-	-
-	-	-	-
-	-	-	-
-	-	-	-
-	-	-	-
1	05.01.19	REMOVED TAPERED TOP AND WALLS NOTE	05.03.A1

THE INFORMATION, INCLUDING ESTIMATED QUANTITIES OF WORK, SHOWN ON THESE SHEETS IS BASED ON LIMITED INVESTIGATIONS BY THE STATE AND IS IN NO WAY WARRANTED TO INDICATE THE CONDITIONS OF ACTUAL QUANTITIES OF WORK WHICH WILL BE REQUIRED.

Plotted Date: 5/2/2019

DESIGNER/DRAFTER: **PAL**

CHECKED BY: **KAT**

SCALE AS NOTED

STATE OF CONNECTICUT
DEPARTMENT OF TRANSPORTATION

Filename: ...\SB_MSH_Br02169_0160_0150_LONG_SECT.dgn

SIGNATURE/BLOCK:

STATE OF CONNECTICUT · DEPARTMENT OF TRANSPORTATION · No. 19382 · LICENSED · PROFESSIONAL ENGINEER · 5/2/2019

CLOUGH, HARBOUR & ASSOCIATES, LLP
200 CORPORATE PL.
ROCKY HILL, CT 06067

PROJECT TITLE:

REHABILITATION OF BRIDGE NO. 02169
I-84 OVER LOWER RUBY BROOK

TOWN: **WILLINGTON**

DRAWING TITLE: **LONGITUDINAL SECTION**

PROJECT NO. **160-150**

DRAWING NO. **S-03**

SHEET NO. **05.03.A1**

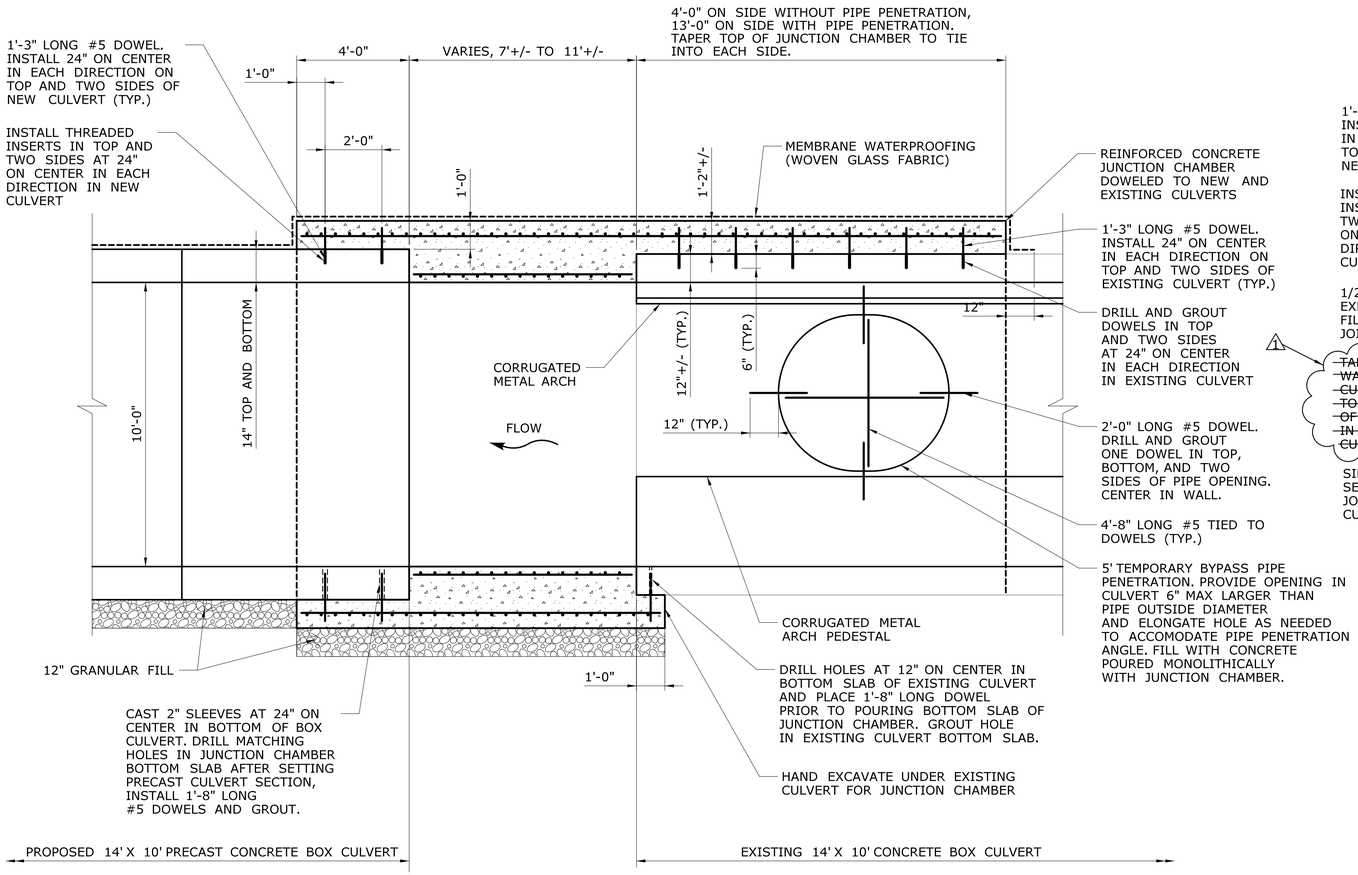

NOTE:
JUNCTION CHAMBER REINFORCING IS THE SAME AS THE BOX CULVERT REINFORCING. REFER TO THE BOX CULVERT REINFORCING SECTION ON DRAWING NO. S-13 FOR SIZE AND SPACING OF REINFORCING.

JUNCTION CHAMBER 1 LONGITUDINAL SECTION

SCALE: 3/8" = 1'-0"

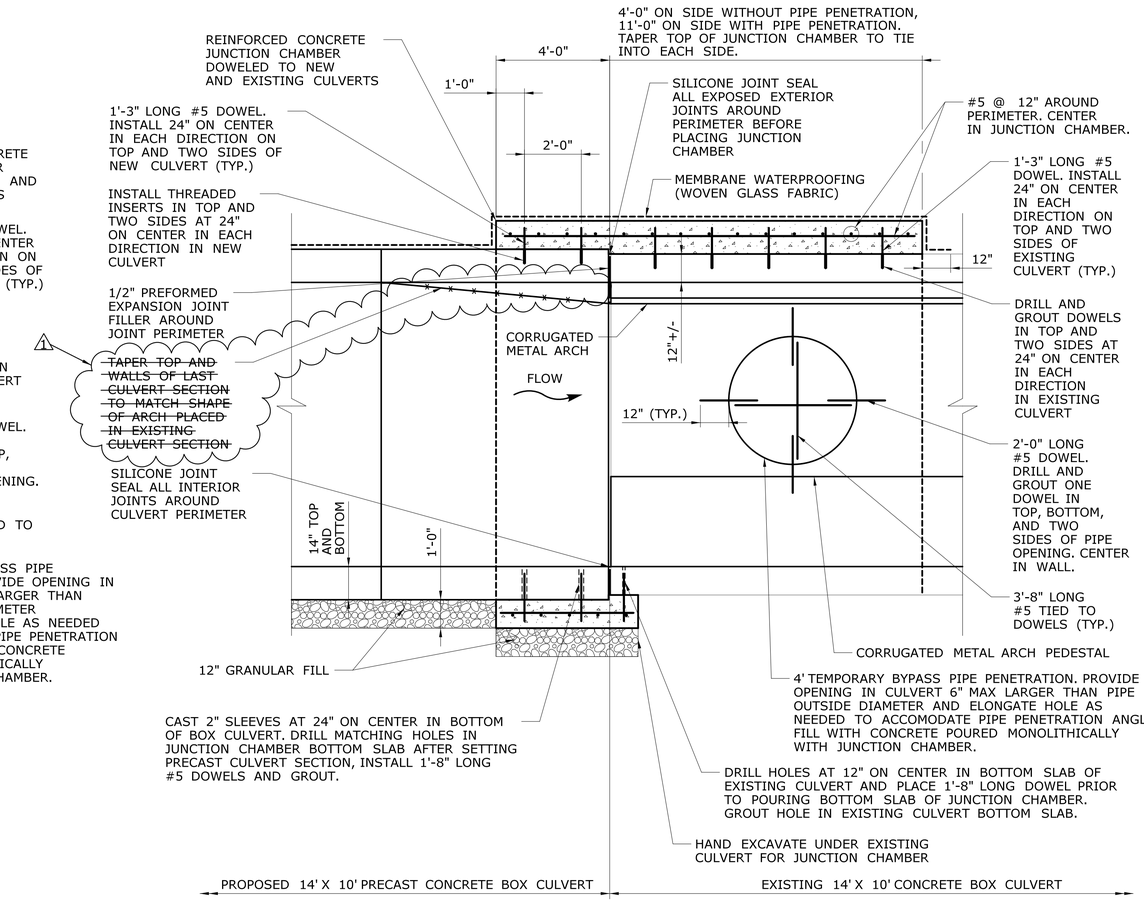

JUNCTION CHAMBER 2 LONGITUDINAL SECTION

SCALE: 3/8" = 1'-0"

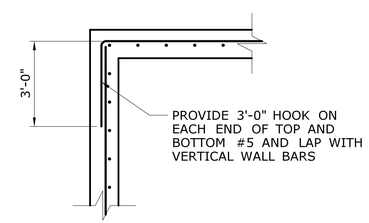

JUNCTION CHAMBER 2 CORNER DETAIL

SCALE: 3/8" = 1'-0"

JUNCTION CHAMBER NOTES:

1. ALL DOWELS SHALL START 1'-0" MINIMUM IN FROM EDGES OF EXISTING CULVERT, EXCEPT IN BOTTOM SLAB WHERE 6" IS ACCEPTABLE.
2. CONCRETE FOR JUNCTION CHAMBER IS PAID UNDER CLASS "A" CONCRETE.
3. REINFORCING AND DOWELS ARE PAID UNDER DEFORMED STEEL BARS - EPOXY COATED.
4. DRILLING AND GROUTING THE DOWELS IS PAID UNDER DRILLING AND GROUTING REINFORCING BARS.

ADDENDUM NO. 1

REV.	DATE	REVISION DESCRIPTION	SHEET NO.
-	-	-	-
-	-	-	-
-	-	-	-
-	-	-	-
-	-	-	-
1	05.01.19	REMOVED TAPERED TOP AND WALLS NOTE	05.05.A1

THE INFORMATION, INCLUDING ESTIMATED QUANTITIES OF WORK, SHOWN ON THESE SHEETS IS BASED ON LIMITED INVESTIGATIONS BY THE STATE AND IS IN NO WAY WARRANTED TO INDICATE THE CONDITIONS OF ACTUAL QUANTITIES OF WORK WHICH WILL BE REQUIRED.

Plotted Date: 5/2/2019

DESIGNER/DRAFTER: PAL
CHECKED BY: KAT
SCALE AS NOTED

STATE OF CONNECTICUT
DEPARTMENT OF TRANSPORTATION

Filename: ...\SB_MSH_Br02169_0160_0150_SECT2.dgn

SIGNATURE/BLOCK:
STATE OF CONNECTICUT PROFESSIONAL ENGINEER No. 19382 LICENSED 5/2/2019

CLOUGH, HARBOUR & ASSOCIATES, LLP
200 CORPORATE PL.
ROCKY HILL, CT 06067

PROJECT TITLE:
REHABILITATION OF BRIDGE NO. 02169 I-84 OVER LOWER RUBY BROOK

TOWN: **WILLINGTON**

DRAWING TITLE: **JUNCTION CHAMBER SECTIONS**

PROJECT NO. **160-150**
DRAWING NO. **S-05**
SHEET NO. **05.05.A1**

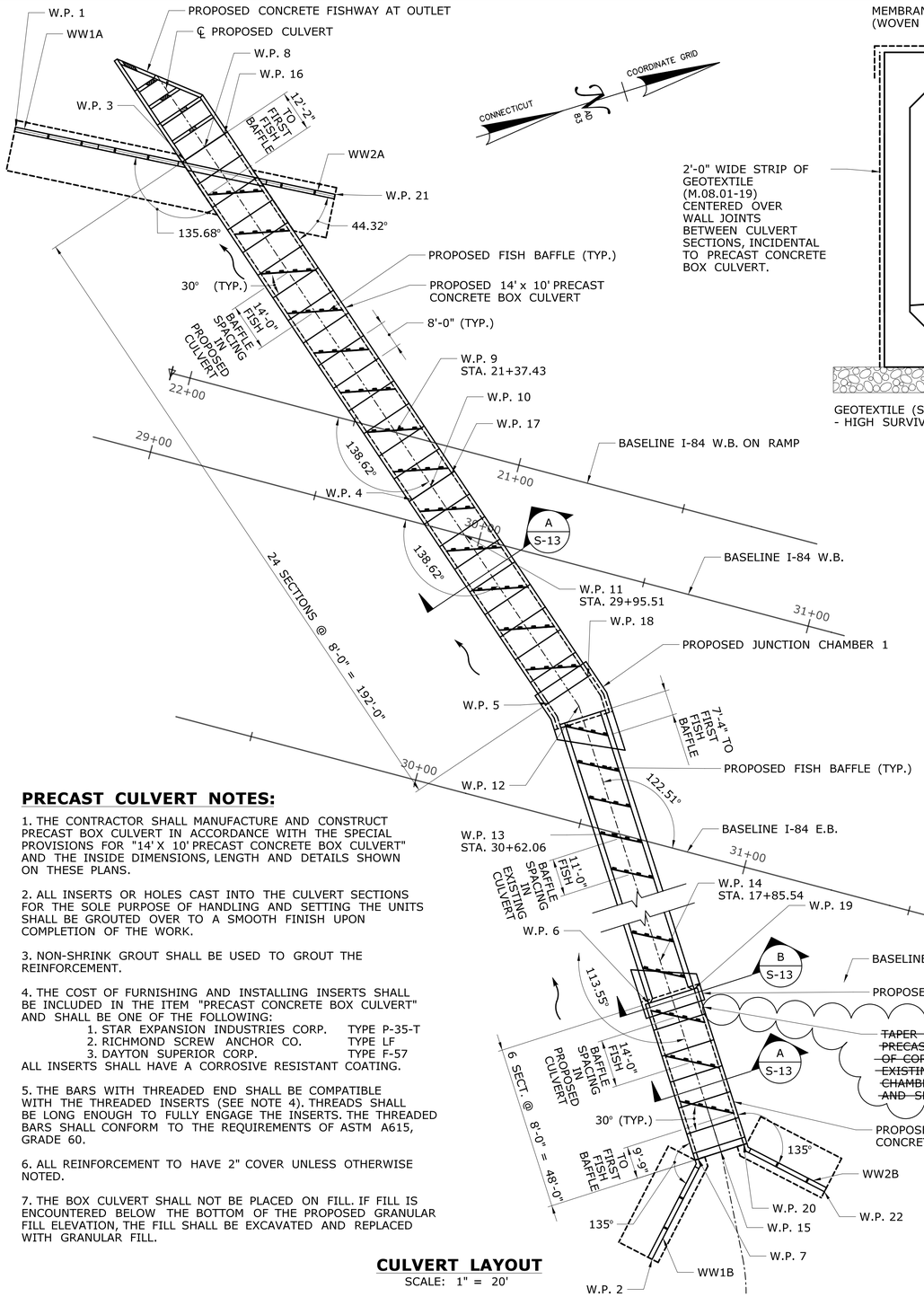

TAPER INTERIOR TOP AND WALLS OF LAST PRECAST BOX SECTION TO MATCH INTO SHAPE OF CORRUGATED METAL ARCH PLACED IN EXISTING BOX CULVERT. SEE JUNCTION CHAMBER 2 SECTION ON DRAWING NO. S-05 AND SECTION B THIS DRAWING. (1)

CULVERT LAYOUT

SCALE: 1" = 20'

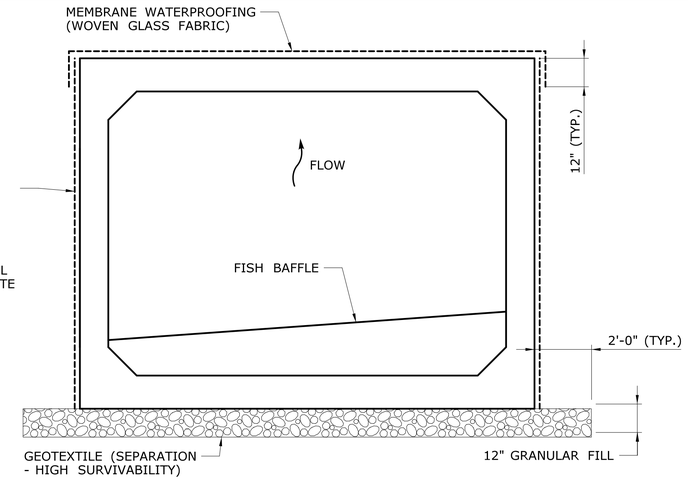

A / - **TYPICAL CULVERT SECTION**

SCALE: 3/8" = 1'-0"

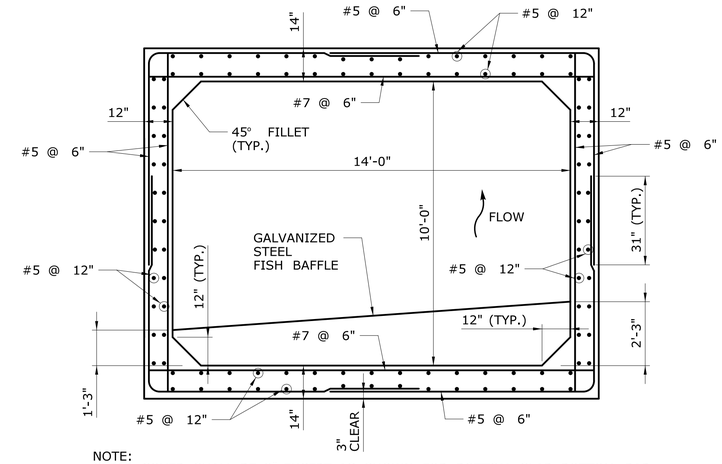

NOTE:
CLEAR COVER SHALL BE 2" EXCEPT AS SHOWN FOR BOTTOM SLAB BOTTOM BAR.

A / - **CULVERT GEOMETRY AND REINFORCEMENT**

SCALE: 3/8" = 1'-0"

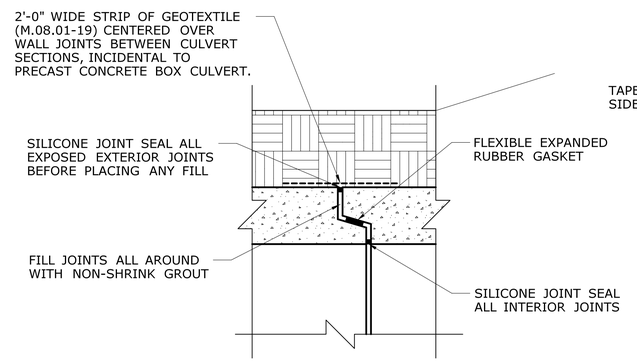

TYPICAL JOINT BETWEEN CULVERT SECTIONS

SCALE: 3/4" = 1'-0"

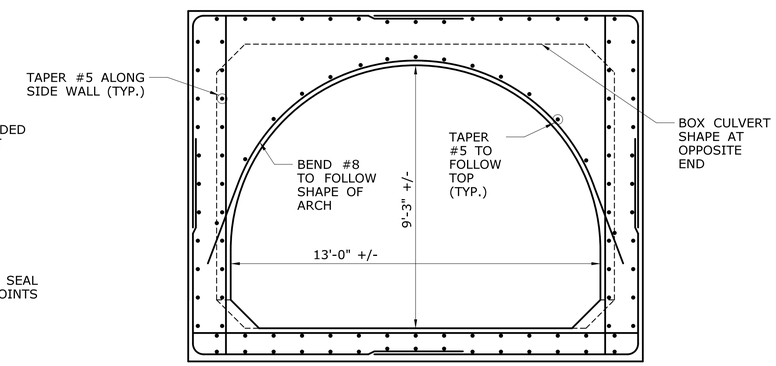

NOTE: REINFORCING IS THE SAME AS SHOWN IN SECTION A.

B / - **CULVERT SECTION AT CORRUGATED METAL ARCH**

SCALE: 3/8" = 1'-0"

PRECAST CULVERT NOTES:

1. THE CONTRACTOR SHALL MANUFACTURE AND CONSTRUCT PRECAST BOX CULVERT IN ACCORDANCE WITH THE SPECIAL PROVISIONS FOR "14' X 10' PRECAST CONCRETE BOX CULVERT" AND THE INSIDE DIMENSIONS, LENGTH AND DETAILS SHOWN ON THESE PLANS.

2. ALL INSERTS OR HOLES CAST INTO THE CULVERT SECTIONS FOR THE SOLE PURPOSE OF HANDLING AND SETTING THE UNITS SHALL BE GROUTED OVER TO A SMOOTH FINISH UPON COMPLETION OF THE WORK.

3. NON-SHRINK GROUT SHALL BE USED TO GROUT THE REINFORCEMENT.

4. THE COST OF FURNISHING AND INSTALLING INSERTS SHALL BE INCLUDED IN THE ITEM "PRECAST CONCRETE BOX CULVERT" AND SHALL BE ONE OF THE FOLLOWING:
   1. STAR EXPANSION INDUSTRIES CORP. TYPE P-35-T
   2. RICHMOND SCREW ANCHOR CO. TYPE LF
   3. DAYTON SUPERIOR CORP. TYPE F-57

   ALL INSERTS SHALL HAVE A CORROSIVE RESISTANT COATING.

5. THE BARS WITH THREADED END SHALL BE COMPATIBLE WITH THE THREADED INSERTS (SEE NOTE 4). THREADS SHALL BE LONG ENOUGH TO FULLY ENGAGE THE INSERTS. THE THREADED BARS SHALL CONFORM TO THE REQUIREMENTS OF ASTM A615, GRADE 60.

6. ALL REINFORCEMENT TO HAVE 2" COVER UNLESS OTHERWISE NOTED.

7. THE BOX CULVERT SHALL NOT BE PLACED ON FILL. IF FILL IS ENCOUNTERED BELOW THE BOTTOM OF THE PROPOSED GRANULAR FILL ELEVATION, THE FILL SHALL BE EXCAVATED AND REPLACED WITH GRANULAR FILL.

WORKING POINTS

POINT	NORTH	EAST	DESCRIPTION
W.P. 1	896958.414	1132898.996	WW1A FRONT CORNER
W.P. 2	897040.341	1133296.296	WW1B FRONT CORNER
W.P. 3	897003.207	1132922.883	INSIDE FACE OF BOX CULVERT AT OUTLET
W.P. 4	897037.886	1133037.762	INSIDE FACE OF BOX CULVERT AT STAGE CONSTRUCTION JOINT
W.P. 5	897058.694	1133106.690	INSIDE FACE OF BOX CULVERT AT END OF LAST PRECAST SECTION
W.P. 6	897061.397	1133224.076	INSIDE FACE OF BOX CULVERT AT JOINT WITH EXISTING BOX CULVERT
W.P. 7	897061.972	1133272.073	INSIDE FACE OF BOX CULVERT AT INLET
W.P. 8	897009.908	1132920.860	℄ OF CULVERT AT OUTLET
W.P. 9	897039.089	1133017.524	INTERSECTION ℄ CULVERT AND BASELINE I-84 W.B. ON RAMP
W.P. 10	897044.587	1133035.739	℄ OF CULVERT AT STAGE CONSTRUCTION JOINT
W.P. 11	897049.581	1133052.282	INTERSECTION ℄ CULVERT AND BASELINE I-84 W.B.
W.P. 12	897067.033	1133110.093	℄ CULVERT AT BEND
W.P. 13	897067.506	1133149.608	INTERSECTION ℄ CULVERT AND BASELINE I-84 E.B.
W.P. 14	897068.038	1133194.068	INTERSECTION ℄ CULVERT AND BASELINE I-84 E.B. ON RAMP
W.P. 15	897068.972	1133271.989	℄ CULVERT AT INLET
W.P. 16	897016.609	1132918.837	INSIDE FACE OF BOX CULVERT AT OUTLET
W.P. 17	897051.289	1133033.717	INSIDE FACE OF BOX CULVERT AT STAGE CONSTRUCTION JOINT
W.P. 18	897072.096	1133102.644	INSIDE FACE OF BOX CULVERT AT END OF LAST PRECAST SECTION
W.P. 19	897075.396	1133223.909	INSIDE FACE OF BOX CULVERT AT JOINT WITH EXISTING BOX CULVERT
W.P. 20	897075.971	1133271.905	INSIDE FACE OF BOX CULVERT AT INLET
W.P. 21	897042.493	1132945.367	WW2A FRONT CORNER
W.P. 22	897094.599	1133292.110	WW2B FRONT CORNER

ADDENDUM NO. 1

REV.	DATE	REVISION DESCRIPTION	SHEET NO.
-	-	-	-
-	-	-	-
-	-	-	-
-	-	-	-
-	-	-	-
1	05.01.19	REMOVED TAPERED TOP AND WALLS NOTE	05.013.A1

THE INFORMATION, INCLUDING ESTIMATED QUANTITIES OF WORK, SHOWN ON THESE SHEETS IS BASED ON LIMITED INVESTIGATIONS BY THE STATE AND IS IN NO WAY WARRANTED TO INDICATE THE CONDITIONS OF ACTUAL QUANTITIES OF WORK WHICH WILL BE REQUIRED.

Plotted Date: 5/2/2019

DESIGNER/DRAFTER: PAL
CHECKED BY: KAT
SCALE AS NOTED

STATE OF CONNECTICUT
DEPARTMENT OF TRANSPORTATION

Filename: ...\SB_MSH_Br02169_0160_0150_CUL_PLAN.dgn

SIGNATURE/BLOCK: STATE OF CONNECTICUT, No. 19382, LICENSED PROFESSIONAL ENGINEER, 5/2/2019

CLOUGH, HARBOUR & ASSOCIATES, LLP
200 CORPORATE PL.
ROCKY HILL, CT 06067

PROJECT TITLE:
REHABILITATION OF BRIDGE NO. 02169 I-84 OVER LOWER RUBY BROOK

TOWN: **WILLINGTON**

DRAWING TITLE: **CULVERT PLAN & JOINT DETAILS**

PROJECT NO. 160-150
DRAWING NO. S-13
SHEET NO. 05.013.A1