GENERAL NOTES

SPECIFICATIONS: CONNECTICUT DEPARTMENT OF TRANSPORTATION FORM 817 (2016), SUPPLEMENTAL SPECIFICATIONS DATED JULY 2018, AND SPECIAL PROVISIONS.

DESIGN SPECIFICATIONS: AASHTO LRFD BRIDGE DESIGN SPECIFICATIONS (SEVENTH EDITION, 2014 WITH 2016 INTERIM REVISIONS), AS SUPPLEMENTED BY THE CONNECTICUT DEPARTMENT OF TRANSPORTATION BRIDGE DESIGN MANUAL (2003 EDITION) INCLUDING REVISIONS TO 2011.

ALLOWABLE DESIGN STRESSES:
CAST-IN-PLACE CONCRETE:
CLASS "F" CONCRETE BASED ON f'c = 4,000 P.S.I.

PRECAST CONCRETE BOX CULVERT: CLASS "F" CONCRETE BASED ON f'c = 5,000 P.S.I.
PRECAST CONCRETE SUBSTRUCTURE ELEMENTS: CLASS "F" CONCRETE BASED ON f'c = 5,000 P.S.I.

REINFORCEMENT (ASTM A615 GRADE 60) fy = 60,000 P.S.I.

BITUMINOUS CONCRETE OVERLAY: THIS SHALL CONSIST OF 4" HMA S0.5 (TRAFFIC LEVEL 2) PLACED IN 2 EQUAL LIFTS (TOP COURSE), 1" TO 3.5" HMA S0.5 (TRAFFIC LEVEL 2) (INTERMEDIATE WEDGE COURSES), AND 1" HMA S0.25 (TRAFFIC LEVEL 2) (BOTTOM COURSE). HMA S0.5 VARIES IN THICKNESS TO ACHIEVE CROSS-SLOPE WITH LIFTS VARYING IN THICKNESS BETWEEN 1"-3.5".

LIVE LOAD:
AASHTO HL-93 DESIGN VEHICLE
CONNDOT OPERATING VEHICLES (P204 & P380)

FUTURE PAVING ALLOWANCE: NONE

FOUNDATION PRESSURES: THE VARIOUS LIMIT STATE LOADINGS NOTED ON THE SUBSTRUCTURE PLAN SHEETS REFER TO THE LIMIT STATE LOADS AS GIVEN IN THE AASHTO LRFD BRIDGE DESIGN SPECIFICATIONS.

DIMENSIONS: WHEN DIMENSIONS ARE GIVEN TO LESS THAN THREE DECIMAL PLACES, THE OMITTED DIGITS SHALL BE ASSUMED TO BE ZEROS.

BRIDGE IDENTIFICATION PLACARDS: THE CONTRACTOR SHALL PROVIDE AND INSTALL NEW BRIDGE IDENTIFICATION SIGNS AT THE LEADING END OF THE BRIDGE ON THE TRAFFIC SIDE. THE SIGNS SHALL BE FABRICATED WITH 40 GAUGE ALUMINUM SHEET METAL. THE SIGNS SHALL BE 4" X 12" WITH 3" REFLECTIVE BLOCK LETTERS ON GREEN REFLECTIVE SHEETING. EACH SIGN SHALL READ: (06676). ALL COSTS ASSOCIATED WITH PROVIDING AND INSTALLING THE BRIDGE SIGNS SHALL BE COVERED UNDER THE ITEM 1208931A SIGN FACE - SHEET ALUMINUM (TYPE IX RETROREFLECTIVE SHEETING). THE FINAL LOCATION AND ATTACHMENT METHOD FOR THE SIGNS SHALL BE APPROVED BY THE ENGINEER PRIOR TO INSTALLATION.

DEWATERING: BEFORE INITIATING CONSTRUCTION, THE CONTRACTOR SHALL SUBMIT A PLAN FOR APPROVAL THAT DEFINES METHODS AND MATERIALS FOR CONTROLLING STREAM WATER DEWATERING, STRUCTURE EXCAVATION, AND PROTECTING THE STREAM DURING CONSTRUCTION. THE COST OF THIS WORK SHALL BE INCLUDED IN THE COST OF "HANDLING WATER".

PRECAST CONCRETE BOX CULVERT: SEE SPECIAL PROVISIONS.

PRECAST SUBSTRUCTURE ELEMENTS: SEE SPECIAL PROVISIONS.

TRAFFIC: ALL WORK SHALL BE DONE IN ACCORDANCE WITH THE SPECIAL PROVISIONS "MAINTENANCE AND PROTECTION OF TRAFFIC" AND "SECTION 1.08 - PROSECUTION AND PROGRESS" OF FORM 817 (2016).

CONCRETE:
PRECAST, NON-PRESTRESSED CONCRETE (f'c = 5,000 P.S.I.) SHALL BE USED FOR PRECAST CONCRETE BOX CULVERT, PRECAST CONCRETE HEADWALLS, AND PRECAST CONCRETE BARRIERS ON TOP OF HEADWALLS. THE COST OF THIS CONCRETE SHALL BE INCLUDED UNDER THE ITEM FOR "10' X 5' PRECAST CONCRETE BOX CULVERT". SEE SPECIAL PROVISIONS.
PRECAST, NON-PRESTRESSED CONCRETE (f'c = 5,000 P.S.I.) SHALL BE USED FOR PRECAST CONCRETE CUTOFF AND RETURN WALLS, PRECAST CONCRETE U-TYPE WINGWALL ELEMENTS, INCLUDING FOOTING, STEM, PRECAST CONCRETE BARRIERS ON TOP OF WINGWALL STEMS. THE COST OF THIS CONCRETE SHALL BE INCLUDED UNDER THE ITEM FOR "PRECAST SUBSTRUCTURE ELEMENTS". SEE SPECIAL PROVISIONS.

JOINT SEAL: SEE SPECIAL PROVISIONS, 10' X 5' PRECAST CONCRETE BOX CULVERT.

EXPOSED EDGES: EXPOSED EDGES OF CONCRETE SHALL BE BEVELED 1" X 1" UNLESS DIMENSIONED OTHERWISE.

CONCRETE COVER: ALL REINFORCEMENT SHALL HAVE TWO INCHES COVER UNLESS DIMENSIONED OTHERWISE.

EPOXY COATED REINFORCING BARS: ALL REINFORCEMENT SHALL BE EPOXY COATED. BARS WITHIN PRECAST CONCRETE BOX CULVERT, PRECAST CONCRETE HEADWALLS, AND PRECAST CONCRETE BARRIERS ON TOP OF HEADWALLS SHALL BE INCLUDED IN THE PAY ITEM FOR "10' X 5' PRECAST CONCRETE BOX CULVERT". BARS WITHIN PRECAST CONCRETE CUTOFF AND RETURN WALLS, PRECAST CONCRETE U-TYPE WINGWALL ELEMENTS, INCLUDING FOOTING, STEM, PRECAST CONCRETE BARRIERS ON TOP OF WINGWALL STEMS SHALL BE INCLUDED IN THE PAY ITEM FOR "PRECAST SUBSTRUCTURE ELEMENTS". PAYMENT FOR ALL OTHER EPOXY COATED REINFORCING BARS FOR INSTALLATION OF DOWELS SHALL BE INCLUDED IN THE PAY ITEM FOR "DRILLING HOLES AND GROUTING DOWELS."

CONSTRUCTION JOINTS: CONSTRUCTION JOINTS, OTHER THAN THOSE SHOWN ON PLANS, WILL NOT BE PERMITTED WITHOUT THE PRIOR APPROVAL OF THE ENGINEER.

PREFORMED EXPANSION JOINT FILLER: THE COST OF FURNISHING AND INSTALLING PREFORMED EXPANSION JOINT FILLER SHALL BE INCLUDED IN THE COST OF THE ITEM "10' X 5' PRECAST CONCRETE BOX CULVERT."

TEMPORARY COFFERDAM: CONTRACTOR SHALL USE VIBRATORY METHODS TO INSTALL AND REMOVE COFFERDAM. CONTRACTOR TO CONSIDER POTENTIAL FOR VIBRATION INDUCED SETTLEMENT ON COFFERDAM INSTALLATION AND REMOVAL. CONTRACTOR SHALL COMPLETELY REMOVE ALL PARTS OF THE COFFERDAM LOCATED WITHIN WETLANDS.

UTILITY RELOCATIONS: AN EXISTING 8" P.V.C. SANITARY SEWER PIPE WILL BE RELOCATED AROUND THE PROPOSED CULVERT TO THE SOUTH OF ROUTE 1. SEE DRAWING NO. UTL-01.

NATIVE STREAMBED MATERIAL: NATIVE STREAMBED MATERIAL EXCAVATED DURING THE PRE-CAST CONCRETE BOX CULVERT INSTALLATION SHALL BE STOCKPILED AND THEN REUSED WITHIN THE STREAM AND PRECAST CONCRETE BOX CULVERT TO THE DEPTH SHOWN ON THE PLANS, AS DIRECTED BY THE ENGINEER AND IN ACCORDANCE WITH THE PERMIT DOCUMENTS. IF THERE IS NOT SUFFICIENT NATIVE MATERIAL PRESENT, SUPPLEMENTAL MATERIAL WILL BE REQUIRED (ITEM #0202217A - SUPPLEMENTAL STREAMBED CHANNEL MATERIAL). THE STOCKPILE SHALL BE LOCATED OUTSIDE THE WETLAND LIMITS AND PROTECTED WITH SEDIMENTATION CONTROL SYSTEM.

STRUCTURE QUANTITIES

ITEM	UNIT	QUANTITY
STRUCTURE EXCAVATION-EARTH (EXCLUDING COFFERDAM AND DEWATERING)	C.Y.	515
COFFERDAM AND DEWATERING	L.F.	191
HANDLING WATER	L.S.	1
GRANULAR FILL	C.Y.	6
PERVIOUS STRUCTURE BACKFILL	C.Y.	150
HMA S0.5	TON	20
HMA S0.25	TON	3
REMOVAL OF EXISTING CULVERT (SITE NO.1)	L.S.	1
10' X 5' PRECAST CONCRETE BOX CULVERT	L.F.	37
CLASS "F" CONCRETE	C.Y.	10
PRECAST SUBSTRUCTURE ELEMENTS	L.S.	1
DEFORMED STEEL BARS - EPOXY COATED	LB	1,210
DRILLING HOLES AND GROUTING DOWELS	EA.	16
INTERMEDIATE RIPRAP	C.Y.	27
MEMBRANE WATERPROOFING (COLD LIQUID ELASTOMERIC)	S.Y.	58
DAMPPROOFING	S.Y.	41
⅜" CRUSHED STONE	C.Y.	74
GEOTEXTILE (SEPARATION - HIGH SURVIVABILITY)	S.Y.	147
PENETRATING SEALER PROTECTIVE COMPOUND	S.Y.	19
METAL BRIDGE RAIL (HANDRAIL)	L.F.	64

TRANSPORTATION DATA *

MEMBER	SHIPPING WEIGHT
CULVERT - UNIT 1	48,970 LB
CULVERT - UNIT 2	48,630 LB
CULVERT - UNIT 3	48,630 LB
CULVERT - UNIT 4	48,630 LB
CULVERT - UNIT 5	48,690 LB
WW1A - FOOTING	33,980 LB
WW1A - STEM	28,620 LB
WW2B - FOOTING	33,980 LB
WW2B - STEM	28,310 LB
WW1B - FOOTING	43,970 LB
WW1B - STEM	31,410 LB
WW2A - FOOTING	43,970 LB
WW2A - STEM	30,580 LB

*THE SHIPPING WEIGHT PROVIDED REPRESENTS THE APPROXIMATE WEIGHT FOR EACH PRECAST CONCRETE MEMBER. THE CONTRACTOR IS RESPONSIBLE TO VERIFY THE WEIGHT OF EACH MEMBER AND ENSURE THE STABILITY OF EACH MEMBER AT LIFT AND ERECTION.

HYDRAULIC DATA

DRAINAGE AREA	0.64 SQ. MILES
DESIGN FREQUENCY	50 YEAR
DESIGN DISCHARGE	220 C.F.S.
AVERAGE DAILY FLOW ELEVATION	65.60 FT.
UPSTREAM DESIGN WATER SURFACE ELEVATION	69.52 FT.
DOWNSTREAM DESIGN WATER SURFACE ELEVATION	67.30 FT.
MAXIMUM SCOUR ELEVATION	*
FREQUENCY	
DISCHARGE	
WORST CASE SCOUR SUB-STRUCTURE UNIT	

*SCOUR DEPTHS NOT DETERMINED. PROPOSED STRUCTURE TO BE A PRECAST REINFORCED CONCRETE BOX CULVERT.

NOTICE TO BRIDGE INSPECTORS

THE DEPARTMENT'S BRIDGE SAFETY PROCEDURES REQUIRE THIS BRIDGE TO BE INSPECTED FOR, BUT NOT LIMITED TO, ALL APPROPRIATE COMPONENTS INDICATED IN THE GOVERNING MANUALS FOR BRIDGE INSPECTION. ATTENTION MUST BE GIVEN TO INSPECTING THE FOLLOWING SPECIAL COMPONENTS AND DETAILS. (THE LISTING OF COMPONENTS FOR SPECIFIC ATTENTION SHALL NOT BE CONSTRUED TO REDUCE THE IMPORTANCE OF INSPECTION OF ANY OTHER COMPONENT OF THE STRUCTURE.) THE FREQUENCY OF INSPECTION OF THIS STRUCTURE SHALL BE IN ACCORDANCE WITH THE GOVERNING MANUALS FOR BRIDGE INSPECTION, UNLESS OTHERWISE DIRECTED BY THE MANAGER OF BRIDGE SAFETY AND EVALUATION.

COMPONENT OR DETAIL	STRUCTURE SHEET REFERENCE
FOLLOW NORMAL INSPECTION PROCEDURES	-

DESIGNED BY:
CDR GROUP INC.

STATE OF CONNECTICUT
JONATHAN L. GEARY
No. 30078
LICENSED
PROFESSIONAL ENGINEER

Jonathan Geary
2019.04.24
13:59:28-04'00'

ADDENDUM NO. 2

REV.	DATE	REVISION DESCRIPTION	SHEET NO.
1	04/19/2019	ADDENDUM NO. 2 - PRECAST CONCRETE BRIDGE BARRIER	04.02.A2

THE INFORMATION, INCLUDING ESTIMATED QUANTITIES OF WORK, SHOWN ON THESE SHEETS IS BASED ON LIMITED INVESTIGATIONS BY THE STATE AND IS IN NO WAY WARRANTED TO INDICATE THE CONDITIONS OF ACTUAL QUANTITIES OF WORK WHICH WILL BE REQUIRED.

Plotted Date: 4/24/2019

DESIGNER/DRAFTER: **C. MERINO**
CHECKED BY: **D. ICON**
SCALE AS NOTED

STATE OF CONNECTICUT
DEPARTMENT OF TRANSPORTATION

Filename: ...\SB_MSH_0044-0157_S-2_A02.dgn

SIGNATURE/BLOCK:
STATE OF CONNECTICUT JONATHAN L. GEARY No. 30078 LICENSED PROFESSIONAL ENGINEER
CDR Group, Inc.
2080 Silas Deane Highway
Rocky Hill, CT 06067

PROJECT TITLE:
REPLACEMENT OF BRIDGE NO. 06676, US ROUTE 1 OVER UNNAMED BROOK

TOWN: **EAST LYME**

DRAWING TITLE: **GENERAL NOTES AND QUANTITIES**

PROJECT NO. **44-157**
DRAWING NO. **S-2**
SHEET NO. **04.02.A2**

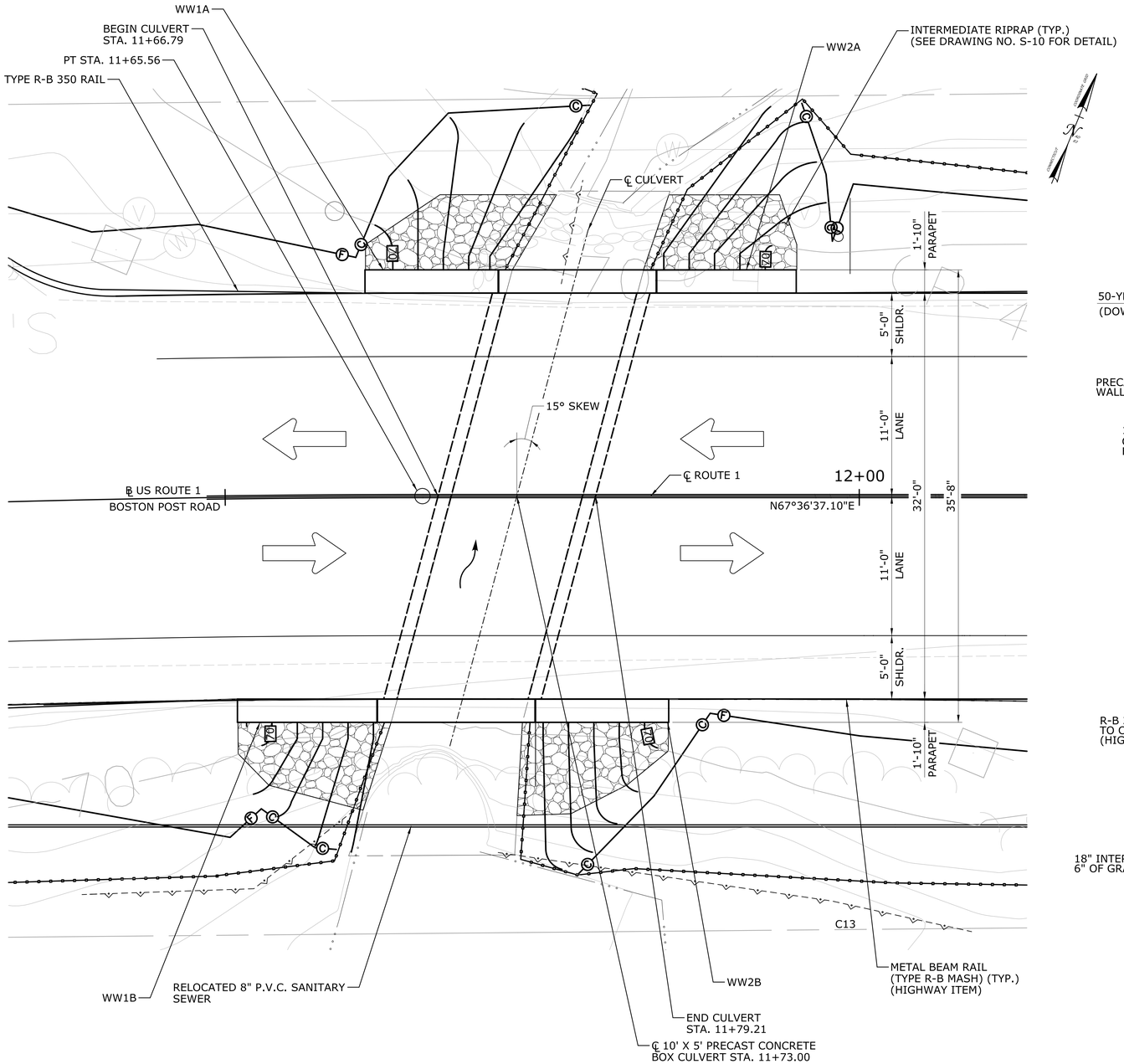

GENERAL PLAN

SCALE: 1" = 5'

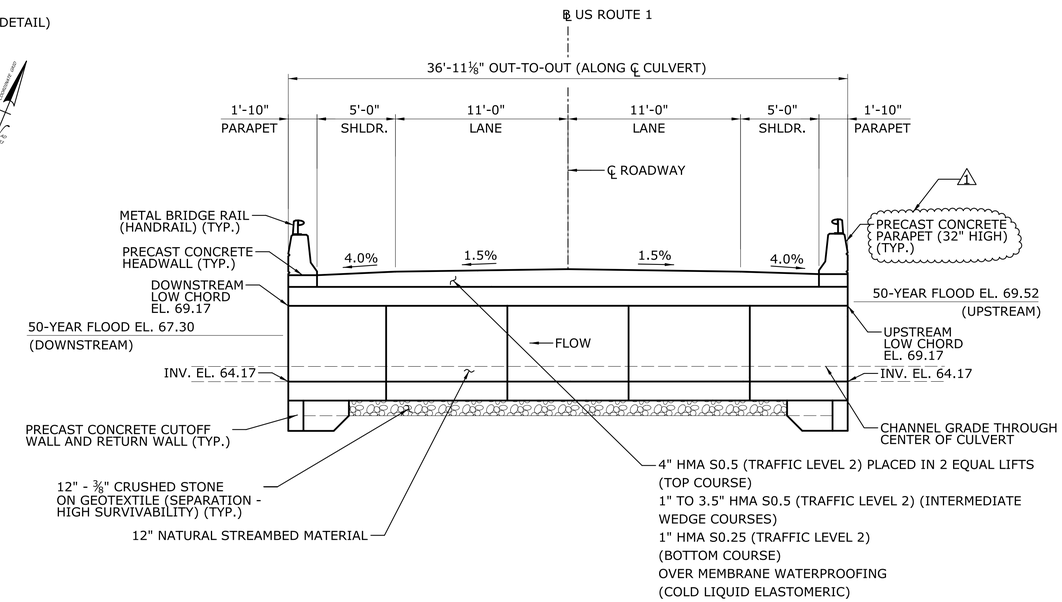

TYPICAL SECTION

SCALE: 1" = 5'

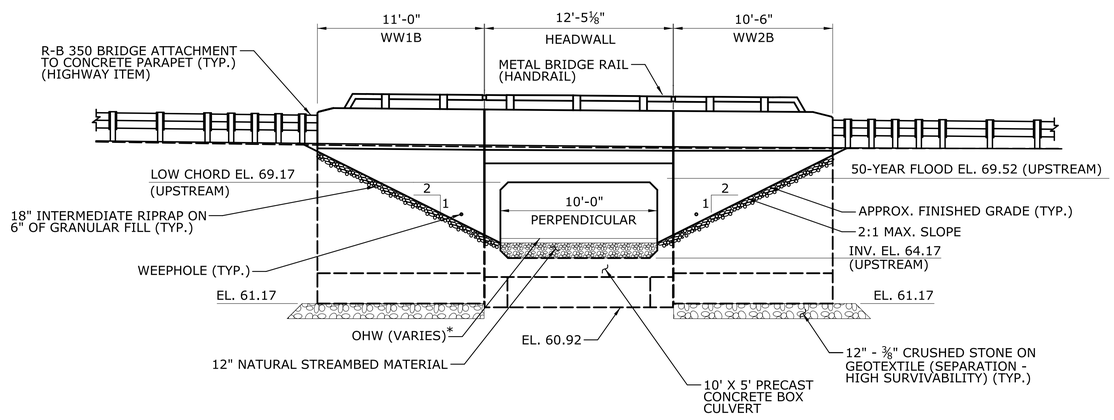

*ORDINARY HIGH WATER (OHW) VARIES FROM EL. 66.16 UPSTREAM TO EL. 65.71 DOWNSTREAM.

UPSTREAM ELEVATION (LOOKING DOWNSTREAM)

SCALE: 1" = 5'

ADDENDUM NO. 2

REV.	DATE	REVISION DESCRIPTION	SHEET NO.
1	04/19/2019	ADDENDUM NO. 2 - PRECAST CONCRETE BRIDGE BARRIER	04.03.A2

THE INFORMATION, INCLUDING ESTIMATED QUANTITIES OF WORK, SHOWN ON THESE SHEETS IS BASED ON LIMITED INVESTIGATIONS BY THE STATE AND IS IN NO WAY WARRANTED TO INDICATE THE CONDITIONS OF ACTUAL QUANTITIES OF WORK WHICH WILL BE REQUIRED.

Plotted Date: 4/24/2019

DESIGNER/DRAFTER: C. MERINO
CHECKED BY: D. ICON
SCALE AS NOTED

STATE OF CONNECTICUT
DEPARTMENT OF TRANSPORTATION

Filename: ...\SB_MSH_0044-0157_S-3_A02.dgn

SIGNATURE/BLOCK:
CDR Group, Inc.
2080 Silas Deane Highway
Rocky Hill, CT 06067

PROJECT TITLE:
REPLACEMENT OF BRIDGE NO. 06676, US ROUTE 1 OVER UNNAMED BROOK

TOWN: EAST LYME

DRAWING TITLE: GENERAL PLAN, SECTION, AND ELEVATION

PROJECT NO. 44-157
DRAWING NO. S-3
SHEET NO. 04.03.A2

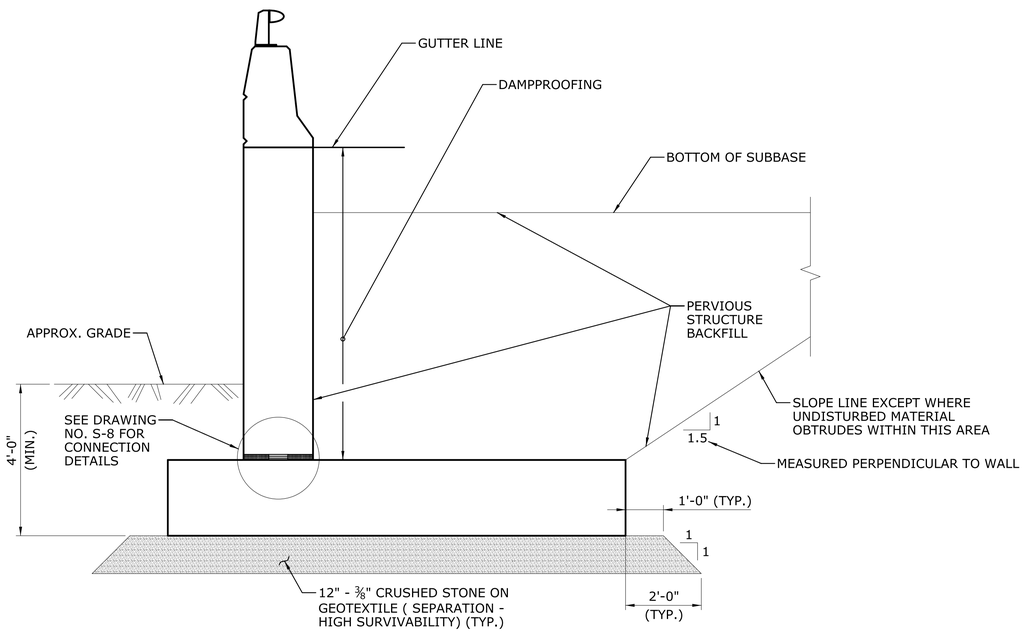

TYPICAL PAY LIMITS AT U-TYPE WINGWALLS

SCALE: ½" = 1'

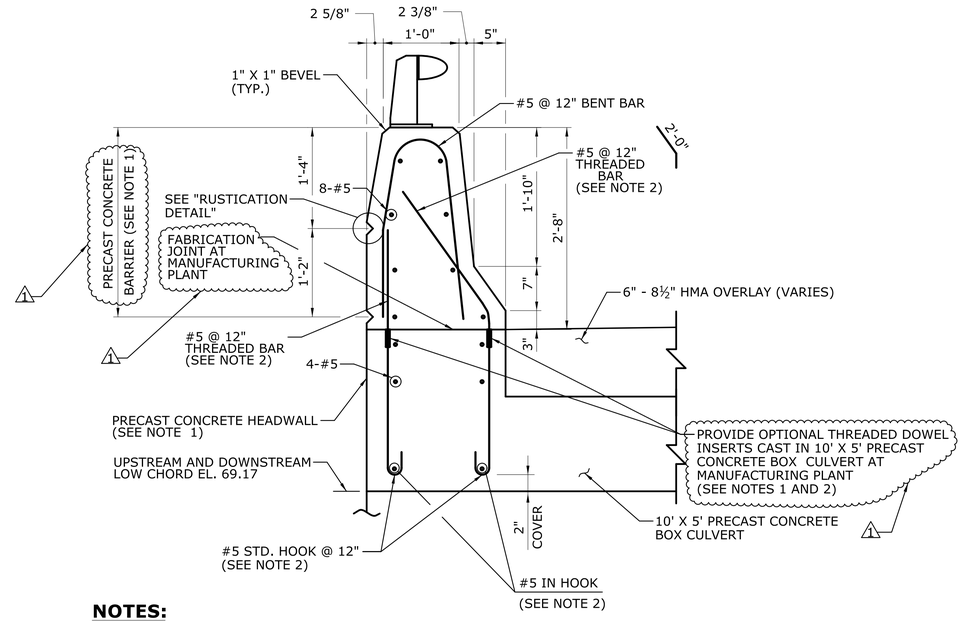

NOTES:

1. PRECAST CONCRETE HEADWALLS AND PARAPETS AS PART OF THE CULVERT END UNITS. PRECAST CONCRETE HEADWALLS AND PARAPETS SHALL BE CAST AT MANUFACTURING PLANT PRIOR TO DELIVERY OF PRECAST CONCRETE BOX CULVERT END UNITS TO SITE.
2. BARS TO BE USED WITH OPTIONAL THREADED DOWEL INSERTS CAST AT MANUFACTURING PLANT INTO THE TOP OF THE PRECAST CONCRETE BOX CULVERT END UNITS ONLY. THREADED DOWEL INSERTS SHALL BE PAID FOR UNDER THE ITEM "10' X 5' PRECAST CONCRETE BOX CULVERT." FULL-MECHANICAL CONNECTION SHALL NOT BE LESS THAN 125 PERCENT OF THE SPECIFIED YIELD STRENGTH OF THE BAR.
3. ANCHORAGE DETAILS FOR METAL BRIDGE RAIL (HANDRAIL) NOT SHOWN FOR CLARITY PURPOSES. SEE DRAWING NO. S-11 FOR DETAILS.
4. CONCRETE FOR PRECAST CONCRETE BARRIER IS CLASS "F" (SEE DRAWING NO. S-2).
5. THE CONTRACTOR SHALL MANUFACTURE AND CONSTRUCT THE PRECAST CONCRETE PARAPETS SET ON TOP OF THE HEADWALLS IN ACCORDANCE WITH THE SPECIAL PROVISIONS FOR "10' X 5' PRECAST CONCRETE BOX CULVERT ", AND TO THE DIMENSIONS SHOWN IN THESE PLANS.

PARAPET DETAIL

SCALE: 1" = 1'

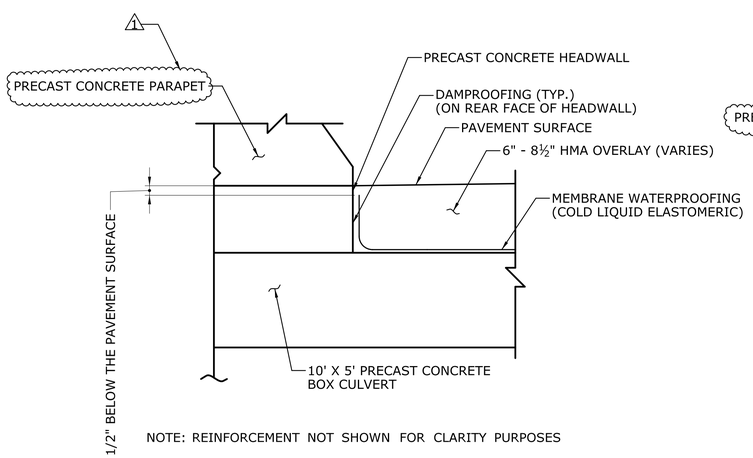

NOTE: REINFORCEMENT NOT SHOWN FOR CLARITY PURPOSES

MEMBRANE WATERPROOFING AT PARAPET

SCALE:1" = 1'

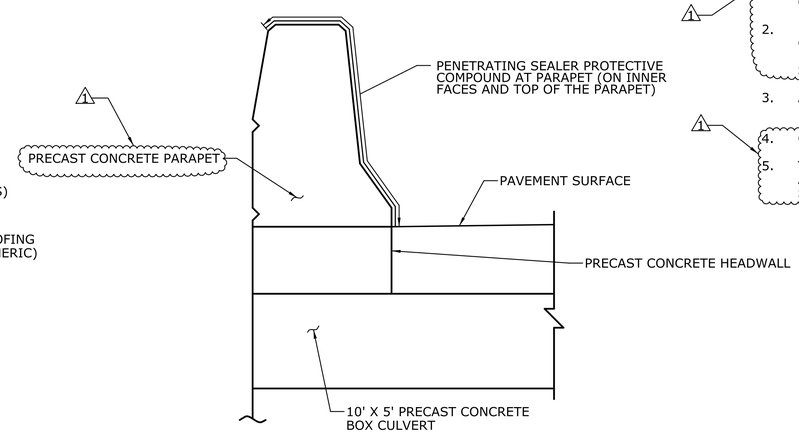

NOTE: REINFORCEMENT NOT SHOWN FOR CLARITY PURPOSES

PENETRATING SEALER PROTECTIVE COMPOUND AT PARAPET

SCALE:1" = 1'

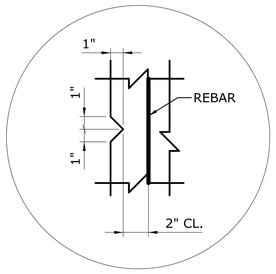

RUSTICATION DETAIL

SCALE: N.T.S.

ADDENDUM NO. 2

REV.	DATE	REVISION DESCRIPTION	SHEET NO.
1	04/19/2019	ADDENDUM NO. 2 - PRECAST CONCRETE BRIDGE BARRIER	04.07.A2

THE INFORMATION, INCLUDING ESTIMATED QUANTITIES OF WORK, SHOWN ON THESE SHEETS IS BASED ON LIMITED INVESTIGATIONS BY THE STATE AND IS IN NO WAY WARRANTED TO INDICATE THE CONDITIONS OF ACTUAL QUANTITIES OF WORK WHICH WILL BE REQUIRED.

Plotted Date: 4/24/2019

DESIGNER/DRAFTER: C. MERINO
CHECKED BY: D. ICON
SCALE AS NOTED

STATE OF CONNECTICUT
DEPARTMENT OF TRANSPORTATION

Filename: ...\SB_MSH_0044-0157_S-7_A02.dgn

SIGNATURE/BLOCK:
STATE OF CONNECTICUT JOHN MARK L. BEAUDET No. 30078 PROFESSIONAL ENGINEER
CDR Group, Inc.
2080 Silas Deane Highway
Rocky Hill, CT 06067

PROJECT TITLE:
REPLACEMENT OF BRIDGE NO. 06676, US ROUTE 1 OVER UNNAMED BROOK

TOWN: **EAST LYME**

DRAWING TITLE: **WINGWALL AND PARAPET DETAILS**

PROJECT NO. **44-157**
DRAWING NO. **S-7**
SHEET NO. **04.07.A2**

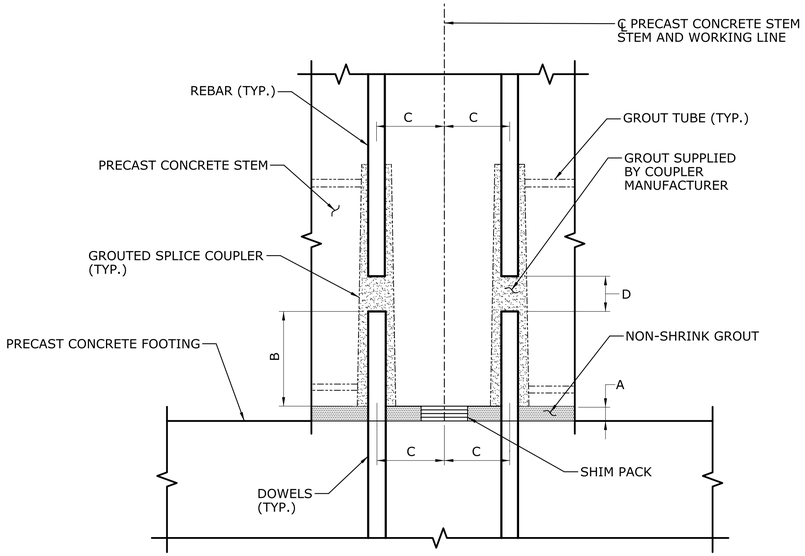

GROUTED SPLICE COUPLER NOTES:

1. USE MATCHING TEMPLATES FOR THE LOCATION OF REINFORCEMENT AND GROUTED SPLICE COUPLER PLACEMENT WITHIN THE ELEMENTS TO CONTROL THE CRITICAL DIMENSION "C".
2. CONSULT MANUFACTURER OF THE GROUTED SPLICE COUPLER FOR PROPER DIMENSIONS "B" AND "D" AND FOR TOLERANCES ON THESE AND ALL DIMENSIONS.
3. BEFORE EXECUTING GROUTED SPLICE COUPLER ASSEMBLIES, ALWAYS SEEK INSTALLATION RECOMMENDATIONS FROM THE MANUFACTURER OF THE GROUTED SPLICE COUPLER USED.

GROUTED SPLICE COUPLER DETAIL

SCALE: N.T.S.

GROUTED SPLICE COUPLER TOLERANCES

A	SHIM PACK HEIGHT	1¼" ± ¾"
B	DOWEL HEIGHT	CONSULT MANUFACTURER
C	LOCATION OF REINFORCING, GROUTED SPLICE COUPLER, AND DOWELS MEASURED FROM A WORKING LINE	±¼"
D	GAP BETWEEN DOWELS AND REINFORCING	CONSULT MANUFACTURER

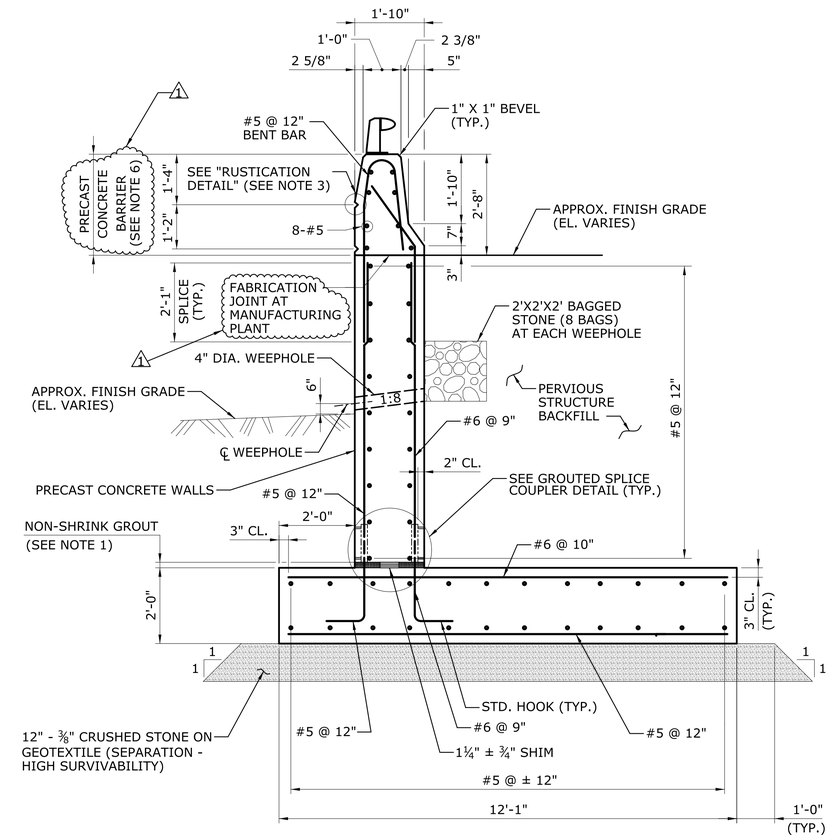

PRECAST CONCRETE U-TYPE WINGWALL DETAIL

SCALE: ½" = 1'

WINGWALL DETAIL NOTES:

1. PRE-BED PRECAST ELEMENT WITH NON-SHRINK GROUT WITH THICKNESS MORE THAN SHIM STACK.
2. GROUTED SPLICE COUPLERS SHALL BE INCLUDED IN COST FOR PRECAST CONCRETE WALLS AND SHALL BE EPOXY COATED.
3. RUSTICATION DETAIL SHOWN ON DRAWING NO. S-7.
4. ANCHORAGE DETAILS FOR METAL BRIDGE RAIL (HANDRAIL) NOT SHOWN FOR CLARITY PURPOSES. SEE DRAWING NO. S-11 FOR DETAILS.
5. REINFORCING STEEL SHOWN NORMAL TO THE PRECAST CONCRETE WALL FOOTING IN THE ABOVE DETAIL. REINFORCING STEEL, OF SAME BAR SIZES SHOWN, SHALL BE FLARED WITHIN THE RESPECTIVE PRECAST CONCRETE WALL FOOTINGS DUE TO SKEW DIMENSIONS AND SHALL BE SUBMITTED FOR REVIEW AND APPROVAL BY THE ENGINEER.
6. PRECAST CONCRETE BARRIERS AS PART OF THE WINGWALL STEMS. PRECAST CONCRETE BARRIERS SHALL BE CAST AT MANUFACTURING PLANT PRIOR TO DELIVERY OF PRECAST WINGWALL STEM SEGMENTS TO THE SITE.
7. THE CONTRACTOR SHALL MANUFACTURE AND CONSTRUCT THE PRECAST CONCRETE BARRIERS SET ON TOP OF THE WINGWALLS IN ACCORDANCE WITH THE SPECIAL PROVISIONS FOR "PRECAST SUBSTRUCTURE ELEMENTS", AND TO THE DIMENSIONS SHOWN IN THESE PLANS.

ADDENDUM NO. 2

REV.	DATE	REVISION DESCRIPTION	SHEET NO.
1	04/19/2019	ADDENDUM NO. 2 - PRECAST CONCRETE BRIDGE BARRIER	04.08.A2

THE INFORMATION, INCLUDING ESTIMATED QUANTITIES OF WORK, SHOWN ON THESE SHEETS IS BASED ON LIMITED INVESTIGATIONS BY THE STATE AND IS IN NO WAY WARRANTED TO INDICATE THE CONDITIONS OF ACTUAL QUANTITIES OF WORK WHICH WILL BE REQUIRED.

Plotted Date: 4/24/2019

DESIGNER/DRAFTER: C. MERINO
CHECKED BY: D. ICON
SCALE AS NOTED

STATE OF CONNECTICUT
DEPARTMENT OF TRANSPORTATION

Filename: ...\SB_MSH_0044-0157_S-8_A02.dgn

SIGNATURE/BLOCK:
STATE OF CONNECTICUT · ABHIJIT L. GOLE · No. 30079 · PROFESSIONAL ENGINEER
CDR Group, Inc.
2080 Silas Deane Highway
Rocky Hill, CT 06067

PROJECT TITLE:
REPLACEMENT OF BRIDGE NO. 06676, US ROUTE 1 OVER UNNAMED BROOK

TOWN: **EAST LYME**

DRAWING TITLE: **PRECAST WINGWALL CONSTRUCTION DETAILS**

PROJECT NO. **44-157**
DRAWING NO. **S-8**
SHEET NO. **04.08.A2**

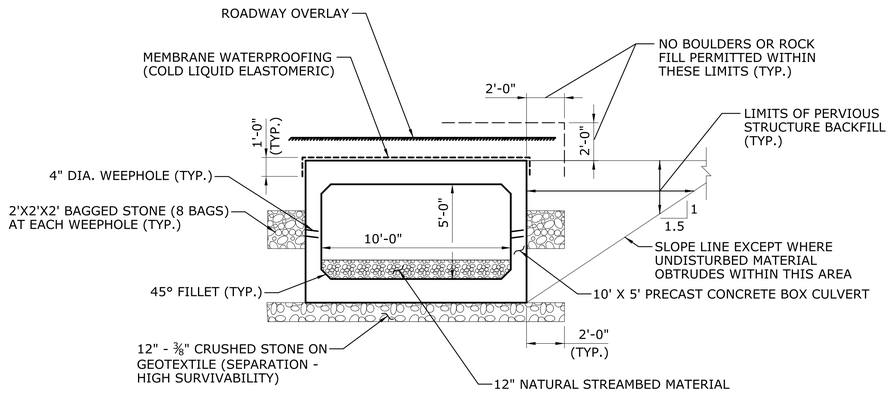

PRECAST CONCRETE BOX CULVERT TYPICAL SECTION

SCALE: ¼" = 1'

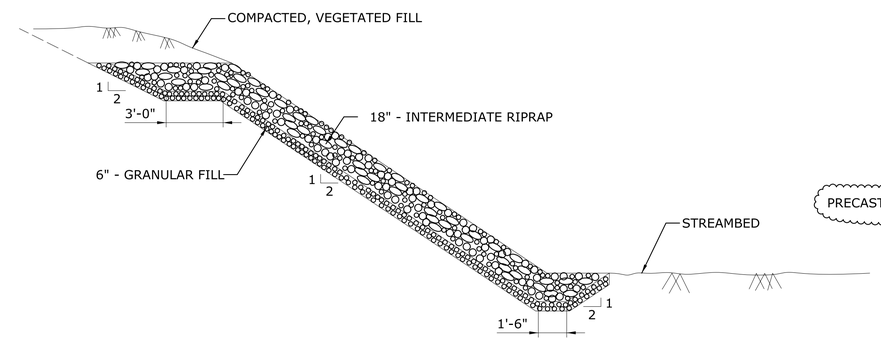

TYPICAL RIPRAP INSTALLATION DETAIL

SCALE: ¼" = 1'

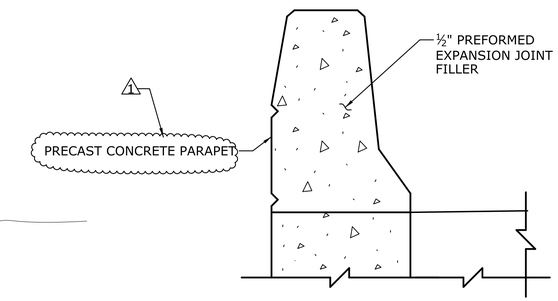

JOINT TREATMENT AT CONCRETE PARAPET

SCALE: 1" = 1'

NOTE: COST FOR SEALING PARAPET JOINTS TO BE INCLUDED FOR PAYMENT WITH ITEM PRECAST SUBSTRUCTURE ELEMENTS

1

PRECAST CONCRETE BOX CULVERT NOTES:

1. THE CONTRACTOR SHALL MANUFACTURE AND CONSTRUCT THE PRECAST CONCRETE BOX CULVERT IN ACCORDANCE WITH THE SPECIAL PROVISIONS FOR "10' X 5' PRECAST CONCRETE BOX CULVERT" AND TO THE DIMENSIONS AND DETAILS SHOWN ON THESE PLANS.
2. ALL INSERTS OR HOLES CAST INTO THE CULVERT SECTIONS FOR THE SOLE PURPOSE OF HANDLING AND SETTING THE UNITS SHALL BE GROUTED OVER TO A SMOOTH FINISH UPON COMPLETION OF THE WORK AND TO THE SATISFACTION OF THE ENGINEER.
3. NON-SHRINK GROUT SHALL BE USED TO GROUT THE REINFORCEMENT BETWEEN THE BOTTOM SLAB OF THE PRECAST CONCRETE BOX CULVERT AND PRECAST CONCRETE CUTOFF WALL.
4. THE COST OF FURNISHING AND INSTALLING INSERTS SHALL BE INCLUDED IN THE ITEM "10' x 5' PRECAST CONCRETE BOX CULVERT".
5. ALL REINFORCEMENT TO HAVE 2" COVER UNLESS OTHERWISE NOTED.

PRECAST CONCRETE U-TYPE WINGWALL / CUTOFF / RETURN WALL NOTES:

1. THE CONTRACTOR SHALL MANUFACTURE AND CONSTRUCT THE PRECAST CONCRETE WINGWALLS AND CUTOFF WALLS/RETURN WALLS IN ACCORDANCE WITH THE SPECIAL PROVISIONS FOR "PRECAST SUBSTRUCTURE ELEMENTS", AND TO THE DIMENSIONS AND DETAILS SHOWN IN THESE PLANS.
2. ALL INSERTS OR HOLES CAST INTO THE WINGWALL AND CUTOFF WALL SECTIONS FOR THE SOLE PURPOSE OF HANDLING AND SETTING THE UNITS SHALL BE GROUTED OVER TO A SMOOTH FINISH UPON COMPLETION OF THE WORK, AND TO THE SATISFACTION OF THE ENGINEER.
3. ALL REINFORCEMENT TO HAVE 2" COVER UNLESS OTHERWISE NOTED.
4. PAYMENT FOR DRILLING, NON-SHRINK GROUT, AND #6 X 1'-6" LONG ANCHOR BARS (DOWELS) SHALL BE INCLUDED AT THE PAY ITEM "DRILLING HOLES AND GROUTING DOWELS." REFER TO SPECIAL PROVISION FOR DRILLING HOLES AND GROUTING DOWELS FOR INSTALLATION INSTRUCTIONS.

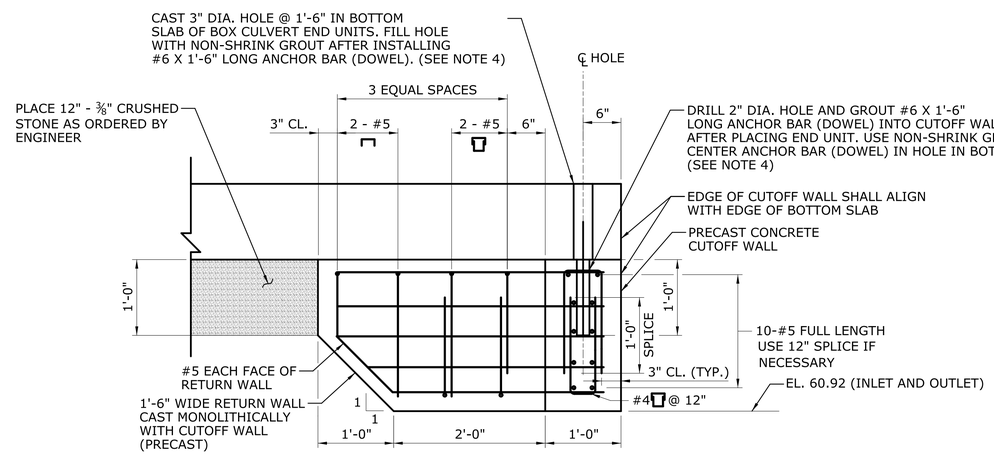

PRECAST CUTOFF AND RETURN WALL DETAIL

SCALE: 1" = 1'

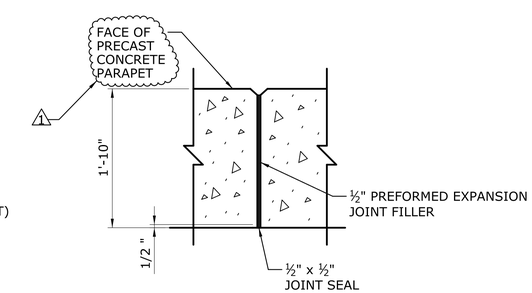

SECTION THROUGH PARAPET JOINT

SCALE: 1" = 1'

1

ADDENDUM NO. 2

REV.	DATE	REVISION DESCRIPTION	SHEET NO.
1	04/19/2019	ADDENDUM NO. 2 - PRECAST CONCRETE BRIDGE BARRIER	04.10.A2

THE INFORMATION, INCLUDING ESTIMATED QUANTITIES OF WORK, SHOWN ON THESE SHEETS IS BASED ON LIMITED INVESTIGATIONS BY THE STATE AND IS IN NO WAY WARRANTED TO INDICATE THE CONDITIONS OF ACTUAL QUANTITIES OF WORK WHICH WILL BE REQUIRED.

Plotted Date: 4/24/2019

DESIGNER/DRAFTER: C. MERINO
CHECKED BY: D. ICON
SCALE AS NOTED

STATE OF CONNECTICUT
DEPARTMENT OF TRANSPORTATION

Filename: ...\SB_MSH_0044-0157_S-10_A02.dgn

SIGNATURE/BLOCK:
STATE OF CONNECTICUT ABRAHAM L. GRUPP No. 30079 LICENSED PROFESSIONAL ENGINEER
CDR Group, Inc.
2080 Silas Deane Highway
Rocky Hill, CT 06067

PROJECT TITLE:
REPLACEMENT OF BRIDGE NO. 06676, US ROUTE 1 OVER UNNAMED BROOK

TOWN: **EAST LYME**

DRAWING TITLE: **MISCELLANEOUS DETAILS**

PROJECT NO. **44-157**
DRAWING NO. **S-10**
SHEET NO. **04.10.A2**