04 - STRUCTURE
INDEX OF DRAWINGS

DRAWING NUMBER	DRAWING TITLE	DRAWING NUMBER	DRAWING TITLE	SHEET NUMBER	
S-01	STRUCTURE INDEX OF DRAWINGS				
S-02	STRUCTURE PLAN, SECTION AND ELEVATION				
S-03	HANDLING WATER PLAN				
S-04	END SECTION REPAIR DETAILS				

Jay A Costello

Digitally signed by Jay A Costello
DN: E=jcostello@wmcengineers.com, CN=Jay A Costello, O=WMC Consulting Engineers, L=Newington, S=Connecticut, C=US
Date: 2018.11.20 16:35:55-05'00'

REV.	DATE	REVISION DESCRIPTION	SHEET NO.

THE INFORMATION, INCLUDING ESTIMATED QUANTITIES OF WORK, SHOWN ON THESE SHEETS IS BASED ON LIMITED INVESTIGATIONS BY THE STATE AND IS IN NO WAY WARRANTED TO INDICATE THE CONDITIONS OF ACTUAL QUANTITIES OF WORK WHICH WILL BE REQUIRED.

Plotted Date: 11/20/2018

DESIGNER/DRAFTER: **D. BARBER**
CHECKED BY: **K. ELDER**
SCALE AS NOTED

STATE OF CONNECTICUT
DEPARTMENT OF TRANSPORTATION

Filename: ..\04.01_Structure Index of Drawings.dgn

SIGNATURE/BLOCK:
WMC Consulting Engineers
87 Holmes Road
Newington, CT 06111

PROJECT TITLE:
REHABILITATION OF BRIDGE NO. 06728, ROUTE 9 OVER POLE BRIDGE BROOK

TOWN: **HADDAM**

DRAWING TITLE: **STRUCTURE INDEX OF DRAWINGS**

PROJECT NO. **60-158**
DRAWING NO. **S-01**
SHEET NO. **04.01**

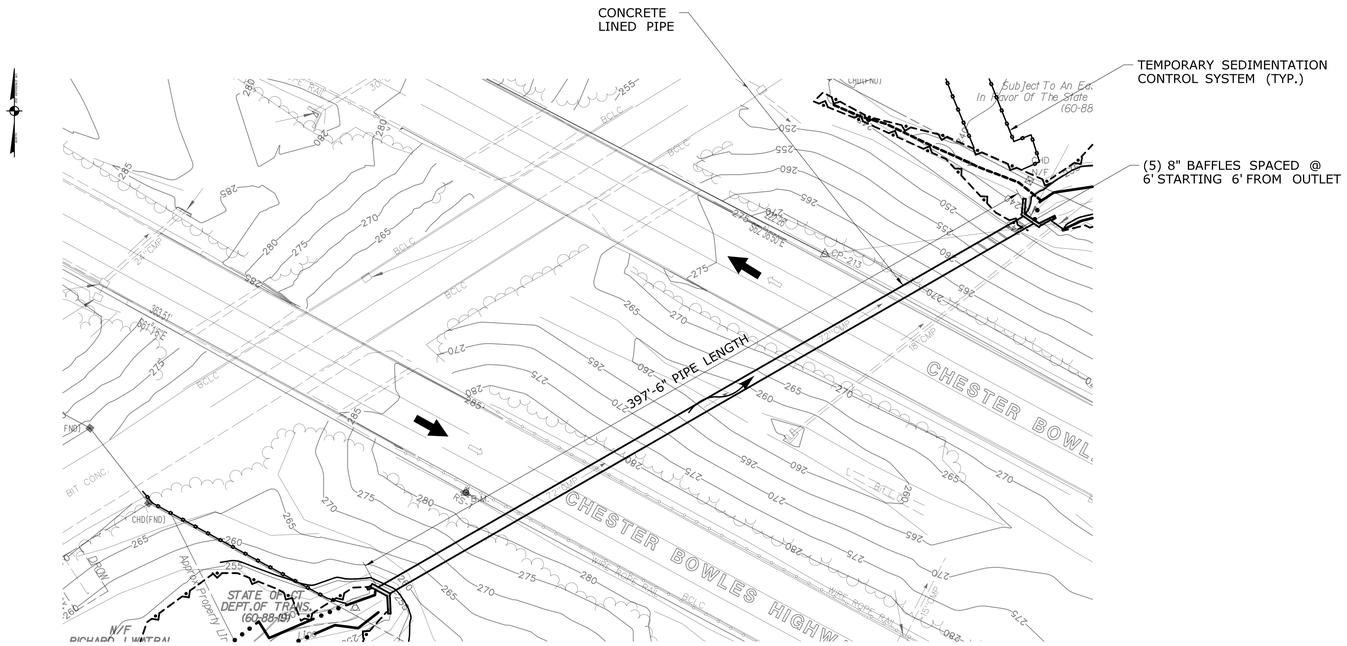

STRUCTURE PLAN

SCALE: 1" = 40'

GENERAL NOTES:

SPECIFICATIONS: CONNECTICUT DEPARTMENT OF TRANSPORTATION FORM 817 (2016).), SUPPLEMENTAL SPECIFICATIONS DATED JANUARY 2018.

DESIGN SPECIFICATIONS: AASHTO LRFD BRIDGE DESIGN SPECIFICATIONS (6TH EDITION) AS SUPPLEMENTED BY THE CONNECTICUT DEPARTMENT OF TRANSPORTATION BRIDGE DESIGN MANUAL (2003) UP TO AND INCLUDING 2011 REVISIONS.

ALLOWABLE DESIGN STRESSES:
CLASS "S" CONCRETE; BASED ON F'c = 4000 P.S.I.

REINFORCEMENT (ASTM A615 GRADE 60) fy = 60,000 P.S.I.
THE SPECIFIED CONCRETE STRENGTH USED IN DESIGN "F'c" OF THE CONCRETE COMPONENTS IS NOTED ABOVE. THE MINIMUM COMPRESSIVE STRENGTH OF THE CONCRETE IN THE COMPONENTS SHALL CONFORM TO THE REQUIREMENTS OF SECTION 6.01, "CONCRETE FOR STRUCTURES" OF THE FORM 817.

LIVE LOAD: HL-93

FUTURE PAVING ALLOWANCES: NONE

DIMENSIONS: WHEN DIMENSIONS ARE GIVEN TO LESS THAN THREE DECIMAL PLACES, THE OMITTED DIGITS SHALL BE ASSUMED TO BE ZERO.

EXISTING DIMENSIONS: DIMENSIONS OF THE EXISTING STRUCTURE SHOWN ON THESE PLANS ARE FOR GENERAL REFERENCE ONLY. THEY HAVE BEEN TAKEN FROM THE ORIGINAL DESIGN DRAWING AND ARE NOT GUARANTEED. THE CONTRACTOR SHALL TAKE ALL FIELD MEASUREMENTS NECESSARY TO ASSURE PROPER FIT OF THE FINISHED WORK AND SHALL ASSUME FULL RESPONSIBILITY FOR THEIR ACCURACY

UNCONFINED IN-STREAM ACTIVITY: ACTIVITIES MUST BE LIMITED TO THE TIME PERIOD JUNE 1 THROUGH SEPTEMBER 30.

PUMPING ACTIVITIES: THE PUMPS REQUIRED SHOULD BE BASED ON THE EXPECTED FLOW DURING THE TIME OF YEAR RESTRICTION AND NOT THE TWO (2) YEAR STORM. THE CONTRACTOR PUMP PLAN MUST BE SUBMITTED TO THE DISTRICT FOR REVIEW AND APPROVAL.

PIPE LINING: CONTRACTOR SHALL BE REQUIRED TO PROVIDE SHOP DRAWINGS AND DESIGN CALCULATIONS PREPARED AND SIGNED BY A PROFESSIONAL ENGINEER LICENSED IN THE STATE OF CONNECTICUT. WORK TO BE PAID FOR UNDER ITEM "CURED-IN-PLACE PIPE LINING" (SEE SPECIAL PROVISIONS).

CONCRETE NOTES:

CLASS "S" CONCRETE: CLASS "S" CONCRETE SHALL BE USED FOR REPAIR WORK AS REQUIRED

REINFORCEMENT: ALL REINFORCEMENT SHALL BE ASTM A615 GRADE 60. THESE PLANS ARE DETAILED WITH ENGLISH DESIGNATION OF REINFORCING. THE DESIGNATION IS BASED ON THE DIAMETER OF THE BAR IN INCHES.

EXPOSED EDGES: EXPOSED EDGES OF CONCRETE SHALL BE BEVELED 1"X1" UNLESS DIMENSIONED OTHERWISE.

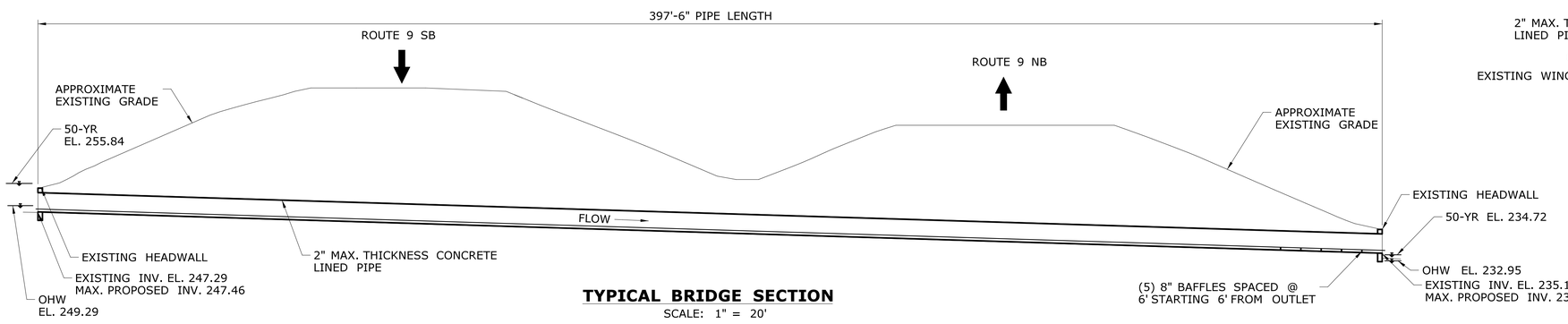

TYPICAL BRIDGE SECTION

SCALE: 1" = 20'

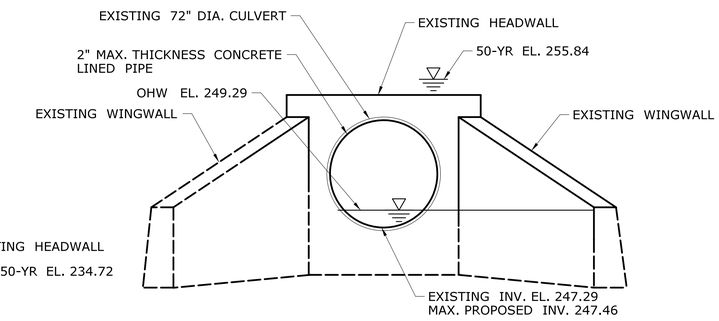

UPSTREAM ELEVATION

SCALE: 1/4" = 1'-0"

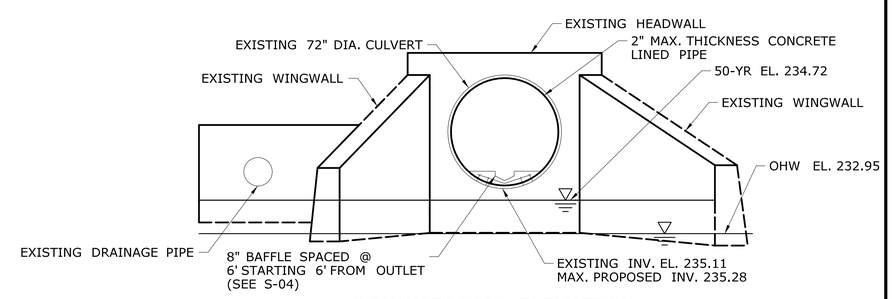

DOWNSTREAM ELEVATION

SCALE: 1/4" = 1'-0"

HYDRAULIC DATA	
DRAINAGE AREA	0.48 SQ. MILES
DESIGN FREQUENCY	50 YEAR
DESIGN DISCHARGE	290 C.F.S.
AVERAGE DAILY FLOW ELEVATION	247.69 FT ESTIMATED
UPSTREAM DESIGN WATER SURFACE ELEVATION	255.84 FT.
DOWNSTREAM DESIGN WATER SURFACE ELEVATION	234.72 FT.
(NOTE- NO SCOUR INFORMATION FOR HYDRAULIC DATA TABLE AS THIS IS A CULVERT	

NOTICE TO BRIDGE INSPECTORS

THE DEPARTMENT'S BRIDGE SAFETY PROCEDURES REQUIRE THIS BRIDGE TO BE INSPECTED FOR, BUT NOT LIMITED TO, ALL APPROPRIATE COMPONENTS INDICATED IN THE GOVERNING MANUALS FOR BRIDGE INSPECTION. ATTENTION MUST BE GIVEN TO INSPECTING THE FOLLOWING SPECIAL COMPONENTS AND DETAILS (THE LISTING OF COMPONENTS FOR SPECIAL ATTENTION SHALL NOT BE CONSTRUDE TO REDUCE THE IMPORTANCE OF THE INSPECTION OF ANY OTHER COMPONENT OF THE STRUCTURE). THE FREQUENCY OF INSPECTION OF THIS STRUCTURE SHALL BE IN ACCORDANCE WITH THE GOVERNING MANUALS FOR BRIDGE INSPECTION, UNLESS OTHERWISE DIRECTED BY THE ENGINEER OF BRIDGES AND STRUCTURES, OR NOTED BELOW.

COMPONENT OR DETAIL	BRIDGE SHEET REF.
NONE	NONE

QUANTITIES		
ITEM	UNIT	QUANTITY
CONFINED SPACE HEALTH AND SAFETY	L.S.	L.S.
HANDLING WATER	L.S.	L.S.
CLASS "S" CONCRETE	C.F.	15
CRACK REPAIR	L.F.	5
DEFORMED STEEL BARS	LBS	200
DRILLING AND GROUTING REINFORCING BARS	L.F.	5
PRESSURE GROUTING	C.Y.	10
CURED-IN-PLACE PIPE LINING	L.F.	398
TEMPORARY EARTH RETAINING SYSTEM	S.F.	1800

REV.	DATE	REVISION DESCRIPTION	SHEET NO.

THE INFORMATION, INCLUDING ESTIMATED QUANTITIES OF WORK, SHOWN ON THESE SHEETS IS BASED ON LIMITED INVESTIGATIONS BY THE STATE AND IS IN NO WAY WARRANTED TO INDICATE THE CONDITIONS OF ACTUAL QUANTITIES OF WORK WHICH WILL BE REQUIRED.

Plotted Date: 11/20/2018

DESIGNER/DRAFTER: D. BARBER
CHECKED BY: K. ELDER
SCALE AS NOTED

STATE OF CONNECTICUT
DEPARTMENT OF TRANSPORTATION

Filename: ...\04.02_Structure Plan, Section and Elevation.dgn

SIGNATURE/BLOCK:
WMC Consulting Engineers
87 Holmes Road
Newington, CT 06111

PROJECT TITLE:
REHABILITATION OF BRIDGE NO. 06728, ROUTE 9 OVER POLE BRIDGE BROOK

TOWN: HADDAM

DRAWING TITLE: STRUCTURE PLAN, SECTION AND ELEVATION

PROJECT NO. 60-158
DRAWING NO. S-02
SHEET NO. 04.02

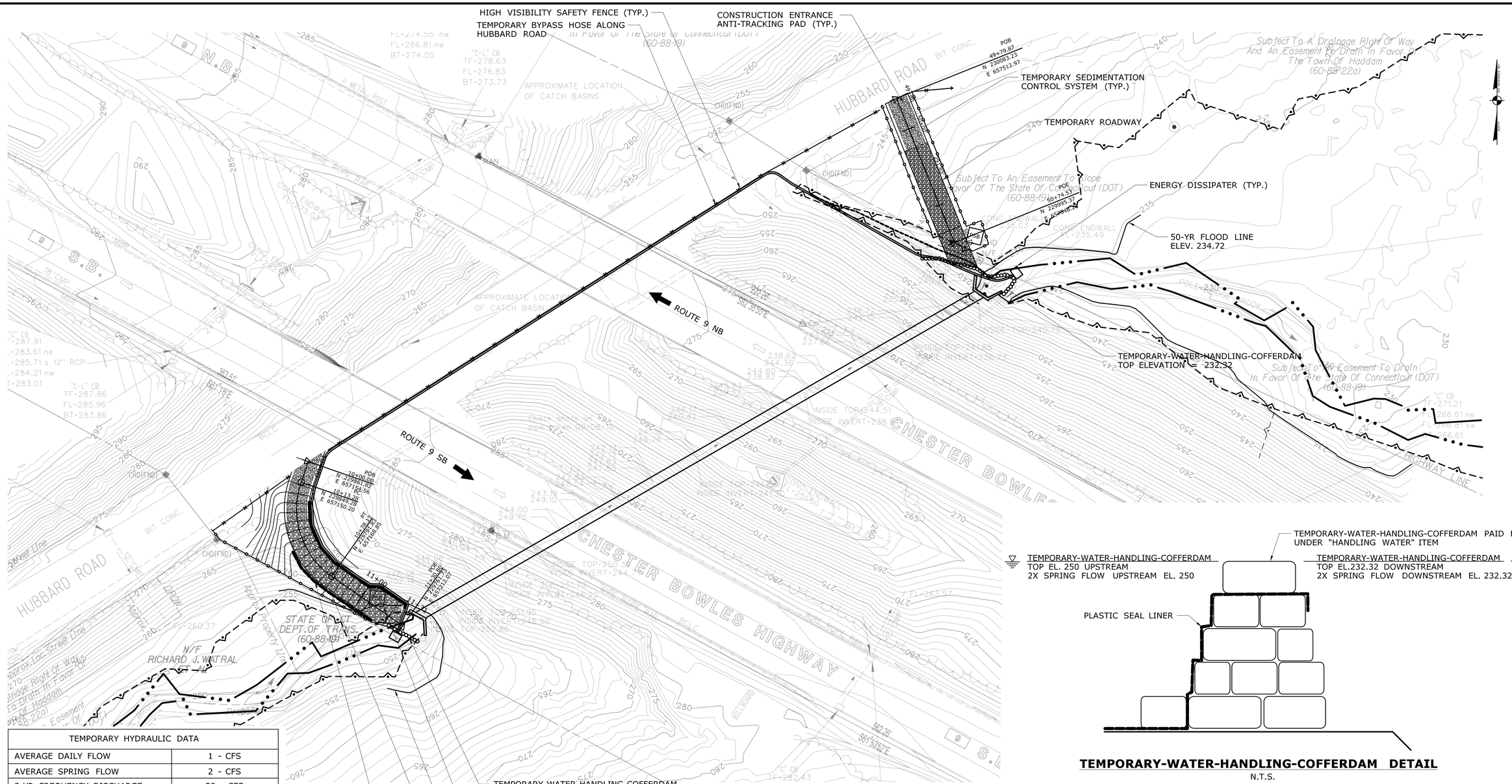

HANDLING WATER

SCALE: 1" = 30'

TEMPORARY-WATER-HANDLING-COFFERDAM DETAIL

N.T.S.

TEMPORARY HYDRAULIC DATA	
AVERAGE DAILY FLOW	1 - CFS
AVERAGE SPRING FLOW	2 - CFS
2-YR FREQUENCY DISCHARGE	30 - CFS
TEMPORARY DESIGN DISCHARGE	4 - CFS (1800 gpm)
TEMPORARY DESIGN FREQUENCY	2 x AVERAGE SPRING FLOW
TEMPORARY WATER SURFACE ELEVATION UPSTREAM	250 FT. (MAX. HEAD AT TEMPORARY-WATER-HANDLING-COFFERDAM)
TEMPORARY WATER SURFACE ELEVATION DOWNSTREAM	232.32 FT.

NOTE:
UPSTREAM TEMPORARY-WATER-HANDLING-COFFERDAM TOP ELEVATION SHALL BE 2 FT ABOVE STREAMBED TO CREATE SUMP FOR PUMPING (TOP ELEVATION = 250').

SCALE 1" = 30'

60 30 0 60

SEQUENCING NOTES:

1. MOBILIZE AND INSTALL CONSTRUCTION SIGNS.
2. INSTALL SEDIMENTATION AND EROSION CONTROL.
3. PERFORM NECESSARY CLEARING AND GRUBBING.
4. CONSTRUCT TEMPORARY ROADWAY UPSTREAM AND DOWNSTREAM.
5. INSTALL TEMPORARY-WATER-HANDLING-COFFERDAM.
6. INSTALL TEMPORARY BYPASS HOSE AND PUMP POLE BRIDGE BROOK.
7. CLEAN AND RINSE INSIDE OF EXISTING 72" PIPE.
8. REPAIR AND RELINE THE EXISTING PIPE AND ENDWALLS.
9. REMOVE TEMPORARY-WATER-HANDLING-COFFERDAM AND TEMPORARY BYPASS HOSE.
10. PERFORM EMBANKMENT GRADING.
11. RESTORE STREAMBED AND SEED/PLANT PER PLAN.

REV.	DATE	REVISION DESCRIPTION	SHEET NO.

THE INFORMATION, INCLUDING ESTIMATED QUANTITIES OF WORK, SHOWN ON THESE SHEETS IS BASED ON LIMITED INVESTIGATIONS BY THE STATE AND IS IN NO WAY WARRANTED TO INDICATE THE CONDITIONS OF ACTUAL QUANTITIES OF WORK WHICH WILL BE REQUIRED.

Plotted Date: 11/20/2018

DESIGNER/DRAFTER: D. BARBER
CHECKED BY: K. ELDER
SCALE AS NOTED

STATE OF CONNECTICUT
DEPARTMENT OF TRANSPORTATION

Filename: ..\04.03_Handling Water Plans .dgn

SIGNATURE/BLOCK:
WMC Consulting Engineers
87 Holmes Road
Newington, CT 06111

PROJECT TITLE:
REHABILITATION OF BRIDGE NO. 06728, ROUTE 9 OVER POLE BRIDGE BROOK

TOWN: HADDAM

DRAWING TITLE: HANDLING WATER PLANS

PROJECT NO. 60-158
DRAWING NO. S-03
SHEET NO. 04.03

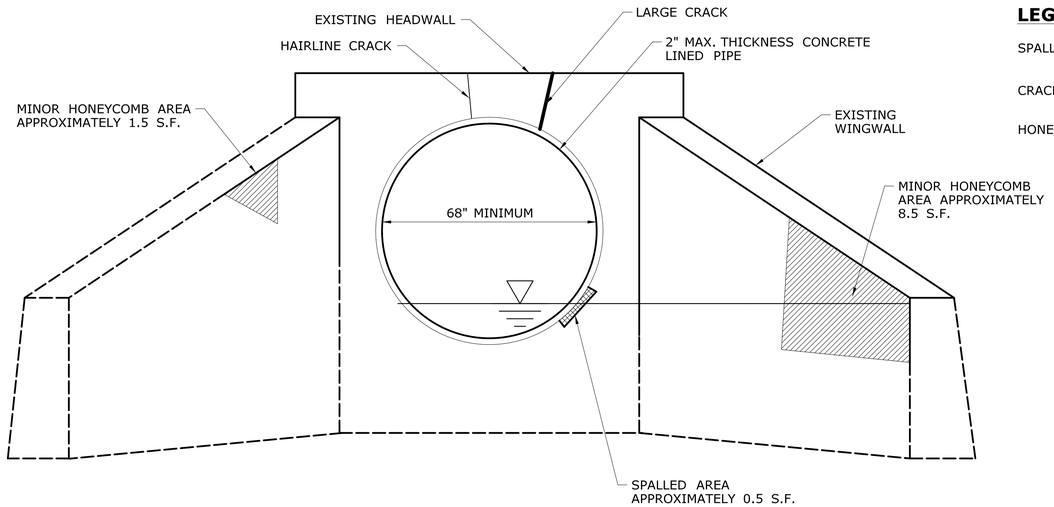

UPSTREAM ELEVATION

SCALE: 1/2" = 1'-0"

LEGEND

SPALLED AREA

CRACK

HONEYCOMB AREA

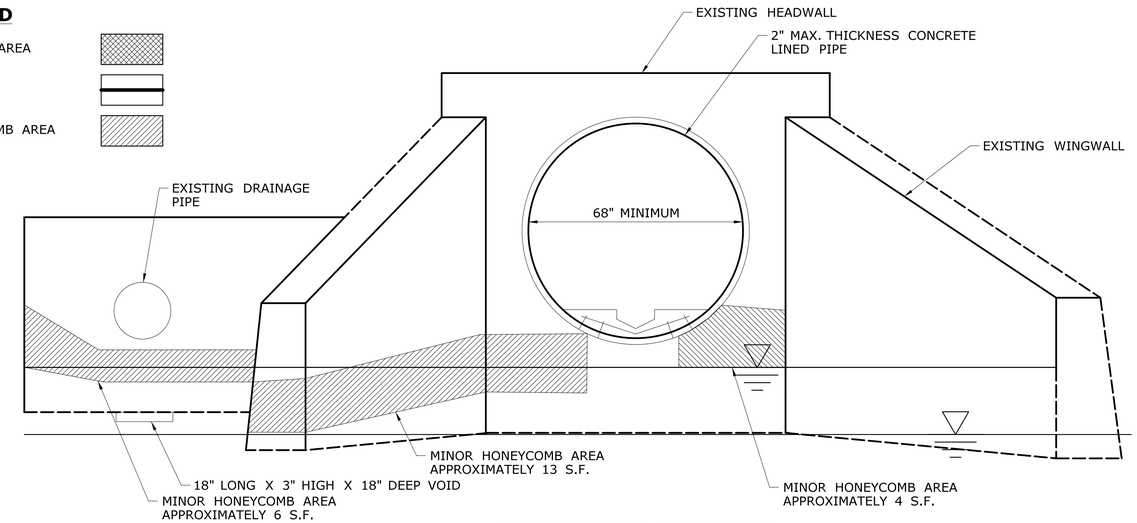

DOWNSTREAM ELEVATION

SCALE: 1/2" = 1'-0"

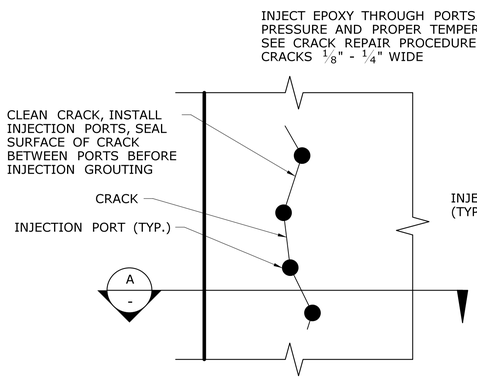

ELEVATION

CRACKS 1/8"-1/4" WIDE

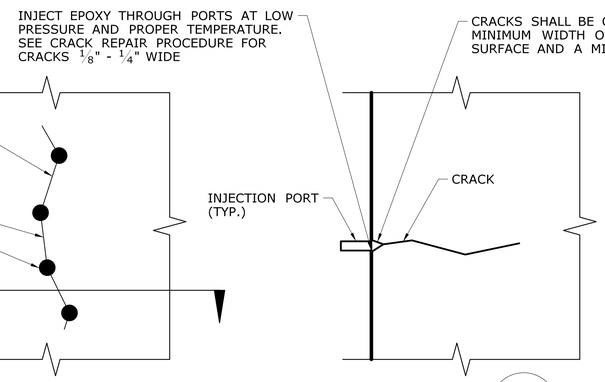

SECTION A -

CRACK REPAIR DETAIL

N.T.S.

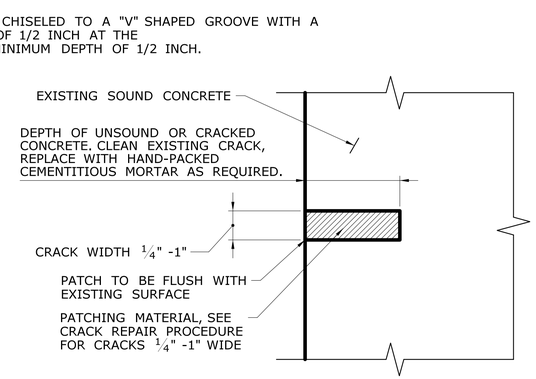

SECTION VIEW

CRACKS 1/4"-1" WIDE

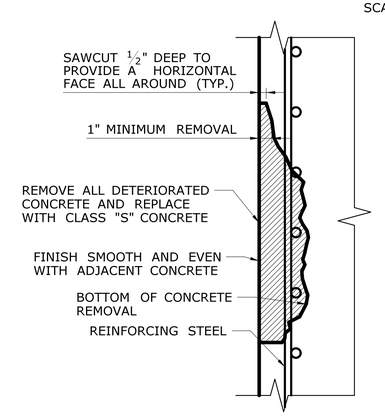

CLASS "S" PATCH REPAIR

N.T.S.

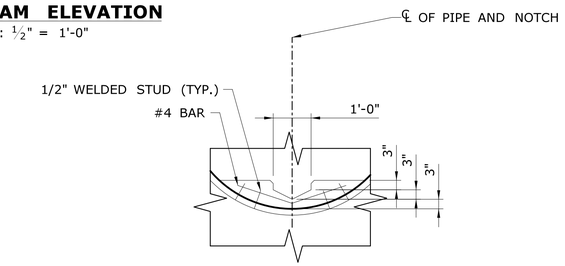

TYPICAL BAFFLE NOTCH DETAIL

SCALE: 1/2" = 1'-0"

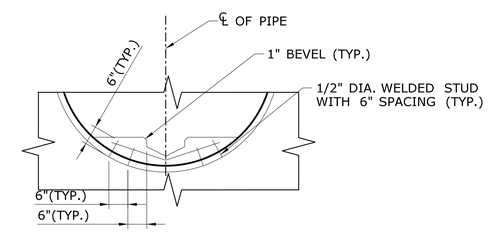

OUTLET BAFFLE DETAIL

SCALE: 1/2" = 1'-0"

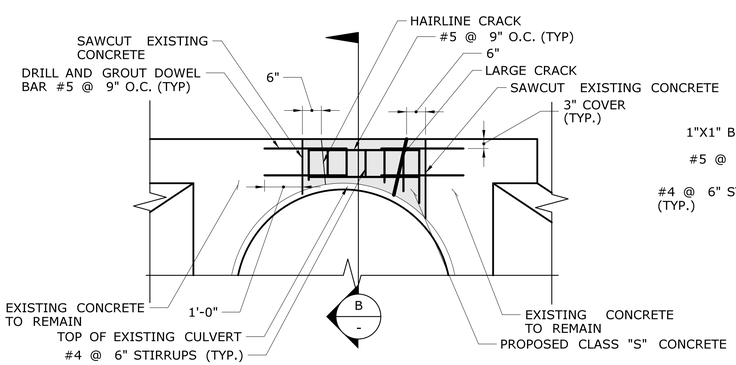

ELEVATION

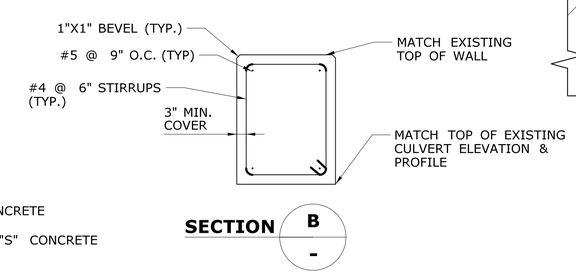

SECTION B -

HEADWALL REPAIR DETAIL ELEVATION

SCALE: 1/2" = 1'-0"

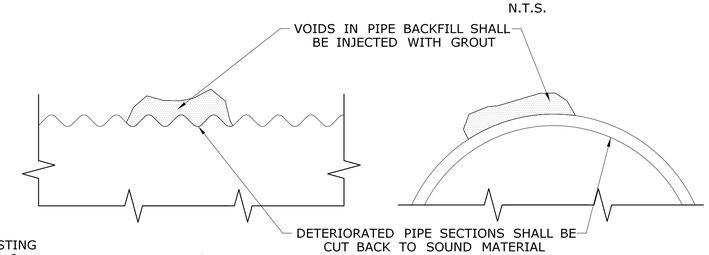

NOTE:
WORK TO BE PAID UNDER "PRESSURE GROUTING"

PIPE REPAIR DETAILS

N.T.S.

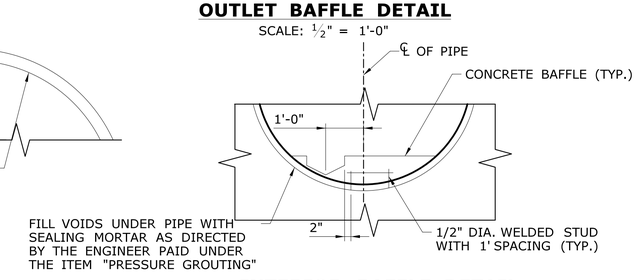

INTERIOR BAFFLE DETAIL

SCALE: 1/2" = 1'-0"

NOTE:

BAFFLES ARE TO BE MADE FROM CEMENTITIOUS FIBER REINFORCED MORTAR.

REV.	DATE	REVISION DESCRIPTION	SHEET NO.

THE INFORMATION, INCLUDING ESTIMATED QUANTITIES OF WORK, SHOWN ON THESE SHEETS IS BASED ON LIMITED INVESTIGATIONS BY THE STATE AND IS IN NO WAY WARRANTED TO INDICATE THE CONDITIONS OF ACTUAL QUANTITIES OF WORK WHICH WILL BE REQUIRED.

Plotted Date: 11/20/2018

DESIGNER/DRAFTER: D. BARBER
CHECKED BY: K. ELDER
SCALE AS NOTED

STATE OF CONNECTICUT
DEPARTMENT OF TRANSPORTATION

Filename: ...\04.04_End Section Repair Details.dgn

SIGNATURE/BLOCK:
WMC Consulting Engineers
87 Holmes Road
Newington, CT 06111

PROJECT TITLE:
REHABILITATION OF BRIDGE NO. 06728, ROUTE 9 OVER POLE BRIDGE BROOK

TOWN: HADDAM

DRAWING TITLE:
END SECTION AND PIPE REPAIR DETAILS

PROJECT NO. 60-158
DRAWING NO. S-04
SHEET NO. 04.04