SUBSET 20 - FOR INFORMATION ONLY EXISTING 10A BUILDING

INDEX OF DRAWINGS

DRAWING NUMBER	DRAWING TITLE	DRAWING NUMBER	DRAWING TITLE
FIO-01	INDEX OF DRAWINGS	FIO-20	FOUNDATION DETAILS (BASE PLATES)
FIO-02	COVER PAGE	FIO-21	COVER PAGE
FIO-02	COVER PAGE	FIO-22	MATERIAL SPECIFICATIONS
FIO-03	GENERAL NOTES	FIO-23	PART LOCATIONS & LAYOUT
FIO-04	MATERIAL SPECIFICATIONS	FIO-24	CONNECTION DETAILS
FIO-05	FRONT PROFILE (GRID)	FIO-25	ANCHOR HOLE LAYOUT
FIO-06	FRONT PROFILE (END RAFTERS)	FIO-26	COVER PAGE
FIO-07	FRONT PROFILE (MID RAFTERS 15' - BAYS)	FIO-27	PART LOCATIONS & LAYOUT
FIO-08	FRONT PROFILE (MID RAFTERS - 10' BAYS)	FIO-28	CONNECTION DETAILS
FIO-09	FRONT PROFILE (MAIN COVER DETAIL	FIO-29	MATERIAL SPECIFICATIONS
FIO-10	SIDE PROFILE	FIO-30	SPACE FRAME RENDERING, FOOTING DETAIL/NOTES
FIO-11	TOP PROFILE		
FIO-12	DETAIL LOCATION CALLOUT		
FIO-13	CONNECTION DETAILS		
FIO-14	CONNECTION DETAILS		
FIO-15	CONNECTION DETAILS		
FIO-16	BASE CONNECTION DETAILS		
FIO-17	CABLE LEMGTH DETAILS		
FIO-18	SWAY CABLE DETAILS		
FIO-19	CONDUIT ASSEMBLEY		

NEW SHEET ADDED BY ADDENDUM NO. 2

FOR INFORMATION ONLY

REV.	DATE	REVISION DESCRIPTION
-	-	-
-	-	-
-	-	-
-	-	-
-	-	-
-	-	-
-	-	-

THE INFORMATION, INCLUDING ESTIMATED QUANTITIES OF WORK, SHOWN ON THESE SHEETS IS BASED ON LIMITED INVESTIGATIONS BY THE STATE AND IS IN NO WAY WARRANTED TO INDICATE THE CONDITIONS OF ACTUAL QUANTITIES OF WORK WHICH WILL BE REQUIRED.

NOT TO SCALE

STATE OF CONNECTICUT
DEPARTMENT OF TRANSPORTATION

SIGNATURE/ BLOCK:

PROJECT TITLE:
NEW HAVEN RAIL YARD FACILITIES IMPROVEMENTS WEST END YARD

TOWN: **NEW HAVEN**

DRAWING TITLE: **EXISTING 10A BULDING INDEX OF DRAWINGS**

PROJECT NO. **0300-0138**

DRAWING NO. **FIO-01**

SHEET NO. **20.01.A2**

T083HKS014080WF
83' x 80' - 0" TRUSS HOUSE STYLE HK

NOTE:

ALL DOORS MUST BE CLOSED AND SECURED DURING HIGH WIND EVENTS (WIND SPEEDS > 70 MPH)

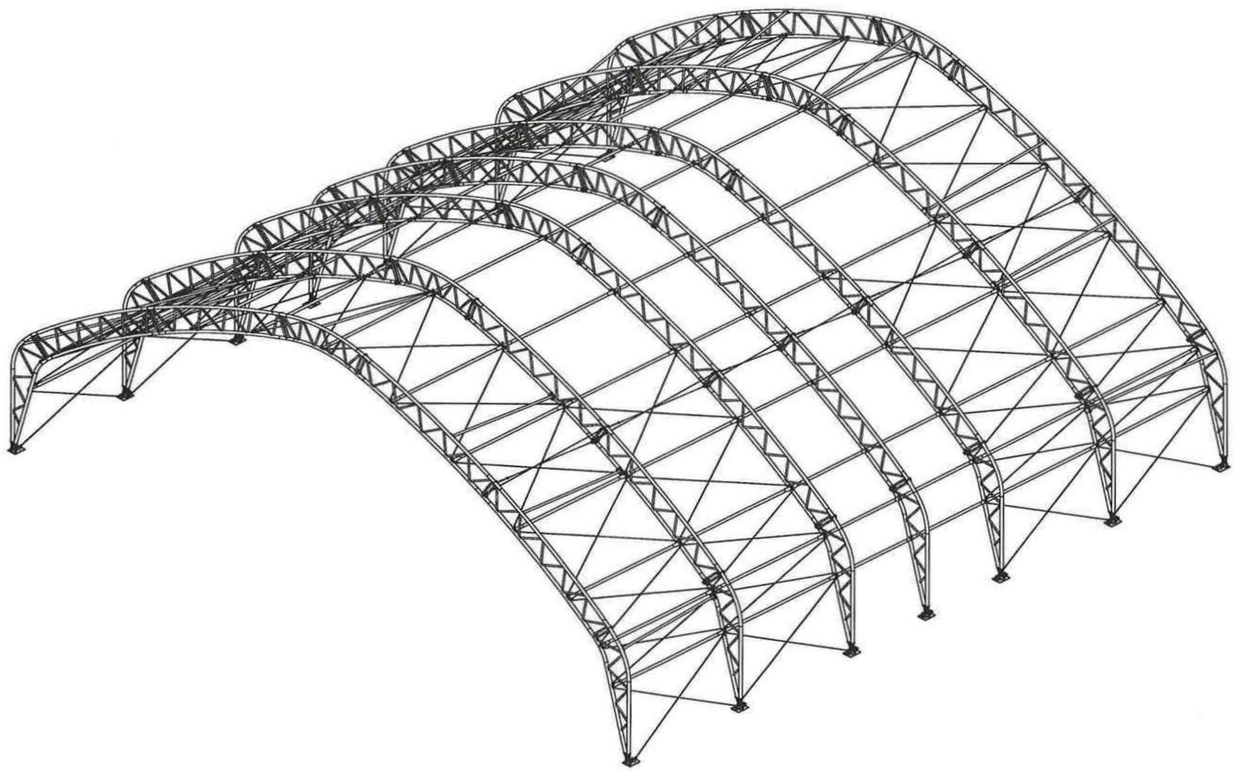

Content Guide:

[A1-1.0] .....COVER PAGE
[B1-1.0] .....GENERAL NOTES
[C1-1.0] .....MATERIAL SPECIFICATIONS
[D1-1.0] .....FRONT PROFILE (GRID)
[D2-1.0] .....FRONT PROFILE (END RAFTERS)
[D3-1.0] .....FRONT PROFILE (MID RAFTERS; 15' BAYS)
[D4-1.0] .....FRONT PROFILE (MID RAFTERS; 10' BAYS)
[D5-1.0] .....FRONT PROFILE (OVER THE TOP)
[E1-1.0] .....SIDE PROFILE
[F1-1.0] .....TOP PROFILE
[G1-1.0] .....DETAIL LOCATION CALL OUTS
[G2-1.0] .....CONNECTION DETAILS
[G3-1.0] .....CONNECTION DETAILS
[G4-1.0] .....CONNECTION DETAILS
[G5-1.0] .....BASE CONNECTION DETAILS
[G6-1.0] .....CABLE DETAILS
[G7-1.0] .....CABLE LENGTH DETAILS
[G8-1.0] .....SWAY CABLE DETAILS
[G9-1.0] .....CONDUIT ASSEMBLY
[H1-1.0] .....FOUNDATION DETAILS (BASE PLATES)
[H2-1.0] .....FOUNDATION DETAILS (FOOT BRKT LAYOUTS)
[H3-1.0] .....FOUNDATION DETAILS (ANCHOR HOLES)
[J1-1.0] ..... PROTOTYPICAL REACTIONS
[K1-1.0].....ADDITIONAL INFORMATION

4/9/10

Developed By
A Division of Engineering Services & Products Co.
1440 18th Ave. SW
Dyersville, IA 52040
P 563.875.8112
F 563.875.2317
www.esapco.com/

Order Number: 4323239
Customer Number: 5970824

Naeem Akhter, PE, SE
Consulting Structural Engineer
7834 W 156th Street
Overland Park, KS 66223
(913) 685-2015 Off
(913) 685-2019 Fax

Structure SKU #: T083HKS014080WF
Structure Size: 83' W x 80' L x 37'- 8 3/16" H
Structure Description: HERCULES TRUSS ARCH
Customer Information: ENVIR HEALTH & SAFETY, P.O. BOX 28, SUFFIELD, CT 06078
Customer Contact Phone: 860-668-0736
Customer Contact: ART BOEHM
Page Title: COVER PAGE

PDMWorks Project: 4323239 ENVIR HEALTH & SAFETY

Drawings	
Drawn By: WJM	Creation Date: 3/16/2010

Revisions:

No	By:	Revision Date:
1	---	---
2	---	---
3	---	---

Sheet: A1-1.0

NEW SHEET ADDED BY ADDENDUM NO. 2

FOR INFORMATION ONLY

REV.	DATE	REVISION DESCRIPTION
-	-	-
-	-	-
-	-	-
-	-	-
-	-	-
-	-	-
-	-	-

THE INFORMATION, INCLUDING ESTIMATED QUANTITIES OF WORK, SHOWN ON THESE SHEETS IS BASED ON LIMITED INVESTIGATIONS BY THE STATE AND IS IN NO WAY WARRANTED TO INDICATE THE CONDITIONS OF ACTUAL QUANTITIES OF WORK WHICH WILL BE REQUIRED.

NOT TO SCALE

STATE OF CONNECTICUT
DEPARTMENT OF TRANSPORTATION

SIGNATURE/ BLOCK:

PROJECT TITLE: **NEW HAVEN RAIL YARD FACILITIES IMPROVEMENTS WEST END YARD**

TOWN: **NEW HAVEN**

DRAWING TITLE: **FOR INFORMATION ONLY**

PROJECT NO. **0300-0138**
DRAWING NO. **FIO-02**
SHEET NO. **20.02.A2**

GENERAL NOTES

GENERAL NOTES:

1. DESIGNED IN CONFORMANCE WITH THE STRUCTURAL PROVISIONS OF THE INTERNATIONAL BUILDING CODE, 2006 EDITION.

2. DESIGN LOADS:
   A. FLOOR LIVE LOAD: **N/A**
   B. ROOF LIVE LOAD: 5 PSF (FABRIC ROOF)
   C. ROOF SNOW LOADS:

   Pg (GROUND SNOW LOAD) = 30 PSF (ASSUMED)
   Ce (SNOW EXPOSURE FACTOR) = 1.0 (PARTIALLY EXPOSED TERRAIN CATEGORY C)
   Ct (THERMAL FACTOR) = 1.1
   Is (SNOW IMPORTANCE FACTOR) = 0.8 (CATEGORY I)
   Pf (FLAT ROOF SNOW LOAD) = 30.0 PSF
   Ps (SLOPED ROOF SNOW LOAD) = Cs Pf
   Cs (SLOPE FACTOR) = AS DETERMINED FOR GABLE OR ARCHED ROOF PER ASCE 7 (BALANCED AND UNBALANCED LOADING CONDITIONS CONSIDERED).

   SNOW DRIFTING FROM ADJACENT BUILDINGS, STRUCTURES, OR ANY OTHER HORIZONTAL SURFACES HAS NOT BEEN CONSIDERED.
   F
   D. WIND DESIGN DATA: (METHOD 2, ANALYTICAL PROCEDURE)
   V (BASIC WIND SPEED) = 110 MPH (ASSUMED)
   Kd (WIND DIRECTIONALITY FACTOR) = 0.85
   Iw (WIND IMPORTANCE FACTOR) = 0.77 (CATEGORY I)
   C (EXPOSURE CATEGORY) = **C** (ASSUMED)
   GCpi (INT. PRES. COEFF.) = +/-0.18 (ENCLOSED)
   Cp (EXT. PRES. COEFF.) = AS DETERMINED FOR GABLE OR ARCHED ROOF COMPONENTS AND CLADDING WIND PRESSURE: **N/A**

   WIND SPEED-UP EFFECTS AT ISOLATED HILLS, RIDGES, AND ESCARPMENTS CONSTITUTING ABRUPT CHANGES IN THE GENERAL TOPOGRAPHY, HAVE NOT BEEN CONSIDERED

   E. EARTHQUAKE DESIGN DATA: WIND LOAD CONTROLS DESIGN

3. THE TRUSSES ARE DESIGNED TO ACCOMMODATE LIMITED ADDITIONAL WEIGHT. ADDITIONAL LOADS, SUCH AS FOR LIGHTING, HEATING, AND VENTILATING EQUIPMENT, SHALL NOT EXCEED 750 LBS. PER ASSEMBLED TRUSS, WITHOUT THE WRITTEN APPROVAL OF THE DESIGN ENGINEER. LOADS SHALL BE APPLIED AT PANEL POINTS (POINTS OF CONTACT BETWEEN TRUSS WEB AND CHORD), AND SHALL BE DISTRIBUTED SO THAT NO MORE THAN 150 LBS. IS SUSPENDED FROM ANY SINGLE LOCATION.

FOUNDATION:

1. FOUNDATION AND ANCHORING SHALL BE ENGINEERED AND APPROVED BY A LOCALLY LICENSED STRUCTURAL ENGINEER TO ACCOUNT FOR THE PROTOTYPICAL REACTIONS SHOWN ON PAGE [J1.1.0].

GENERAL ABBREVIATIONS
TOS TOP OF STEEL / **TSL** TOP OF SLAB / **GALV.** GALVANIZED / **FND** FOUNDATION / **EL** ELEVATION / **RND.** ROUND / **GA** GAUGE / **DIA** DIAMETER / **TYP.** TYPICAL

SITE ADAPTATION/ENGINEERING VERIFICATION:

1. PRIOR TO COMMENCING FABRICATION FOR A SPECIFIC SITE, VERIFY IF ANY MODIFICATIONS TO THE STRUCTURE AND/OR FOUNDATION CONNECTIONS ARE REQUIRED BY THE SITE ADAPTATION ENGINEER.

2. THIS IS A PROTOTYPICAL DESIGN AND DOCUMENT SET. THE DESIGN AND DEPICTED FABRICATION, ERECTION, AND FOUNDATION DRAWINGS ARE ONLY VALID FOR THE EXACT DESIGN PARAMETERS AND COMBINATIONS OF PARAMETERS DOCUMENTED.THE DESIGN MUST BE SITE ADAPTED TO SPECIFIC SITES. ANY USE OF THIS DESIGN AND DOCUMENT FOR A SPECIFIC SITE REQUIRES:

   A. DESIGN PARAMETER VERIFICATION BY A REGISTERED PROFESSIONAL ENGINEER, EXPERIENCED IN STRUCTURAL ENGINEERING, VERIFY THAT LOADING CONDITIONS AND THE REQUIREMENTS OF THE SITE ARE EQUAL TO OR LESS THAN THE DOCUMENTED DESIGN PARAMETERS AND/OR COMBINATION OF THE DOCUMENTED DESIGN PARAMETERS

   B. VERIFICATION OF SPECIFIC SITE SOIL CONDITIONS. FIELD VERIFY THAT THE EXISTING SITE SOIL CONDITIONS ARE EQUAL TO OR GREATER THAN THE DOCUMENTED DESIGN PARAMETERS AND/OR COMBINATIONS OF DOCUMENTED DESIGN PARAMETERS.

   C. ANY SITE SPECIFIC CONDITIONS FAILING A OR B WILL REQUIRE RE-ANALYSIS OF THE STRUCTURE AND/OR FOUNDATION BY A CERTIFIED DESIGN PROFESSIONAL. FAILURE TO VERIFY THE VALIDITY OF THIS DESIGN FOR A SPECIFIC SITE, FOLLOWED BY ANY NECESSARY SITE ADAPTATION MODIFICATION CAN RESULT IN A DANGEROUS SITUATION.

STEEL:

1. ALL STRUCTURAL STEEL TUBING SHALL BE GALVANIZED, MIN. YIELD STRENGTH 50 KSI. SECTION PROPERTIES, DESIGN VALUES, AND GALVANIZING PROTECTION SHALL MEET OR EXCEED STANDARDS BY ALLIED TUBE AND CONDUIT - HARVEY, ILLINOIS.

2. STEEL PLATES SHALL COMPLY WITH ASTM A572 GRADE 50 OR EQUAL. STRUCTURAL STEEL IS TO BE SHOP PRIME- COATED WITH COLD GALVANIZING COMPOUND. APPLY SHOP PRIME COAT TO OBTAIN A UNIFORM DRY FILM THICKNESS OF NOT LESS THAN 2-MILS.

3. ALL BOLTED CONNECTIONS SHALL USE A325 BOLTS WITH COMPATIBLE WASHERS AND NUTS OF DIAMETERS INDICATED ON PLANS. BOLTS NEED ONLY BE TIGHTENED TO THE SNUG-TIGHT CONDITION. THE SNUG-TIGHT CONDITION IS DEFINED AS THE TIGHTNESS ATTAINED BY A FEW IMPACTS OF AN IMPACT WRENCH, OR THE FULL EFFORT OF A MAN USING AN ORDINARY SPUD WRENCH

4. ALL STRUCTURAL STEEL IS TO BE FABRICATED IN ACCORDANCE WITH THE LATEST EDITION OF AISC "SPECIFICATION FOR THE DESIGN, FABRICATION AND ERECTION OF STRUCTURAL STEEL FOR BUILDINGS."

CABLES AND HARDWARE:

1. ALL CABLE SHALL BE GALVANIZED STEEL, MULTIPURPOSE, 7 X 7 (≤ 1/4" DIA.) OR 7 X 19 (5/16" & 3/8" DIA.) OR 6 X 26 (1/2" DIA.) CLASS STRAND CORE COMMERCIAL GRADE, OF DIAMETER INDICATED, UNLESS OTHERWISE NOTED.

2. CABLE SLEEVES SHALL BE INSTALLED PER MANUFACTURER'S RECOMMENDATIONS.

4/9/10

CABLES AND HARDWARE (CONT.):

3. USE THIMBLES WITH CABLE SLEEVES IN ALL LOOP-END APPLICATIONS.

4. TENSION CABLES AT TURNBUCKLE TO TAUT CONDITION (STRAIGHT AND NOT SLACK OR LOOSE).

5. TIGHTEN CABLES SEQUENTIALLY TO AVOID TWISTING OR DEFORMING STRUCTURAL ELEMENTS DURING ERECTION. RECHECK PREVIOUSLY TIGHTENED CABLES UNTIL ALL CABLES ACHIEVE TAUT CONDITION.

WELDING:

1. REFER TO "WELDING GUIDELINES" PUBLISHED BY ALLIED TUBE AND CONDUIT; HARVEY, ILLINOIS, FOR RECOMMENDED PROCESSES AND PRACTICES FOR WELDING GALVANIZED STEEL TUBING.

   A. TO DEVELOP THE FULL STRENGTH AT PIPE JOINT, THE ALL AROUND FILLET WELDS SHALL BE SIZED AS FOLLOWS:

THICKNESS OF THE TUBE	MINIMUM FILLET WELD SIZE
Gage 14	1/8"
Gage 13 & 12	5/32"
Gage 11 & 10	3/16"
Gage 9 & 8	7/32"
Gage 7	1/4"

   (PLEASE NOTE; WHEN TUBES OF TWO DIFFERENT WALL THICKNESSES ARE JOINED, THE MINIMUM FILLET WELD SIZE SHALL BE BASED ON THE THINNER OF THE TWO MEMBERS).

2. WELDS SHALL SHOW UNIFORM SECTION, SMOOTHNESS OF WELD METAL, FREEDOM FROM POROSITY AND CLINKERS, AND ADEQUATE STRENGTH AND DURABILITY.

3. ALL WELDS NOT OTHERWISE IDENTIFIED SHALL BE CONTINUOUS.

4. ALL SHOP WELDING IS TO BE DONE BY CERTIFIED OPERATORS (TEST POSITION 4F AND 5F WITH PIPE IS MINIMUM REQUIRED CERTIFICATION).

5. ALL WELDING SHALL BE IN ACCORDANCE WITH THE LATEST EDITION OF AWS D1.1 AND D1.3

PAINTING AND TOUCH UP:

1. AFTER SHOP FABRICATION, TOUCH-UP ALL WELDS, ABRADED AREAS AND SCRATCHES WITH COLD GALVANIZING COMPOUND CONSISTENT WITH GALVANIZED TUBE MANUFACTURER'S RECOMMENDATIONS FOR COLOR AND COMPOSITION. PRIOR TO TOUCH-UP, CLEAN WELDED AND ABRADED AREAS WITH A WIRE BRUSH TO REMOVE SLAG AND LOOSE PARTICLES. SURFACES MUST BE CLEAN AND OIL FREE.

2. AFTER FIELD INSTALLATION, TOUCH-UP ALL ABRADED AREAS, SCRATCHES, FIELD WELDS, BOLTED CONNECTIONS AND ATTACHMENTS WITH COLD GALVANIZING COMPOUND OF THE SAME COMPOSITION AND COLOR USED FOR SHOP COATING.

ERECTION AND FIELD QUALITY CONTROL:

1. THE ERECTOR IS RESPONSIBLE FOR DESIGNING AND FURNISHING ALL TEMPORARY BRACING, SHORING, AND/OR SUPPORT THAT MAY BE REQUIRED AS THE RESULT OF ERECTOR'S CONSTRUCTION METHODS AND/OR SEQUENCES. THE STRUCTURE IS DESIGNED TO FUNCTION AS A UNIT UPON COMPLETION. THE STRUCTURAL ENGINEER ASSUMES NO LIABILITY FOR THE STRUCTURE DURING ERECTION.

2. NO OPENING (OTHER THAN THOSE SHOWN ON THE DRAWINGS) SHALL BE MADE IN ANY STRUCTURAL MEMBER, AND NO MODIFICATION OR ALTERATION SHALL BE MADE TO ANY STRUCTURAL MEMBER OR CONNECTION WITHOUT THE WRITTEN APPROVAL OF THE DESIGN ENGINEER.

Developed By
A Division of Engineering Services & Products Co.
1440 18th Ave. SW
Cyrsville, IA 52040
P: 563 875 6113
F: 563 875 2317
www.esapco.com/

Order Number: 4323239
Customer Number: 5970824

Naeem Akhter, PE, SE
Consulting Structural Engineer
7834 W 156th Street
Overland Park, KS 66223
(913) 685-2015 Off
(913) 685-2019 Fax

Structure SKU #: T083HKS014080WF
Structure Size: 83' W x 80' L x 37'- 8 3/16" H
Structure Description: HERCULES TRUSS ARCH
Customer Information: ENVIR HEALTH & SAFETY, P.O. BOX 129, SUFFIELD, CT 06078
Customer Contact: ART BOEHM
Customer Contact Phone: 860-668-0736
Page Title: GENERAL NOTES

PDMWorks Project:

Drawings	
Drawn By:	Creation Date:
WJM	3/16/2010

Revisions:

No.	By:	Revision Date:
1	---	---
2	---	---
3	---	---

Sheet: **B1-1.0**

NEW SHEET ADDED BY ADDENDUM NO. 2
FOR INFORMATION ONLY

REV.	DATE	REVISION DESCRIPTION
-	-	-
-	-	-
-	-	-
-	-	-
-	-	-
-	-	-
-	-	-

THE INFORMATION, INCLUDING ESTIMATED QUANTITIES OF WORK, SHOWN ON THESE SHEETS IS BASED ON LIMITED INVESTIGATIONS BY THE STATE AND IS IN NO WAY WARRANTED TO INDICATE THE CONDITIONS OF ACTUAL QUANTITIES OF WORK WHICH WILL BE REQUIRED.

NOT TO SCALE

STATE OF CONNECTICUT
DEPARTMENT OF TRANSPORTATION

SIGNATURE/ BLOCK:

PROJECT TITLE: **NEW HAVEN RAIL YARD FACILITIES IMPROVEMENTS WEST END YARD**

TOWN: **NEW HAVEN**

DRAWING TITLE: **FOR INFORMATION ONLY**

PROJECT NO. 0300-0138
DRAWING NO. FIO-03
SHEET NO. 20.03.A2

MATERIAL SPECIFICATIONS

ITEM	DESCRIPTION	MATERIAL
A	SUPPORT BASE	
	OUTER CHORD	GALV RND STEEL TUBE - 4.00" Ø - 10 GA
	INNER CHORD	GALV RND STEEL TUBE - 4.00" Ø - 8 GA
	WEB (STRAIGHT)	GALV RND STEEL TUBE - 1.90" Ø - 10 GA
	WEB (ANGLED)	GALV RND STEEL TUBE - 1.90" Ø - 10 GA
	CONNECTION PLATES	STEEL PLATE 5/8" THICK
	GUSSETS	STEEL PLATE 1/2" THICK
	PIVOT PLATE (CHORD)	STEEL PLATE 1/2" THICK
	PIVOT PLATE (ROUND)	STEEL PLATE 3/4" THICK
B & C	ROOF SEGMENT	
	OUTER CHORD	GALV RND STEEL TUBE - 4.00" Ø - 10 GA
	INNER CHORD	GALV RND STEEL TUBE - 4.00" Ø - 10 GA
	WEB (STRAIGHT)	GALV RND STEEL TUBE - 1.90" Ø - 10 GA
	WEB (ANGLED)	GALV RND STEEL TUBE - 1.90" Ø - 10 GA
	CONNECTION PLATES	STEEL PLATE 5/8" THICK
	GUSSETS	STEEL PLATE 1/2" THICK
E	TOP CURVED SEGMENT	
	OUTER CHORD	GALV RND STEEL TUBE - 4.00" Ø - 10 GA
	INNER CHORD	GALV RND STEEL TUBE - 4.00" Ø - 10 GA
	WEB (STRAIGHT)	GALV RND STEEL TUBE - 1.90" Ø - 10 GA
	WEB (ANGLED)	GALV RND STEEL TUBE - 1.90" Ø - 10 GA
	CONNECTION PLATES	STEEL PLATE 5/8" THICK
	GUSSETS	STEEL PLATE 1/2" THICK
F	BASES	
	HORIZONTAL	STEEL PLATE 3/4" THICK
	VERTICAL (ROUNDED)	STEEL PLATE 1/2" THICK
	GUSSETS	STEEL PLATE 1/2" THICK
	THREADED STUDS	1/2" Ø x 1"
	CABLE LINK	BI-SECTED CHAIN LINK - 3/4" CHAIN
G	BOLTS	
	BASE HINGE	1-1/4"Φ x 4" A325 HEX BOLT
	CONNECTION PLATES	3/4"Φ x 3.0" A325 HEX BOLT
	END SEGMENT CONNECTION PLATES	#14 x 1.00" TEK SCREWS
	U-BOLTS	1/2"Φ U-BOLTS - GALV STEEL
	BOX (EXPANSION) BOLTS	3/4"Φ BOX BOLT ASY - STEEL ZINC PLATE
H	BRACING	
	ANGLED BRACING	GALV STEEL TUBE 3.5"Φ 14 GAUGE
	LATERAL BRACING (OUTER BAYS)	GALV STEEL TUBE 3.5"Φ 14 GAUGE
	LATERAL BRACING (INNER BAYS)	GALV STEEL TUBE 2.875"Φ 14 GAUGE
	U-BOLT PLATE	STEEL PLATE - 5/16 THICK
	BOX (EXPANSION) BOLT PLATE	STEEL PLATE - 5/16 THICK
J	CABLES	
	STRUCTURAL CABLES	1/2"Φ WIRE ROPE - 7 x 19 - GALV STEEL
	TURNBUCKLE	3/4" x 9" GALV STEEL - EYE / EYE
	THIMBLE	1/2"Φ CABLE THIMBLE - GALV STEEL
	SLEEVE	1/2"Φ CABLE SLEEVE - ALUMINUM
	SHACKLE	1/2" BOW GALV STEEL ANCHOR SHACKLE
	SWAY CABLES	3/16"Φ WIRE ROPE - 7 x 19 - GALV STEEL
	TURNBUCKLE	1/2" x 6" GALV STEEL - JAW / JAW
	THIMBLE	3/16"Φ CABLE THIMBLE - GALV STEEL
	SLEEVE	3/16"Φ CABLE SLEEVE - ALUMINUM
	SHACKLE	1/4" BOW GALV STEEL ANCHOR SHACKLE
K	END SEGMENT CONNECTION PLATES	STEEL SHEET - 3/16" THICK
L	WINCH	RATCHETING WINCH 2" STRAP STEEL ZINC

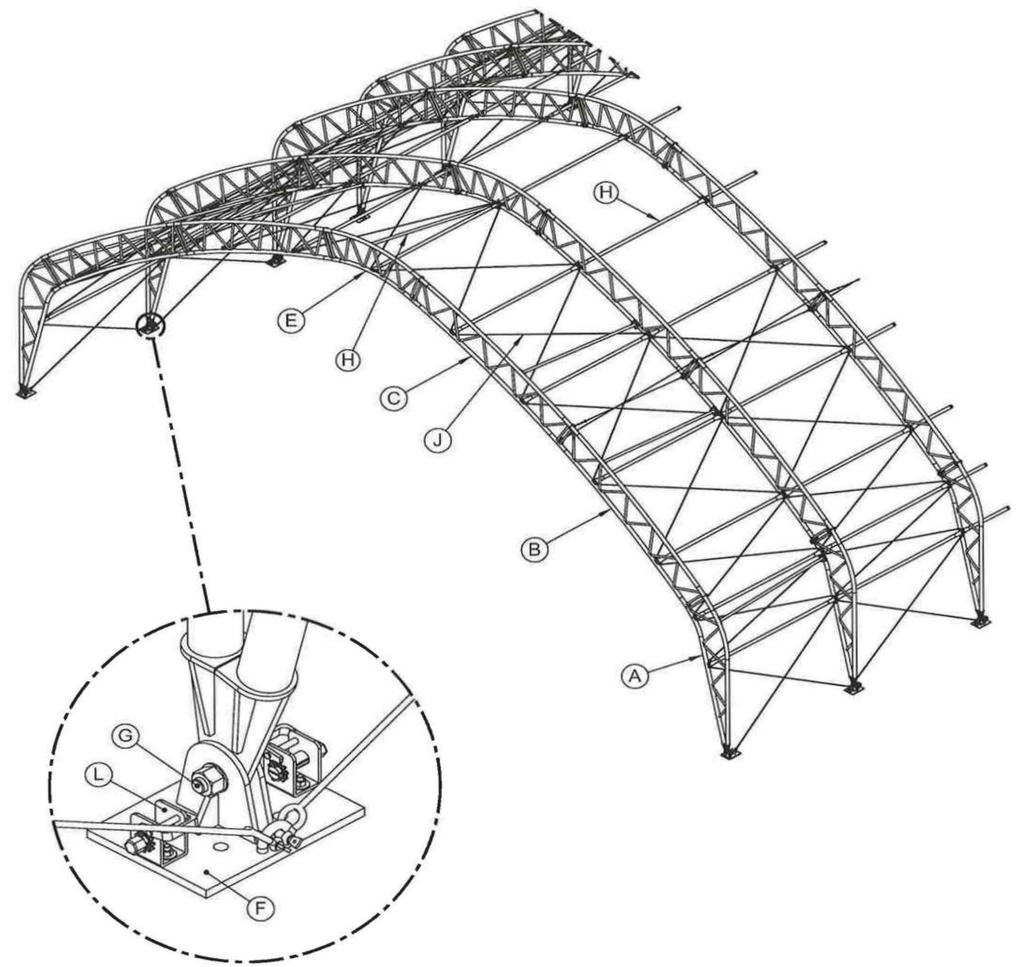

4/9/10

Developed By
A Division of Engineering Services & Products Co.
1440 18th Ave SW
Dyersville IA 52040
P: 563 875 6113
F: 563 875 2317
www.espco.com/

Order Number: 4323239
Customer Number: 5970824

Naeem Akhter, PE, SE
Consulting Structural Engineer
7834 W 156th Street
Overland Park, KS 66223
(913) 685-2015 Off
(913) 685-2019 Fax

Customer Information: ENVIR HEALTH & SAFETY, P.O. BOX 129, SUFFIELD, CT 06078
Customer Contact: ART BOEHM
Customer Contact Phone: 860-668-0736
Structure SKU #: T083HKS014080WF
Structure Size: 83' W x 80' L x 37'- 8 3/16" H
Structure Description: HERCULES TRUSS ARCH
Page Title: MATERIAL SPECIFICAITONS

PDMWorks Project: 4323239 ENVIR HEALTH & SAFETY
Drawings
Drawn By: WJM
Creation Date: 3/16/2010
Revisions:

No	By:	Revision Date:
1	---	---
2	---	---
3	---	---

Sheet: C1-1.0

NEW SHEET ADDED BY ADDENDUM NO. 2
FOR INFORMATION ONLY

REV.	DATE	REVISION DESCRIPTION
-	-	-
-	-	-
-	-	-
-	-	-
-	-	-
-	-	-
-	-	-

THE INFORMATION, INCLUDING ESTIMATED QUANTITIES OF WORK, SHOWN ON THESE SHEETS IS BASED ON LIMITED INVESTIGATIONS BY THE STATE AND IS IN NO WAY WARRANTED TO INDICATE THE CONDITIONS OF ACTUAL QUANTITIES OF WORK WHICH WILL BE REQUIRED.

NOT TO SCALE

STATE OF CONNECTICUT
DEPARTMENT OF TRANSPORTATION

SIGNATURE/ BLOCK:

PROJECT TITLE: **NEW HAVEN RAIL YARD FACILITIES IMPROVEMENTS WEST END YARD**

TOWN: **NEW HAVEN**

DRAWING TITLE: **FOR INFORMATION ONLY**

PROJECT NO. 0300-0138
DRAWING NO. FIO-04
SHEET NO. 20.04.A2

FRONT PROFILE (GRID)
- GRID REPRESENTS 24" SQUARES

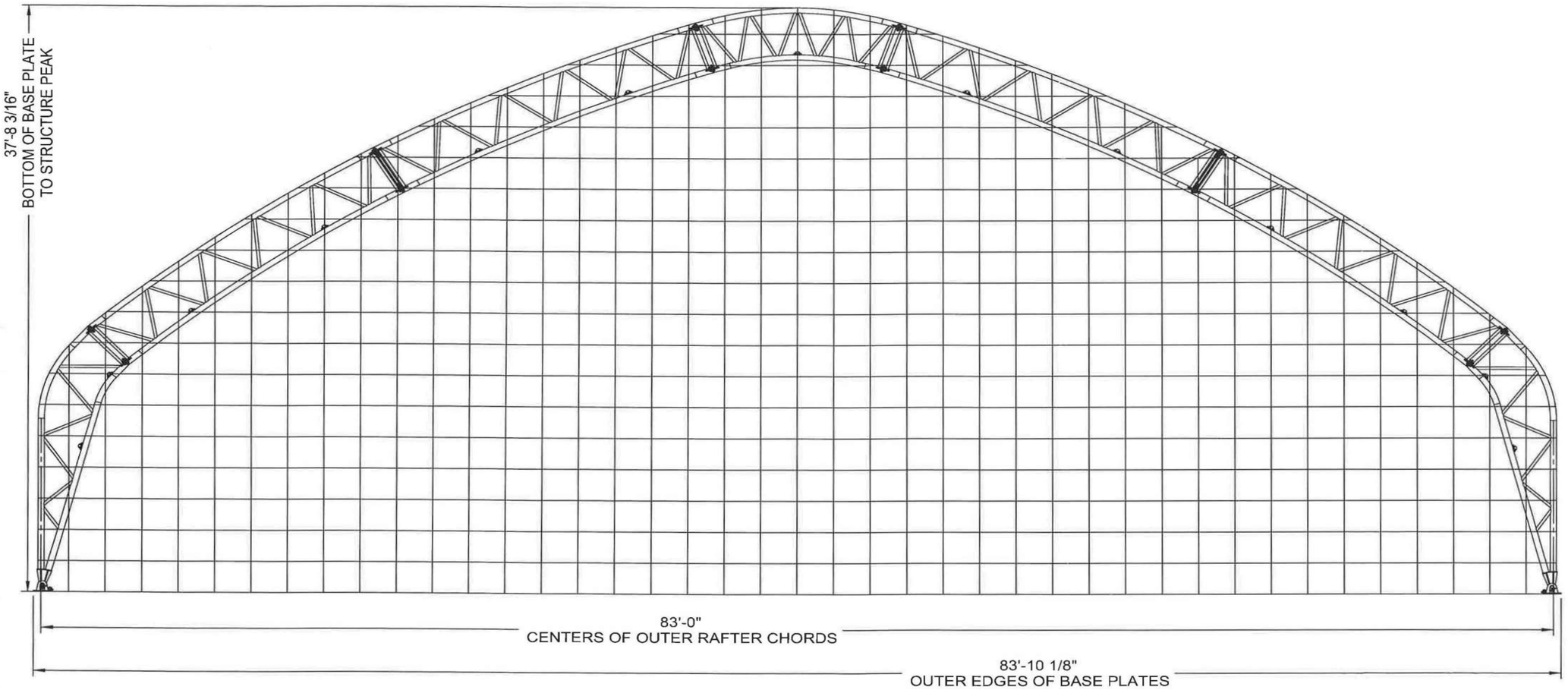

4/9/10

Developed By
A Division of Engineering Services & Products Co.
1440 18th Ave. SW
Dyersville, IA 52040
P 563 875 8113
F 563 875 2317
www.eladpro.com/

Order Number: 4323239
Customer Number: 5970824

Naeem Akhter, PE, SE
Consulting Structural Engineer
7834 W 156th Street
Overland Park, KS 66223
(913) 685-2015 Off
(913) 685-2019 Fax

Structure SKU #: T083HKS014080WF
Structure Size: 83' W x 80' L x 37'- 8 3/16" H
Structure Description: HERCULES TRUSS ARCH
Customer Contact: ART BOEHM
Customer Contact Phone: 860-668-0736
Customer Information: ENVIR HEALTH & SAFETY, P.O. BOX 129, SUFFIELD, CT 06078
Page Title: FRONT PROFILE (GRID)

PDMWorks Project: 0122 ENVIR HEALTH & SAFETY

Drawings

Drawn By:	Creation Date:
WJM	3/16/2010

Revisions:

No.	By:	Revision Date:
1		
2		
3		

Sheet: D1-1.0

NEW SHEET ADDED BY ADDENDUM NO. 2

FOR INFORMATION ONLY

REV.	DATE	REVISION DESCRIPTION
-	-	-
-	-	-
-	-	-
-	-	-
-	-	-
-	-	-
-	-	-

THE INFORMATION, INCLUDING ESTIMATED QUANTITIES OF WORK, SHOWN ON THESE SHEETS IS BASED ON LIMITED INVESTIGATIONS BY THE STATE AND IS IN NO WAY WARRANTED TO INDICATE THE CONDITIONS OF ACTUAL QUANTITIES OF WORK WHICH WILL BE REQUIRED.

NOT TO SCALE

STATE OF CONNECTICUT
DEPARTMENT OF TRANSPORTATION

SIGNATURE/ BLOCK:

PROJECT TITLE: **NEW HAVEN RAIL YARD FACILITIES IMPROVEMENTS WEST END YARD**

TOWN: **NEW HAVEN**

DRAWING TITLE: **FOR INFORMATION ONLY**

PROJECT NO. 0300-0138
DRAWING NO. FIO-05
SHEET NO. 20.05.A2

FRONT PROFILE RAFTERS (END RAFTERS)
• PART LOCATIONS

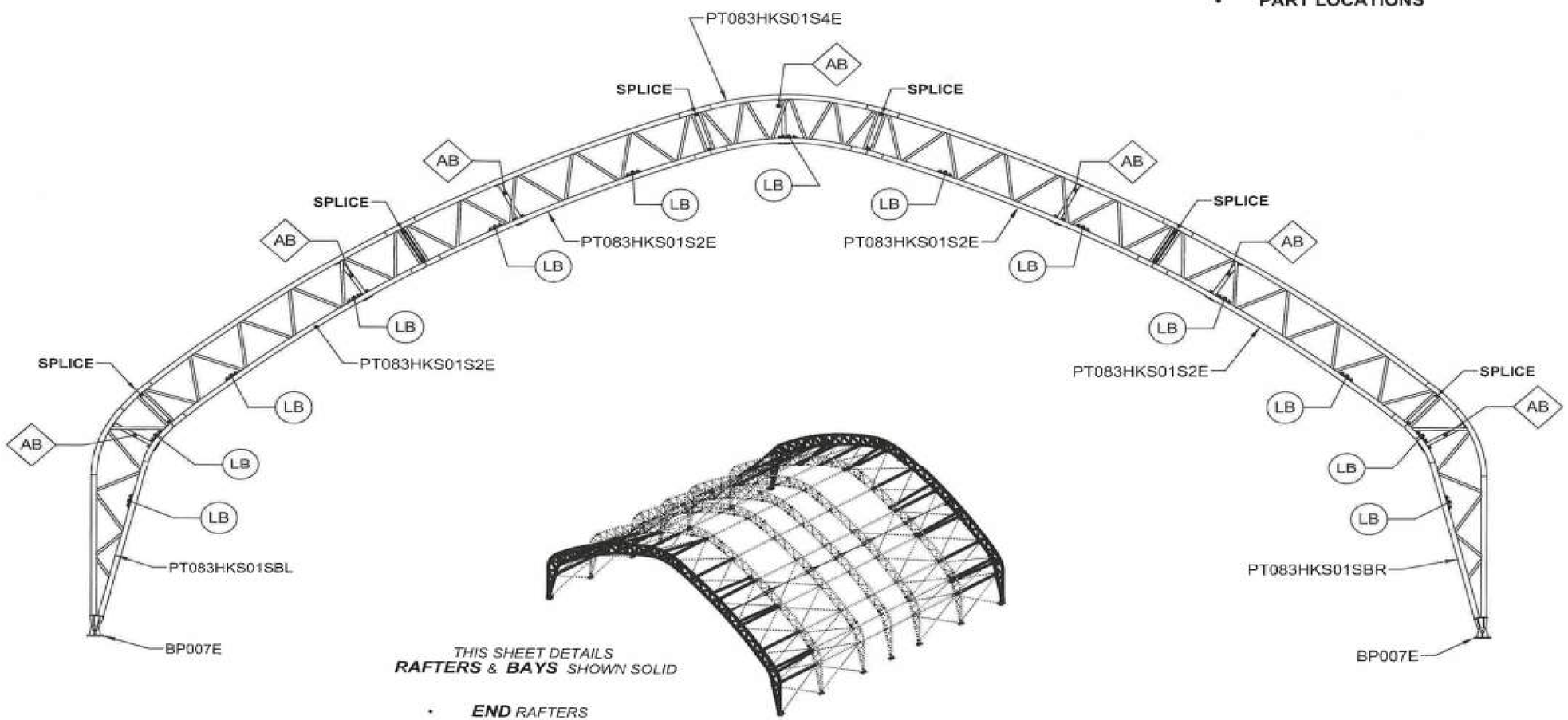

(LB) • **LB =** LATERAL BRACE (SKU: **LB35G14SL180**)

(AB) • **AB =** ANGLED BRACE (SKU: **AB35G14SL180C4**)

• **SPLICE:** SEE DETAIL PAGE **[G2-1.0]**

4/9/10

Order Number: 4323239
Customer Number: 5970824

Naeem Akhter, PE, SE
Consulting Structural Engineer
7834 W 156th Street
Overland Park, KS 66223
(913) 685-2015 Off
(913) 685-2019 Fax

Customer Information: ENVIR HEALTH & SAFETY, P.O. BOX 129, SUFFIELD, CT 06078
Customer Contact: ART BOEHM
Customer Contact Phone: 860-668-0736
Structure SKU #: T083HKS014080WF
Structure Size: 83' W x 80' L x 37'- 8 3/16" H
Structure Description: HERCULES TRUSS ARCH
Page Title: FRONT PROFILE (END RAFTERS)

PDMWorks Project:
Drawings
Drawn By: WJM
Creation Date: 3/16/2010
Revisions:

No	By	Revision Date
1		
2		
3		

Sheet: D2-1.0

NEW SHEET ADDED BY ADDENDUM NO. 2
FOR INFORMATION ONLY

REV.	DATE	REVISION DESCRIPTION
-	-	-
-	-	-
-	-	-
-	-	-
-	-	-
-	-	-
-	-	-

THE INFORMATION, INCLUDING ESTIMATED QUANTITIES OF WORK, SHOWN ON THESE SHEETS IS BASED ON LIMITED INVESTIGATIONS BY THE STATE AND IS IN NO WAY WARRANTED TO INDICATE THE CONDITIONS OF ACTUAL QUANTITIES OF WORK WHICH WILL BE REQUIRED.

NOT TO SCALE

STATE OF CONNECTICUT
DEPARTMENT OF TRANSPORTATION

SIGNATURE/ BLOCK:

PROJECT TITLE: **NEW HAVEN RAIL YARD FACILITIES IMPROVEMENTS WEST END YARD**

TOWN: **NEW HAVEN**

DRAWING TITLE: **FOR INFORMATION ONLY**

PROJECT NO. **0300-0138**
DRAWING NO. **FIO-06**
SHEET NO. **20.06.A2**

FRONT PROFILE (MID RAFTERS - 15' BAYS)
- PART LOCATIONS

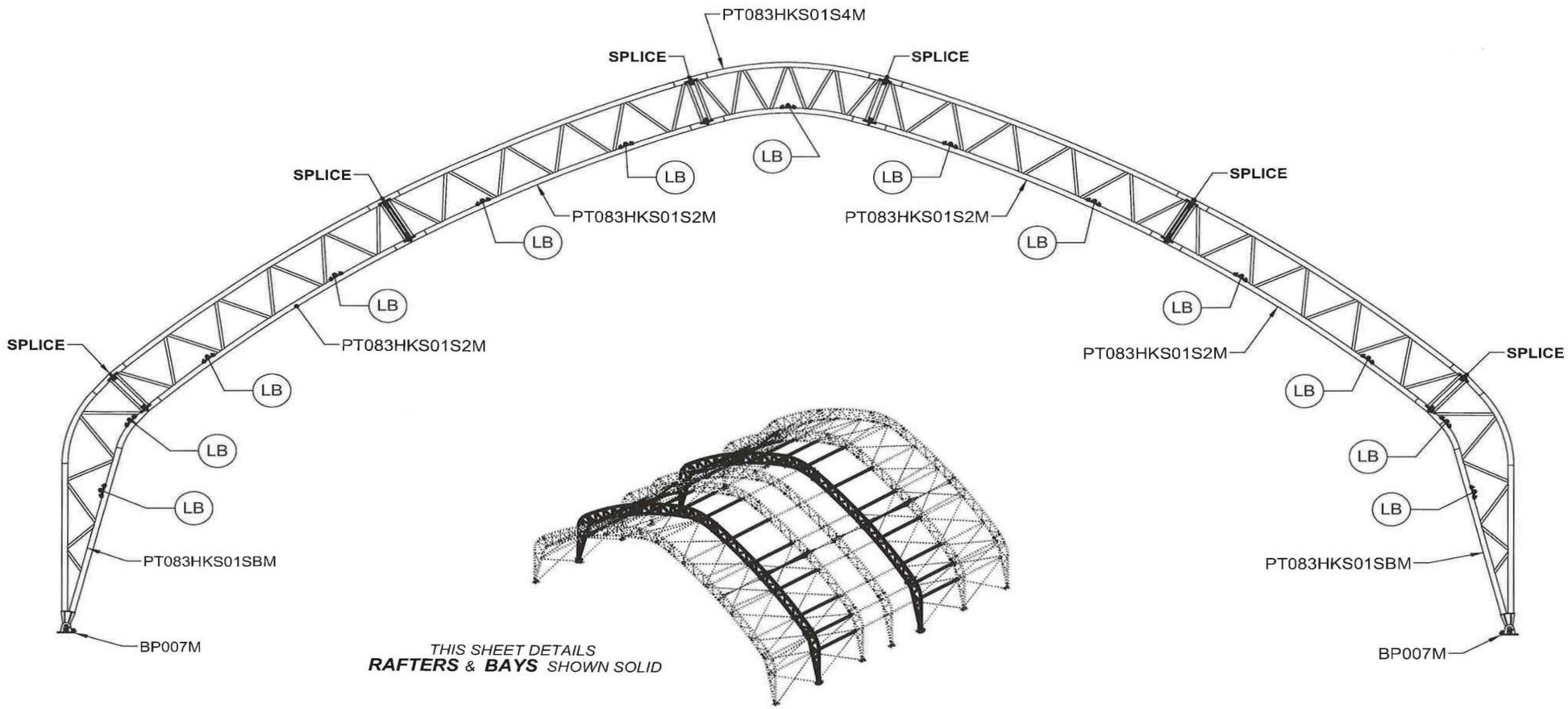

4/9/10

(LB) • **LB =** LATERAL BRACE (SKU: **LB35G14SL180**)

• **SPLICE:** SEE DETAIL PAGE **[G2-1.0]**

Developed By
A Division of Engineering Services & Products Co.
1440 18th Ave. SW
Decorah, IA 52040
P: 563.875.8113
F: 563.875.2317
www.esapco.com/

Order Number: 4323239

Customer Number: 5970824

Naeem Akhter, PE, SE
Consulting Structural Engineer
7834 W 156th Street
Overland Park, KS 66223
(913) 685-2015 Off
(913) 685-2019 Fax

Structure SKU #: T083HKS014080WF

Structure Size: 83' W x 80' L x 37'- 8 3/16" H

Structure Description: HERCULES TRUSS ARCH

Customer Information: ENVIR HEALTH & SAFETY, P.O. BOX 29, SUFFIELD, CT 06078

Customer Contact Phone: 860-668-0736

Customer Contact: ART BOEHM

Page Title: FRONT PROFILE (MID RAFTERS - 15' BAYS)

PDMWorks Project: 02-0223 ENVIR HEALTH & SAFETY

Drawings

Drawn By:	Creation Date:
WJM	3/16/2010

Revisions:

No	By:	Revision Date:
1	---	---
2	---	---
3	---	---

Sheet: **D3-1.0**

NEW SHEET ADDED BY ADDENDUM NO. 2
FOR INFORMATION ONLY

REV.	DATE	REVISION DESCRIPTION
-	-	-
-	-	-
-	-	-
-	-	-
-	-	-
-	-	-
-	-	-

THE INFORMATION, INCLUDING ESTIMATED QUANTITIES OF WORK, SHOWN ON THESE SHEETS IS BASED ON LIMITED INVESTIGATIONS BY THE STATE AND IS IN NO WAY WARRANTED TO INDICATE THE CONDITIONS OF ACTUAL QUANTITIES OF WORK WHICH WILL BE REQUIRED.

NOT TO SCALE

STATE OF CONNECTICUT
DEPARTMENT OF TRANSPORTATION

SIGNATURE/ BLOCK:

PROJECT TITLE: **NEW HAVEN RAIL YARD FACILITIES IMPROVEMENTS WEST END YARD**

TOWN: **NEW HAVEN**

DRAWING TITLE: **FOR INFORMATION ONLY**

PROJECT NO. **0300-0138**

DRAWING NO. **FIO-07**

SHEET NO. **20.07.A2**

FRONT PROFILE (MID RAFTERS - 10' BAYS)
• PART LOCATIONS

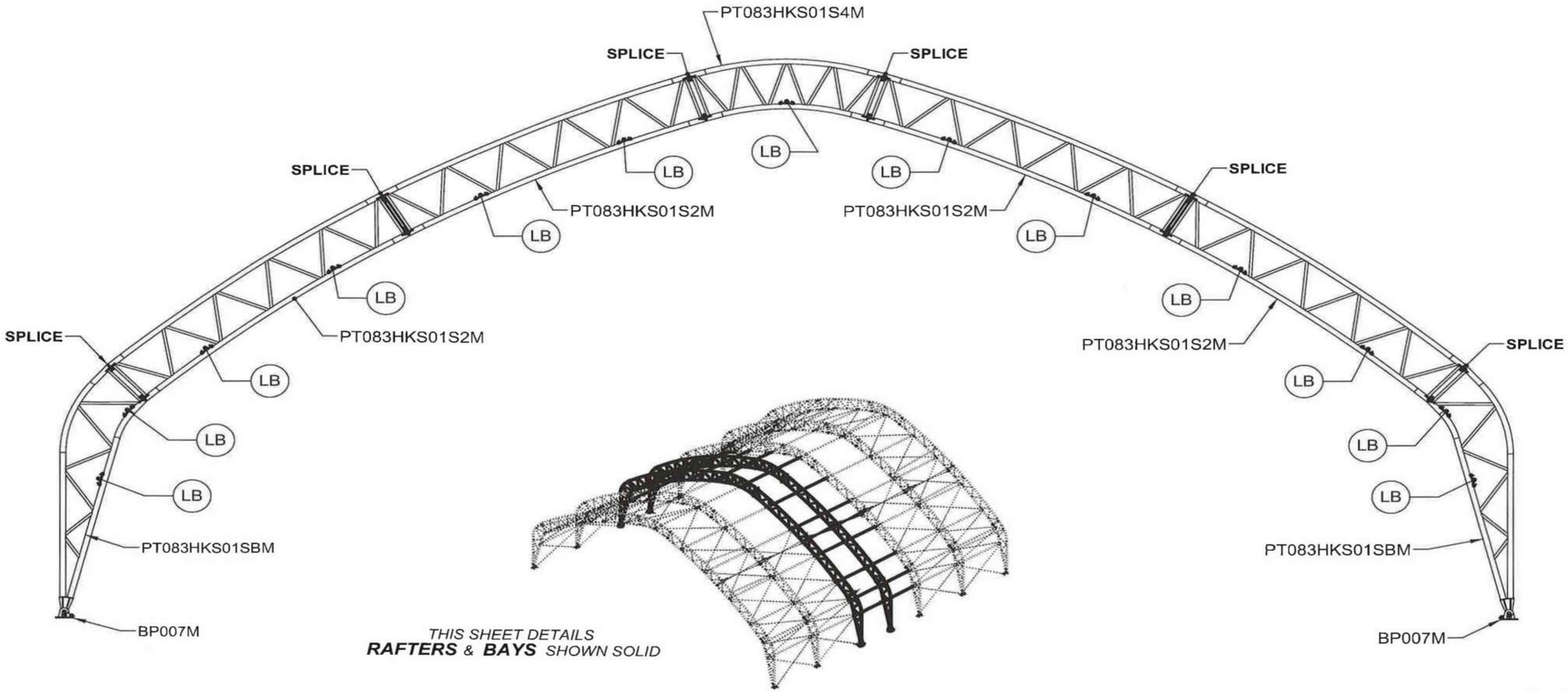

4/9/10

LB • **LB =** LATERAL BRACE (SKU: **LB28G14SL120**)

• **SPLICE:** SEE DETAIL PAGE **[G2-1.0]**

Developed By
A Division of Engineering Services & Products Co.
1440 18th Ave. SW
Owatonna, IA 52040
P: 563.875.6113
F: 563.875.2317
www.esapco.com/

Order Number: 4323239

Customer Number: 5970824

Naeem Akhter, PE, SE
Consulting Structural Engineer
7834 W 156th Street
Overland Park, KS 66223
(913) 685-2015 Off
(913) 685-2019 Fax

Structure SKU #: T083HKS014080WF

Structure Size: 83' W x 80' L x 37'- 8 3/16" H

Structure Description: HERCULES TRUSS ARCH

Customer Information: ENVIR HEALTH & SAFETY, P.O. BOX 129, SUFFIELD, CT 06078

Customer Contact: ART BOEHM

Customer Contact Phone: 860-668-0736

Page Title: FRONT PROFILE (MID RAFTERS - 10' BAYS)

PDMWorks Project: 4323239 ENVIR HEALTH & SAFETY

Drawings

Drawn By:	Creation Date:
WJM	3/16/2010

Revisions:

No	By:	Revision Date:
1	-	-
2	-	-
3	-	-

Sheet: **D4-1.0**

NEW SHEET ADDED BY ADDENDUM NO. 2

FOR INFORMATION ONLY

REV.	DATE	REVISION DESCRIPTION
-	-	-
-	-	-
-	-	-
-	-	-
-	-	-
-	-	-
-	-	-

THE INFORMATION, INCLUDING ESTIMATED QUANTITIES OF WORK, SHOWN ON THESE SHEETS IS BASED ON LIMITED INVESTIGATIONS BY THE STATE AND IS IN NO WAY WARRANTED TO INDICATE THE CONDITIONS OF ACTUAL QUANTITIES OF WORK WHICH WILL BE REQUIRED.

NOT TO SCALE

STATE OF CONNECTICUT
DEPARTMENT OF TRANSPORTATION

SIGNATURE/ BLOCK:

PROJECT TITLE: **NEW HAVEN RAIL YARD FACILITIES IMPROVEMENTS WEST END YARD**

TOWN: **NEW HAVEN**

DRAWING TITLE: **FOR INFORMATION ONLY**

PROJECT NO. **0300-0138**

DRAWING NO. **FIO-08**

SHEET NO. **20.08.A2**

FRONT PROFILE (MAIN COVER DETAIL)
- PART LOCATIONS

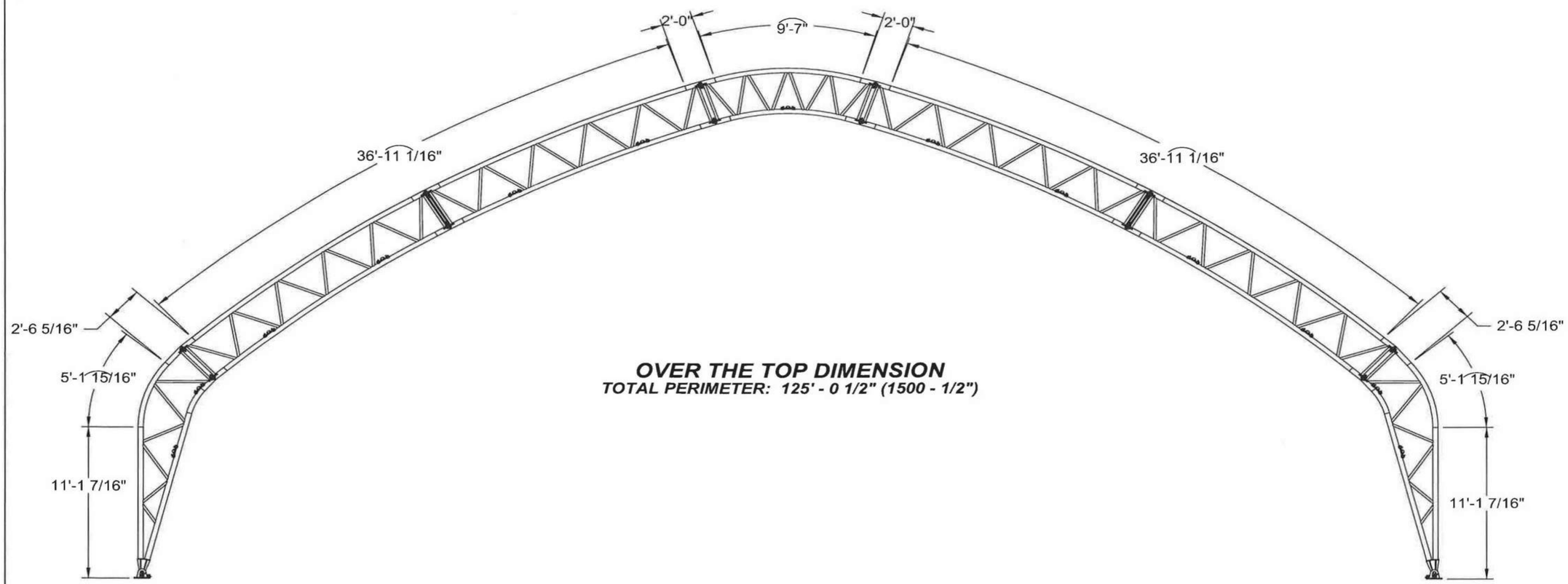

OVER THE TOP DIMENSION
TOTAL PERIMETER: 125' - 0 1/2" (1500 - 1/2")

4/9/10

Developed By
A Division of
Engineering Services & Products Co.
1440 18th Ave. SW
Overpelle, IA 52040
P 563 875 6113
F 563 875 2317
www.enspco.com/

Order Number: 4323239
Customer Number: 5970824

Naeem Akhter, PE,SE
Consulting Structural Engineer
7834 W 156th Street
Overland Park, KS 66223
(913) 685-2015 Office
(913) 685-2019 Fax

Structure SKU #: T083HKS014080WF
Structure Size: 83' W x 80' L x 37'- 8 3/16" H
Structure Description: HERCULES TRUSS ARCH

Customer Information: ENVIR HEALTH & SAFETY, PO BOX 1529, SUFFIELD, CT 06078
Customer Contact Phone: 860-668-0736
Customer Contact: ART BOEHM
Page Title: FRONT PROFILE (MAIN COVER DETAIL)

PDMWorks Project:
Drawings

Drawn By:	Creation Date:
WJM	3/16/2010

Revisions:

No.	By:	Revision Date:
1	---	---
2	---	---
3	---	---

Sheet: D5-1.0

NEW SHEET ADDED BY ADDENDUM NO. 2

FOR INFORMATION ONLY

REV.	DATE	REVISION DESCRIPTION
-	-	-
-	-	-
-	-	-
-	-	-
-	-	-
-	-	-
-	-	-

THE INFORMATION, INCLUDING ESTIMATED QUANTITIES OF WORK, SHOWN ON THESE SHEETS IS BASED ON LIMITED INVESTIGATIONS BY THE STATE AND IS IN NO WAY WARRANTED TO INDICATE THE CONDITIONS OF ACTUAL QUANTITIES OF WORK WHICH WILL BE REQUIRED.

NOT TO SCALE

STATE OF CONNECTICUT
DEPARTMENT OF TRANSPORTATION

SIGNATURE/ BLOCK:

PROJECT TITLE: **NEW HAVEN RAIL YARD FACILITIES IMPROVEMENTS WEST END YARD**

TOWN: **NEW HAVEN**

DRAWING TITLE: **FOR INFORMATION ONLY**

PROJECT NO. **0300-0138**
DRAWING NO. **FIO-09**
SHEET NO. **.20.09.A2**

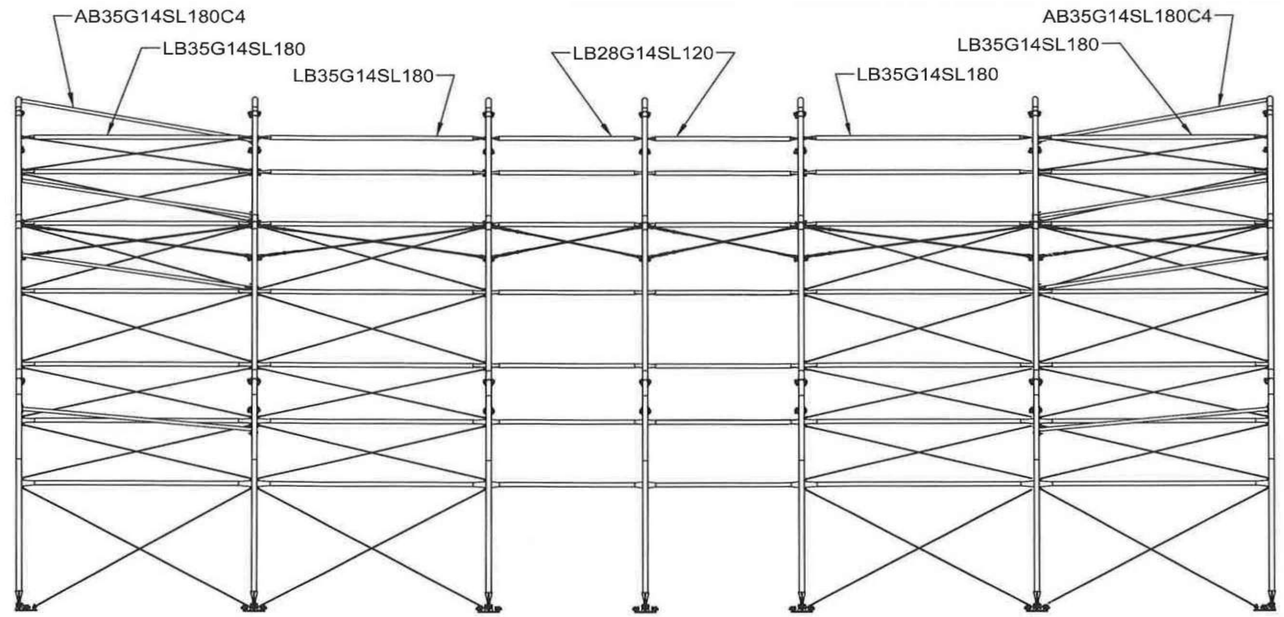

SIDE PROFILE

- **LATERAL BRACING**
- **ANGLE BRACING**
- **CABLE LOCATION**
- **SWAY CABLE LOCATION**

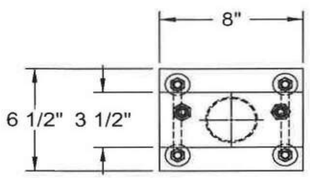

AB35G14SL180C4

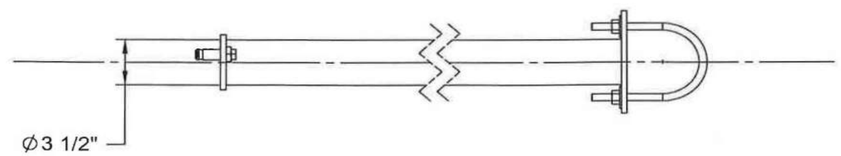

LB35G14SL180

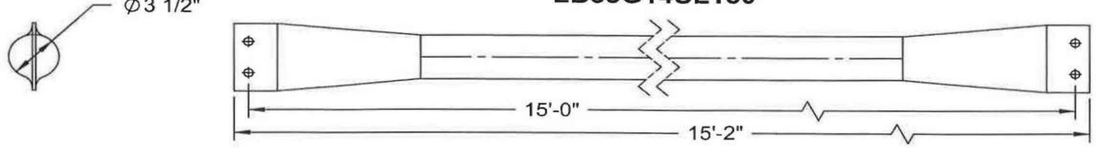

LB28G14SL120

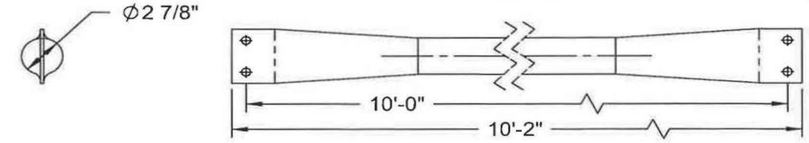

4/9/10

A Division of Engineering Services & Products Co.
1440 16th Ave. SW
Oyersville, IA 52040
P: 563 875 6113
F: 563 875 2317
www.eespco.com/

Order Number: 4323239

Customer Number: 5970824

Naeem Akhter, PE, SE
Consulting Structural Engineer
7834 W 156th Street
Overland Park, KS 66223
(913) 685-2015 Off
(913) 685-2019 Fax

Structure SKU #: T083HKS014080WF

Structure Size: 83' W x 80' L x 37'- 8 3/16" H

Structure Description: HERCULES TRUSS ARCH

Customer Information: ENVIR HEALTH & SAFETY, P.O. BOX 170, SUFFIELD, CT 06078

Customer Contact: ART BOEHM

Customer Contact Phone: 860-668-0736

Page Title: SIDE PROFILE

PDMWorks Project:

Drawings

Drawn By:	Creation Date:
WJM	3/16/2010

Revisions:

No.	By:	Revision Date:
1		
2		
3		

Sheet: **E1-1.0**

NEW SHEET ADDED BY ADDENDUM NO. 2

FOR INFORMATION ONLY

REV.	DATE	REVISION DESCRIPTION
-	-	-
-	-	-
-	-	-
-	-	-
-	-	-
-	-	-
-	-	-

THE INFORMATION, INCLUDING ESTIMATED QUANTITIES OF WORK, SHOWN ON THESE SHEETS IS BASED ON LIMITED INVESTIGATIONS BY THE STATE AND IS IN NO WAY WARRANTED TO INDICATE THE CONDITIONS OF ACTUAL QUANTITIES OF WORK WHICH WILL BE REQUIRED.

NOT TO SCALE

STATE OF CONNECTICUT
DEPARTMENT OF TRANSPORTATION

SIGNATURE/ BLOCK:

PROJECT TITLE: **NEW HAVEN RAIL YARD FACILITIES IMPROVEMENTS WEST END YARD**

TOWN: **NEW HAVEN**

DRAWING TITLE: **FOR INFORMATION ONLY**

PROJECT NO. **0300-0138**

DRAWING NO. **FIO-10**

SHEET NO. **20.10.A2**

TOP PROFILE

- CABLE PATTERN
- STRUCTURE LENGTH
- STRUCTURE WIDTH
- RAFTER SPACING
- SWAY CABLE PATTERN

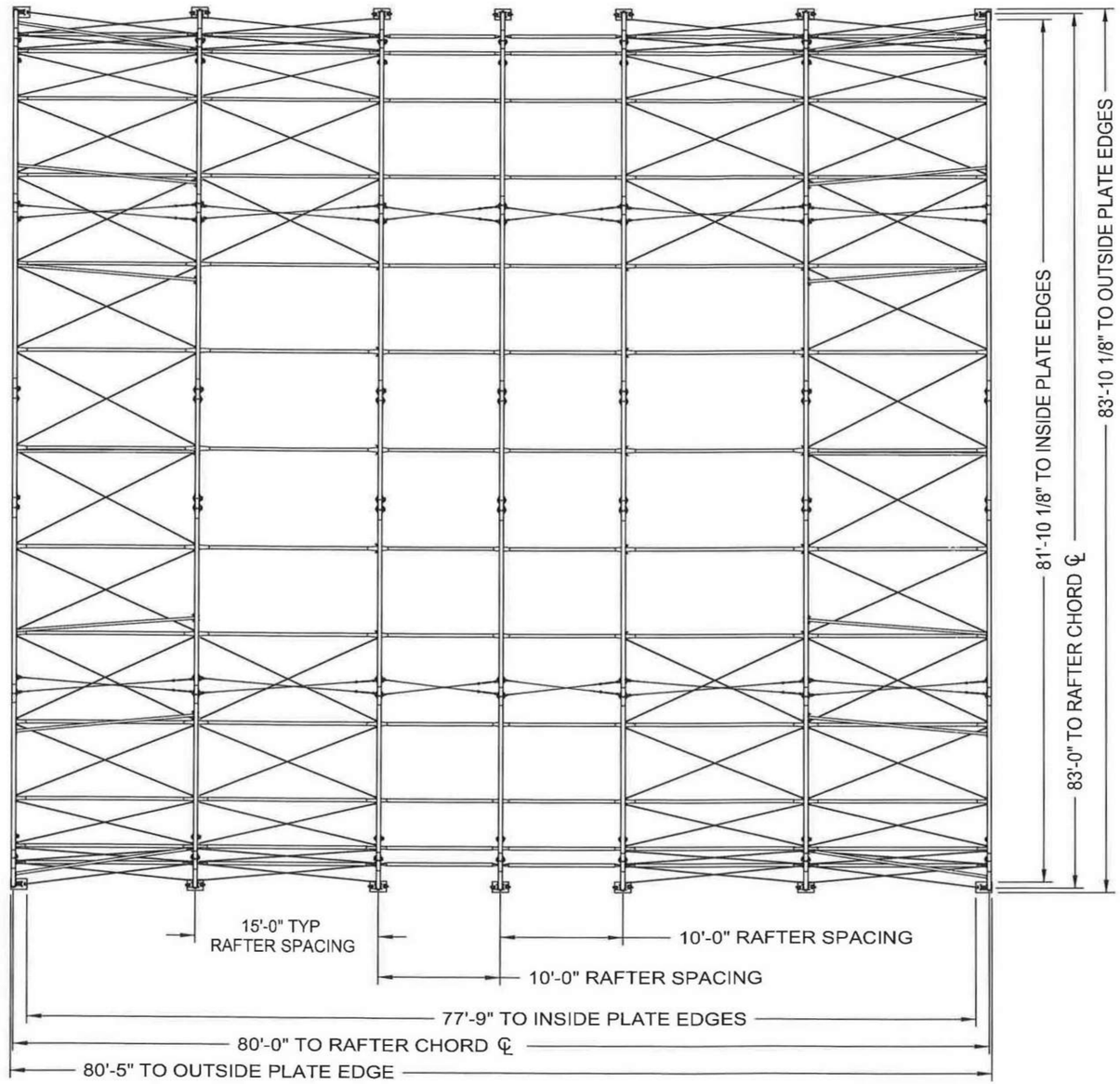

4/9/10

Developed By
A Division of Engineering Services & Products Co.
1440 18th Ave. SW
Owensville, IA 52040
P: 563.875.6113
F: 563.875.2317
www.esspco.com/

Order Number: 4323239
Customer Number: 5970824

Naeem Akhter, PE, SE
Consulting Structural Engineer
7834 W 156th Street
Overland Park, KS 66223
(913) 685-2015 Off
(913) 685-2019 Fax

Customer Information: ENVIR HEALTH & SAFETY, P.O. BOX 129, SUFFIELD, CT 06078	Structure SKU #: T083HKS014080WF
Customer Contact: ART BOEHM	Customer Contact Phone: 860-668-0736
Page Title: TOP PROFILE	Structure Size: 83' W x 80' L x 37'- 8 3/16" H
	Structure Description: HERCULES TRUSS ARCH

PDMWorks Project:
Vault Project Name
Drawings

Drawn By:	Creation Date:
WJM	3/16/2010

Revisions:

No.	By:	Revision Date:
1		
2		
3		

Sheet: F1-1.0

NEW SHEET ADDED BY ADDENDUM NO. 2

FOR INFORMATION ONLY

REV.	DATE	REVISION DESCRIPTION
-	-	-
-	-	-
-	-	-
-	-	-
-	-	-
-	-	-
-	-	-

THE INFORMATION, INCLUDING ESTIMATED QUANTITIES OF WORK, SHOWN ON THESE SHEETS IS BASED ON LIMITED INVESTIGATIONS BY THE STATE AND IS IN NO WAY WARRANTED TO INDICATE THE CONDITIONS OF ACTUAL QUANTITIES OF WORK WHICH WILL BE REQUIRED.

NOT TO SCALE

STATE OF CONNECTICUT
DEPARTMENT OF TRANSPORTATION

SIGNATURE/ BLOCK:

PROJECT TITLE: **NEW HAVEN RAIL YARD FACILITIES IMPROVEMENTS WEST END YARD**

TOWN: **NEW HAVEN**

DRAWING TITLE: **FOR INFORMATION ONLY**

PROJECT NO. 0300-0138
DRAWING NO. FIO-11
SHEET NO. 20.11.A2

DETAIL LOCATION CALLOUTS

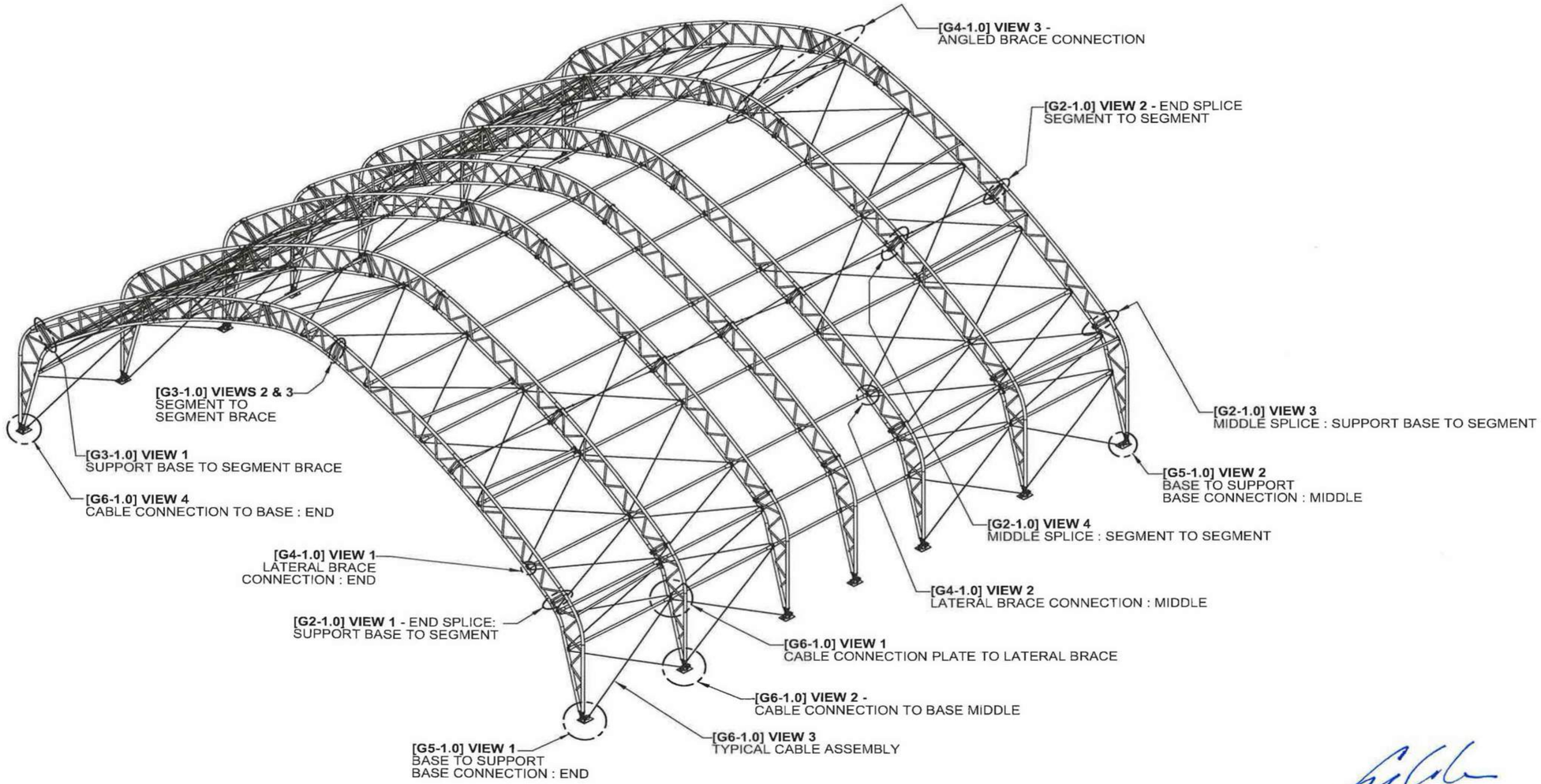

4/9/10

Developed By
A Division of Engineering Services & Products Co.
1440 18th Ave. SW
Oyersville, IA 52040
P: 563.875.6113
F: 563.875.2317
www.esapco.com/

Order Number: 4323239
Customer Number: 5970824

Naeem Akhter, PE, SE
Consulting Structural Engineer
7834 W 156th Street
Overland Park, KS 66223
(913) 685-2015 Off
(913) 685-2019 Fax

Structure SKU #: T083HKS0140800WF
Structure Size: 83' W x 80' L x 37'- 8 3/16" H
Structure Description: HERCULES TRUSS ARCH
Customer Information: ENVIR HEALTH & SAFETY, P.O. BOX 704, SUFFIELD, CT 06078
Customer Contact Phone: 860-668-0736
Customer Contact: ART BOEHM
Page Title: DETAIL LOCATION CALLOUT

PDMWorks Project: 4322239 ENVIR HEALTH & SAFETY

Drawings

Drawn By:	Creation Date:
WJM	3/16/2010

Revisions:

No.	By:	Revision Date:
1	---	---
2	---	---
3	---	---

Sheet: G1-1.0

NEW SHEET ADDED BY ADDENDUM NO. 2

FOR INFORMATION ONLY

REV.	DATE	REVISION DESCRIPTION
-	-	-
-	-	-
-	-	-
-	-	-
-	-	-
-	-	-
-	-	-

THE INFORMATION, INCLUDING ESTIMATED QUANTITIES OF WORK, SHOWN ON THESE SHEETS IS BASED ON LIMITED INVESTIGATIONS BY THE STATE AND IS IN NO WAY WARRANTED TO INDICATE THE CONDITIONS OF ACTUAL QUANTITIES OF WORK WHICH WILL BE REQUIRED.

NOT TO SCALE

STATE OF CONNECTICUT
DEPARTMENT OF TRANSPORTATION

SIGNATURE/ BLOCK:

PROJECT TITLE: **NEW HAVEN RAIL YARD FACILITIES IMPROVEMENTS WEST END YARD**

TOWN: **NEW HAVEN**

DRAWING TITLE: **FOR INFORMATION ONLY**

PROJECT NO. **0300-0138**
DRAWING NO. **FIO-12**
SHEET NO. **20.12.A2**

CONNECTION DETAILS

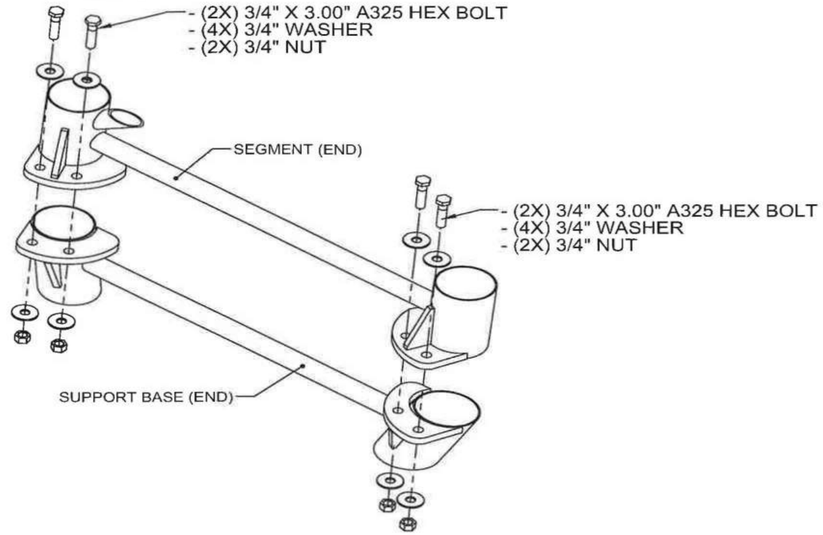

[G2-1.0] VIEW 1 - END SPLICE : SUPPORT BASE TO SEGMENT

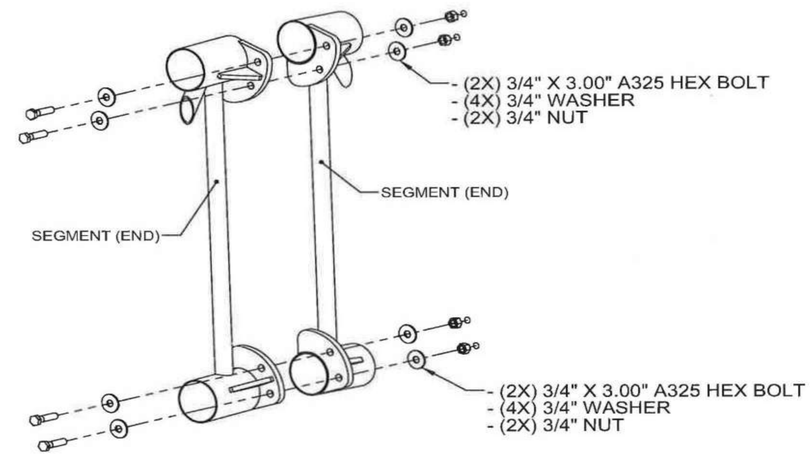

[G2-1.0] VIEW 2 - END SPLICE : SEGMENT TO SEGMENT

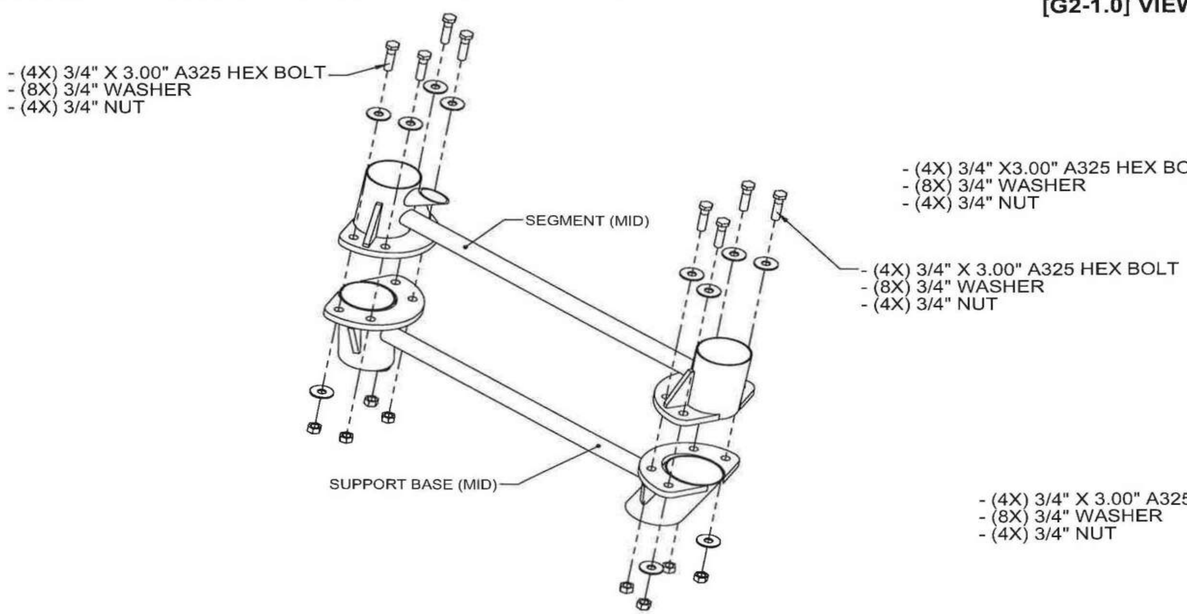

[G2-1.0] VIEW 3 - MIDDLE SPLICE : SUPPORT BASE TO SEGMENT

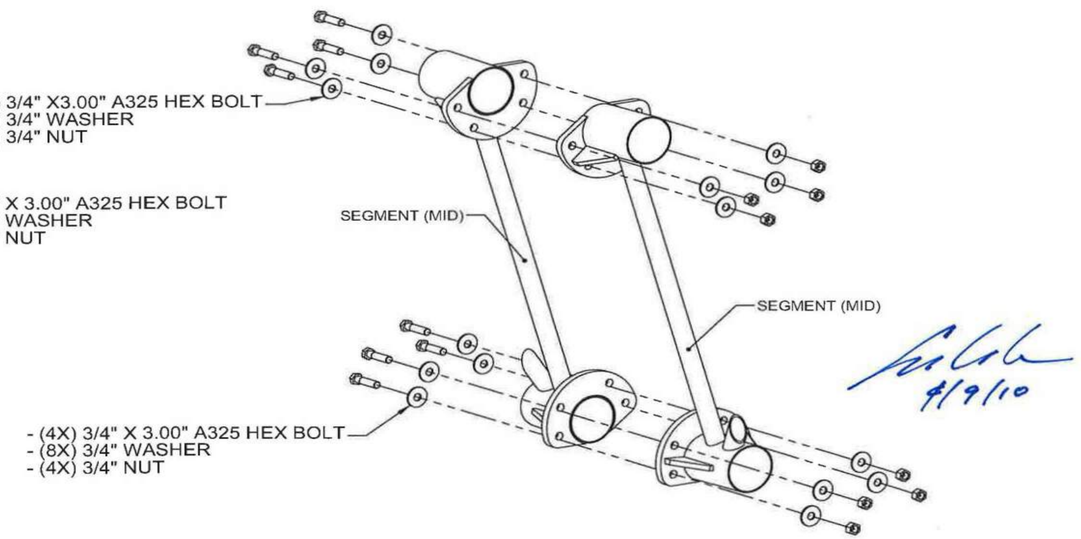

4/9/10

[G2-1.0] VIEW 4 - MIDDLE SPLICE : SEGMENT TO SEGMENT

Developed By
CoreSpec
A Division of Engineering Services & Products Co.
1480 18th Ave. SW
Dyersville, IA 52040
P 563.875.8113
F 563.875.2317
www.esapco.com/

Order Number: 4323239
Customer Number: 5970824

Naeem Akhter, PE, SE
Consulting Structural Engineer
7834 W 156th Street
Overland Park, KS 66223
(913) 685-2015 Off
(913) 685-2019 Fax

Structure SKU #: T083HKS014080WF	Structure Size: 83' W x 80' L x 37'- 8 3/16" H
Structure Description: HERCULES TRUSS ARCH	
Customer Information: ENVIR HEALTH & SAFETY, P.O. BOX 129, SUFFIELD, CT 06078	Customer Contact Phone: 860-668-0736
Customer Contact: ART BOEHM	Page Title: CONNECTION DETAILS

PDMWorks Project:	
4323239 ENVIR HEALTH & SAFETY	
Drawings	
Drawn By: WJM	Creation Date: 3/16/2010
Revisions:	
No.	By:	Revision Date:
1		
2		
3		

Sheet: **G2-1.0**

NEW SHEET ADDED BY ADDENDUM NO. 2

FOR INFORMATION ONLY

REV.	DATE	REVISION DESCRIPTION
-	-	-
-	-	-
-	-	-
-	-	-
-	-	-
-	-	-
-	-	-

THE INFORMATION, INCLUDING ESTIMATED QUANTITIES OF WORK, SHOWN ON THESE SHEETS IS BASED ON LIMITED INVESTIGATIONS BY THE STATE AND IS IN NO WAY WARRANTED TO INDICATE THE CONDITIONS OF ACTUAL QUANTITIES OF WORK WHICH WILL BE REQUIRED.

NOT TO SCALE

STATE OF CONNECTICUT
DEPARTMENT OF TRANSPORTATION

SIGNATURE/ BLOCK:

PROJECT TITLE: **NEW HAVEN RAIL YARD FACILITIES IMPROVEMENTS WEST END YARD**

TOWN: **NEW HAVEN**

DRAWING TITLE: **FOR INFORMATION ONLY**

PROJECT NO. **0300-0138**
DRAWING NO. **FIO-13**
SHEET NO. **20.13.A2**

CONNECTION DETAILS

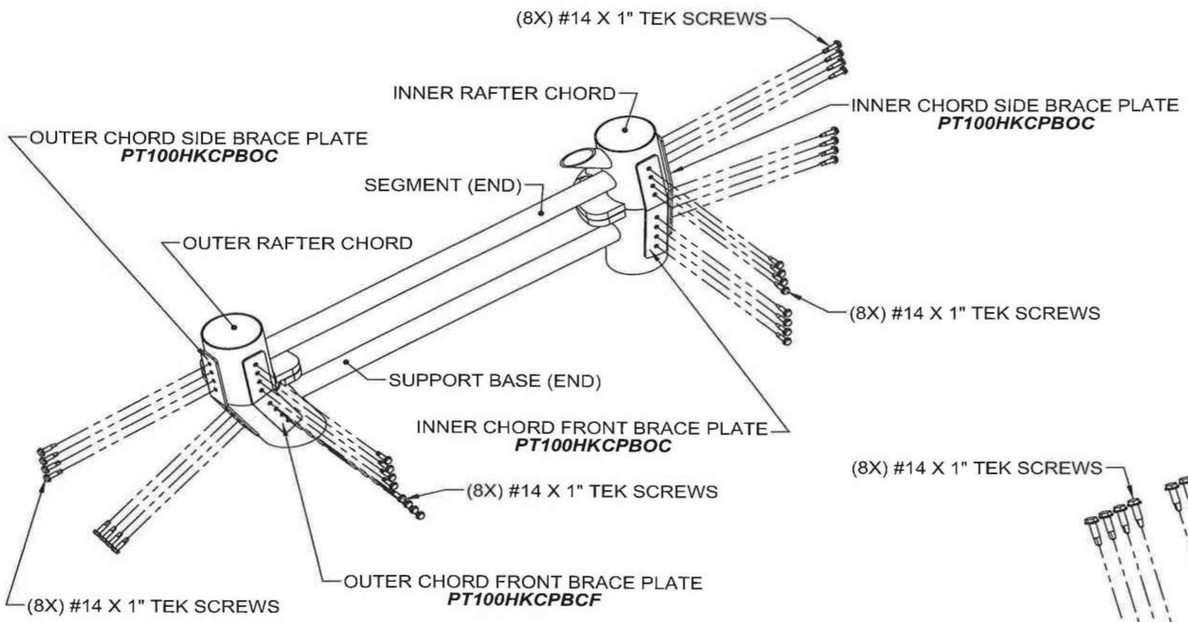

[G3-1.0] VIEW 1 - SUPPORT BASE TO SEGMENT BRACE

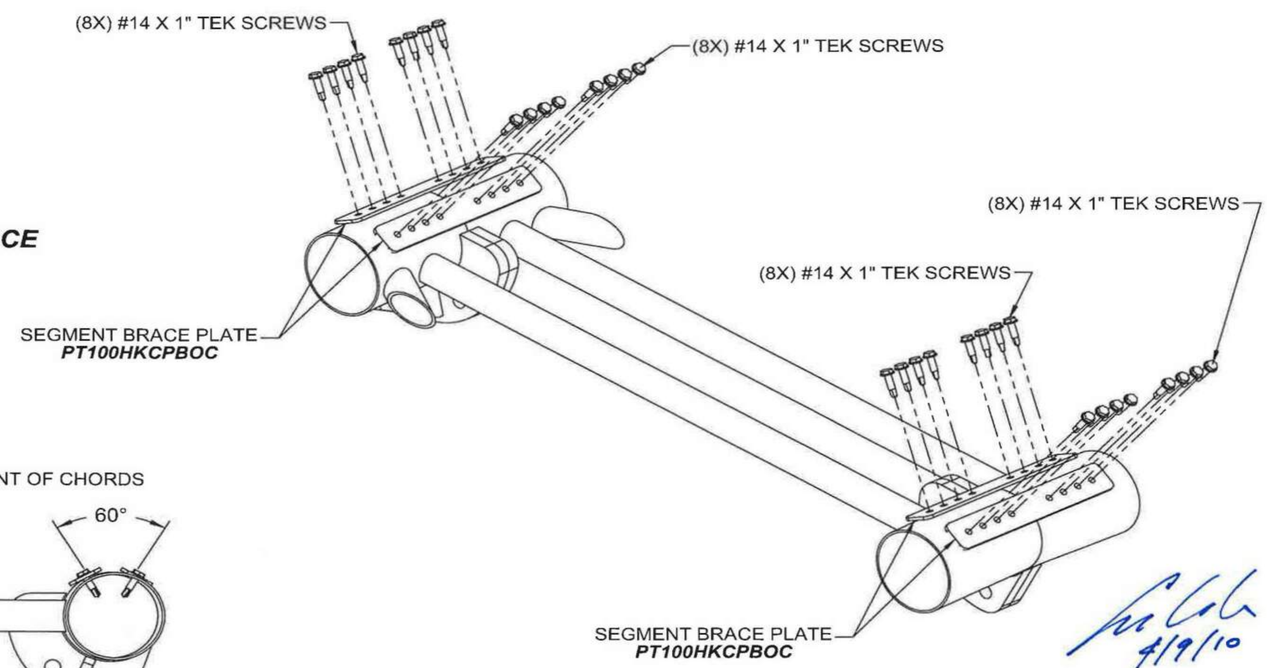

[G3-1.0] VIEW 3 - SEGMENT TO SEGMENT BRACE

PLATES SHOULD BE POSITIONED 30 DEGREES FROM CENTER OF FRONT OF CHORDS

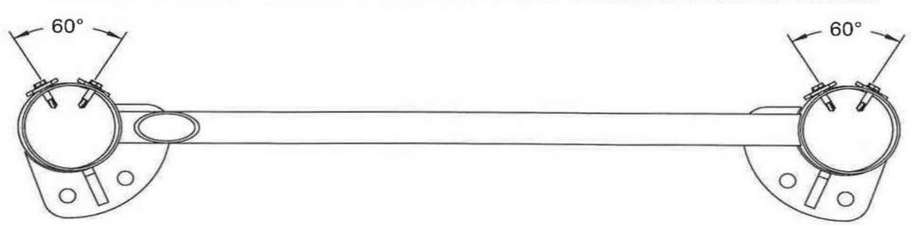

[G3-1.0] VIEW 2 - SEGMENT TO SEGMENT BRACE SIDE VIEW

Developed By
A Division of Engineering Services & Products Co.
1440 18th Ave. SW
Owensville, IA 50040
P: 563.875.6113
F: 563.875.2317
www.esapco.com/

Order Number: 4323239
Customer Number: 5970824

Naeem Akhter, PE, SE
Consulting Structural Engineer
7834 W 156th Street
Overland Park, KS 66223
(913) 685-2015 Off
(913) 685-2019 Fax

Structure SKU #: T083HKS014080WF	
Structure Size: 83' W x 80' L x 37'- 8 3/16" H	
Customer Information: ENVIR HEALTH & SAFETY P.O. BOX 129 SUFFIELD, CT 06078	Customer Contact Phone: 860-668-0736
Customer Contact: ART BOEHM	Structure Description: HERCULES TRUSS ARCH
Page Title: CONNECTION DETAILS	

PDMWorks Project:
Vault Project Here
Drawings

Drawn By:	Creation Date:
WJM	3/16/2010

Revisions:

No.	By:	Revision Date:
1		
2		
3		

Sheet: **G3-1.0**

NEW SHEET ADDED BY ADDENDUM NO. 2
FOR INFORMATION ONLY

REV.	DATE	REVISION DESCRIPTION
-	-	-
-	-	-
-	-	-
-	-	-
-	-	-
-	-	-
-	-	-

THE INFORMATION, INCLUDING ESTIMATED QUANTITIES OF WORK, SHOWN ON THESE SHEETS IS BASED ON LIMITED INVESTIGATIONS BY THE STATE AND IS IN NO WAY WARRANTED TO INDICATE THE CONDITIONS OF ACTUAL QUANTITIES OF WORK WHICH WILL BE REQUIRED.

NOT TO SCALE

STATE OF CONNECTICUT
DEPARTMENT OF TRANSPORTATION

SIGNATURE/ BLOCK:

PROJECT TITLE: **NEW HAVEN RAIL YARD FACILITIES IMPROVEMENTS WEST END YARD**

TOWN: **NEW HAVEN**

DRAWING TITLE: **FOR INFORMATION ONLY**

PROJECT NO. **0300-0138**
DRAWING NO. **FIO-14**
SHEET NO. **20.14.A2**

CONNECTION DETAILS

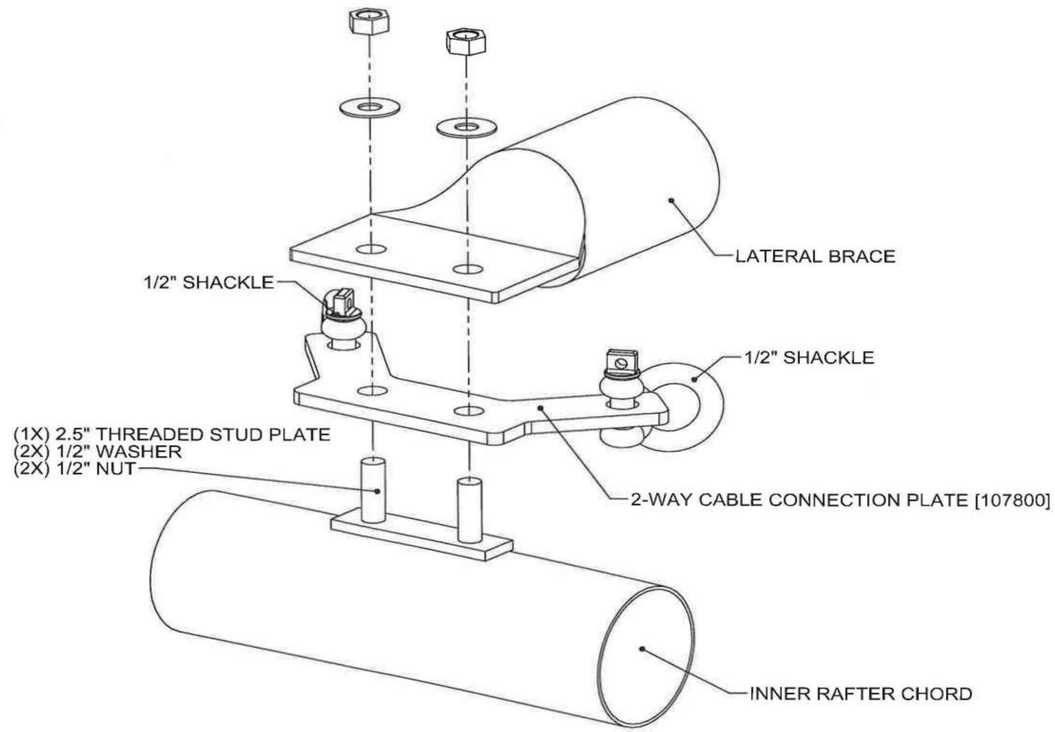

[G4-1.0] VIEW 1 - LATERAL BRACE CONNECTION : END

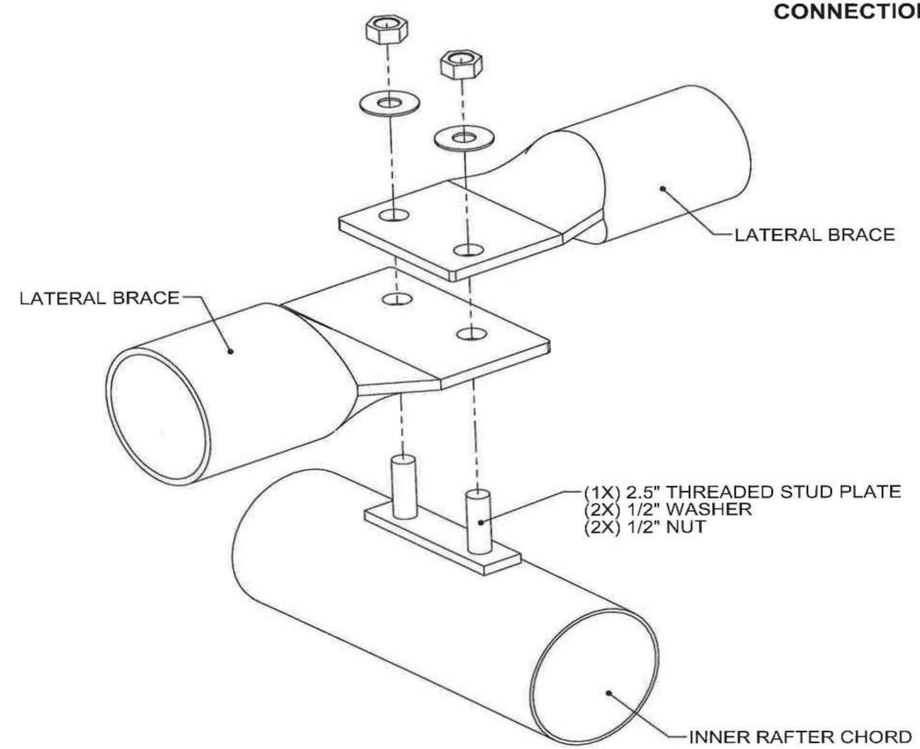

[G4-1.0] VIEW 2 - LATERAL BRACE CONNECTION : MIDDLE

PLEASE REFER TO PAGE G6-1.0 FOR CABLE CONNECTION PLATE TO LATERAL BRACE

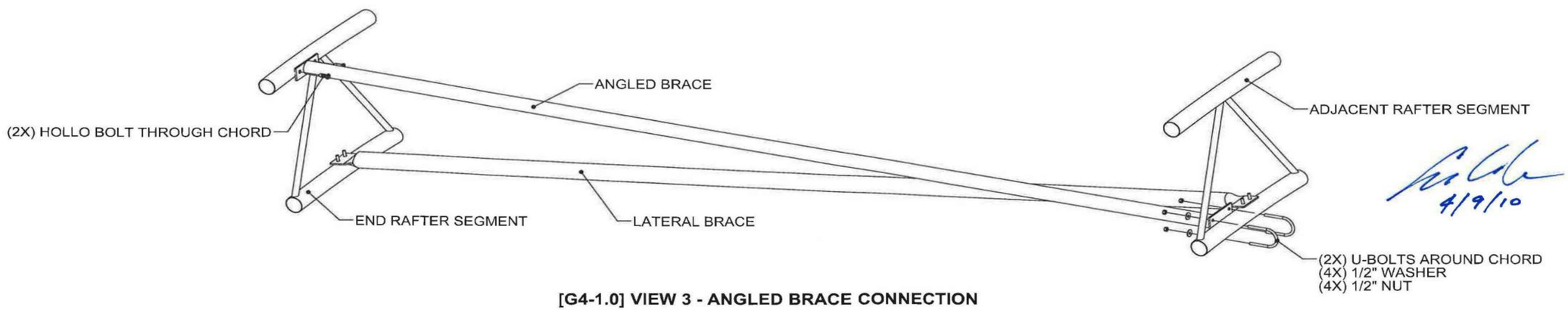

[G4-1.0] VIEW 3 - ANGLED BRACE CONNECTION

4/9/10

Developed By
A Division of Engineering Services & Products Co.
1440 18th Ave. SW
Dyersville, IA 52040
P: 563 875 8113
F: 563 875 2317
www.esapco.com/

Naeem Akhter, PE, SE
Consulting Structural Engineer
7834 W 156th Street
Overland Park, KS 66223
(913) 685-2015 Off
(913) 685-2019 Fax

Order Number: 4323239
Customer Number: 5970824

Customer Information: ENVIR HEALTH & SAFETY, P.O. BOX 729, SUFFIELD, CT 06078
Customer Contact: ART BOEHM
Customer Contact Phone: 860-668-0736
Page Title: CONNECTION DETAILS
Structure SKU #: T083HKS014080WF
Structure Size: 83' W x 80' L x 37'- 8 3/16" H
Structure Description: HERCULES TRUSS ARCH

PDMWorks Project: Vault Project Here
Drawings
Drawn By: WJM
Creation Date: 11-17-2009
Revisions:

No.	By:	Revision Date:
1		
2		
3		

Sheet: G4-1.0

NEW SHEET ADDED BY ADDENDUM NO. 2

FOR INFORMATION ONLY

REV.	DATE	REVISION DESCRIPTION
-	-	-
-	-	-
-	-	-
-	-	-
-	-	-
-	-	-
-	-	-

THE INFORMATION, INCLUDING ESTIMATED QUANTITIES OF WORK, SHOWN ON THESE SHEETS IS BASED ON LIMITED INVESTIGATIONS BY THE STATE AND IS IN NO WAY WARRANTED TO INDICATE THE CONDITIONS OF ACTUAL QUANTITIES OF WORK WHICH WILL BE REQUIRED.

NOT TO SCALE

STATE OF CONNECTICUT
DEPARTMENT OF TRANSPORTATION

SIGNATURE/ BLOCK:

PROJECT TITLE: NEW HAVEN RAIL YARD FACILITIES IMPROVEMENTS WEST END YARD

TOWN: NEW HAVEN

DRAWING TITLE: FOR INFORMATION ONLY

PROJECT NO. 0300-0138
DRAWING NO. FIO-15
SHEET NO. 20.15.A2

BASE CONNECTION DETAILS

***NOTE* :** IF COVER HAS A SINGLE POCKET ABOVE BASE, TWO (2) WINCHES WILL BE USED AS SHOWN. IF COVER HAS SINGLE POCKET ABOVE WINCH WITH ADDITIONAL POCKET BELOW WINCH, ONLY ONE (1) WINCH WILL BE ATACHED TO BASE AND ONE ADDITIONAL SECURING METHOD USED FOR BELOW BASE.

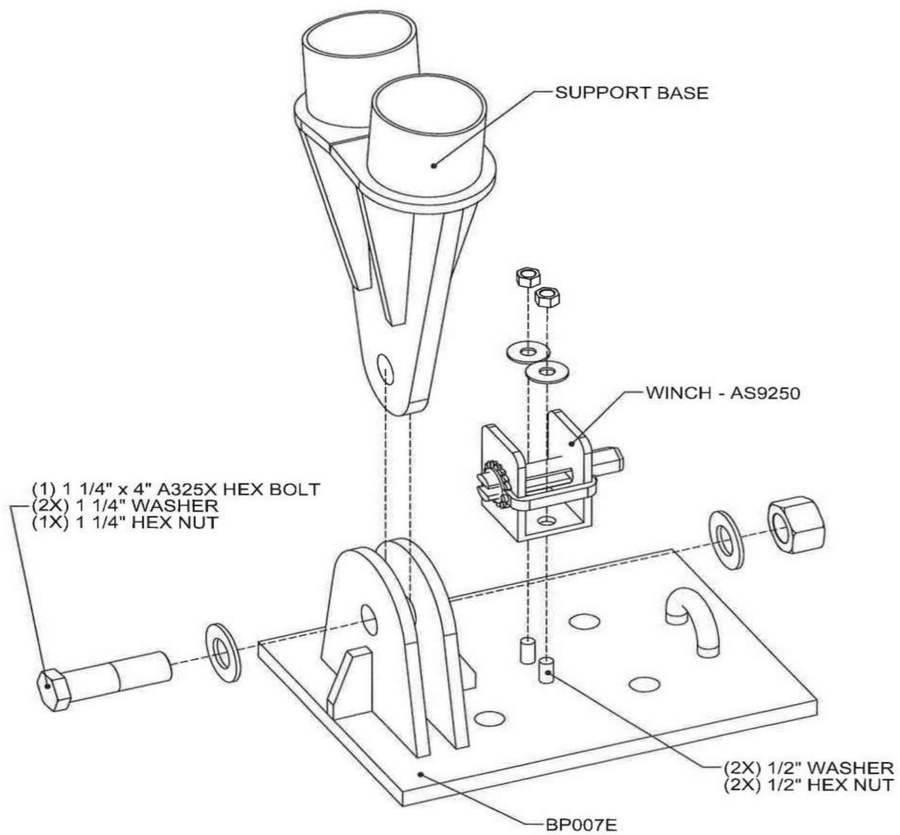

[G5-1.0] VIEW 1 - BASE TO SUPPORT BASE CONNECTION : END
PLEASE REFER TO G6-1.0 FOR CABLE CONNECTION TO BASE

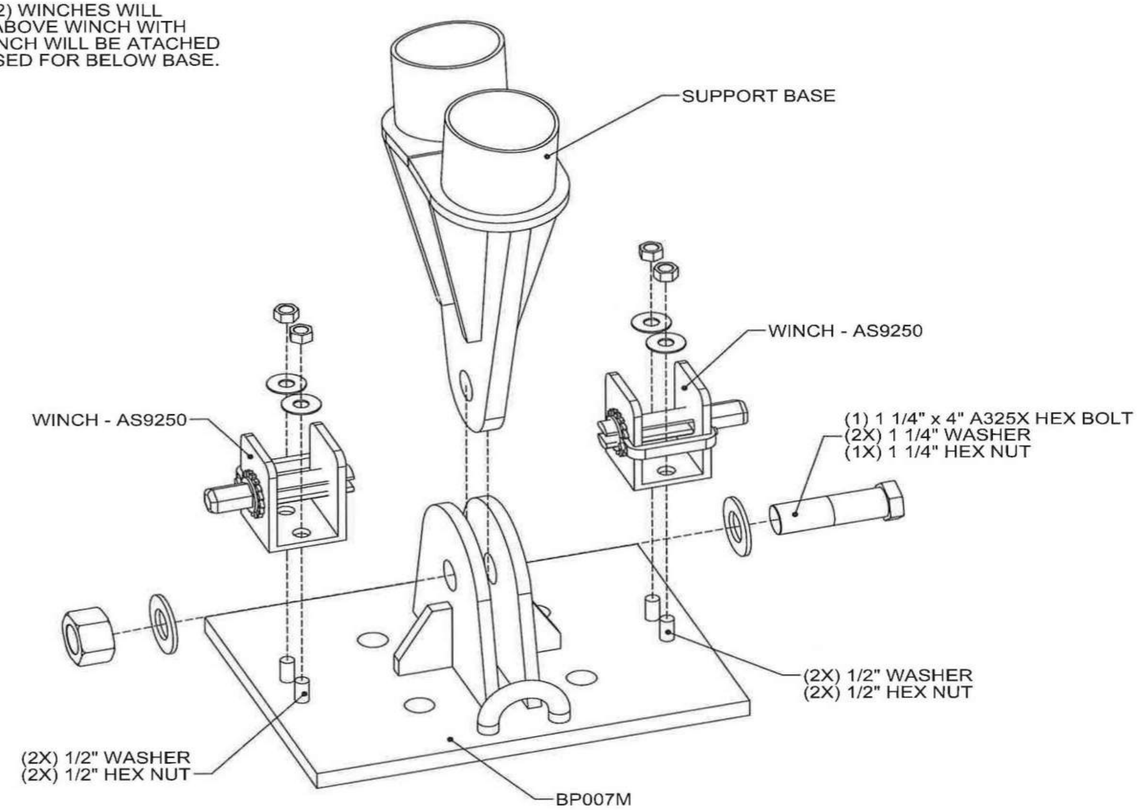

[G5-1.0] VIEW 2 - BASE TO SUPPORT BASE CONNECTION : MIDDLE
PLEASE REFER TO G6-1.0 FOR CABLE CONNECTION TO BASE

1/9/10

Developed By
A Division of Engineering Services & Products Co.
1440 18th Ave. SW
Dyersville, IA 52040
P: 563.875.6113
F: 563.875.2317
www.esspco.com/

Order Number: 4323239
Customer Number: 5970824

Naeem Akhter, PE, SE
Consulting Structural Engineer
7834 W 156th Street
Overland Park, KS 66223
(913) 685-2015 Off
(913) 685-2019 Fax

Structure SKU #: T083HKS014080WF
Structure Size: 83' W x 80' L x 37'- 8 3/16" H
Structure Description: HERCULES TRUSS ARCH
Customer Information: ENVIR HEALTH & SAFETY, P.O BOX 129, SUFFIELD, CT 06078
Customer Contact Phone: 860-668-0736
Customer Contact: ART BOEHM
Page Title: BASE CONNECTION DETAILS

PDMWorks Project:

Drawings

Drawn By:	Creation Date:
WJM	3/16/2010

Revisions:

No.	By:	Revision Date:
1		
2		
3		

Sheet: **G5-1.0**

NEW SHEET ADDED BY ADDENDUM NO. 2

FOR INFORMATION ONLY

REV.	DATE	REVISION DESCRIPTION
-	-	-
-	-	-
-	-	-
-	-	-
-	-	-
-	-	-
-	-	-

THE INFORMATION, INCLUDING ESTIMATED QUANTITIES OF WORK, SHOWN ON THESE SHEETS IS BASED ON LIMITED INVESTIGATIONS BY THE STATE AND IS IN NO WAY WARRANTED TO INDICATE THE CONDITIONS OF ACTUAL QUANTITIES OF WORK WHICH WILL BE REQUIRED.

NOT TO SCALE

STATE OF CONNECTICUT
DEPARTMENT OF TRANSPORTATION

SIGNATURE/ BLOCK:

PROJECT TITLE: **NEW HAVEN RAIL YARD FACILITIES IMPROVEMENTS WEST END YARD**

TOWN: **NEW HAVEN**

DRAWING TITLE: **FOR INFORMATION ONLY**

PROJECT NO. **0300-0138**
DRAWING NO. **FIO-16**
SHEET NO. **20.16.A2**

CABLE LENGTH DETAILS

NOTE: 1. HORIZONTALLY ADJACENT CABLE SPANS ARE EQUIDISTANT
(EXCEPTING GROUND LEVEL END BAYS)

2. STRUCTURE IS SYMMETRICAL; LEFT SIDE CABLE SPECIFICATIONS ARE IDENTICAL

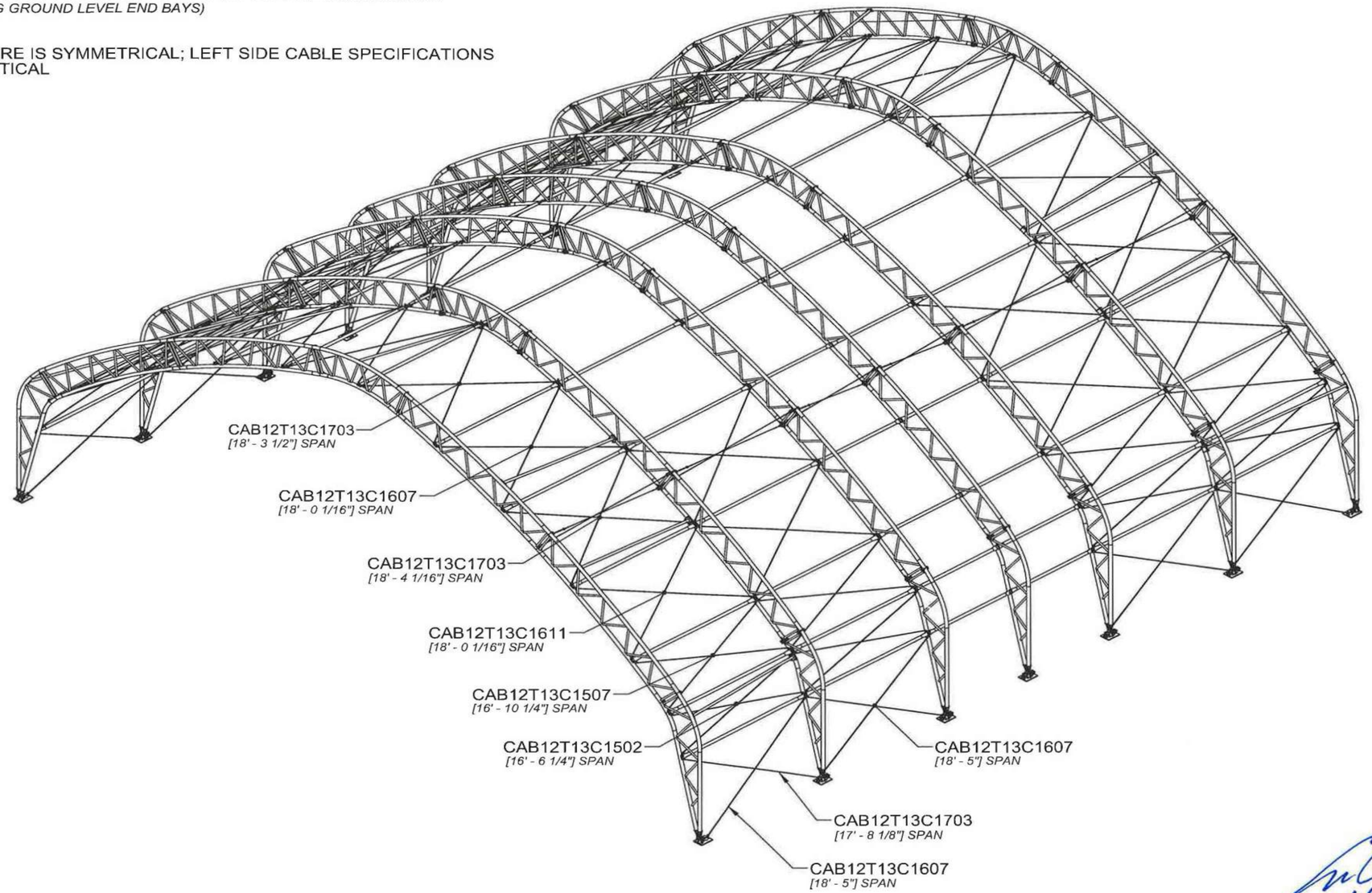

4/9/10

Developed By
A Division of Engineering Services & Products Co.
1449 18th Ave. SW
Overville, IA 52040
P: 563.875.6113
F: 563.875.2317
www.estapco.com/

Order Number: 4323239
Customer Number: 5970824

Naeem Akhter, PE, SE
Consulting Structural Engineer
7834 W 156th Street
Overland Park, KS 66223
(913) 685-2015 Off
(913) 685-2019 Fax

Structure SKU #: T083HKS014080WF
Structure Size: 83' W x 80' L x 37'- 8 3/16" H
Structure Description: HERCULES TRUSS ARCH
Customer Information: ENVIR HEALTH & SAFETY, P.O. BOX 129, SUFFIELD, CT 06078
Customer Contact Phone: 860-668-0736
Customer Contact: ART BOEHM
Page Title: CABLE LENGTH DETAILS

PDMWorks Project:
Drawings
Drawn By: WJM
Creation Date: 3/16/2010
Revisions:

No	By:	Revision Date
1		
2		
3		

Sheet: G7-1.0

NEW SHEET ADDED BY ADDENDUM NO. 2

FOR INFORMATION ONLY

REV.	DATE	REVISION DESCRIPTION
-	-	-
-	-	-
-	-	-
-	-	-
-	-	-
-	-	-
-	-	-

THE INFORMATION, INCLUDING ESTIMATED QUANTITIES OF WORK, SHOWN ON THESE SHEETS IS BASED ON LIMITED INVESTIGATIONS BY THE STATE AND IS IN NO WAY WARRANTED TO INDICATE THE CONDITIONS OF ACTUAL QUANTITIES OF WORK WHICH WILL BE REQUIRED.

NOT TO SCALE

STATE OF CONNECTICUT
DEPARTMENT OF TRANSPORTATION

SIGNATURE/ BLOCK:

PROJECT TITLE: **NEW HAVEN RAIL YARD FACILITIES IMPROVEMENTS WEST END YARD**

TOWN: **NEW HAVEN**

DRAWING TITLE: **FOR INFORMATION ONLY**

PROJECT NO. 0300-0138
DRAWING NO. FIO-17
SHEET NO. 20.17.A2

SWAY CABLE DETAILS

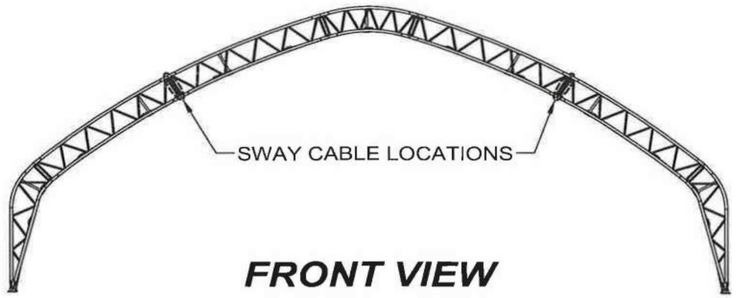

FRONT VIEW

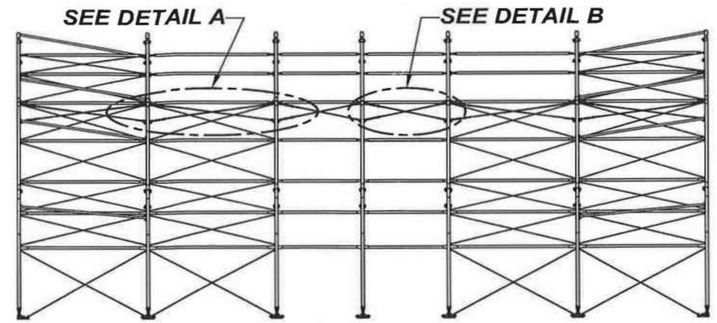

SIDE VIEW

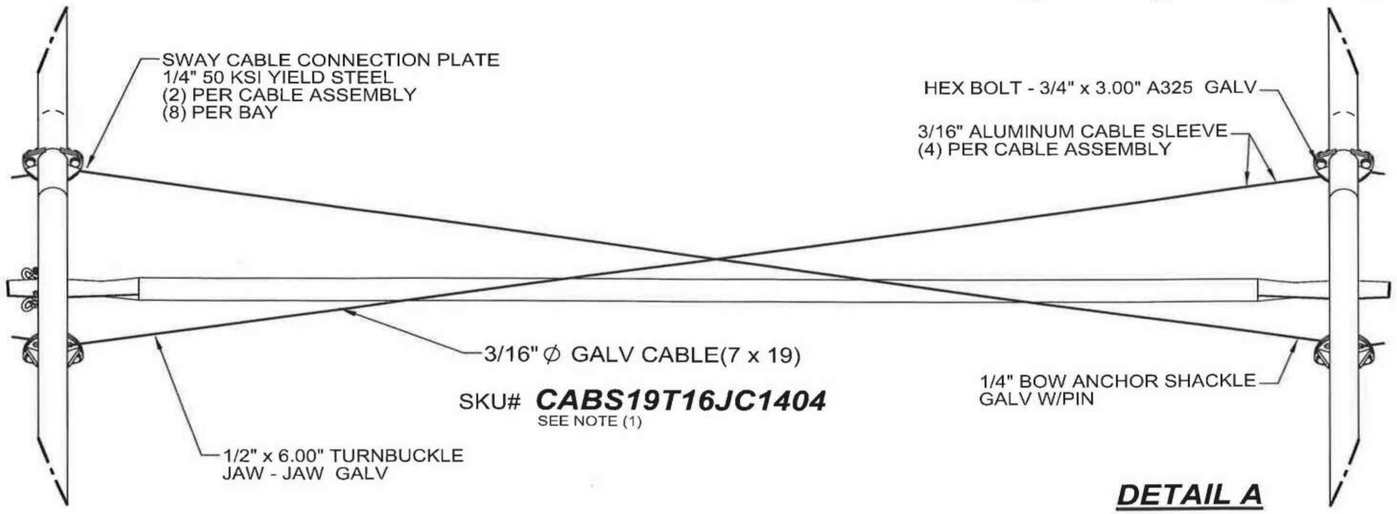

DETAIL A

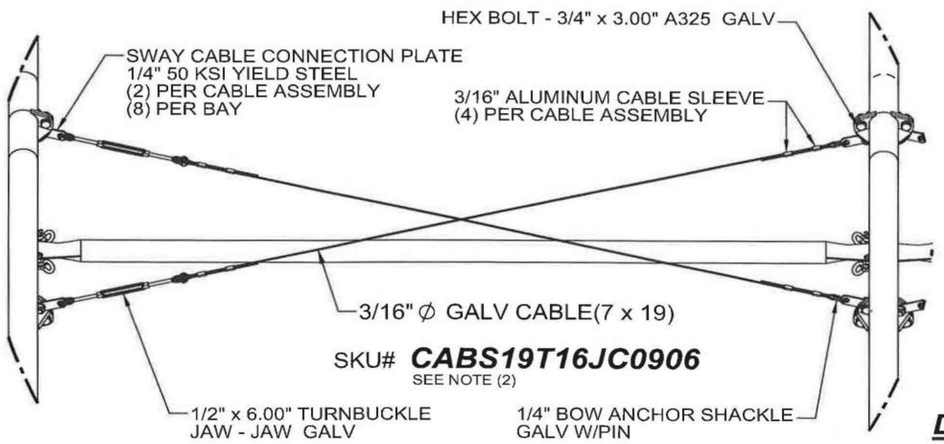

DETAIL B

NOTES:

1. QUANTITY OF FOUR(4) SKU# ***CABS19T16JC1404*** ASSEMBLIES REQ'D PER EACH 4.572 METER BAY; CROSS BETWEEN GABLE WELD'TS AS SHOWN
2. QUANTITY OF FOUR(4) SKU# ***CABS19T16JC0906*** ASSEMBLIES REQ'D PER EACH 3.048 METER BAY; CROSS BETWEEN GABLE WELD'TS AS SHOWN

4/9/10

Developed By
A Division of Engineering Services & Products Co.
1440 18th Ave. SW
Cyclone, IA 52040
P: 563.875.5113
F: 563.875.2317
www.esapco.com/

Order Number: 4323239
Customer Number: 5970824

Naeem Akhter, PE, SE
Consulting Structural Engineer
7834 W 156th Street
Overland Park, KS 66223
(913) 685-2015 Off
(913) 685-2019 Fax

Structure SKU #: T083HKS014080WF
Structure Size: 83' W x 80' L x 37'- 8 3/16" H
Structure Description: HERCULES TRUSS ARCH
Customer Information: ENVIR HEALTH & SAFETY, P.O. BOX 129, SUFFIELD, CT 06078
Customer Contact Phone: 860-668-0736
Customer Contact: ART BOEHM
Page Title: SWAY CABLE DETAILS

PDMWorks Project:	
Vault Project Here	
Drawings	
Drawn By:	Creation Date:
WJM	3/16/2010
Revisions:	
No. By:	Revision Date:
1	
2	
3	

Sheet: **G8-1.0**

NEW SHEET ADDED BY ADDENDUM NO.2
FOR INFORMATION ONLY

REV.	DATE	REVISION DESCRIPTION
-	-	-
-	-	-
-	-	-
-	-	-
-	-	-
-	-	-
-	-	-

THE INFORMATION, INCLUDING ESTIMATED QUANTITIES OF WORK, SHOWN ON THESE SHEETS IS BASED ON LIMITED INVESTIGATIONS BY THE STATE AND IS IN NO WAY WARRANTED TO INDICATE THE CONDITIONS OF ACTUAL QUANTITIES OF WORK WHICH WILL BE REQUIRED.

NOT TO SCALE

STATE OF CONNECTICUT
DEPARTMENT OF TRANSPORTATION

SIGNATURE/ BLOCK:

PROJECT TITLE: **NEW HAVEN RAIL YARD FACILITIES IMPROVEMENTS WEST END YARD**

TOWN: **NEW HAVEN**

DRAWING TITLE: **FOR INFORMATION ONLY**

PROJECT NO. **0300-0138**
DRAWING NO. **FIO-18**
SHEET NO. **20.18.A2**

CONDUIT ASSEMBLY

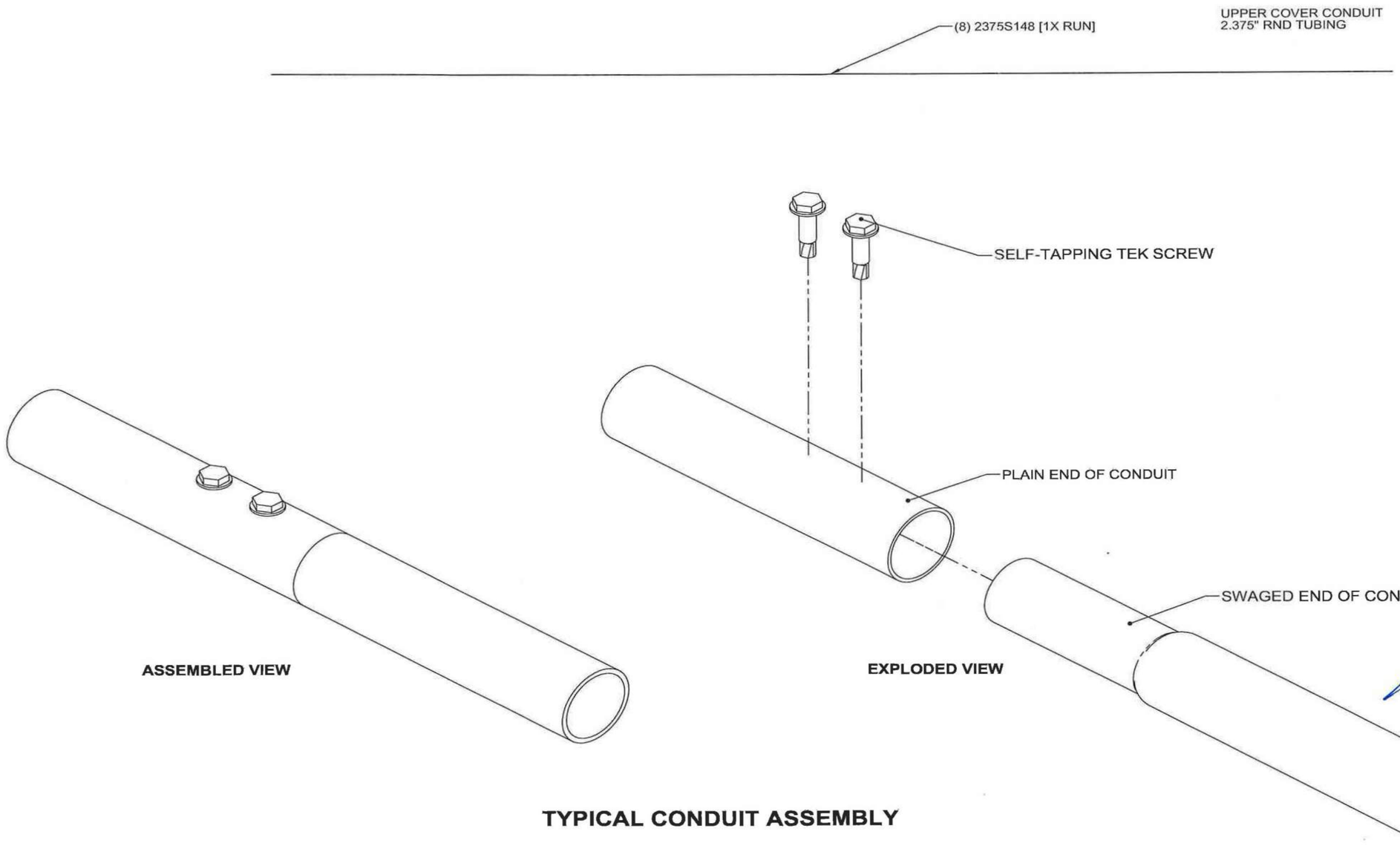

TYPICAL CONDUIT ASSEMBLY

Developed By
A Division of Engineering Services & Products Co.
1440 18th Ave. SW
Dyersville, IA 52040
P: 563.875.6113
F: 563.875.2317
www.esapco.com/

Order Number: 4323239
Customer Number: 5970824

Naeem Akhter, PE, SE
Consulting Structural Engineer
7834 W 156th Street
Overland Park, KS 66223
(913) 685-2015 Off
(913) 685-2019 Fax

Structure SKU #: T083HKS014080WF
Structure Size: 83' W x 80' L x 37'- 8 3/16" H
Structure Description: HERCULES TRUSS ARCH
Customer Information: ENVIR HEALTH & SAFETY, P.O. BOX 129, SUFFIELD, CT 06078
Customer Contact Phone: 860-668-0736
Customer Contact: ART BOEHM
Page Title: CONDUIT ASSEMBLY

PDMWorks Project:
Drawings
Drawn By: WJM
Creation Date: 3/16/2010
Revisions:

No	By:	Revision Date:
1		
2		
3		

Sheet: G9-1.0

NEW SHEET ADDED BY ADDENDUM NO. 2

FOR INFORMATION ONLY

REV.	DATE	REVISION DESCRIPTION
-	-	-
-	-	-
-	-	-
-	-	-
-	-	-
-	-	-
-	-	-

THE INFORMATION, INCLUDING ESTIMATED QUANTITIES OF WORK, SHOWN ON THESE SHEETS IS BASED ON LIMITED INVESTIGATIONS BY THE STATE AND IS IN NO WAY WARRANTED TO INDICATE THE CONDITIONS OF ACTUAL QUANTITIES OF WORK WHICH WILL BE REQUIRED.

NOT TO SCALE

STATE OF CONNECTICUT
DEPARTMENT OF TRANSPORTATION

SIGNATURE/ BLOCK:

PROJECT TITLE: **NEW HAVEN RAIL YARD FACILITIES IMPROVEMENTS WEST END YARD**

TOWN: **NEW HAVEN**

DRAWING TITLE: **FOR INFORMATION ONLY**

PROJECT NO. 0300-0138
DRAWING NO. FIO-19
SHEET NO. 20.19.A2

FOUNDATION DETAILS (BASE PLATES)

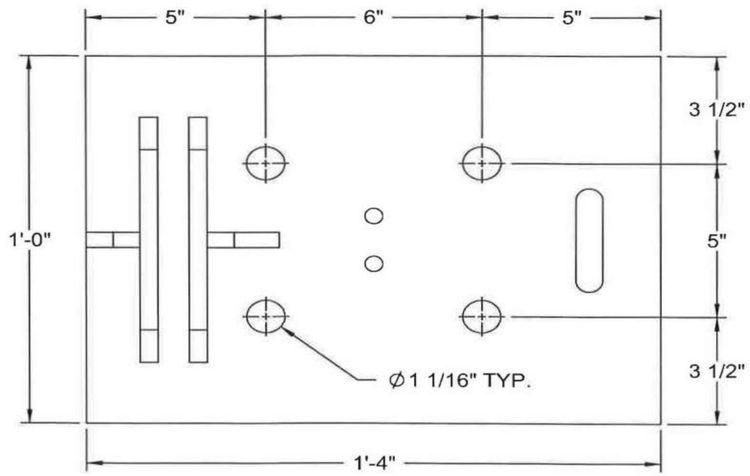

BP007E
END BASE PLATE

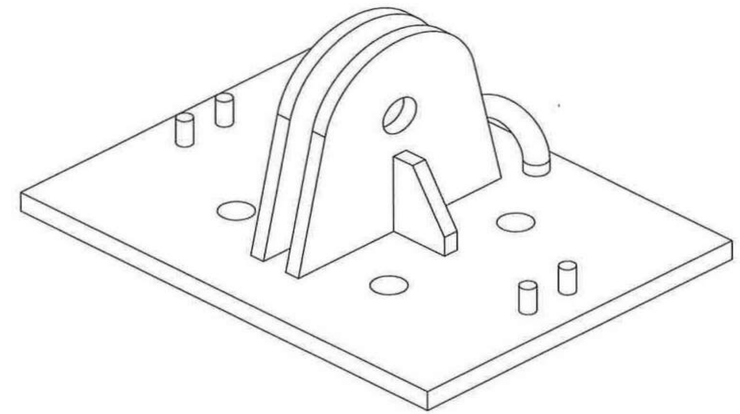

BP007M
MID BASE PLATE

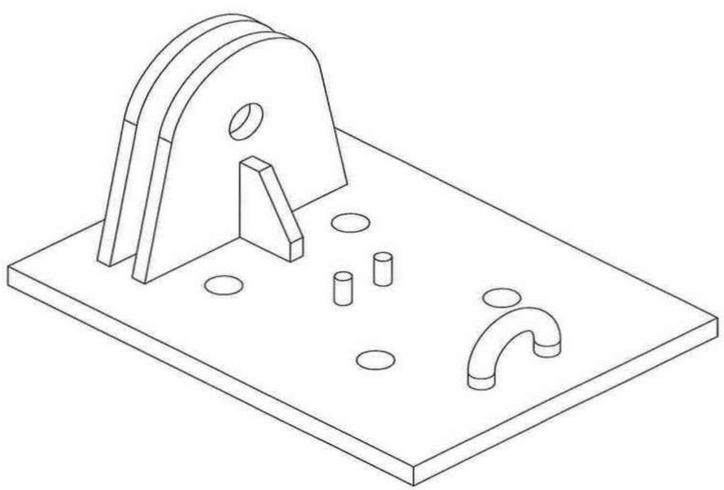

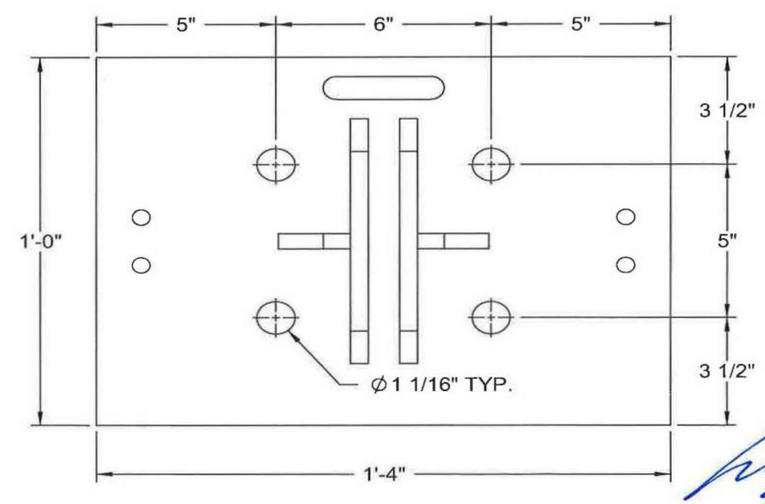

9/9/10

Developed By
A Division of Engineering Services & Products Co.
1440 18th Ave. SW
Dyersville, IA 52040
P 563.875.6113
F 563.875.2317
www.esapco.com/

Order Number: 4323239
Customer Number: 5970824

Naeem Akhter, PE, SE
Consulting Structural Engineer
7834 W 156th Street
Overland Park, KS 66223
(913) 685-2015 Off
(913) 685-2019 Fax

Structure SKU #: T083HKS014080WF
Structure Size: 83' W x 80' L x 37'- 8 3/16" H
Structure Description: HERCULES TRUSS ARCH
Customer information: ENVIR HEALTH & SAFETY, P.O. BOX 129, SUFFIELD, CT 06078
Customer Contact: ART BOEHM
Customer Contact Phone: 860-668-0736
Page Title: FOUNDATION DETAILS (BASE PLATES)

PDMWorks Project:
Vault Project Here
Drawings

Drawn By:	Creation Date:
WJM	3/16/2010

Revisions:

No.	By:	Revision Date:
1	---	---
2	---	---
3	---	---

Sheet: **H1-1.0**

NEW SHEET ADDED BY ADDENDUM NO. 2

FOR INFORMATION ONLY

REV.	DATE	REVISION DESCRIPTION
-	-	-
-	-	-
-	-	-
-	-	-
-	-	-
-	-	-
-	-	-

THE INFORMATION, INCLUDING ESTIMATED QUANTITIES OF WORK, SHOWN ON THESE SHEETS IS BASED ON LIMITED INVESTIGATIONS BY THE STATE AND IS IN NO WAY WARRANTED TO INDICATE THE CONDITIONS OF ACTUAL QUANTITIES OF WORK WHICH WILL BE REQUIRED.

NOT TO SCALE

STATE OF CONNECTICUT
DEPARTMENT OF TRANSPORTATION

SIGNATURE/ BLOCK:

PROJECT TITLE: **NEW HAVEN RAIL YARD FACILITIES IMPROVEMENTS WEST END YARD**

TOWN: **NEW HAVEN**

DRAWING TITLE: **FOR INFORMATION ONLY**

PROJECT NO. **0300-0138**
DRAWING NO. **FIO-20**
SHEET NO. **20.20.A2**

EW083HKS0151DWF

83' HK END WALL 14' x14' DOOR; 48" x 80" UTILITY DOOR
& TWO 36" SQUARE WALL LOUVERS

NOTE:

ALL DOORS MUST BE CLOSED AND SECURED DURING HIGH WIND EVENTS (WIND SPEEDS > 70 MPH)

Content Guide:

AA1-1.0.....COVER PAGE
BB1-1.0.....MATERIAL SPECIFICATIONS
CC1-1.0.....PART LOCATIONS & LAYOUT
DD1-1.0.....CONNECTION DETAILS
EE1-1.0.....ANCHOR HOLE LAYOUT

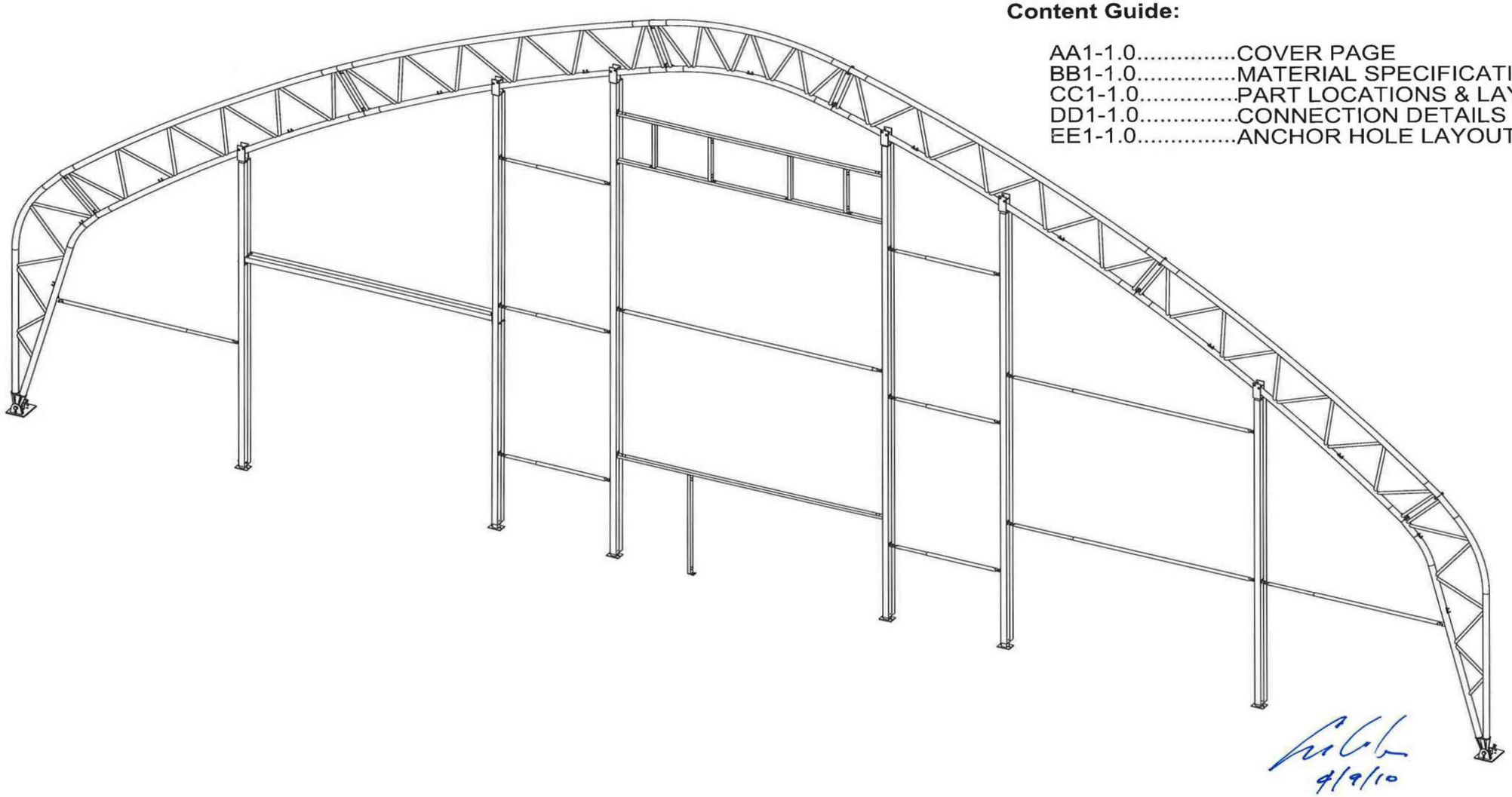

9/9/10

Developed By:
A Division of Engineering Services & Products Co.
1440 18th Ave. SW
Dyersville, IA 52040
P: 563.875.8113
F: 563.875.2317
www.asapco.com/

Order Number: 4323239
Customer Number: 5970824

Naeem Akhter, PE, SE
Consulting Structural Engineer
7834 W 156th Street
Overland Park, KS 66223
(913) 685-2015 Off
(913) 685-2019 Fax

Structure SKU #: EW083HKS0151WF
Structure Size: 83' W x 80' L x 37'-8" H
Structure Description: HERCULES TRUSS ARCH END WALL

Customer Information:
ENVIR HEALTH & SAFETY SERVICE
BIDDY LOPEZ
SUFFIELD, CT 06078-0129

Customer Contact Phone: 860-668-0736
Customer Contact: ART BOEHM
Page Title: COVER PAGE

PDMWorks Project:	
4323239 ENVIR HEALTH & SAFETY	
Drawings	
Drawn By:	Creation Date:
WJM	3/22/2010
Revisions:	
No. By:	Revision Date:
1 ---	---
2 ---	---
3 ---	---

Sheet: **AA1-1.0**

NEW SHEET ADDED BY ADDENDUM NO. 2

FOR INFORMATION ONLY

REV.	DATE	REVISION DESCRIPTION
-	-	-
-	-	-
-	-	-
-	-	-
-	-	-
-	-	-
-	-	-

THE INFORMATION, INCLUDING ESTIMATED QUANTITIES OF WORK, SHOWN ON THESE SHEETS IS BASED ON LIMITED INVESTIGATIONS BY THE STATE AND IS IN NO WAY WARRANTED TO INDICATE THE CONDITIONS OF ACTUAL QUANTITIES OF WORK WHICH WILL BE REQUIRED.

NOT TO SCALE

STATE OF CONNECTICUT
DEPARTMENT OF TRANSPORTATION

SIGNATURE/ BLOCK:

PROJECT TITLE: **NEW HAVEN RAIL YARD FACILITIES IMPROVEMENTS WEST END YARD**

TOWN: **NEW HAVEN**

DRAWING TITLE: **FOR INFORMATION ONLY**

PROJECT NO. **0300-0138**
DRAWING NO. **FIO-21**
SHEET NO. **20.21.A2**

MATERIAL SPECIFICATIONS

MARK	DESCRIPTION	MATERIAL
COLUMNS		
C1	EWC2P246G08	4" x 8GA 2-PLY SQUARE TUBE GALV - 246" LONG
C2	EWC2P348G08	4" x 8GA 2-PLY SQUARE TUBE GALV - 348" LONG
C3	EWC2P382G08	4" x 8GA 2-PLY SQUARE TUBE GALV - 382" LONG
HEADER		
H	EWH2P16725G08	4" x 8GA 2-PLY SQUARE TUBE GALV - 167.25" LONG
TELESCOPING PURLINS		
A1	200TP050	2.00" ∅ TUBE 9GA GALV - 50" LONG
B1	200TP108	2.00" ∅ TUBE 9GA GALV - 108" LONG
C1	2375TP050	2.375" ∅ TUBE 14GA GALV - 50" LONG
D1	2375TP085	2.375" ∅ TUBE 14GA GALV - 85" LONG
E1	2375TP120	2.375" ∅ TUBE 14GA GALV - 120" LONG
F1	2375TP172	2.375" ∅ TUBE 14GA GALV - 172" LONG
INSERTS		
F	106762	3.5" x 16" 8GA SQUARE TUBE/ 3/8" STEEL PLATE
T	106757	3.5" x 16" 14GA SQUARE TUBE/ 3/8" STEEL PLATE
BRACKETS		
B	106755	1/8" STEEL PLATE
HB	EWHB2P	3/16" STEEL PLATE

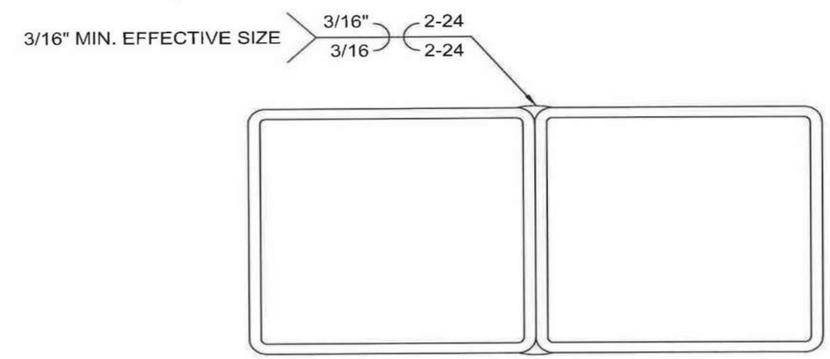

2-PLY PIPE WELD DETAIL

PLEASE REFER TO PAGE [CC1-1.0] FOR PART LOCATIONS.

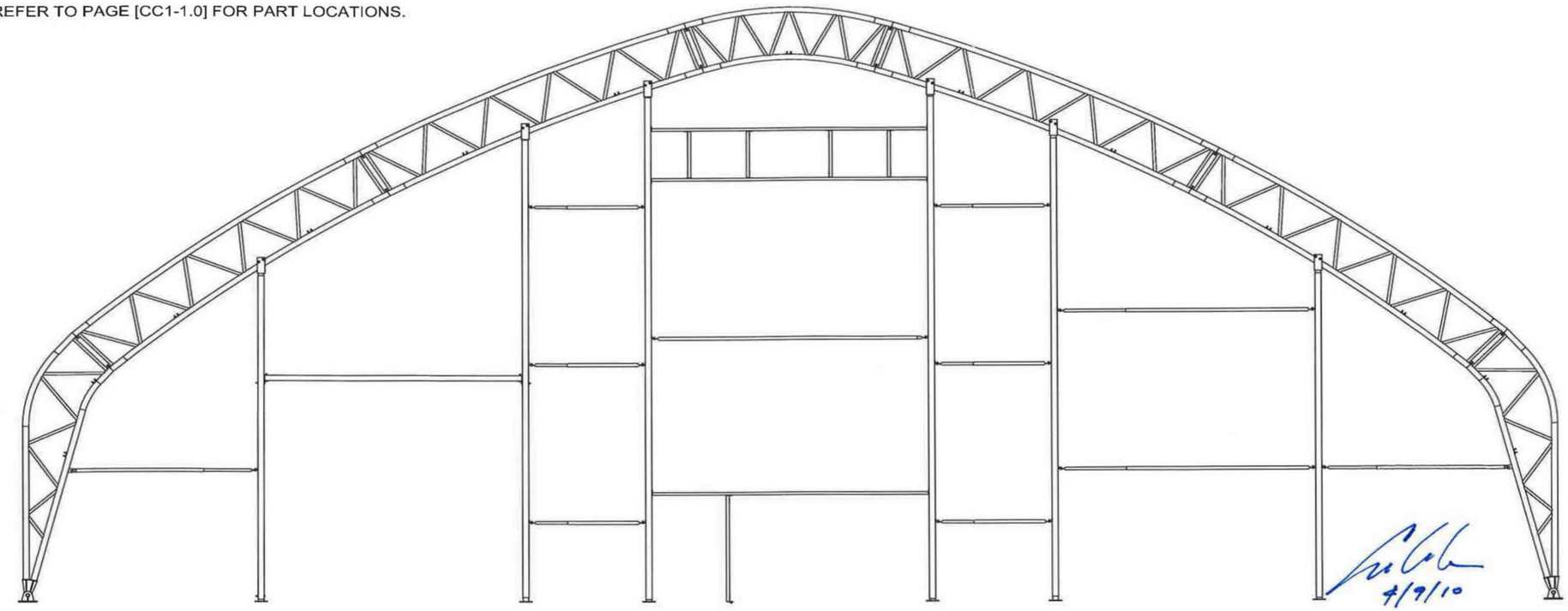

4/9/10

Developed By
A Division of Engineering Services & Products Co.
1440 18th Ave. SW
Osceola, IA 50049
P: 563.875.6113
F: 563.875.2317
www.esandpco.com

Order Number: 4323239

Customer Number: 5970824

Naeem Akhter, PE, SE
Consulting Structural Engineer
7834 W 156th Street
Overland Park, KS 66223
(913) 685-2015 Off
(913) 685-2019 Fax

Customer Information:
ENVIR HEALTH & SAFETY SERVICE
B002 DLV PT BC 29-6
SUFFIELD, CT 06078-0129

Customer Contact: ART BOEHM

Customer Contact Phone: 860-668-0736

Page Title: MATERIAL SPECIFICATIONS

Structure SKU #: EW083HKS0151WF

Structure Size: 83' W x 80' L x 37'-8" H

Structure Description: HERCULES TRUSS ARCH END WALL

PDMWorks Project: 4323239 ENVIR HEALTH & SAFETY

Drawings

Drawn By:	Creation Date:
WJM	3/22/2010

Revisions:

No	By:	Revision Date:
1	---	---
2	---	---
3	---	---

Sheet: **BB1-1.0**

NEW SHEET ADDED BY ADDENDUM NO. 2

FOR INFORMATION ONLY

REV.	DATE	REVISION DESCRIPTION
-	-	-
-	-	-
-	-	-
-	-	-
-	-	-
-	-	-
-	-	-

THE INFORMATION, INCLUDING ESTIMATED QUANTITIES OF WORK, SHOWN ON THESE SHEETS IS BASED ON LIMITED INVESTIGATIONS BY THE STATE AND IS IN NO WAY WARRANTED TO INDICATE THE CONDITIONS OF ACTUAL QUANTITIES OF WORK WHICH WILL BE REQUIRED.

NOT TO SCALE

STATE OF CONNECTICUT
DEPARTMENT OF TRANSPORTATION

SIGNATURE/ BLOCK:

PROJECT TITLE: **NEW HAVEN RAIL YARD FACILITIES IMPROVEMENTS WEST END YARD**

TOWN: **NEW HAVEN**

DRAWING TITLE: **FOR INFORMATION ONLY**

PROJECT NO. **0300-0138**

DRAWING NO. **FIO-22**

SHEET NO. **20.22.A2**

PART LOCATIONS & LAYOUT

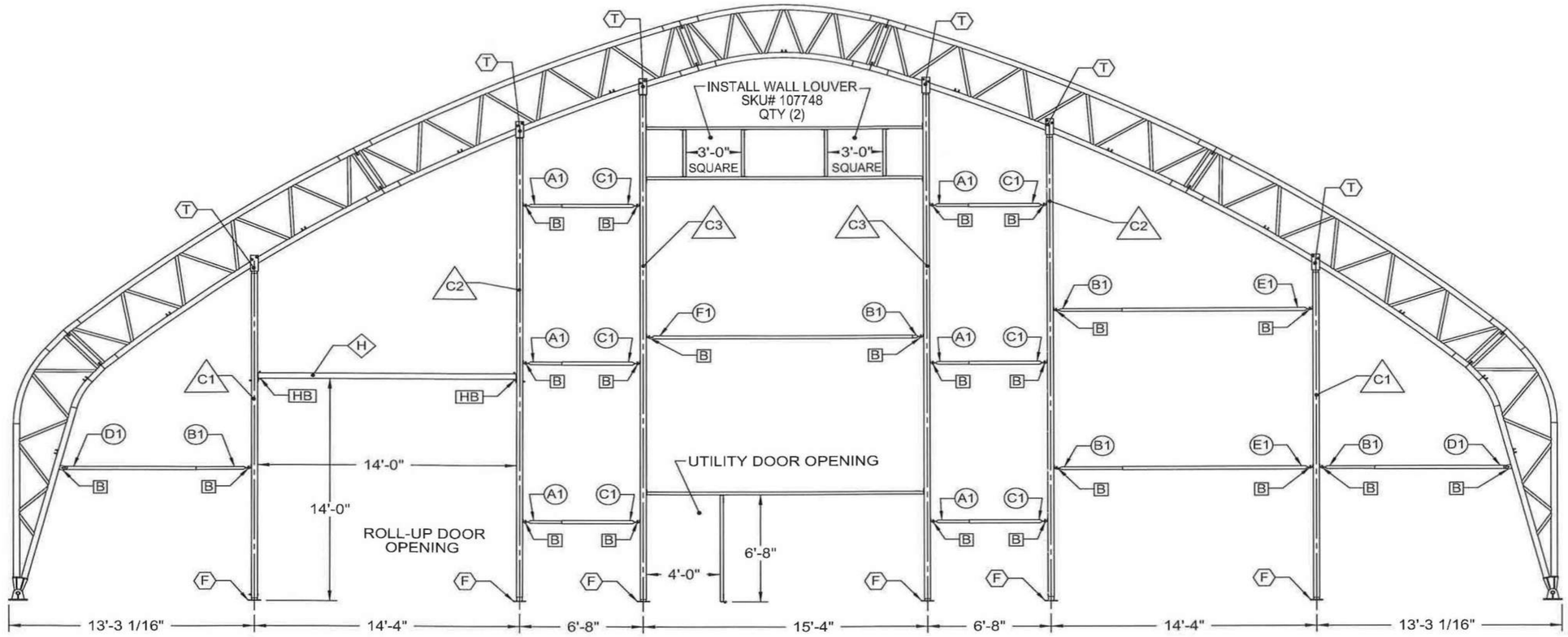

COLUMNS
- **C1 :** EWC2P246G08 (4" x 4" 2-PLY SQUARE TUBE)
- **C2 :** EWC2P348G08 (4" x 4" 2-PLY SQUARE TUBE)
- **C3 :** EWC2P382G08 (4" x 4" 2-PLY SQUARE TUBE)

HEADER
- **H :** EWH2P16725G08 (4" x 4" 2-PLY SQUARE TUBE)

TELESCOPING PURLINS
- **A1 :** 200TP050 (2.000" OD ROUND PIPE - 9 GAUGE)
- **B1 :** 200TP108 (2.000" OD ROUND PIPE - 9 GAUGE)
- **C1 :** 2375TP050 (2.375" OD ROUND PIPE - 14 GAUGE)
- **D1 :** 2375TP085 (2.375" OD ROUND PIPE - 14 GAUGE)
- **E1 :** 2375TP120 (2.375" OD ROUND PIPE - 14 GAUGE)
- **F1 :** 2375TP172 (2.375" OD ROUND PIPE - 14 GAUGE)

INSERTS
- **F :** 106762 (BOTTOM COLUMN INSERT)
- **T :** 106757 (TOP COLUMN INSERT)

BRACKETS
- **B :** 106755 (PURLIN BRACKET)
- **HB :** EWHB2P (2 PLY HEADER BRACKET)

4/9/10

NOTES:

- ALL DIMENSIONS ARE FROM CENTER TO CENTER UNLESS OTHERWISE NOTED.
- TELESCOPING PURLIN LOCATIONS ARE ADJUSTABLE AND FIELD DETERMINED. GENERIC LAYOUT IS SHOWN.
- MAN DOOR IS RIGHT SPECIFIED. ITS USE AND ROUGH SIZE IS DETERMINED ON SITE. TUBING IS 2"X3" RECT. (R23P*) W/ 107923 INSERTS & QH1330 BRACKETS.

Developed By
A Division of Engineering Services & Products Co.
1440 18th Ave. SW
Dyersville, IA 52040
P: 563.875.6113
F: 563.875.2317
www.esapco.com/

Order Number: 4323239
Customer Number: 5970824

Naeem Akhter, PE, SE
Consulting Structural Engineer
7834 W 156th Street
Overland Park, KS 66223
(913) 685-2015 Off
(913) 685-2019 Fax

Structure SKU #: EW083HKS0151WF
Structure Size: 83' W x 80' L x 37'-8" H
Structure Description: HERCULES TRUSS ARCH END WALL
Customer Information: ENVIR HEALTH & SAFETY SERVICE, B002 DLV PT BC 29-5, SUFFIELD, CT 06078-0129
Customer Contact Phone: 860-668-0736
Customer Contact: ART BOEHM
Page Title: PART LOCATIONS & LAYOUT

PDMWorks Project: 4323239 ENVIR HEALTH & SAFETY

Drawings	
Drawn By: WJM	Creation Date: 3/22/2010

Revisions:

No.	By:	Revision Date:
1	---	---
2	---	---
3	---	---

Sheet: **CC1-1.0**

NEW SHEET ADDED BY ADDENDUM NO. 2

FOR INFORMATION ONLY

REV.	DATE	REVISION DESCRIPTION
-	-	-
-	-	-
-	-	-
-	-	-
-	-	-
-	-	-
-	-	-

THE INFORMATION, INCLUDING ESTIMATED QUANTITIES OF WORK, SHOWN ON THESE SHEETS IS BASED ON LIMITED INVESTIGATIONS BY THE STATE AND IS IN NO WAY WARRANTED TO INDICATE THE CONDITIONS OF ACTUAL QUANTITIES OF WORK WHICH WILL BE REQUIRED.

NOT TO SCALE

STATE OF CONNECTICUT
DEPARTMENT OF TRANSPORTATION

SIGNATURE/ BLOCK:

PROJECT TITLE: **NEW HAVEN RAIL YARD FACILITIES IMPROVEMENTS WEST END YARD**

TOWN: **NEW HAVEN**

DRAWING TITLE: **FOR INFORMATION ONLY**

PROJECT NO. 0300-0138
DRAWING NO. FIO-23
SHEET NO. 20.23.A2

CONNECTION DETAILS

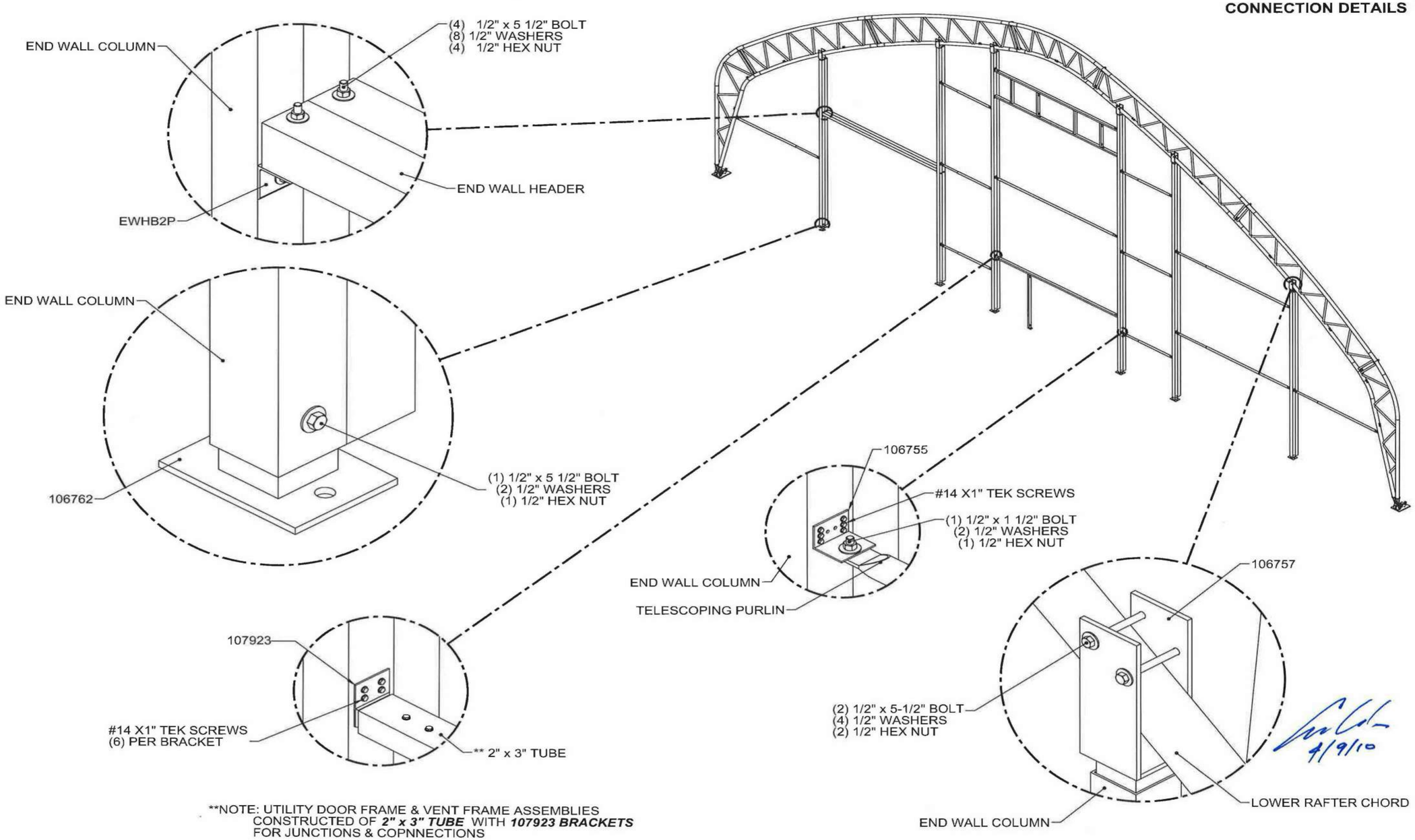

NOTE: UTILITY DOOR FRAME & VENT FRAME ASSEMBLIES CONSTRUCTED OF ***2" x 3" TUBE* WITH ***107923 BRACKETS*** FOR JUNCTIONS & COPNNECTIONS

Developed By
A Division of Engineering Services & Products Co.
1440 18th Ave SW
Dyersville, IA 52040
P: 563.875.0113
F: 563.875.2317
www.esapco.com

Order Number: 4323239
Customer Number: 5970824

Naeem Akhter, PE, SE
Consulting Structural Engineer
7834 W 156th Street
Overland Park, KS 66223
(913) 685-2015 Off
(913) 685-2019 Fax

Customer Information:
ENVIR HEALTH & SAFETY SERVICE
B002 DLV PT BC 29-6
SUFFIELD, CT 06078-0129

Customer Contact: ART BOEHM
Customer Contact Phone: 860-668-0736

Structure SKU #: EW083HKS0151WF
Structure Size: 83' W x 80' L x 37'-8" H
Structure Description: HERCULES TRUSS ARCH END WALL

Page Title: CONNECTION DETAILS

PDMWorks Project: 4323239 ENVIR HEALTH & SAFETY

Drawings

Drawn By:	Creation Date:
WJM	3/22/2010

Revisions:

No.	By:	Revision Date:
1	---	---
2	---	---
3	---	---

Sheet: **DD1-1.0**

NEW SHEET ADDED BY ADDENDUM NO. 2

FOR INFORMATION ONLY

REV.	DATE	REVISION DESCRIPTION
-	-	-
-	-	-
-	-	-
-	-	-
-	-	-
-	-	-
-	-	-

THE INFORMATION, INCLUDING ESTIMATED QUANTITIES OF WORK, SHOWN ON THESE SHEETS IS BASED ON LIMITED INVESTIGATIONS BY THE STATE AND IS IN NO WAY WARRANTED TO INDICATE THE CONDITIONS OF ACTUAL QUANTITIES OF WORK WHICH WILL BE REQUIRED.

NOT TO SCALE

STATE OF CONNECTICUT
DEPARTMENT OF TRANSPORTATION

SIGNATURE/ BLOCK:

PROJECT TITLE: **NEW HAVEN RAIL YARD FACILITIES IMPROVEMENTS WEST END YARD**

TOWN: **NEW HAVEN**

DRAWING TITLE: **FOR INFORMATION ONLY**

PROJECT NO. **0300-0138**
DRAWING NO. **FIO-24**
SHEET NO. **20.24.A2**

ANCHOR HOLE LAYOUT

ENDWALL COLUMN REACTIONS FOR FOUNDATION:

MAXIMUM GRAVITY = 950 LBS.
MAXIMUM UPLIFT = 750 LBS.
MAXIMUM HORIZONTAL = 3000 LBS.

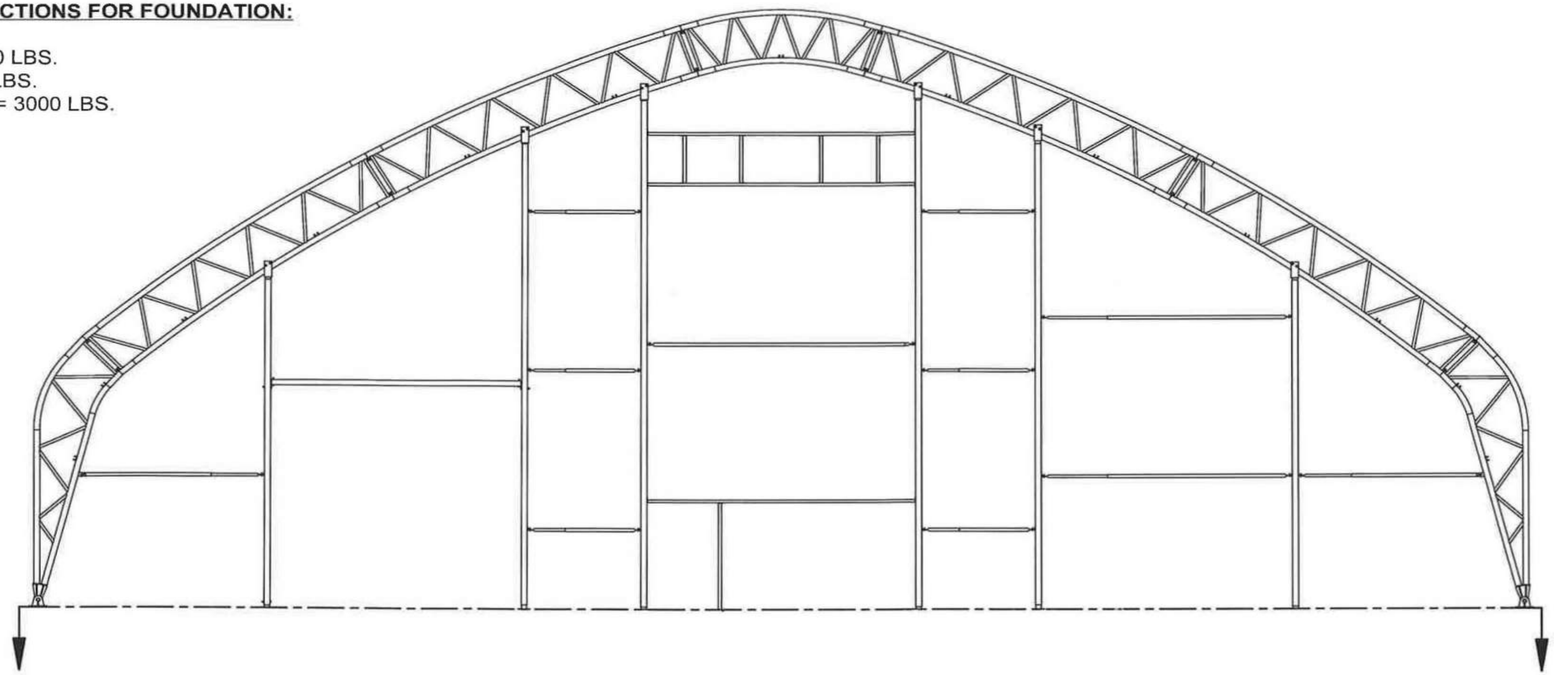

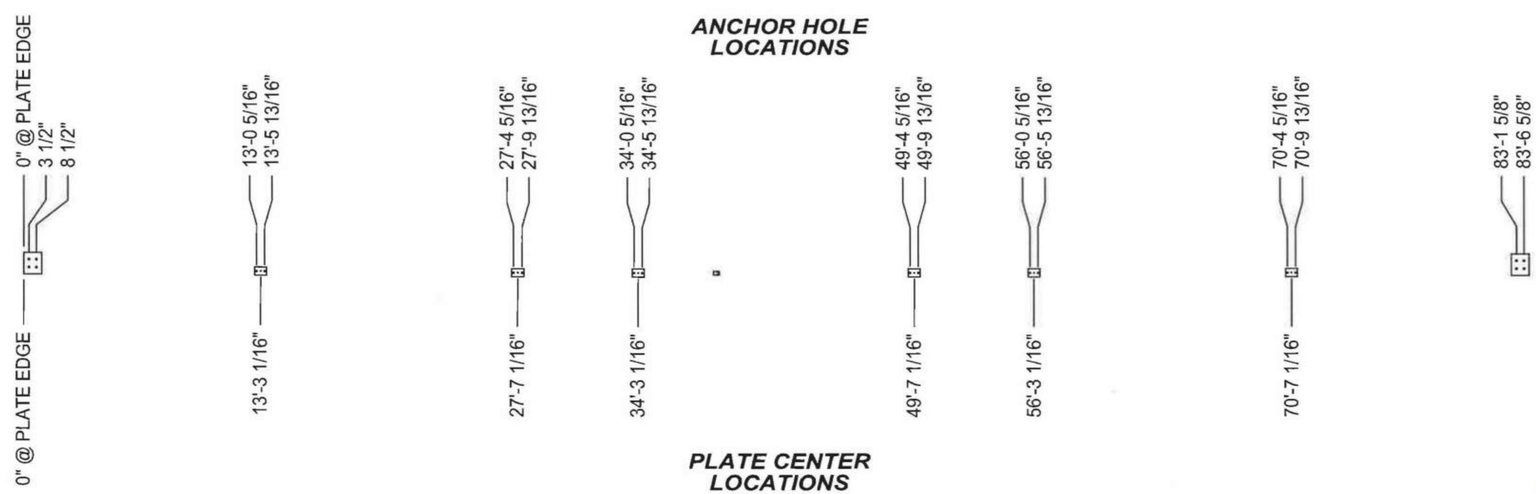

4/9/10

Developed By
A Division of Engineering Services & Products Co.
1440 18th Ave. SW
Dyersville, IA 52040
P 563.875.6113
F 563.875.2317
www.aspco.com/

Order Number: 4323239
Customer Number: 5970824

Naeem Akhter, PE, SE
Consulting Structural Engineer
7834 W 156th Street
Overland Park, KS 66223
(913) 685-2015 Off
(913) 685-2019 Fax

Structure SKU #: EW083HKS0151WF
Structure Size: 83' W x 80' L x 37'-8" H
Structure Description: HERCULES TRUSS ARCH END WALL

Customer Information: ENVIR HEALTH & SAFETY SERVICE, 1 BIRCH HILL RD, SUFFIELD, CT 06078-0129
Customer Contact: ART BOEHM
Customer Contact Phone: 860-668-0736
Page Title: ANCHOR HOLE LAYOUT

PDMWorks Project:	
4323239 ENVIR HEALTH & SAFETY	
Drawings	
Drawn By: WJM	Creation Date: 3/22/2010
Revisions:	

No.	By:	Revision Date:
1	---	---
2	---	---
3	---	---

Sheet: **EE1-1.0**

NEW SHEET ADDED BY ADDENDUM NO. 2

FOR INFORMATION ONLY

REV.	DATE	REVISION DESCRIPTION
-	-	-
-	-	-
-	-	-
-	-	-
-	-	-
-	-	-
-	-	-

THE INFORMATION, INCLUDING ESTIMATED QUANTITIES OF WORK, SHOWN ON THESE SHEETS IS BASED ON LIMITED INVESTIGATIONS BY THE STATE AND IS IN NO WAY WARRANTED TO INDICATE THE CONDITIONS OF ACTUAL QUANTITIES OF WORK WHICH WILL BE REQUIRED.

NOT TO SCALE

STATE OF CONNECTICUT
DEPARTMENT OF TRANSPORTATION

SIGNATURE/ BLOCK:

PROJECT TITLE: **NEW HAVEN RAIL YARD FACILITIES IMPROVEMENTS WEST END YARD**

TOWN: **NEW HAVEN**

DRAWING TITLE: **FOR INFORMATION ONLY**

PROJECT NO. **0300-0138**
DRAWING NO. **FIO-25**
SHEET NO. **20.25.A2**

EW083HKS0161DWF

83' HK END WALL 14' x14' DOOR; 48" x 80" UTILITY DOOR
& TWO 48" SQUARE VTEK FANS

NOTE:

ALL DOORS MUST BE CLOSED AND SECURED DURING HIGH WIND EVENTS (WIND SPEEDS > 70 MPH)

Content Guide:

AAA1-1.0.....COVER PAGE
BBB1-1.0.....MATERIAL SPECIFICATIONS
CCC1-1.0.....PART LOCATIONS & LAYOUT
DDD1-1.0.....CONNECTION DETAILS
EEE1-1.0.....ANCHOR HOLE LAYOUT

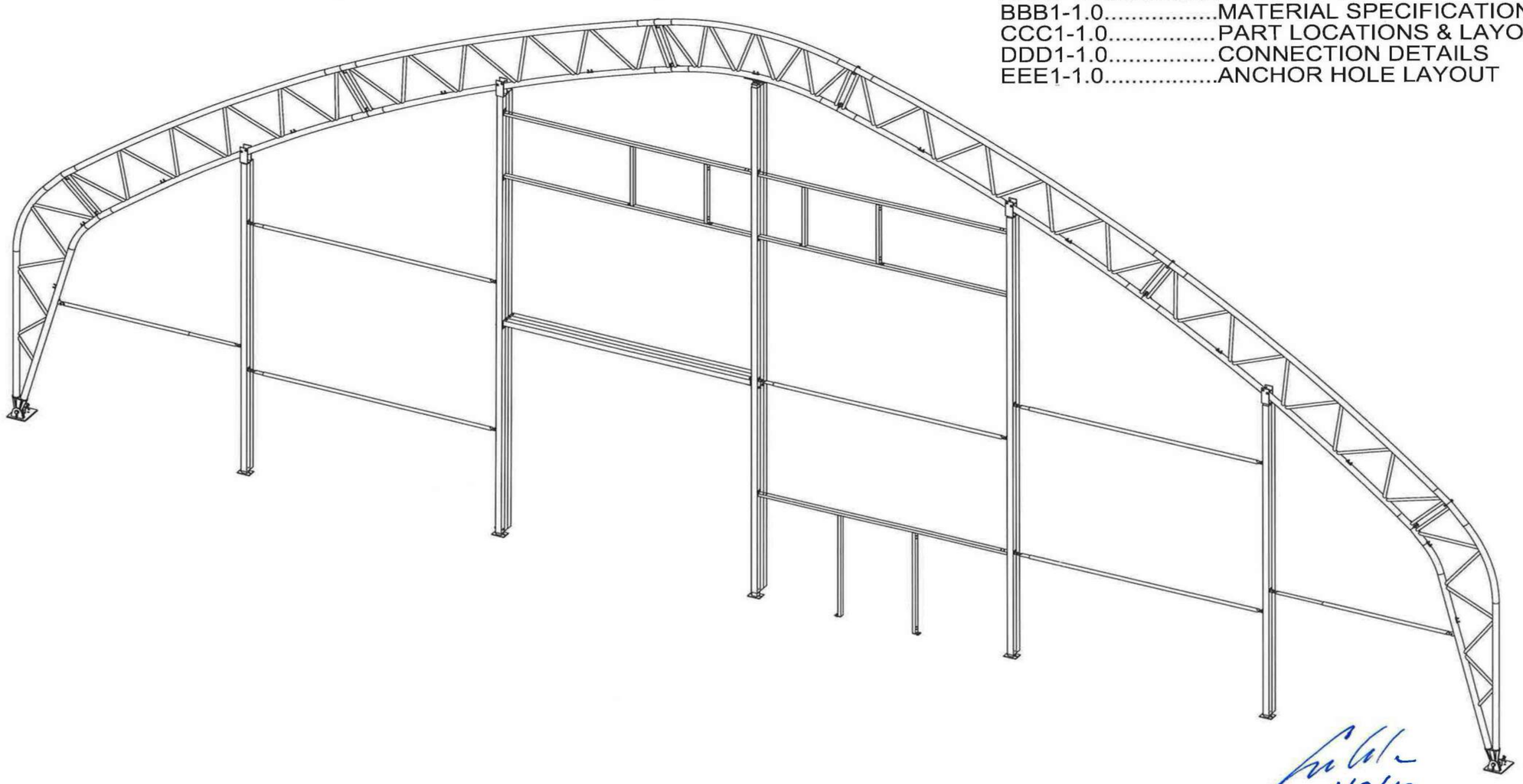

4/9/10

Developed By
A Division of Engineering Services & Products Co.
1440 18th Ave. SW
Dyersville, IA 52040
P 563.875.6113
F 563.875.2317
www.esapco.com/

Order Number: 4323239
Customer Number: 5970824

Naeem Akhter, PE, SE
Consulting Structural Engineer
7834 W 156th Street
Overland Park, KS 66223
(913) 685-2015 Off
(913) 685-2019 Fax

Customer Information:
ENVIR HEALTH & SAFETY SERVICE
8002 DLV PT BC 29-5
SUFFIELD, CT 06078-0129

Customer Contact: ART BOEHM
Customer Contact Phone: 860-668-0736
Page Title: COVER PAGE
Structure SKU #: EW083HKS0161WF
Structure Size: 83' W x 80' L x 37'-8" H
Structure Description: HERCULES TRUSS ARCH END WALL

PDMWorks Project:
4323239 ENVIR HEALTH & SAFETY

Drawings	
Drawn By:	Creation Date:
WJM	3/22/2010

Revisions:

No.	By:	Revision Date:
1	---	---
2	---	---
3	---	---

Sheet: **AAA1-1.0**

NEW SHEET ADDED BY ADDENDUM NO. 2

FOR INFORMATION ONLY

REV.	DATE	REVISION DESCRIPTION
-	-	-
-	-	-
-	-	-
-	-	-
-	-	-
-	-	-
-	-	-

THE INFORMATION, INCLUDING ESTIMATED QUANTITIES OF WORK, SHOWN ON THESE SHEETS IS BASED ON LIMITED INVESTIGATIONS BY THE STATE AND IS IN NO WAY WARRANTED TO INDICATE THE CONDITIONS OF ACTUAL QUANTITIES OF WORK WHICH WILL BE REQUIRED.

NOT TO SCALE

STATE OF CONNECTICUT
DEPARTMENT OF TRANSPORTATION

SIGNATURE/ BLOCK:

PROJECT TITLE: **NEW HAVEN RAIL YARD FACILITIES IMPROVEMENTS WEST END YARD**

TOWN: **NEW HAVEN**

DRAWING TITLE: **FOR INFORMATION ONLY**

PROJECT NO. **0300-0138**
DRAWING NO. **FIO-26**
SHEET NO. **20.26.A2**

PART LOCATIONS & LAYOUT

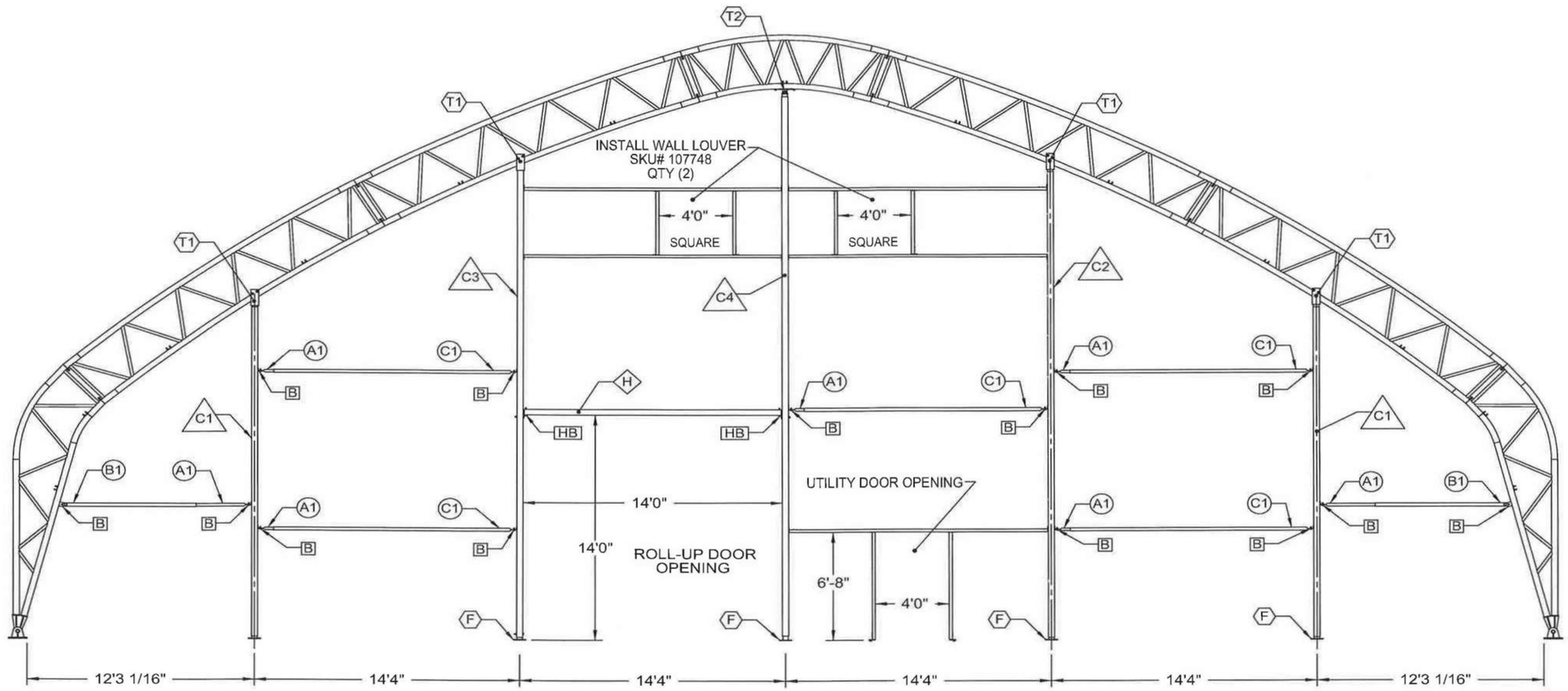

COLUMNS

C1 : EWC2P246G08 (4" x 4" 2-PLY SQUARE TUBE)
C2 : EWC2P348G08 (4" x 4" 2-PLY SQUARE TUBE)
C3 : EWC3P348G08 (4" x 4" 3-PLY SQUARE TUBE)
C4 : EWC3P403G08 (4" x 4" 3-PLY SQUARE TUBE)

TELESCOPING PURLINS

A1 : 200TP108 (2.000" OD ROUND PIPE - 9 GAUGE)
B1 : 2375TP085 (2.375" OD ROUND PIPE - 14 GAUGE)
C1 : 2375TP157 (2.375" OD ROUND PIPE - 14 GAUGE)

BRACKETS

B : 106755 (PURLIN BRACKET)
HB : EWHB3P (3 PLY HEADER BRACKET)

HEADER

H : EWH3P16675G08 (4" x 4" 3-PLY SQUARE TUBE)

INSERTS

F : 106762 (BOTTOM COLUMN INSERT)
T1 : 106757 (TOP COLUMN INSERT)
T2 : 108151 (TOP COLUMN PIVOT INSERT)

4/9/10

NOTES:

- ALL DIMENSIONS ARE FROM CENTER TO CENTER UNLESS OTHERWISE NOTED.
- TELESCOPING PURLIN LOCATIONS ARE ADJUSTABLE AND FIELD DETERMINED. GENERIC LAYOUT IS SHOWN.
- MAN DOOR IS RIGHT SPECIFIED. ITS USE AND ROUGH SIZE IS DETERMINED ON SITE. TUBING IS 2"X3" RECT. (R23P*) W/ 107923 INSERTS & QH1330 BRACKETS.

Developed By
A Division of Engineering Services & Products Co.
1440 18th Ave. SW
Cedar Rapids, IA 52240
P 563.875.6113
F 563.875.2317
www.esapco.com/

Order Number: 4323239
Customer Number: 5970824

Naeem Akhter, PE, SE
Consulting Structural Engineer
7834 W 156th Street
Overland Park, KS 66223
(913) 685-2015 Off
(913) 685-2019 Fax

Structure SKU #: EW083HKS0161WF
Structure Size: 83' W x 80' L x 37'-8" H
Structure Description: HERCULES TRUSS ARCH END WALL

Customer Information: ENVIR HEALTH & SAFETY SERVICE, R002 DLV PT BC 29-8, SUFFIELD, CT 06078-0129
Customer Contact: ART BOEHM
Customer Contact Phone: 860-668-0736
Page Title: PART LOCATIONS & LAYOUT

PDMWorks Project: 4323239 ENVIR HEALTH & SAFETY
Drawings
Drawn By: WJM
Creation Date: 3/22/2010
Revisions:

No.	By:	Revision Date:
1	---	---
2	---	---
3	---	---

Sheet: **CCC1-1.0**

NEW SHEET ADDED BY ADDENDUM NO. 2

FOR INFORMATION ONLY

REV.	DATE	REVISION DESCRIPTION
-	-	-
-	-	-
-	-	-
-	-	-
-	-	-
-	-	-
-	-	-

THE INFORMATION, INCLUDING ESTIMATED QUANTITIES OF WORK, SHOWN ON THESE SHEETS IS BASED ON LIMITED INVESTIGATIONS BY THE STATE AND IS IN NO WAY WARRANTED TO INDICATE THE CONDITIONS OF ACTUAL QUANTITIES OF WORK WHICH WILL BE REQUIRED.

NOT TO SCALE

STATE OF CONNECTICUT
DEPARTMENT OF TRANSPORTATION

SIGNATURE/ BLOCK:

PROJECT TITLE: **NEW HAVEN RAIL YARD FACILITIES IMPROVEMENTS WEST END YARD**

TOWN: **NEW HAVEN**

DRAWING TITLE: **FOR INFORMATION ONLY**

PROJECT NO. **0300-0138**
DRAWING NO. **FIO-27**
SHEET NO. **20.27.A2**

CONNECTION DETAILS

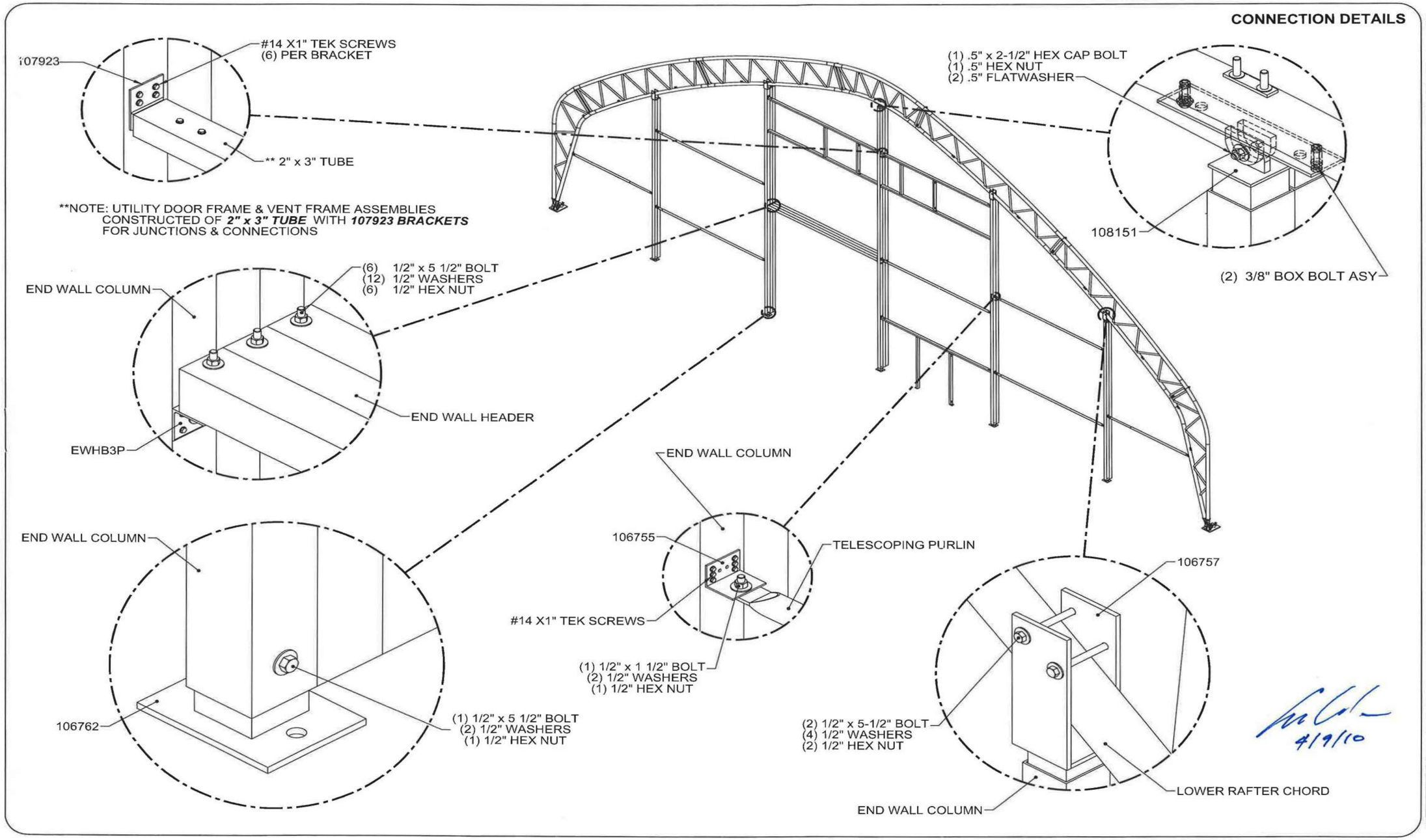

4/9/10

Developed By
A Division of Engineering Services & Products Co.
1440 18th Ave. SW
Cyrsville, IA 52040
P: 563.875.8113
F: 563.875.2317
www.esapco.com/

Order Number: 4323239
Customer Number: 5970824

Naeem Akhter, PE, SE
Consulting Structural Engineer
7834 W 156th Street
Overland Park, KS 66223
(913) 685-2015 Off
(913) 685-2019 Fax

Customer Information: ENVIR HEALTH & SAFETY SERVICE, B002 DLV PT BC 29-8, SUFFIELD, CT 06078-0129	Structure SKU #: EW083HKS0161WF
Customer Contact: ART BOEHM	Customer Contact Phone: 860-668-0736
Page Title: CONNECTION DETAILS	Structure Size: 83' W x 80' L x 37'-8" H
	Structure Description: HERCULES TRUSS ARCH END WALL

PDMWorks Project: 4323239 ENVIR HEALTH & SAFETY	
Drawings	
Drawn By: WJM	Creation Date: 3/22/2010
Revisions:	
No / By: / Revision Date:	
1	
2	
3	

Sheet: **DDD1-1.0**

NEW SHEET ADDED BY ADDENDUM NO. 2

FOR INFORMATION ONLY

REV.	DATE	REVISION DESCRIPTION
-	-	-
-	-	-
-	-	-
-	-	-
-	-	-
-	-	-
-	-	-

THE INFORMATION, INCLUDING ESTIMATED QUANTITIES OF WORK, SHOWN ON THESE SHEETS IS BASED ON LIMITED INVESTIGATIONS BY THE STATE AND IS IN NO WAY WARRANTED TO INDICATE THE CONDITIONS OF ACTUAL QUANTITIES OF WORK WHICH WILL BE REQUIRED.

NOT TO SCALE

STATE OF CONNECTICUT
DEPARTMENT OF TRANSPORTATION

SIGNATURE/ BLOCK:

PROJECT TITLE: **NEW HAVEN RAIL YARD FACILITIES IMPROVEMENTS WEST END YARD**

TOWN: **NEW HAVEN**

DRAWING TITLE: **FOR INFORMATION ONLY**

PROJECT NO. **0300-0138**

DRAWING NO. **FIO-28**

SHEET NO. **20.28.A2**

MATERIAL SPECIFICATIONS

MARK	DESCRIPTION	MATERIAL
COLUMNS		
C1	EWC2P246G08	4" x 8GA 2-PLY SQUARE TUBE GALV - 246" LONG
C2	EWC2P348G08	4" x 8GA 2-PLY SQUARE TUBE GALV - 348" LONG
C3	EWC3P348G08	4" x 8GA 3-PLY SQUARE TUBE GALV - 348" LONG
C4	EWC3P403G08	4" x 8GA 3-PLY SQUARE TUBE GALV - 403" LONG
HEADER		
H	EWH3P16675G08	4" x 8GA 3-PLY SQUARE TUBE GALV - 166.75" LONG
TELESCOPING PURLINS		
A1	200TP108	2.00" Ø TUBE 9GA GALV - 108" LONG
B1	2375TP085	2.375" Ø TUBE 14GA GALV - 85" LONG
C1	2375TP157	2.375" Ø TUBE 14GA GALV - 157" LONG
INSERTS		
F	106762	3.5" x 16" 8GA SQUARE TUBE/ 3/8" STEEL PLATE
T1	106757	3.5" x 16" 14GA SQUARE TUBE/ 3/8" STEEL PLATE
T2	108151	3.5" x 16" 14GA SQUARE TUBE/1/4" THK PLATE - 1/2" THK PIVOT BRACKETS
BRACKETS		
B	106755	1/8" STEEL PLATE
HB	EWHB3P	3/16" STEEL PLATE

PLEASE REFER TO PAGE [CCC1-1.0] FOR PART LOCATIONS.

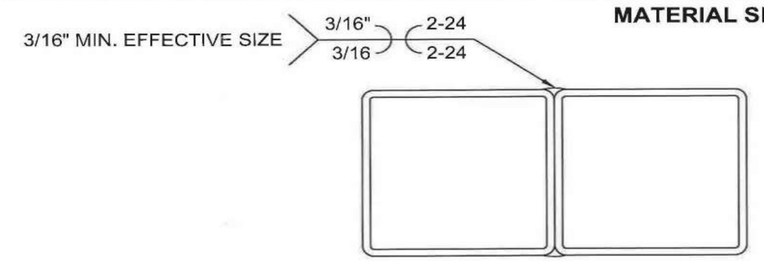

2-PLY PIPE WELD DETAIL

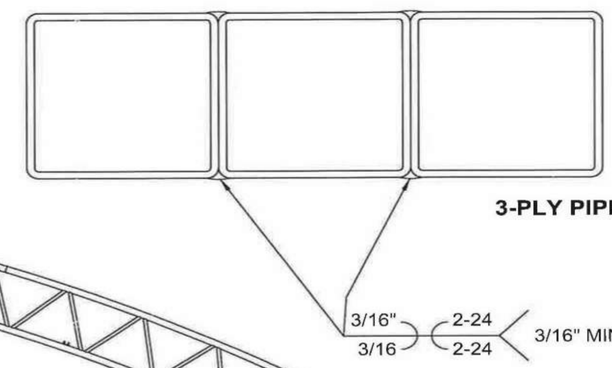

3-PLY PIPE WELD DETAIL

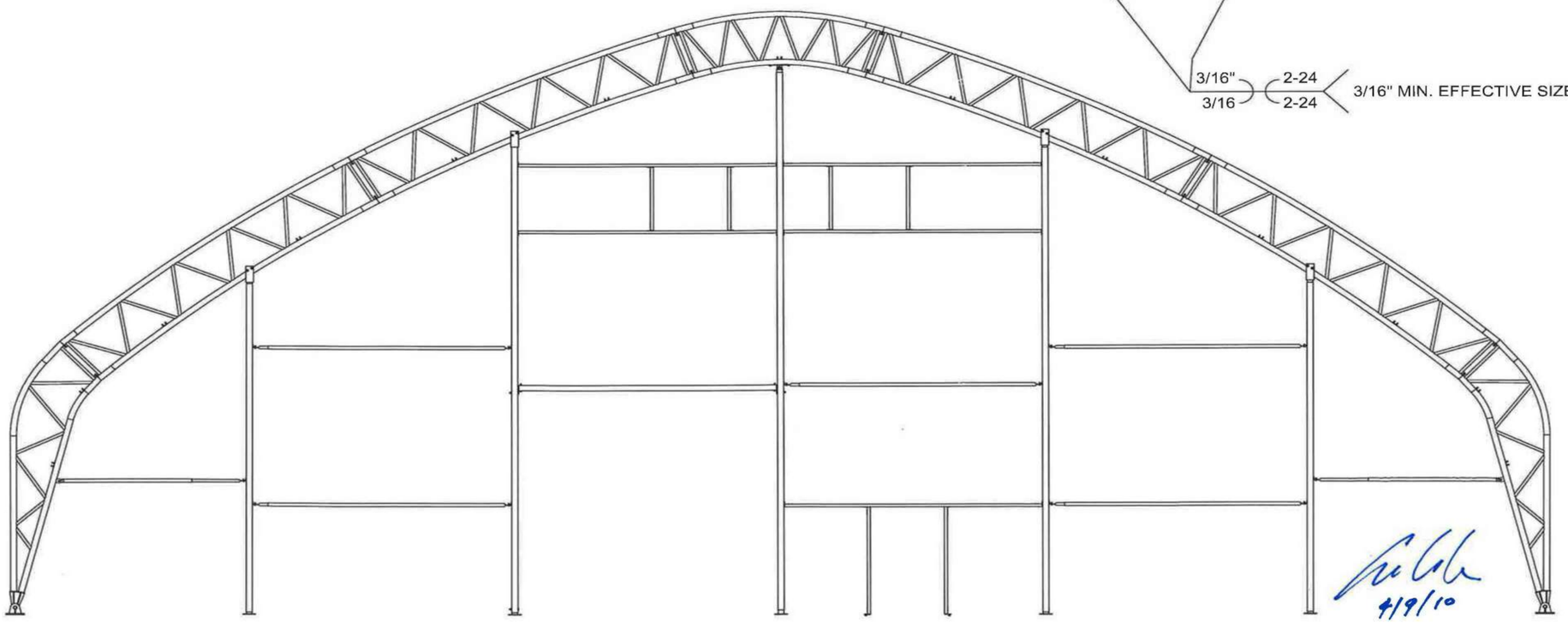

4/9/10

Developed By:
A Division of Engineering Services & Products Co.
1440 18th Ave. SW
Overpelle, IA 52040
P 563.875.8113
F 563.875.2317
www.esapco.com/

Order Number: 4323239

Customer Number: 5970824

Naeem Akhter, PE, SE
Consulting Structural Engineer
7834 W 156th Street
Overland Park, KS 66223
(913) 685-2015 Off
(913) 685-2019 Fax

Customer Information:
ENVIR HEALTH & SAFETY SERVICE
BUCKLAND TOWER 4
SUFFIELD, CT 06078-0129

Customer Contact: ART BOEHM

Customer Contact Phone: 860-668-0736

Page Title: MATERIAL SPECIFICATIONS

Structure SKU #: EW083HKS0161WF

Structure Size: 83' W x 80' L x 37'-8" H

Structure Description: HERCULES TRUSS ARCH END WALL

PDMWorks Project: 4323239 ENVIR HEALTH & SAFETY

Drawings

Drawn By:	Creation Date:
WJM	3/22/2010

Revisions:

No.	By:	Revision Date:
1	---	---
2	---	---
3	---	---

Sheet: **BBB1-1.0**

NEW SHEET ADDED BY ADDENDUM NO. 2

FOR INFORMATION ONLY

REV.	DATE	REVISION DESCRIPTION
-	-	-
-	-	-
-	-	-
-	-	-
-	-	-
-	-	-
-	-	-

THE INFORMATION, INCLUDING ESTIMATED QUANTITIES OF WORK, SHOWN ON THESE SHEETS IS BASED ON LIMITED INVESTIGATIONS BY THE STATE AND IS IN NO WAY WARRANTED TO INDICATE THE CONDITIONS OF ACTUAL QUANTITIES OF WORK WHICH WILL BE REQUIRED.

NOT TO SCALE

STATE OF CONNECTICUT
DEPARTMENT OF TRANSPORTATION

SIGNATURE/ BLOCK:

PROJECT TITLE: **NEW HAVEN RAIL YARD FACILITIES IMPROVEMENTS WEST END YARD**

TOWN: **NEW HAVEN**

DRAWING TITLE: **FOR INFORMATION ONLY**

PROJECT NO. **0300-0138**

DRAWING NO. **FIO-29**

SHEET NO. **20.29.A2**

CONCRETE:

CONCRETE SHALL BE 3,000 PSI MINIMUM COMPRESSIVE STRENGTH AT 28 DAYS.

EXCAVATION:

OPEN EXCAVATIONS MUST BE INSPECTED BY THE ENGINEER BEFORE PLACEMENT OF CONCRETE.

ANCHOR BOLTS:

THE DIAMETER OF THE BOLTS SHALL BE 1/16" LESS THAN THE BOLT HOLES PROVIDED IN THE BASE PLATES. THE EMBEDMENT OF EACH ANCHOR BOLT SHALL BE SUFFCIENT TO RESIST A MINIMUM VALUE OF 6,000 LBS PULL-OUT TENSION FORCE. (4 ANCHOR BOLTS ARE REQUIRED PER BASE PLATE). THE INSTALLATION OF EXPOXY ANCHOR BOLTS MUST BE INSTALLED IN STRICT CONFORMANCE WITH THE MANUFACTURER'S SPECIFICATIONS AND SHALL BE CAREFULLY MONITORED BY AN INDEPENDENT TESTING LAB TO ENSURE PROPER INSTALLATION IN ACCORDANCE WITH WITH MANUFACTURER'S RECOMMENDATIONS.

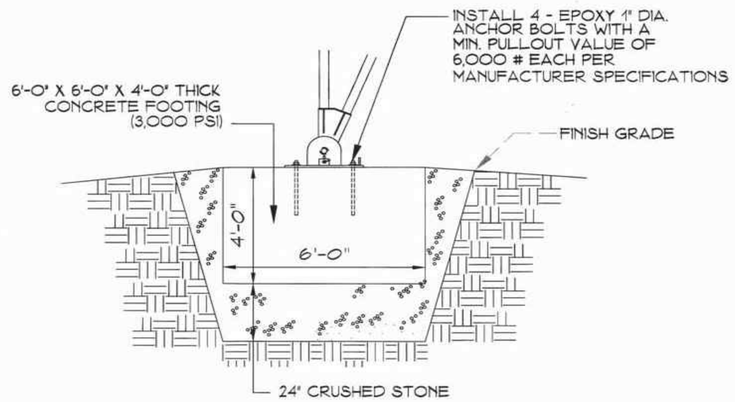

1 / F1 FOOTING DETAIL (14 LOCATIONS)

NOT TO SCALE

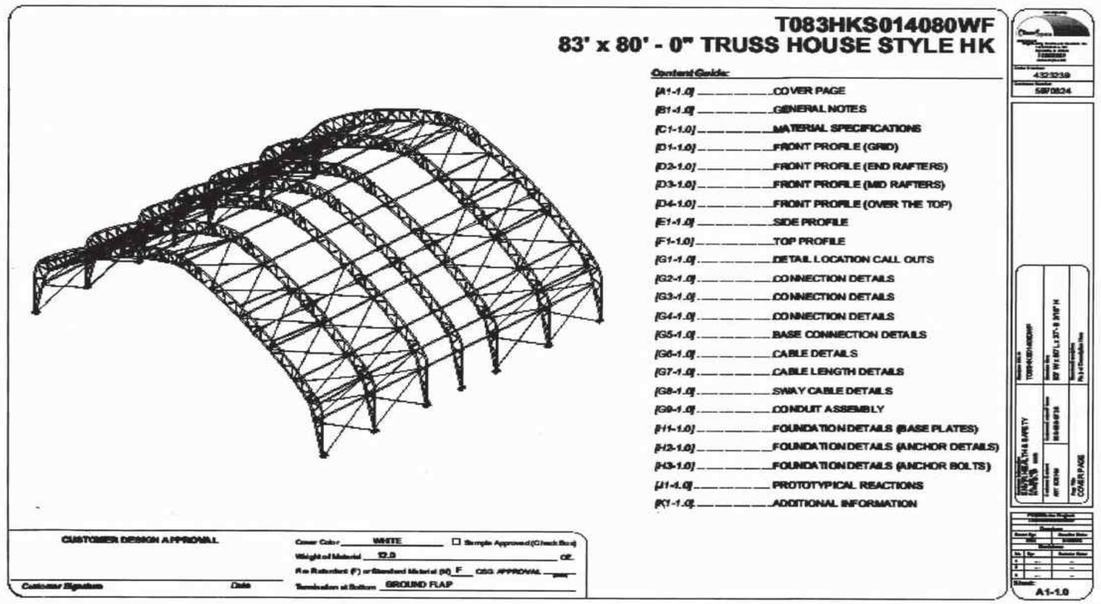

REV.	DATE:	DESCRIPTION:
–	–	–

JOSEPH L. CALABRESE, P.C.
Consulting Engineers
51 Lakeside Boulevard East · Waterbury, CT 06708
(203) 753–1635

WATER TREATMENT BUILDING

NEW HAVEN RAIL YARD
New Haven, Connecticut

SPACE FRAME RENDERING
FOOTING DETAIL / NOTES

DATE: March 31, 2010

DWG. NO. F 1

NEW SHEET ADDED BY ADDENDUM NO. 2

FOR INFORMATION ONLY

REV.	DATE	REVISION DESCRIPTION
-	-	-
-	-	-
-	-	-
-	-	-
-	-	-
-	-	-
-	-	-

THE INFORMATION, INCLUDING ESTIMATED QUANTITIES OF WORK, SHOWN ON THESE SHEETS IS BASED ON LIMITED INVESTIGATIONS BY THE STATE AND IS IN NO WAY WARRANTED TO INDICATE THE CONDITIONS OF ACTUAL QUANTITIES OF WORK WHICH WILL BE REQUIRED.

NOT TO SCALE

STATE OF CONNECTICUT
DEPARTMENT OF TRANSPORTATION

SIGNATURE/ BLOCK:

PROJECT TITLE: **NEW HAVEN RAIL YARD FACILITIES IMPROVEMENTS WEST END YARD**

TOWN: **NEW HAVEN**

DRAWING TITLE: **FOR INFORMATION ONLY**

PROJECT NO. **0300-0138**

DRAWING NO. **FIO-30**

SHEET NO. **20.30.A2**