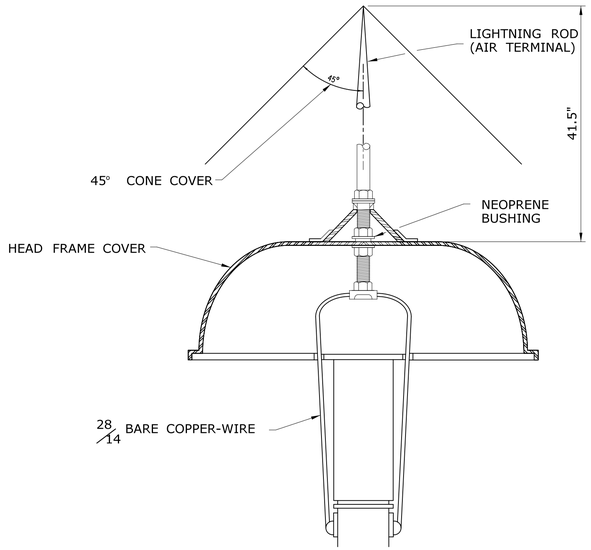

CENTER HOOD MOUNT LIGHTNING ROD TYPICAL DETAIL

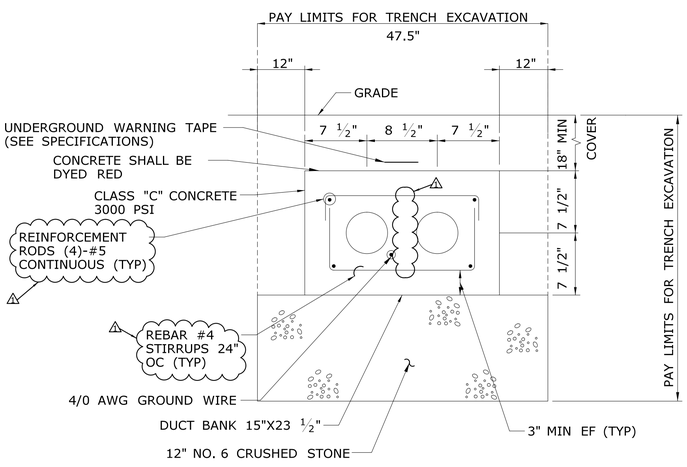

DUCT BANK NOTES:

1. PLACE COMPACTED GRANULAR FILL TO SEASONAL HIGH GROUND WATER ELEV 5.0. ABOVE ELEV 5.0, SUITABLE BACKFILL MATERIAL SHALL BE ANY SUITABLE MATERIAL EXCAVATED FROM THE RESPECTIVE TRENCH OR REUSABLE CONTROLLED MATERIAL FROM THE WASTE STOCKPILE AREA. COMPACTED GRANULAR FILL SHOULD BE USED IN THE ABSENCE OF SUITABLE BACKFILL MATERIAL AS DIRECTED BY THE ENGINEER.
2. REFER TO ILLUMINATION PLAN LAYOUT FOR CONDUIT SIZE.

2-WAY DUCT BANK SECTION DETAIL

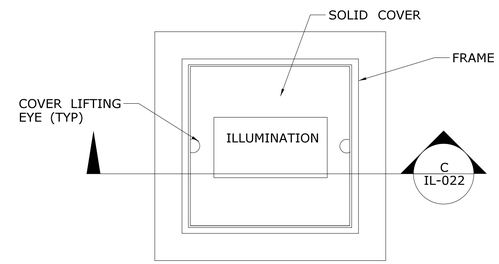

PLAN VIEW

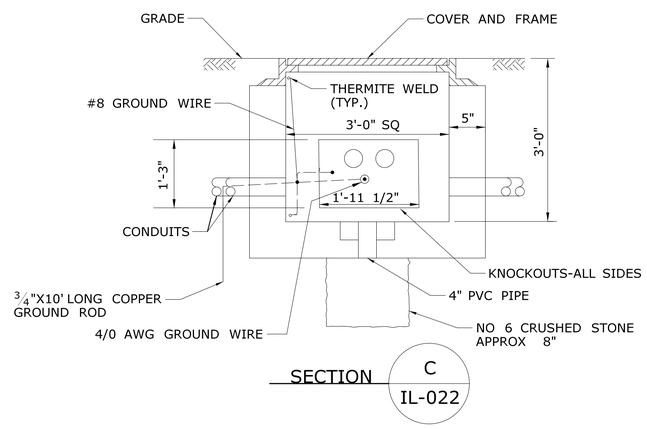

TYPICAL PRECAST ILLUMINATION HANDHOLE

NOTES:

1. PROVIDE CONTINUOUS COAT OF DAMP-PROOFING ON ALL SIDES OF HANDHOLES
2. PROVIDE WATERTIGHT SEAL AROUND THE GROUND RODS AND ALL CONDUIT PENETRATIONS.
3. PROVIDE 8" OF NO 6 CRUSHED STONE BELOW HANDHOLES.
4. ALL SPLICES MUST BE APPROVED FOR SUBMERSIBLE LOCATIONS.
5. ALL HANDHOLES SHALL BE DESIGNED BY A CT LICENSED ENGINEER FOR HS-20 LOADINGS.

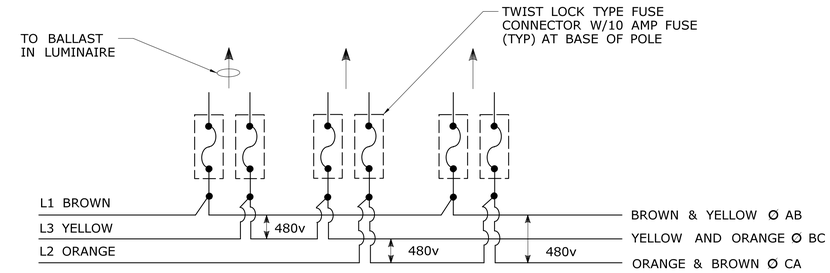

3 PHASE 3 WIRE SYSTEM DETAIL

DESIGNED BY:

VN ENGINEERS INC.
116 WASHINGTON AVENUE
NORTH HAVEN, CT 06473

Sofia Nirshberg
2019.03.13
08:50:26-04'00'

ADDENDUM NO. 2

REV.	DATE	REVISION DESCRIPTION	SHEET NO.
1	3/8/19	REVISED DUCT BANK REINFORCEMENT	12.23.A2

THE INFORMATION, INCLUDING ESTIMATED QUANTITIES OF WORK, SHOWN ON THESE SHEETS IS BASED ON LIMITED INVESTIGATIONS BY THE STATE AND IS IN NO WAY WARRANTED TO INDICATE THE CONDITIONS OF ACTUAL QUANTITIES OF WORK WHICH WILL BE REQUIRED.

Plotted Date: 3/12/2019

DESIGNER/DRAFTER: M. DION / A. MUKON
CHECKED BY: R. GOMEZ
NOT TO SCALE

STATE OF CONNECTICUT
DEPARTMENT OF TRANSPORTATION

Filename: ...\ILL-022_CNS_SHEET_0300-0138_A2.dgn

SIGNATURE/BLOCK:
VN ENGINEERS INC.
Traffic • Infrastructure • Planning
116 WASHINGTON AVENUE
NORTH HAVEN, CT 06473
203.234.7862

PROJECT TITLE:
NEW HAVEN RAIL YARD FACILITIES IMPROVEMENTS WEST END YARD

TOWN: **NEW HAVEN**

DRAWING TITLE: **SITE ILLUMINATION MISCELLANEOUS DETAILS-2**

PROJECT NO. **0300-0138**
DRAWING NO. **ILL-022**
SHEET NO. **12.23.A2**