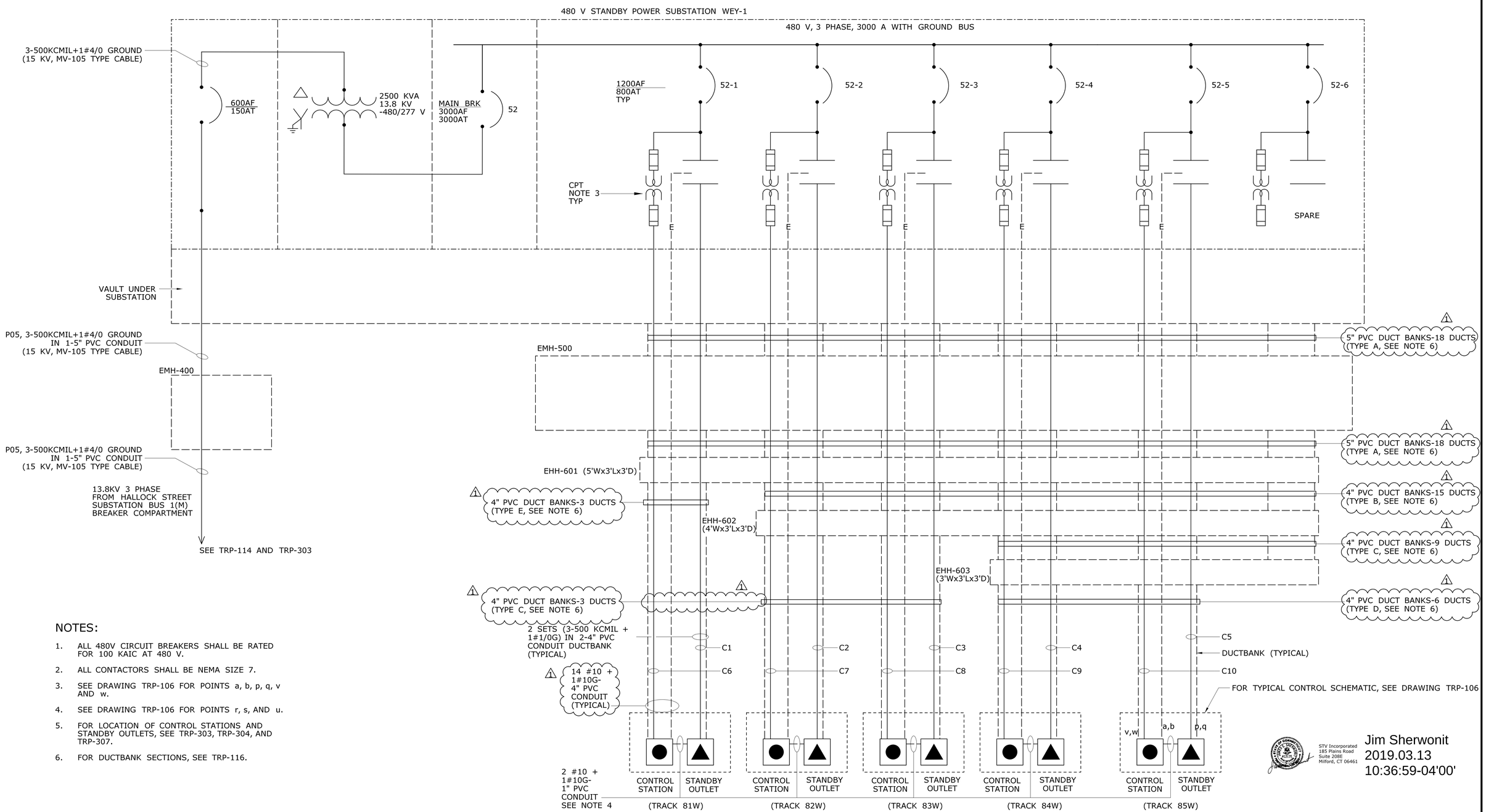

NOTES:

1. ALL 480V CIRCUIT BREAKERS SHALL BE RATED FOR 100 KAIC AT 480 V.
2. ALL CONTACTORS SHALL BE NEMA SIZE 7.
3. SEE DRAWING TRP-106 FOR POINTS a, b, p, q, v AND w.
4. SEE DRAWING TRP-106 FOR POINTS r, s, AND u.
5. FOR LOCATION OF CONTROL STATIONS AND STANDBY OUTLETS, SEE TRP-303, TRP-304, AND TRP-307.
6. FOR DUCTBANK SECTIONS, SEE TRP-116.

STV Incorporated
185 Plains Road
Suite 208E
Milford, CT 06461

Jim Sherwonit
2019.03.13
10:36:59-04'00'

ADDENDUM NO. 2

REV.	DATE	REVISION DESCRIPTION	SHEET NO.
1	03/08/2019	REVISED DUCT BANK SIZES AND QUANTITIES	15.013.A2

THE INFORMATION, INCLUDING ESTIMATED QUANTITIES OF WORK, SHOWN ON THESE SHEETS IS BASED ON LIMITED INVESTIGATIONS BY THE STATE AND IS IN NO WAY WARRANTED TO INDICATE THE CONDITIONS OF ACTUAL QUANTITIES OF WORK WHICH WILL BE REQUIRED.

Plotted Date: 3/13/2019

DESIGNER/DRAFTER: AA
CHECKED BY: EF
NOT TO SCALE

STATE OF CONNECTICUT
DEPARTMENT OF TRANSPORTATION

Filename: ...\TRP-105_A2_CNS_SHEET_0300-0138.dgn

SIGNATURE/BLOCK:
STV Incorporated
185 Plains Road
Suite 208E
Milford, CT 06461

PROJECT TITLE:
NEW HAVEN RAIL YARD FACILITIES IMPROVEMENTS WEST END YARD

TOWN: **NEW HAVEN**

DRAWING TITLE: **480V STANDBY POWER OUTLET SINGLE LINE DIAGRAM**

PROJECT NO. **300-0138**
DRAWING NO. **TRP-105**
SHEET NO. **15.013.A2**

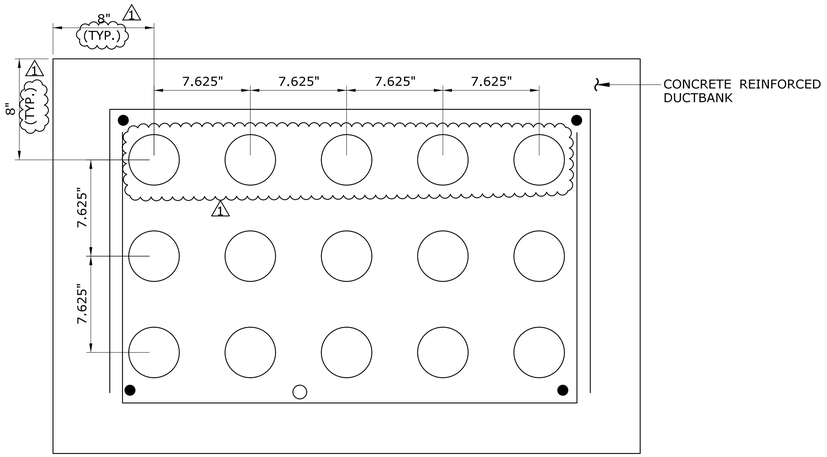

4" PVC DUCT BANKS - 15 DUCTS
(TYPE B, SEE NOTE 2)

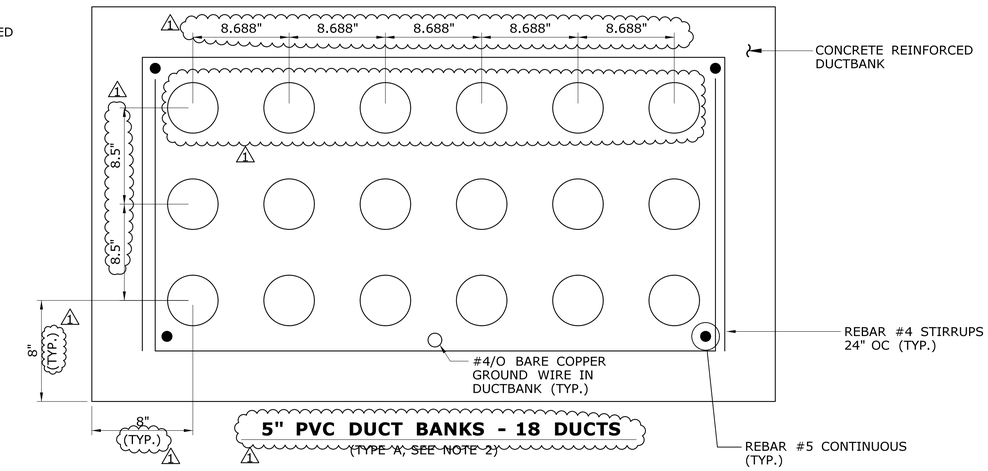

5" PVC DUCT BANKS - 18 DUCTS
(TYPE A, SEE NOTE 2)

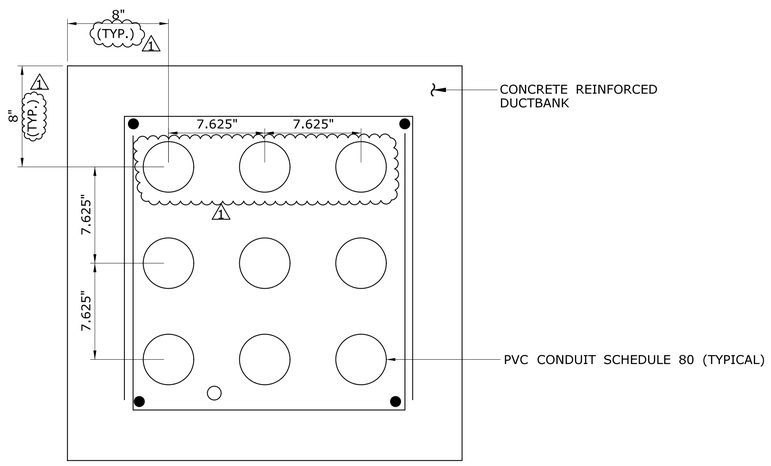

4" PVC DUCT BANKS - 9 DUCTS
(TYPE C, SEE NOTE 2)

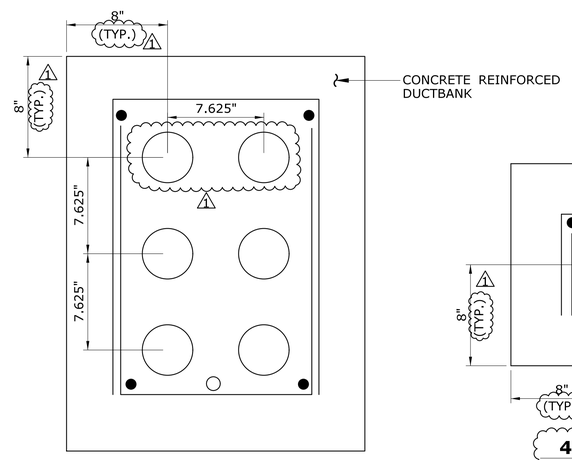

4" PVC DUCT BANKS - 6 DUCTS
(TYPE D, SEE NOTE 2)

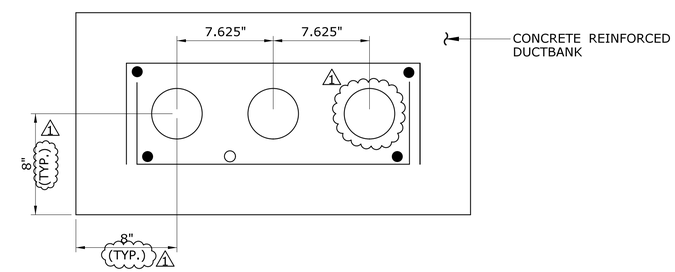

4" PVC DUCT BANKS - 3 DUCTS
(TYPE E, SEE NOTE 2)

NOTE:

1. FOR DUCTBANK NOTES, REFER TO UTILITY DRAWING UTE-303, UTE-302.
2. DUCTBANKS ARE ONLY FOR CONDUITS FROM STANDBY POWER SUBSTATION WEY-1 TO STANDBY OUTLETS AND CONTROL STATIONS, REFER TO DRAWING TRP-105.
3. REFER TO UTE-302 FOR DUCTBANKS FOR REPLACEMENT OF FEEDERS L AND M.
4. IN LOCATIONS WHERE TRACTION POWER AND ELECTRICAL DUCT BANKS RUN SIDE BY SIDE, THE PROFILE OF THE TRACTION POWER DUCT BANK SHALL BE CONSTRUCTED AT THE SAME GRADE AS THE ADJACENT ELECTRICAL DUCT BANK, WHEN POSSIBLE. SEE ELECTRICAL DRAWINGS UTE-200 TO UTE-212. IN OTHER LOCATIONS, THE DUCT BANK SHALL BE CONSTRUCTED PER DETAILS AND NOTES ON DRAWING NO. UTE-302.

ADDENDUM NO. 2

REV.	DATE	REVISION DESCRIPTION	SHEET NO.
1	03/08/2019	REVISED DUCT BANK SIZES AND DIMENSIONS, ADD NOTE 4	15.024.A2

THE INFORMATION, INCLUDING ESTIMATED QUANTITIES OF WORK, SHOWN ON THESE SHEETS IS BASED ON LIMITED INVESTIGATIONS BY THE STATE AND IS IN NO WAY WARRANTED TO INDICATE THE CONDITIONS OF ACTUAL QUANTITIES OF WORK WHICH WILL BE REQUIRED.

Plotted Date: 3/13/2019

DESIGNER/DRAFTER: AA
CHECKED BY: EF
NOT TO SCALE

STATE OF CONNECTICUT
DEPARTMENT OF TRANSPORTATION

Filename: ...\TRP-116_A2_CNS_SHEET_0300-0138.dgn

SIGNATURE/BLOCK:
STV Incorporated
185 Plains Road
Suite 208E
Milford, CT 06461

PROJECT TITLE:
NEW HAVEN RAIL YARD FACILITIES IMPROVEMENTS WEST END YARD

TOWN: **NEW HAVEN**

DRAWING TITLE: **ELECTRICAL DUCTBANK DETAILS**

PROJECT NO. **300-0138**
DRAWING NO. **TRP-116**
SHEET NO. **15.024.A2**

PHASE CABLE SCHEDULE

NO.	PHASE FEEDER NO.	ORIGIN	DESTINATION	PHASE FEEDER NAME	QUANTITY/ CABLE SIZE	CONDUIT SIZE/TYPE	RATING (KV)	APPROX LENGTH (FT)	REMARKS
001	P01	SUBSTATION 1060	EXIST STR TP6	4F	EXISTING	EXISTING	EXISTING	EXISTING	EXISTING, SEE RELOCATION OF FEEDER TO WEY-39 ON DRAWING TRP-100 AND TRP-310.
002	P02	SUBSTATION 1086	EXIST MANHOLE 1086	YD4	2- 750 KCMIL + 1 #4/O BARE COPPER GROUND	6" ALUMINUM	35	80	INSULATED CABLE, COPPER, IN EXISTING DUCTBANKS
003	P02	EXIST MANHOLE 1086	WEST OF EXIST STR #1086	YD4	2- 750 KCMIL + 1 #4/O BARE COPPER GROUND	6" ALUMINUM	35	20	INSULATED CABLE, COPPER, IN EXISTING DUCTBANKS
004	P02	WEST OF EXIST STR #1086	EAST OF EXIST STR #1086	YD4	2- 750 KCMIL + 1 #4/O BARE COPPER GROUND	6" ALUMINUM	35	150	INSULATED CABLE, COPPER, IN EXISTING CONDUIT
005	P02	EAST OF EXIST STR #1086	EXIST STR #1070A	YD4	1- 500 KCMIL	AERIAL	35	2400	BARE COPPER
006	P02	EXIST STR #1070A	WEST OF EXIST STR #WY9	YD4	1- 500 KCMIL	AERIAL	35	100	BARE COPPER
007	P02	WEST OF EXIST STR #WY9	EAST OF EXIST STR #WY9	YD4	2- 750 KCMIL + 1 #4/O BARE COPPER GROUND	6" ALUMINUM	35	90	INSULATED CABLE, COPPER
008	P02	EAST OF EXIST STR #WY9	POLE WEY-26	YD4	1- 500 KCMIL	AERIAL	35	300	BARE COPPER
009	P03	EXIST STR #1070A	WEST OF EXIST STR #WY9	SM1	1- 500 KCMIL	AERIAL	35	100	BARE COPPER
010	P03	WEST OF EXIST STR #WY9	EAST OF EXIST STR #WY9	SM1	2- 750 KCMIL + 1 #4/O BARE COPPER GROUND	6" ALUMINUM	35	90	INSULATED CABLE, COPPER
011	P03	EAST OF EXIST STR #WY9	POLE WEY-21	SM1	1- 500 KCMIL + 1 #4/O BARE COPPER GROUND	AERIAL	35	300	BARE COPPER
012	P04	HALLOCK SUBSTATION	EMH-42	M	3- 500 KCMIL + 1 #4/O GROUND	5" PVC	15	240	INSULATED CABLE, COPPER, IN EXISTING DUCTBANK
013	P04	EMH-42	SW-42	M	3- 500 KCMIL + 1 #4/O GROUND	5" PVC	15	50	INSULATED CABLE, COPPER, IN EXISTING DUCTBANK
014	P04	SW-42	EMH-42	M	3- 500 KCMIL + 1 #4/O GROUND	5" PVC	15	50	INSULATED CABLE, COPPER, IN EXISTING DUCTBANK
015	P04	EMH-42	NEAR SW-2	M	3- 500 KCMIL + 1 #4/O GROUND	5" PVC	15	250	INSULATED CABLE, COPPER, IN EXISTING DUCTBANK, SEE STEP 2.C ON DRAWING TRP-109
016	P04	NEAR SW-2	EV-1	M	3- 500 KCMIL + 1 #4/O GROUND	5" PVC	15	65	INSULATED CABLE, COPPER, IN TYPE 3 DUCT 1, SEE UTILITY DRAWINGS UTE-001 TO UTE-004
017	P04	EV-1	EMH-425	M	3- 500 KCMIL + 1 #4/O GROUND	5" PVC	15	520	INSULATED CABLE, COPPER, IN TYPE 4 DUCT 1, SEE UTILITY DRAWINGS UTE-001 TO UTE-004
018	P04	EMH-425	EMH-420	M	3- 500 KCMIL + 1 #4/O GROUND	5" PVC	15	530	INSULATED CABLE, COPPER, IN TYPE 4 DUCT 1, SEE UTILITY DRAWINGS UTE-001 TO UTE-004
019	P04	EMH-420	EMH-415	M	3- 500 KCMIL + 1 #4/O GROUND	5" PVC	15	450	INSULATED CABLE, COPPER, IN TYPE 4 DUCT 1, SEE UTILITY DRAWINGS UTE-001 TO UTE-004
020	P04	EMH-415	EMH-410	M	3- 500 KCMIL + 1 #4/O GROUND	5" PVC	15	320	INSULATED CABLE, COPPER, IN TYPE 4 DUCT 1, SEE UTILITY DRAWINGS UTE-001 TO UTE-004
021	P04	EMH-410	EMH-405	M	3- 500 KCMIL + 1 #4/O GROUND	5" PVC	15	170	INSULATED CABLE, COPPER, IN TYPE 4 DUCT 1, SEE UTILITY DRAWINGS UTE-001 TO UTE-004
022	P04	EMH-405	POLE #16	M	3- 500 KCMIL + 1 #4/O GROUND	5" PVC	15	100	INSULATED CABLE, COPPER, IN TYPE 1 DUCT 1, SEE UTILITY DRAWINGS UTE-001 TO UTE-004
023	P05	EMH-405	EMH-400	M	3- 500 KCMIL + 1 #4/O GROUND	5" PVC	15	210	INSULATED CABLE, COPPER, IN TYPE 2 DUCT 1, SEE UTILITY DRAWINGS UTE-001 TO UTE-004
024	P05	EMH-400	STANDBY SUBSTATION (WEY-1)	M	3- 500 KCMIL + 1 #4/O GROUND	5" PVC	15	70	INSULATED CABLE, COPPER, IN TYPE 1 DUCT 1, SEE UTILITY DRAWINGS UTE-001 TO UTE-004
025	P06	EV-1	EMH-430	M	3- 500 KCMIL + 1 #4/O GROUND	5" PVC	15	150	INSULATED CABLE, COPPER, IN TYPE 5 DUCT 2, SEE UTILITY DRAWINGS UTE-001 TO UTE-004
026	P06	EMH-430	LOAD CENTER NEAR EMH-430	M	3- 500 KCMIL + 1 #4/O GROUND	5" PVC	15	60	INSULATED CABLE, COPPER, IN TYPE 1 DUCT 1, SEE UTILITY DRAWINGS UTE-001 TO UTE-004
027	P07	HALLOCK SUBSTATION	MH-14	L	3- 500 KCMIL + 1 #4/O GROUND	EXISTING	15	180	INSULATED CABLE, COPPER, IN EXISTING DUCTBANK
028	P07	MH-14	EMH-435	L	3- 500 KCMIL + 1 #4/O GROUND	5" PVC	15	60	INSULATED CABLE, COPPER, IN TYPE 4 DUCT 1, SEE UTILITY DRAWINGS UTE-001 TO UTE-004
029	P07	EMH-435	EMH-430	L	3- 500 KCMIL + 1 #4/O GROUND	5" PVC	15	170	INSULATED CABLE, COPPER, IN TYPE 4 DUCT 1, SEE UTILITY DRAWINGS UTE-001 TO UTE-004
030	P07	EMH-430	EV-1	L	3- 500 KCMIL + 1 #4/O GROUND	5" PVC	15	150	INSULATED CABLE, COPPER, IN TYPE 5 DUCT 1, SEE UTILITY DRAWINGS UTE-001 TO UTE-004
031	P07	EV-1	EMH-440	L	3- 500 KCMIL + 1 #4/O GROUND	5" PVC	15	90	INSULATED CABLE, COPPER, IN TYPE 4 DUCT 1, SEE UTILITY DRAWINGS UTE-001 TO UTE-004
032	P07	EMH-440	EMH-445	L	3- 500 KCMIL + 1 #4/O GROUND	5" PVC	15	180	INSULATED CABLE, COPPER, IN TYPE 4 DUCT 1, SEE UTILITY DRAWINGS UTE-001 TO UTE-004
033	P07	EMH-445	POLE #63	L	3- 500 KCMIL + 1 #4/O GROUND	5" PVC	15	50	INSULATED CABLE, COPPER, IN TYPE 1 DUCT 1, SEE UTILITY DRAWINGS UTE-001 TO UTE-004

RETURN CABLE SCHEDULE

NO.		ORIGIN	DESTINATION	QUANTITY/CABLE SIZE	CONDUIT SIZE/TYPE	RATING (VOLTS)	APPROX LENGTH (FT)	REMARKS
001	R01	STRUCTURE WEY-1	COPPER BUS @ TRACK 44	1-500 KCMIL	5" PVC	600 V	20 FT EACH	
002	R02	COPPER BUS @ TRACK 44	COPPER BUS @ TRACK 48	4-350 KCMIL	5" PVC	600 V	25 FT EACH	NORTH & SOUTH
003	R03	COPPER BUS @ TRACK 48	COPPER BUS @ TRACK 49	4-350 KCMIL	5" PVC	600 V	20 FT EACH	NORTH & SOUTH
004	R04	COPPER BUS @ TRACK 49	COPPER BUS @ TRACK 50	4-350 KCMIL	5" PVC	600 V	25 FT EACH	NORTH & SOUTH
005	R05	COPPER BUS @ TRACK 50	COPPER BUS @ TRACK 51	4-350 KCMIL	5" PVC	600 V	20 FT EACH	NORTH & SOUTH
006	R06	COPPER BUS @ TRACK 51	COPPER BUS @ TRACK 52	4-350 KCMIL	5" PVC	600 V	25 FT EACH	NORTH & SOUTH
007	R07	COPPER BUS @ TRACK 52	COPPER BUS @ TRACK 53	4-350 KCMIL	5" PVC	600 V	20 FT EACH	NORTH & SOUTH
008	R08	COPPER BUS @ TRACK 53	STRUCTURE WEY-1	1-500 KCMIL	5" PVC	600 V	20 FT EACH	
009	R09	EACH COPPER BUS	RUNNING RAILS (EACH TRACK)	28-250 KCMIL	5" PVC	600 V	6 FT EACH	7 TRACK TOTAL
010	R10	STRUCTURE WEY-9	COPPER BUS @ TRACK 44	1-500 KCMIL	5" PVC	600 V	20 FT EACH	NORTH
011	R11	COPPER BUS @ TRACK 53	STRUCTURE WEY-9	1-500 KCMIL	5" PVC	600 V	20 FT EACH	

POWER CABLE SCHEDULE (FROM WEY-1 TO DIESEL TRACKS)

CABLE NO.	FEEDER NO.	ORIGIN	DESTINATION	QUANTITY/CABLE SIZE	CONDUIT SIZE/TYPE	RATING (VOLTS)	APPROX LENGTH (FT)
C1	52-1	WEY-1	NEW EMH-500, 601	2 x (3-500 KCMIL + 1#1/0G)	2-5" PVC	600 V	150 FT EACH
C1	52-1	EMH-601	TRACK 81 (STANDBY OUTLET)	2 x (3-500 KCMIL + 1#1/0G)	2-4" PVC	600 V	80 FT EACH 1
C2	52-2	WEY-1	EMH-500, 601 1	2 x (3-500 KCMIL + 1#1/0G)	2-5" PVC	600 V	150 FT EACH
C2	52-2	EMH-601 1	TRACK 82 (STANDBY OUTLET)	2 x (3-500 KCMIL + 1#1/0G)	2-4" PVC	600 V	120 FT EACH 1
C3	52-3	WEY-1	EMH-500, 601 1	2 x (3-500 KCMIL + 1#1/0G)	2-5" PVC	600 V	150 FT EACH
C3	52-3	EMH-601 1	TRACK 83 (STANDBY OUTLET)	2 x (3-500 KCMIL + 1#1/0G)	2-4" PVC	600 V	125 FT EACH 1
C4	52-4	WEY-1	EMH-500,601 1	2 x (3-500 KCMIL + 1#1/0G)	2-5" PVC	600 V	150 FT EACH
C4	52-4	EMH-601 1	TRACK 84 (STANDBY OUTLET)	2 x (3-500 KCMIL + 1#1/0G)	2-4" PVC	600 V	165 FT EACH 1
C5	52-5	WEY-1	EMH-500, 601 1	2 x (3-500 KCMIL + 1#1/0G)	2-5" PVC	600 V	150 FT EACH
C5	52-5	EMH-601 1	TRACK 85 (STANDBY OUTLET)	2 x (3-500 KCMIL + 1#1/0G)	2-4" PVC	600 V	170 FT EACH 1

1

CONTROL CABLE SCHEDULE (FROM WEY-1 TO DIESEL TRACKS)

CABLE NO.	FEEDER NO.	ORIGIN	DESTINATION	QUANTITY/CABLE SIZE	CONDUIT SIZE/TYPE	RATING (VOLTS)	APPROX LENGTH (FT)
C6	52-1	WEY-1	EMH-500, 601	14 x #10	5" PVC	600 V	150 FT EACH
C6	52-1	EMH-601	TRACK 81 (STANDBY OUTLET)	14 x #10	4" PVC	600 V	100 FT EACH
C7	52-2	WEY-1	EMH-500, 601 1	14 x #10	5" PVC	600 V	150 FT EACH
C7	52-2	EMH-601 1	TRACK 82 (STANDBY OUTLET)	14 x #10	1 4" PVC	600 V	150 FT EACH
C8	52-3	WEY-1	EMH-500, 601 1	14 x #10	5" PVC	600 V	150 FT EACH
C8	52-3	EMH-601 1	TRACK 83 (STANDBY OUTLET)	14 x #10	4" PVC	600 V	160 FT EACH
C9	52-4	WEY-1	EMH-500, 601 1	14 x #10	5" PVC	600 V	150 FT EACH
C9	52-4	EMH-601 1	TRACK 84 (STANDBY OUTLET)	14 x #10	4" PVC	600 V	300 FT EACH
C10	52-5	WEY-1	EMH-500, 601 1	14 x #10	5" PVC	600 V	150 FT EACH
C10	52-5	EMH-601 1	TRACK 85 (STANDBY OUTLET)	14 x #10	4" PVC	600 V	310 FT EACH

ADDENDUM NO. 2

REV.	DATE	REVISION DESCRIPTION	SHEET NO.
1	03/08/2019	POWER CABLE SCHEDULE CORRECTIONS	15.033.A2

THE INFORMATION, INCLUDING ESTIMATED QUANTITIES OF WORK, SHOWN ON THESE SHEETS IS BASED ON LIMITED INVESTIGATIONS BY THE STATE AND IS IN NO WAY WARRANTED TO INDICATE THE CONDITIONS OF ACTUAL QUANTITIES OF WORK WHICH WILL BE REQUIRED.

Plotted Date: 3/13/2019

DESIGNER/DRAFTER: AA

CHECKED BY: EF

STATE OF CONNECTICUT
DEPARTMENT OF TRANSPORTATION

Filename: ...\TRP-208_A2_CNS_SHEET_0300-0138.dgn

SIGNATURE/ BLOCK:

STV Incorporated
185 Plains Road
Suite 208E
Milford, CT 06461

PROJECT TITLE:
NEW HAVEN RAIL YARD FACILITIES IMPROVEMENTS WEST END YARD

TOWN: NEW HAVEN

DRAWING TITLE: CABLE AND CONDUIT SCHEDULE

PROJECT NO. 300-0138

DRAWING NO. TRP-208

SHEET NO. 15.033.A2

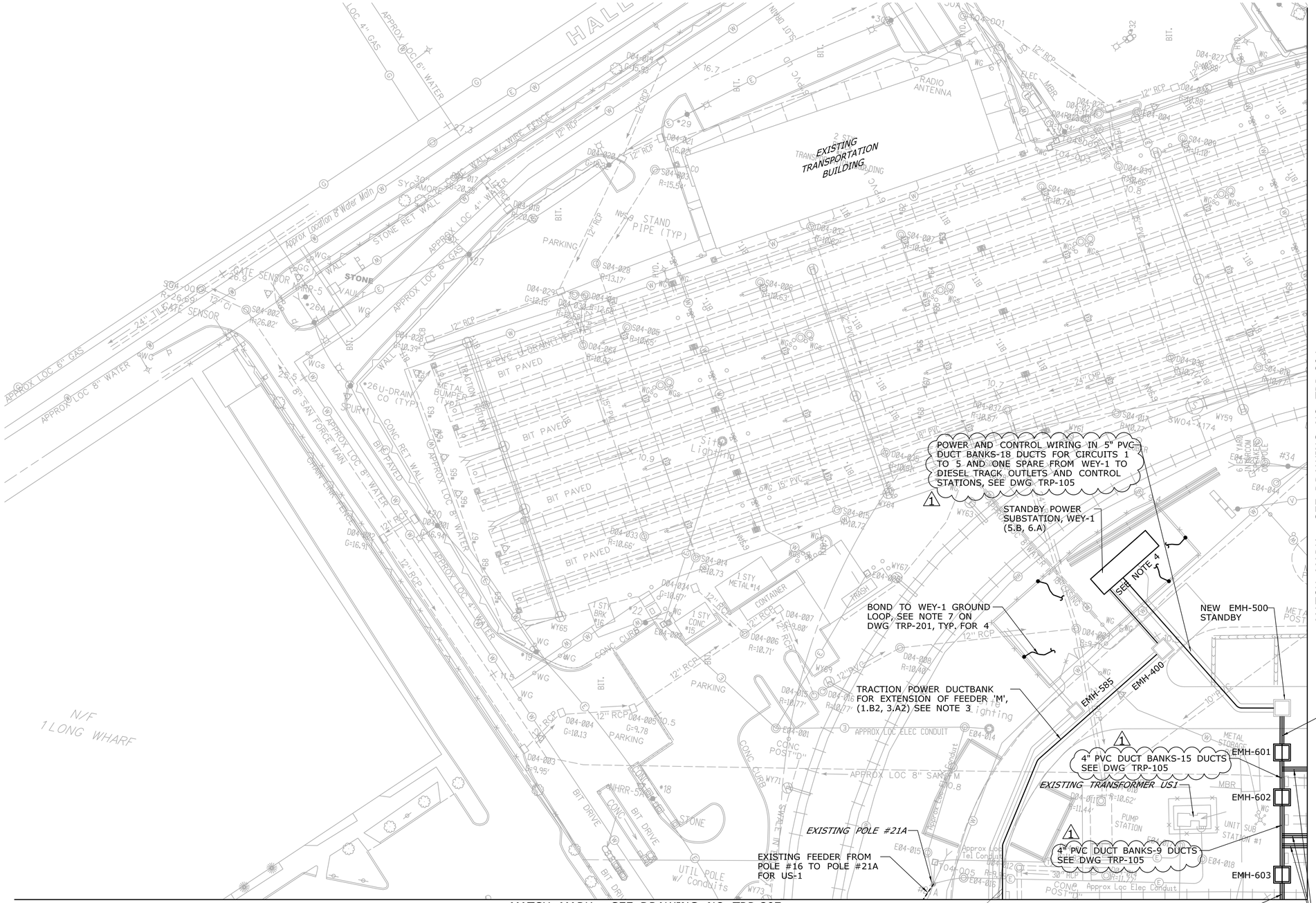

CONNECTICUT COORDINATE GRID

LEGEND:

	ELECTRIC DUCT BANK
	ELECTRIC MANHOLE
TP	TRACTION POWER CABLE
(3.A2)	INDICATES THE STEPS OF REPLACEMENT OF FEEDERS 'L' AND 'M', SEE DWG TRP-107 TO TRP-114

NOTES:

1. REFER TO COMM AND UTILTIES DRAWINGS FOR ADDITIONAL INFORMATION.
2. ALL MANHOLES AND DUCTBANKS ARE NEW UNLESS OTHERWISE NOTED.
3. FOR REPLACEMENT OF FEEDER 'M' AND 'L' NOTES SEE DWGS TRP-107 TO TRP-114.
4. 6x(3-5" CONDUITS) SHALL ENTER THE VAULT AT 6" ABOVE THE BOTTOM OF INSIDE THE VAULT.

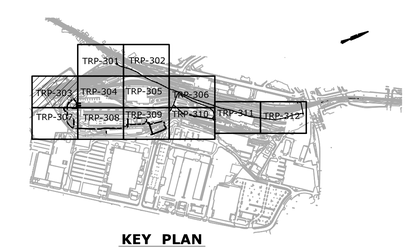

KEY PLAN

ADDENDUM NO. 2

REV.	DATE	REVISION DESCRIPTION	SHEET NO.
1	03/08/2019	REVISED DUCT BANK CALLOUTS	15.037.A2

THE INFORMATION, INCLUDING ESTIMATED QUANTITIES OF WORK, SHOWN ON THESE SHEETS IS BASED ON LIMITED INVESTIGATIONS BY THE STATE AND IS IN NO WAY WARRANTED TO INDICATE THE CONDITIONS OF ACTUAL QUANTITIES OF WORK WHICH WILL BE REQUIRED.

Plotted Date: 3/13/2019

DESIGNER/DRAFTER: AA

CHECKED BY: EF

SCALE IN FEET 0 30 60

SCALE 1"=30'

STATE OF CONNECTICUT
DEPARTMENT OF TRANSPORTATION

Filename: ...\TRP-303_A2_CNS_SHEET_0300-0138.dgn

SIGNATURE/BLOCK:

STV Incorporated
185 Plains Road
Suite 208E
Milford, CT 06461

PROJECT TITLE:

NEW HAVEN RAIL YARD FACILITIES IMPROVEMENTS WEST END YARD

TOWN: **NEW HAVEN**

DRAWING TITLE: **TRACTION POWER LAYOUT PLAN 3**

PROJECT NO. **0300-0138**

DRAWING NO. **TRP-303**

SHEET NO. **15.037.A2**

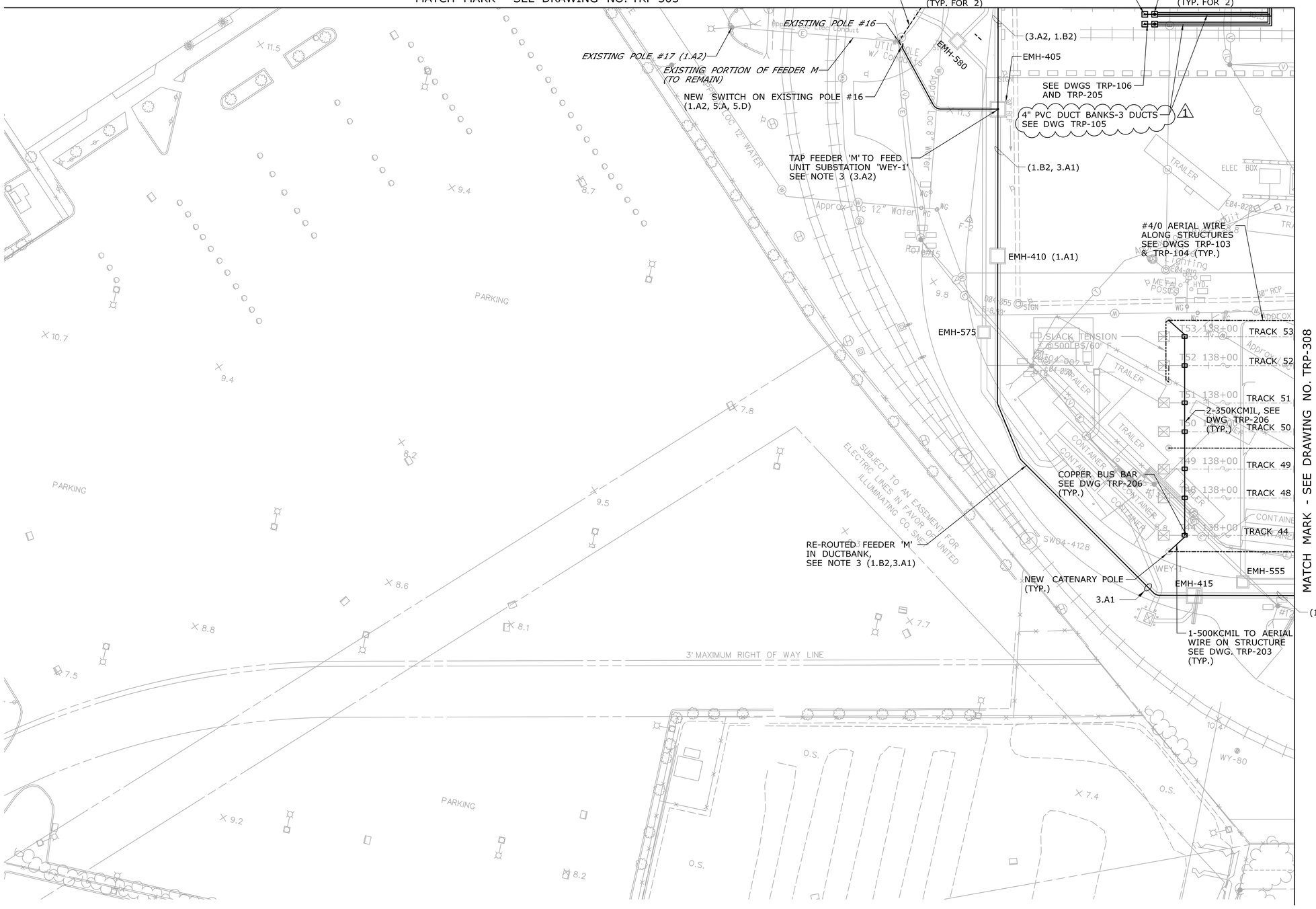

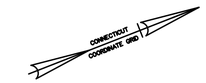

LEGEND:

	ELECTRIC DUCT BANK
	ELECTRIC MANHOLE
—TP—	TRACTION POWER CABLE
(3.A2)	INDICATES THE STEPS OF REPLACEMENT OF FEEDERS 'L' AND 'M', SEE DWG TRP-107 TO TRP-114
--------	AERIAL WIRE

NOTES:

1. REFER TO COMM AND UTILTIES DRAWINGS FOR ADDITIONAL INFORMATION.
2. ALL MANHOLES AND DUCTBANKS ARE NEW UNLESS OTHERWISE NOTED.
3. FOR REPLACEMENT OF FEEDERS 'M' AND 'L' NOTES, REFER TO DWGS. TRP-107 TO TRP-114.

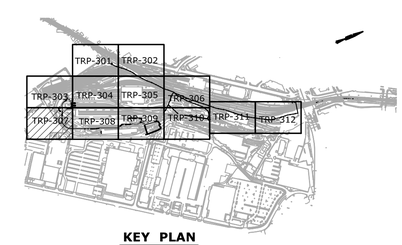

KEY PLAN

ADDENDUM NO. 2

REV.	DATE	REVISION DESCRIPTION	SHEET NO.
1	03/08/2019	REVISED CALLOUT	15.041.A2

THE INFORMATION, INCLUDING ESTIMATED QUANTITIES OF WORK, SHOWN ON THESE SHEETS IS BASED ON LIMITED INVESTIGATIONS BY THE STATE AND IS IN NO WAY WARRANTED TO INDICATE THE CONDITIONS OF ACTUAL QUANTITIES OF WORK WHICH WILL BE REQUIRED.

Plotted Date: 3/13/2019

DESIGNER/DRAFTER: AA
CHECKED BY: EF
SCALE IN FEET 0 30 60
SCALE 1"=30'

STATE OF CONNECTICUT
DEPARTMENT OF TRANSPORTATION

Filename: ...\TRP-307_A2_CNS_SHEET_0300-0138.dgn

SIGNATURE/BLOCK:
STV Incorporated
185 Plains Road
Suite 208E
Milford, CT 06461

PROJECT TITLE:
NEW HAVEN RAIL YARD FACILITIES IMPROVEMENTS WEST END YARD

TOWN: **NEW HAVEN**

DRAWING TITLE: **TRACTION POWER LAYOUT PLAN 7**

PROJECT NO. 0300-0138
DRAWING NO. TRP-307
SHEET NO. 15.041.A2

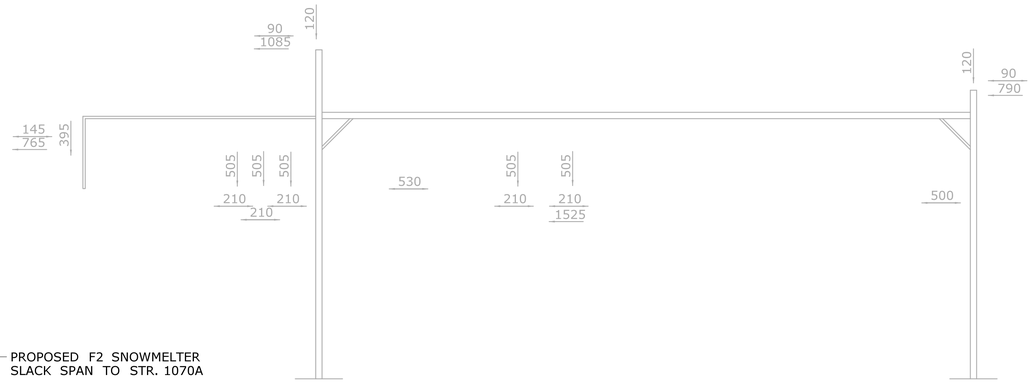

BILL OF MATERIALS			
WIRE NO.	DESCRIPTION	REFERENCE NO.	QTY
FOUNDATION			
STRUCTURAL STEELWORK & GUYS			
	CROSS ARMS	CA-20	2
MISCELLANEOUS & SWITCHING			
	CABLE CROSSING IN CONDUIT ASSEMBLY	CON-1	2
	TERMINATOR ASSEMBLY	CT-1	2
	TERMINATOR ASSEMBLY	CT-1A	2

LOADING DIAGRAM

(55 MPH WIND, ½" ICE ON WIRES, 0° F)

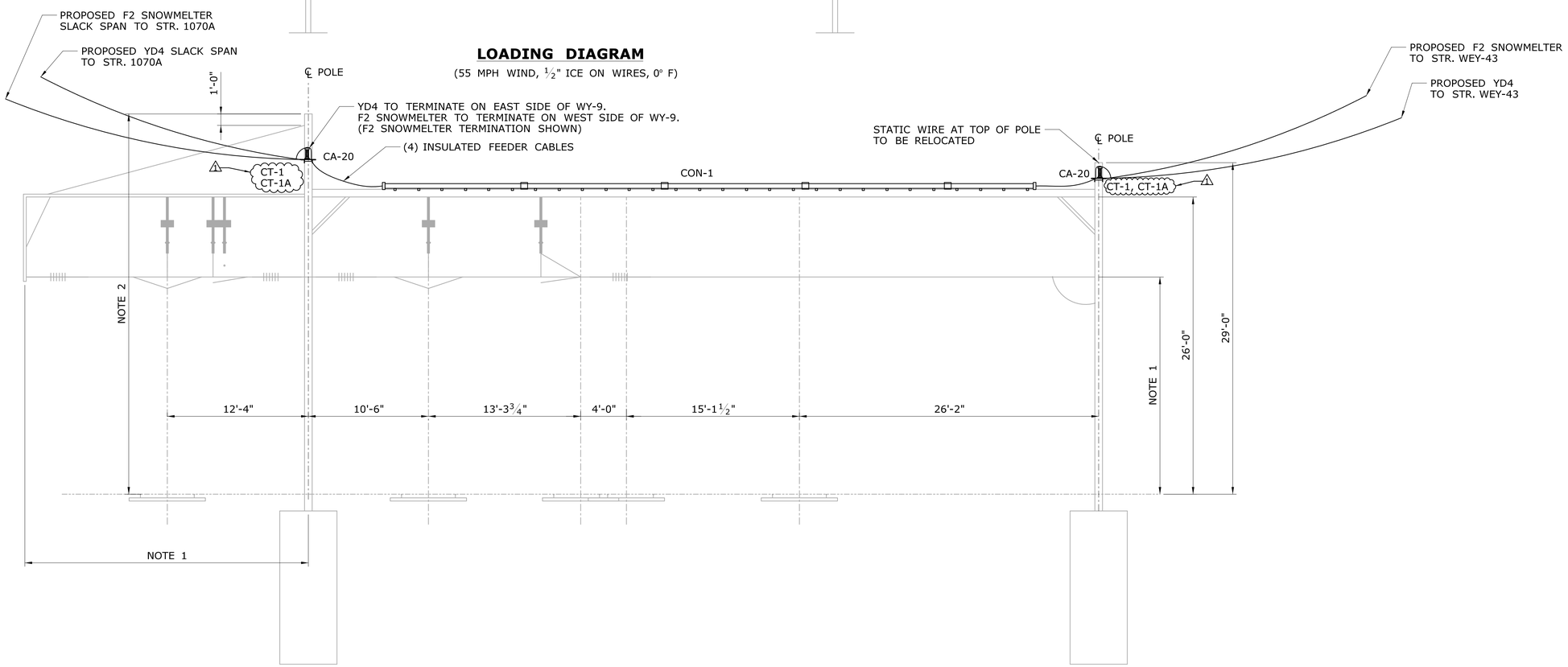

CATENARY STRUCTURE WY-9

LOOKING EAST
SCALE: 3/16" = 1'-0"

NOTES:

1. FOR CLARITY, NOT ALL EXISTING ASSEMBLIES, EQUIPMENT, AND OTHER ITEMS ON THIS STRUCTURE ARE SHOWN.
2. DIMENSION IS NOT AVAILABLE. FIELD MEASURE AS NEEDED.
3. MAINTAIN MINIMUM 3'-6" CLEARANCE FROM EXISTING CABLE SUPPORT ASSEMBLY ABOVE.

ADDENDUM NO. 2

REV.	DATE	REVISION DESCRIPTION	SHEET NO.
1	03/08/2019	REVISE CALLOUT, EDIT BILL OF MATERIALS	15.047.A2

THE INFORMATION, INCLUDING ESTIMATED QUANTITIES OF WORK, SHOWN ON THESE SHEETS IS BASED ON LIMITED INVESTIGATIONS BY THE STATE AND IS IN NO WAY WARRANTED TO INDICATE THE CONDITIONS OF ACTUAL QUANTITIES OF WORK WHICH WILL BE REQUIRED.

Plotted Date: 3/13/2019

DESIGNER/DRAFTER: PM / AM
CHECKED BY: BC
SCALE AS NOTED

STATE OF CONNECTICUT
DEPARTMENT OF TRANSPORTATION

Filename: ...\TRP-326_A2_CNS_SHEET_0300-0138.dgn

SIGNATURE/ BLOCK:

STV Incorporated
185 Plains Road
Suite 208E
Milford, CT 06461

PROJECT TITLE:
NEW HAVEN RAIL YARD
FACILITIES IMPROVEMENTS
WEST END YARD

TOWN: NEW HAVEN

DRAWING TITLE:
EXISTING STRUCTURE MODIFICATION
STRUCTURE DIAGRAM WY-09

PROJECT NO. 0300-0138
DRAWING NO. TRP-326
SHEET NO. 15.047.A2

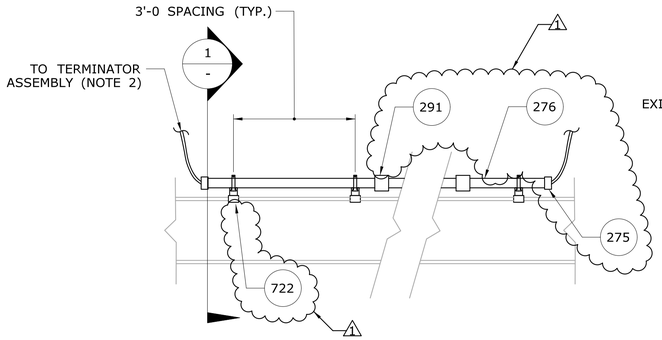

CON-1 - CABLE CROSSING IN CONDUIT

N.T.S.

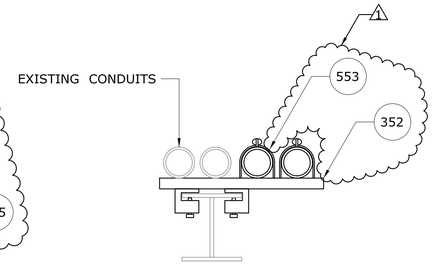

SECTION 1 / -

N.T.S.

BILL OF MATERIALS							
PART NO.	METRO-NORTH NO.	DESCRIPTION	QUANTITY				
			CON-1	XF-1	JU-1	CT-1	10B
37	10202492	STRAIN CLAMP	-	-	-	1*	-
42	10201628	UNIVERSAL PARALLEL CLAMP	-	-	2	1*	-
60	10201621	DEADEND CLAMP	-	1	-	1*	-
95	10445113	SUSPENSION INSULATOR, 25000 LB.	-	1	-	1	-
212	10997113	500 KCMIL HARD DRAWN COPPER CONDUCTOR	-	-	AS REQ'D	AS REQ'D	-
220	10860100	3/4" x6" JAW/JAW TURNBUCKLE	-	1	-	1	-
231	10850255	5/8" ANCHOR SHACKLE WITH 3/4" DIA. PIN	-	1	-	1	-
264	-	4-HOLE U-BOLT TERMINAL LUG (FOR 500 KCMIL COPPER CONDUCTOR)	-	-	-	5	-
266	-	35 KV PORCELAIN TERMINATOR	-	-	-	2	-
267	-	27KV SURGE ARRESTOR	-	-	-	1	-
268	10620750	35KV, PIN TYPE PORCELAIN INSULATOR	-	-	-	-	1
275	-	6" DIA. CONDUIT SEALING BUSHING	2	-	-	-	-
276	-	6" DIA. RIGID ALUMINUM CONDUIT	AS REQ'D	-	-	-	-
291	-	6" DIA. RIGID ALUMINUM CONDUIT COUPLER	AS REQ'D	-	-	-	-
323	49493645	FORGED STEEL PIN FOR 35KV PIN INSULATOR	-	-	-	-	1
352	-	1 5/8" STRUT CHANNEL, STAINLESS STEEL	AS REQ'D	-	-	-	-
553	-	6" DIA. CONDUIT CLAMP, STAINLESS STEEL	AS REQ'D	-	-	-	-
722	-	BEAM CLAMP	AS REQ'D	-	-	-	-

* STRAIN CLAMP (PART #37) MAY BE SUBSTITUTED FOR DEADEND CLAMP (PART #60) AS NEEDED. FOR THIS ARRANGEMENT, PARALLEL CLAMP (PART #42) IS NOT REQUIRED.

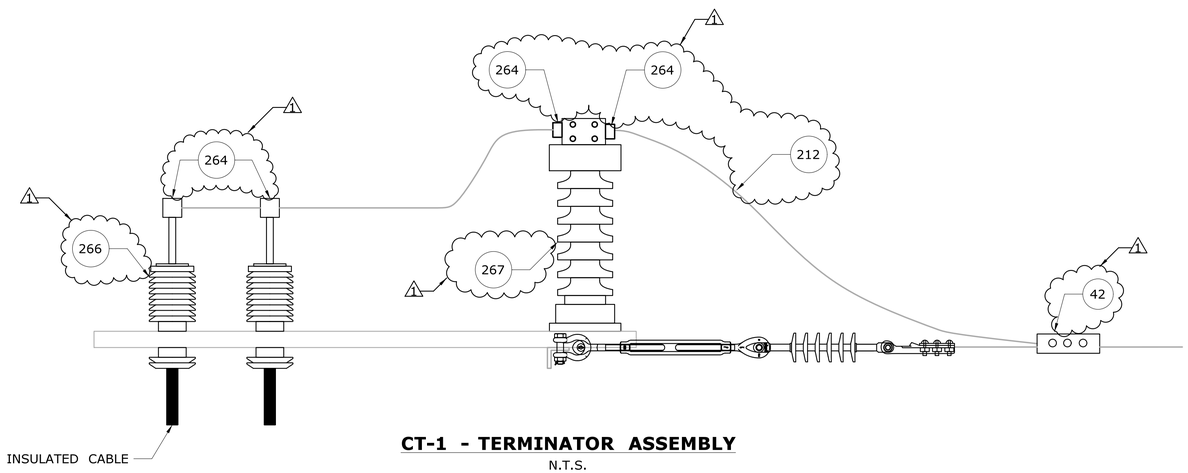

CT-1 - TERMINATOR ASSEMBLY

N.T.S.

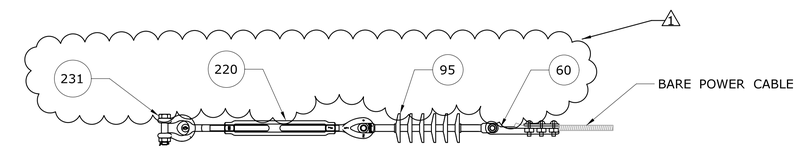

XF-1 - FEEDER TERMINATION ASSEMBLY

N.T.S.

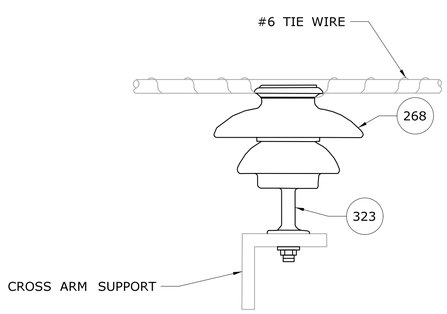

10B - PIN INSULATOR ASSEMBLY

N.T.S.

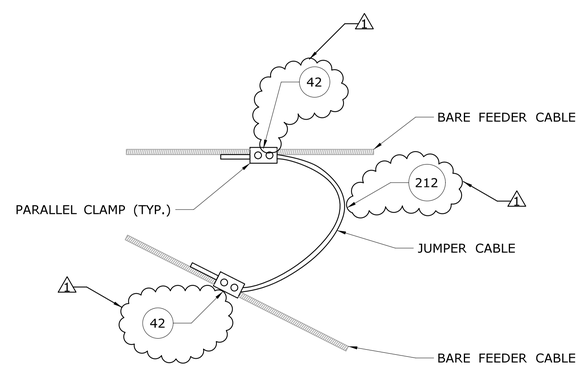

JU-1 - JUMPER CABLE ASSEMBLY

N.T.S.

NOTES:

1. CONTRACTOR TO FIELD VERIFY ALL ASSEMBLIES PRIOR TO FABRICATION AND INSTALLATION.
2. CONTRACTOR TO PROVIDE CHAFING GUARD TO PROTECT CABLES IF NEEDED.
3. SURGE ARRESTORS SHALL BE BONDED TO GROUNDED STRUCTURAL STEEL.

ADDENDUM NO. 2

REV.	DATE	REVISION DESCRIPTION	SHEET NO.
1	03/08/2019	ADD BILL OF MATERIALS, EDIT CALLOUTS	15.069.A2

THE INFORMATION, INCLUDING ESTIMATED QUANTITIES OF WORK, SHOWN ON THESE SHEETS IS BASED ON LIMITED INVESTIGATIONS BY THE STATE AND IS IN NO WAY WARRANTED TO INDICATE THE CONDITIONS OF ACTUAL QUANTITIES OF WORK WHICH WILL BE REQUIRED.

Plotted Date: 3/13/2019

DESIGNER/DRAFTER: PM / AM

CHECKED BY: BC

SCALE AS NOTED

STATE OF CONNECTICUT
DEPARTMENT OF TRANSPORTATION

Filename: ...\TRP-401_A2_CNS_SHEET_0300-0138.dgn

SIGNATURE/BLOCK:

STV Incorporated
185 Plains Road
Suite 208E
Milford, CT 06461

PROJECT TITLE:
NEW HAVEN RAIL YARD
FACILITIES IMPROVEMENTS
WEST END YARD

TOWN: NEW HAVEN

DRAWING TITLE: ASSEMBLY DETAILS
SHEET 1 OF 4

PROJECT NO. 0300-0138

DRAWING NO. TRP-401

SHEET NO. 15.069.A2

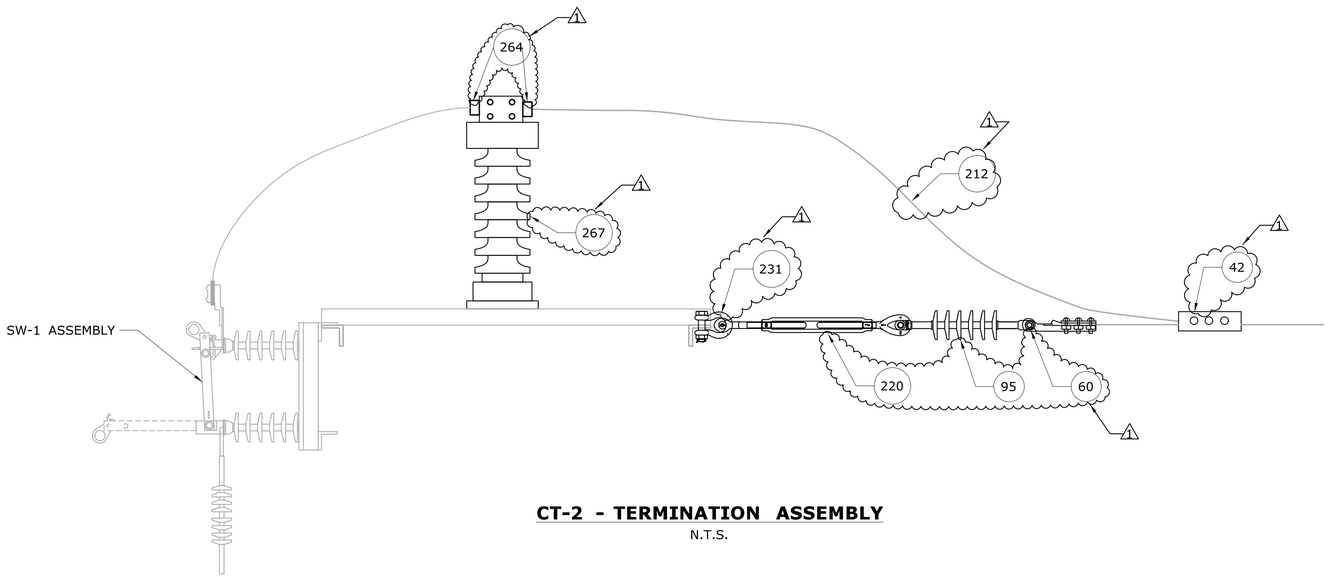

CT-2 - TERMINATION ASSEMBLY

N.T.S.

BILL OF MATERIALS					
PART NO.	METRO-NORTH NO.	DESCRIPTION	QUANTITY		
			CT-1A	CT-2	SW-1
37	10202492	STRAIN CLAMP	1*	1*	-
42	10201628	UNIVERSAL PARALLEL CLAMP	1*	1*	-
60	10201621	DEADEND CLAMP	1*	1*	-
95	10445113	SUSPENSION INSULATOR, 25000 LB.	1	1	-
212	10997113	500 KCMIL HARD DRAWN COPPER CONDUCTOR	-	AS REQ'D	AS REQ'D
220	10860100	3/4" x6" JAW/JAW TURNBUCKLE	1	1	-
231	10850255	5/8" ANCHOR SHACKLE WITH 3/4" DIA. PIN	1	1	-
263	-	4-HOLE U-BOLT TERMINAL LUG (FOR 4/0 KCMIL COPPER CONDUCTOR)	5	-	-
264	-	4-HOLE U-BOLT TERMINAL LUG (FOR 500 KCMIL COPPER CONDUCTOR)	-	2	1
265	-	TWO CONDUCTOR U-BOLT TERMINAL LUG (FOR 500 KCMIL COPPER CONDUCTOR)	-	-	1
266	-	35 KV PORCELAIN TERMINATOR	2	-	2
267	-	27KV SURGE ARRESTOR	1	1	-
271	-	25KV 1200ADISCONNECT SWITCH, HOOKSTICK OPERATED	-	-	1
283	-	4/0 AWG HARD DRAWN COPPER CONDUCTOR	AS REQ'D	-	-

* STRAIN CLAMP (PART #37) MAY BE SUBSTITUTED FOR DEADEND CLAMP (PART #60) AS NEEDED. FOR THIS ARRANGEMENT, PARALLEL CLAMP (PART #42) IS NOT REQUIRED.

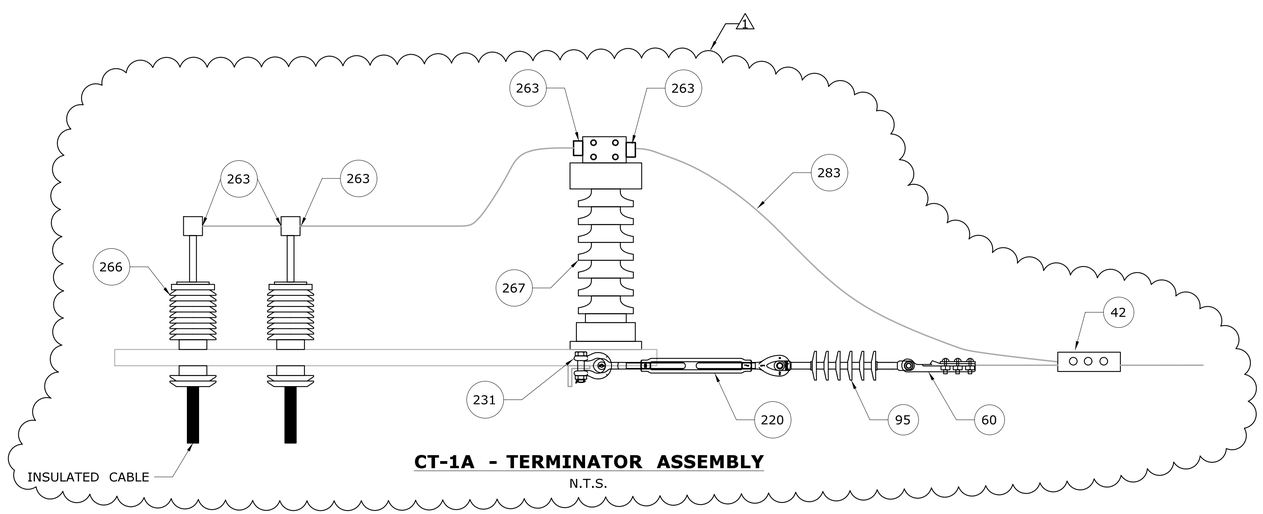

CT-1A - TERMINATOR ASSEMBLY

N.T.S.

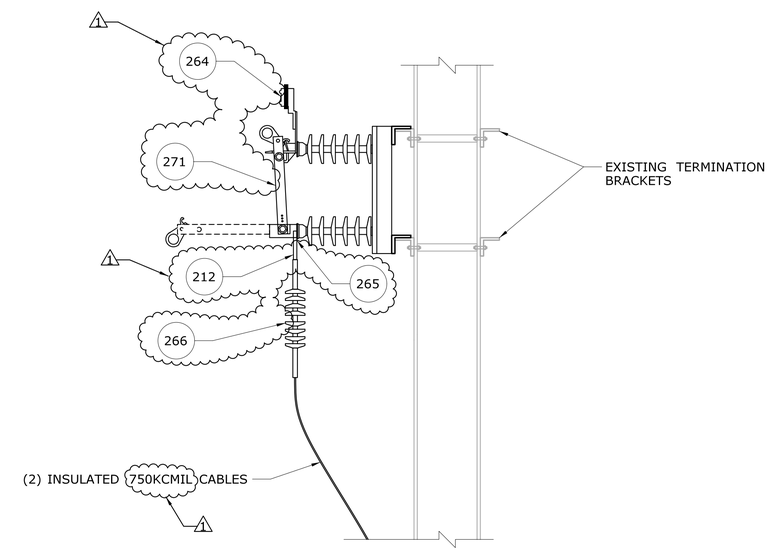

SW-1 SWITCHING ASSEMBLY

N.T.S.

NOTES:

1. CONTRACTOR TO FIELD VERIFY ALL EXISTING ASSEMBLIES PRIOR TO FABRICATION AND INSTALLATION.
2. SURGE ARRESTORS SHALL BE BONDED TO GROUNDED STRUCTURAL STEEL.

ADDENDUM NO. 2

REV.	DATE	REVISION DESCRIPTION	SHEET NO.
1	03/08/2019	ADD BILL OF MATERIALS, REVISE CALLOUTS, ADD NOTE NO. 2	15.070.A2

THE INFORMATION, INCLUDING ESTIMATED QUANTITIES OF WORK, SHOWN ON THESE SHEETS IS BASED ON LIMITED INVESTIGATIONS BY THE STATE AND IS IN NO WAY WARRANTED TO INDICATE THE CONDITIONS OF ACTUAL QUANTITIES OF WORK WHICH WILL BE REQUIRED.

Plotted Date: 3/13/2019

DESIGNER/DRAFTER: PM / AM

CHECKED BY: BC

SCALE AS NOTED

STATE OF CONNECTICUT
DEPARTMENT OF TRANSPORTATION

Filename: ...\TRP-402_A2_CNS_SHEET_0300-0138.dgn

SIGNATURE/BLOCK:

STV Incorporated
185 Plains Road
Suite 208E
Milford, CT 06461

PROJECT TITLE:
NEW HAVEN RAIL YARD FACILITIES IMPROVEMENTS WEST END YARD

TOWN: NEW HAVEN

DRAWING TITLE: ASSEMBLY DETAILS SHEET 2 OF 4

PROJECT NO. 0300-0138

DRAWING NO. TRP-402

SHEET NO. 15.070.A2

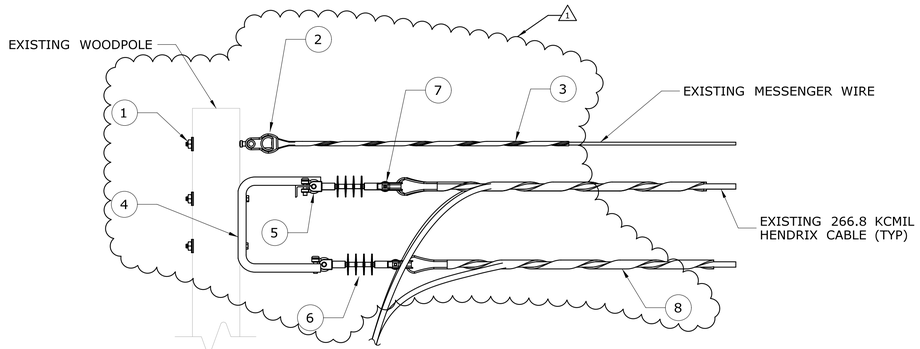

WPDE-1
WOODPOLE DEADEND
ASSEMBLY

BILL OF MATERIALS					
PART NO.	METRO-NORTH NO.	DESCRIPTION	QUANTITY		
			WPDE-1	DGA-1	HA-1
1	-	EYEBOLT	1	1	-
2	-	HEAVY DUTY THIMBLE CLEVIS, HENDRIX #HDTC	1	-	-
3	-	MESSENGER GRIP, HENDRIX #MG-4122	1	-	-
4	-	CHANNEL BRACKET, HENDRIX #BD-35	1	-	-
5	-	SHACKLE CLEVIS, HENDRIX #SC	3	-	-
6	-	INSULATOR, HENDRIX #DEINS35	3	-	-
7	-	STANDARD DUTY THIMBLE CLEVIS, HENDRIX #TC	3	-	-
8	-	CONDUCTOR GRIP, HENDRIX #CG-0119	3	-	-
9	-	7 NO. 7 ALUMOWELD WIRE, AFL GLOBAL	-	AS REQD	-
10	-	STRANDVISE, MACLEAN #5255	-	1	-
11	-	EXTRA HEAVY THIMBLE, CROSBY #1037693	-	1	-
12	-	PREFORMED WIRE GRIP, PREFORMED PRODUCTS #AWDE-4126	-	1	-
13	-	JAW-JAW TURNBUCKLE, CROSBY #1032938	-	-	1
14	-	SCREW ANCHOR, ALLIED BOLT #35530	-	-	1
15	-	10' ANCHOR EXTENSION, ALLIED BOLT #35630	-	-	1

NOTES:

1. PART NUMBERS FOR ASSEMBLIES, HARDWARE, AND OTHER COMPONENTS SPECIFIED HEREIN ARE FOR REFERENCE PURPOSES ONLY. APPROVED EQUAL PRODUCTS ARE PERMITTED UNLESS OTHERWISE NOTED.

1

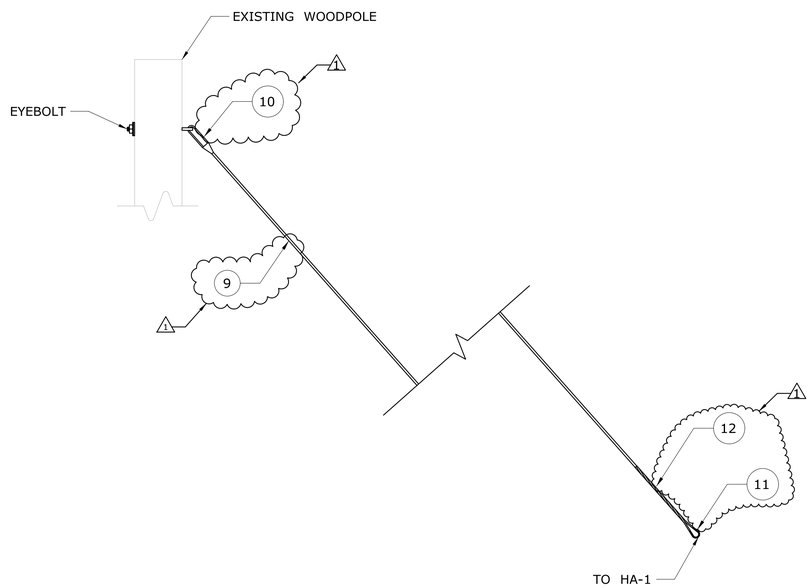

DGA-1 - TYPICAL DOWNGUY ASSEMBLY

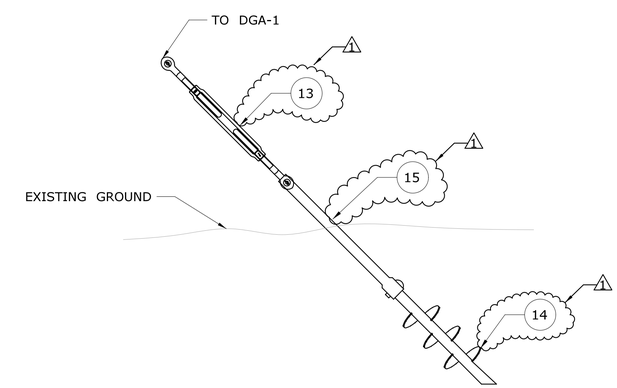

HA-1 - HELICAL ANCHOR ASSEMBLY

ADDENDUM NO. 2

REV.	DATE	REVISION DESCRIPTION	SHEET NO.
1	03/08/2019	ADD BILL OF MATERIALS, EDIT CALLOUTS	15.071.A2

THE INFORMATION, INCLUDING ESTIMATED QUANTITIES OF WORK, SHOWN ON THESE SHEETS IS BASED ON LIMITED INVESTIGATIONS BY THE STATE AND IS IN NO WAY WARRANTED TO INDICATE THE CONDITIONS OF ACTUAL QUANTITIES OF WORK WHICH WILL BE REQUIRED.

Plotted Date: 3/13/2019

DESIGNER/DRAFTER: BD
CHECKED BY: BC
NOT TO SCALE

STATE OF CONNECTICUT
DEPARTMENT OF TRANSPORTATION

Filename: ...\TRP-403_A2_A2_CNS_SHEET_0300-0138.dgn

SIGNATURE/ BLOCK:

STV Incorporated
185 Plains Road
Suite 208E
Milford, CT 06461

PROJECT TITLE:
NEW HAVEN RAIL YARD FACILITIES IMPROVEMENTS WEST END YARD

TOWN: **NEW HAVEN**

DRAWING TITLE: **ASSEMBLY DETAILS SHEET 3 OF 4**

PROJECT NO. **0300-0138**
DRAWING NO. **TRP-403**
SHEET NO. **15.071.A2**

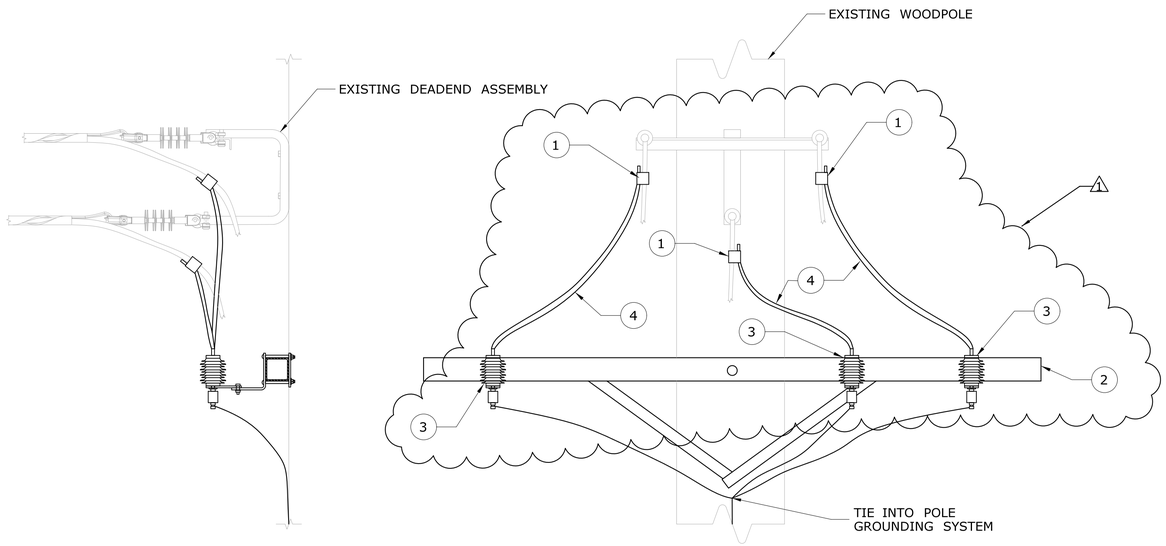

LA-1
LIGHTNING ARRESTER ASSEMBLY

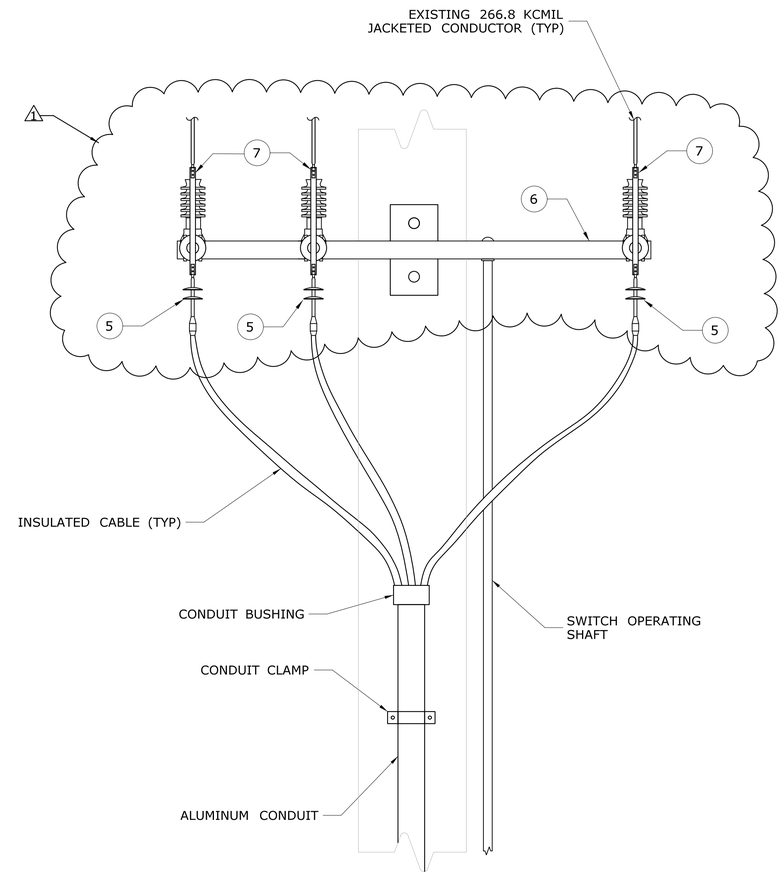

SW-2
SECTIONALIZING SWITCH ASSEMBLY

BILL OF MATERIALS				
PART NO.	METRO-NORTH	DESCRIPTION	QUANTITY	
			LA-1	SW-2
1	-	WIRE TAP, BURNDY #UCG32R	3	-
2	-	WOODEN CROSSARM W/BRACING	1	-
3	-	LIGHTNING ARRESTER, SIEMENS #3EK7-180-3AD4-M11-Q51-P12	3	-
4	-	TAP WIRE, HENDRIX #TAP02CUSTR	AS REQ'D	-
5	-	TERMINATOR, 3M #7694-S-4	-	3
6	-	3 POLE, GANG OPERATED LOAD BREAK SWITCH WITH VERTICAL SWITCH ORIENTATION AND LOCKABLE HANDLE, HUBBELL #AR123SS	-	1
7		NEMA TWO HOLE COMPRESSION LUG		3

NOTES:

1. PART NUMBERS FOR ASSEMBLIES , HARDWARE, AND OTHER COMPONENTS SPECIFIED HEREIN ARE FOR REFERENCE PURPOSES ONLY. APPROVED EQUAL PRODUCTS ARE PERMITTED UNLESS OTHERWISE NOTED.

ADDENDUM NO. 2

REV.	DATE	REVISION DESCRIPTION	SHEET NO.
1	03/08/2019	ADD BILL OF MATERIALS, EDIT CALLOUTS	15.072.A2

THE INFORMATION, INCLUDING ESTIMATED QUANTITIES OF WORK, SHOWN ON THESE SHEETS IS BASED ON LIMITED INVESTIGATIONS BY THE STATE AND IS IN NO WAY WARRANTED TO INDICATE THE CONDITIONS OF ACTUAL QUANTITIES OF WORK WHICH WILL BE REQUIRED.

Plotted Date: 3/13/2019

DESIGNER/DRAFTER: BD
CHECKED BY: BC
NOT TO SCALE

STATE OF CONNECTICUT
DEPARTMENT OF TRANSPORTATION

Filename: ...\TRP-404_A2_CNS_SHEET_0300-0138.dgn

SIGNATURE/BLOCK:
STV Incorporated
185 Plains Road
Suite 208E
Milford, CT 06461

PROJECT TITLE:
NEW HAVEN RAIL YARD FACILITIES IMPROVEMENTS WEST END YARD

TOWN: **NEW HAVEN**

DRAWING TITLE: **ASSEMBLY DETAILS SHEET 4 OF 4**

PROJECT NO. **0300-0138**
DRAWING NO. **TRP-404**
SHEET NO. **15.072.A2**