03 - HIGHWAYS
INDEX OF DRAWINGS

DRAWING NUMBER	DRAWING TITLE	DRAWING NUMBER	DRAWING TITLE
HWY-01	INDEX OF DRAWINGS		
TYP-01	TYPICAL SECTIONS		
PLN-01	ROADWAY PLAN		
DGS-01	CATCH BASIN AND DROP INLET		
DGS-02	CATCH BASIN TOPS TYPE "C" & "C-L"		
DGS-03	CATCH BASIN FRAMES AND GRATES		
PRO-01	PROFILE ROUTE 34		
XSC-01	CROSS SECTIONS ROUTE 34 WB		
XSC-02	CROSS SECTIONS ROUTE 34 WB		
XSC-03	CROSS SECTIONS ROUTE 34 WB		
XSC-04	CROSS SECTIONS ROUTE 34 EB		
XSC-05	CROSS SECTIONS ROUTE 34 EB		
XSC-06	CROSS SECTIONS ROUTE 34 EB		

DESIGNED BY:

Stantec

STANTEC CONSULTING SERVICES INC.
55 CHURCH STREET, SUITE 601
NEW HAVEN, CT 06510

STATE OF CONNECTICUT
ANDREW M. LESSARD
30392
LICENSED
PROFESSIONAL ENGINEER

Andrew Lessard
2018.11.28
14:57:43-05'00'

REV.	DATE	REVISION DESCRIPTION	SHEET NO.
-	-	-	-
-	-	-	-
-	-	-	-
-	-	-	-
-	-	-	-
-	-	-	-

THE INFORMATION, INCLUDING ESTIMATED QUANTITIES OF WORK, SHOWN ON THESE SHEETS IS BASED ON LIMITED INVESTIGATIONS BY THE STATE AND IS IN NO WAY WARRANTED TO INDICATE THE CONDITIONS OF ACTUAL QUANTITIES OF WORK WHICH WILL BE REQUIRED.

Plotted Date: 11/28/2018

DESIGNER/DRAFTER: JJF
CHECKED BY: AML

STATE OF CONNECTICUT
DEPARTMENT OF TRANSPORTATION

Filename: ...\HWY-01 INDEX OF DRAWINGS.dgn

SIGNATURE/BLOCK:

STATE OF CONNECTICUT
ANDREW M. LESSARD
30392
LICENSED
PROFESSIONAL ENGINEER

Stantec Consulting Services Inc.
55 Church Street
Suite 601
New Haven, CT 06510

PROJECT TITLE:
REHABILITATION OF BRIDGE NO. 00948, ROUTE 34 OVER WEPAWAUG RIVER

TOWN: **ORANGE**

DRAWING TITLE: **INDEX OF DRAWINGS**

PROJECT NO. **106-127**
DRAWING NO. **HWY-01**
SHEET NO. **03.01**

TYPICAL SECTIONS

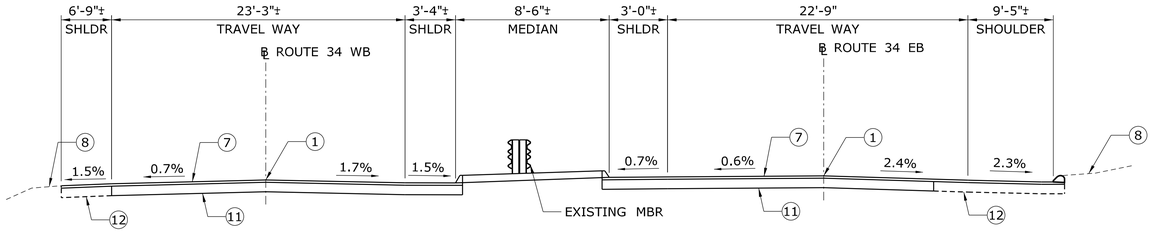

EXISTING ROADWAY SECTION BEGIN PROJ. NO. 106-127
ROUTE 34 WB STA. 02+35.00; ROUTE 34 EB STA. 22+50.00
MATCH EXISTING
NOT TO SCALE

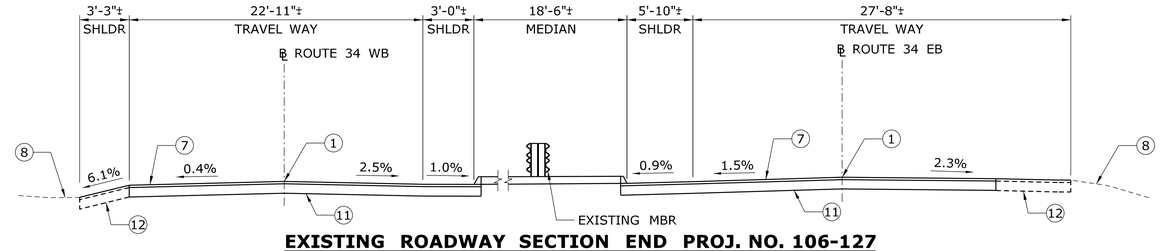

EXISTING ROADWAY SECTION END PROJ. NO. 106-127
ROUTE 34 WB STA. 07+33.60; ROUTE 34 EB STA. 27+28.93
MATCH EXISTING
NOT TO SCALE

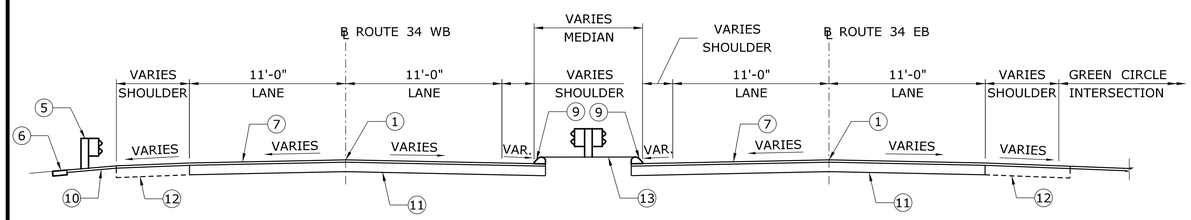

NOTE: ROADWAY CROSS SLOPE VARIES TO MATCH EXISTING ROADWAY

PROPOSED ROADWAY SECTION
ROUTE 34 WB STA. 02+35.00 TO STA. 03+75.52
ROUTE 34 EB STA. 22+50.00 TO STA. 23+75.25
NOT TO SCALE

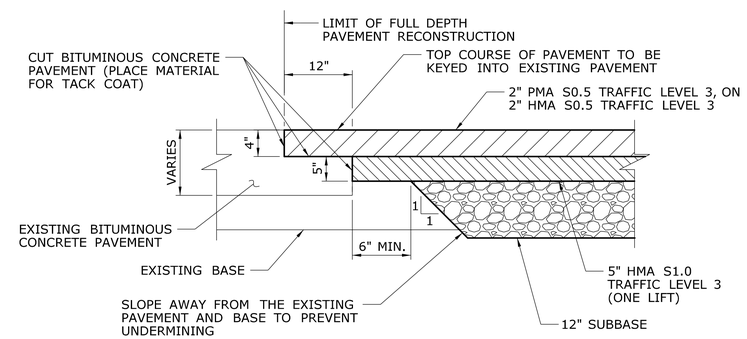

TRANSVERSE PAVEMENT TRANSITION DETAIL FOR PLACEMENT AT EXISTING BITUMINOUS CONCRETE PAVEMENT
NOT TO SCALE

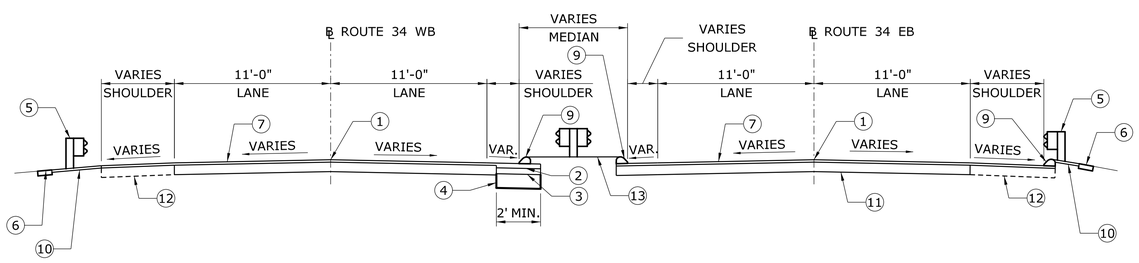

PROPOSED ROADWAY SECTION
ROUTE 34 WB STA. 03+75.52 TO STA. 04+91.90
ROUTE 34 EB STA. 23+75.25 TO STA. 24+92.21
AND
ROUTE 34 WB STA. 05+25.89 TO STA. 07+33.60
ROUTE 34 EB STA. 25+26.78 TO STA. 27+28.93
NOT TO SCALE

ROUTE 34 WB STA. 04+91.90 TO STA. 05+25.89
ROUTE 34 EB STA. 24+92.21 TO STA. 25+26.78
SEE STRUCTURE SHEETS

LEGEND

1. POINT OF APPLICATION OF GRADE
2. *2" PMA S0.5 TRAFFIC LEVEL 3, ON 2" HMA S0.5 TRAFFIC LEVEL 3
3. 5" HMA S1.0 TRAFFIC LEVEL 3 (ONE LIFT)
4. 12" SUBBASE
5. MBR TYPE R-B 350 (AS SHOWN ON PLANS)
6. 4" TOPSOIL AND TURF ESTABLISHMENT (2 FT WIDE)
7. FINE MILL 3" *PAVE 2" PMA S0.5 TRAFFIC LEVEL 3, ON 1" HMA S0.25 TRAFFIC LEVEL 2
8. EXISTING GRADE
9. BITUMINOUS CONCRETE PARK CURBING
10. PROCESSED AGGREGATE
11. EXISTING CONCRETE PAVEMENT
12. EXISTING GRAVEL FILL
13. BITUMINOUS CONCRETE MEDIAN (2" HMA S0.375 TRAFFIC LEVEL 2 ON 8" GRANULAR FILL)

* THE FINAL COURSE OF 2" PMA S0.5 SHALL BE PAVED IN CONJUNCTION WITH THE PROPOSED 3" MILL AND OVERLAY AND BRIDGE OVERLAY.

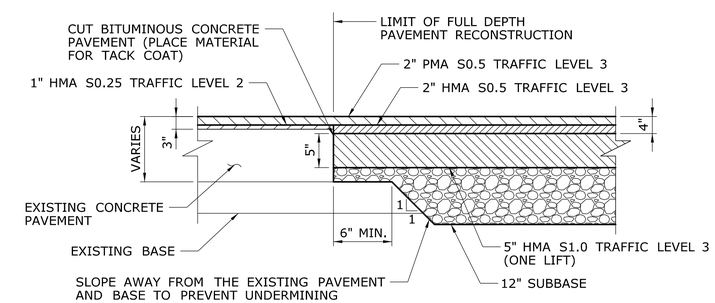

LONGITUDINAL PAVEMENT TRANSITION DETAIL FOR PLACEMENT AT EXISTING CONCRETE PAVEMENT
NOT TO SCALE

NOTE: THERE SHALL BE NO DIRECT PAYMENT FOR THE WORK ASSOCIATED WITH KEYING THE NEW PAVEMENT INTO THE EXISTING PAVEMENT, INCLUDING THE LOWER SAWCUT(S) AND PLACEMENT OF MATERIAL FOR TACK COAT. THE COST SHALL BE INCLUDED IN THE OTHER BID ITEMS. ALL WORK SHALL MEET THE APPROVAL OF THE ENGINEER.

REV.	DATE	REVISION DESCRIPTION	SHEET NO.

THE INFORMATION, INCLUDING ESTIMATED QUANTITIES OF WORK, SHOWN ON THESE SHEETS IS BASED ON LIMITED INVESTIGATIONS BY THE STATE AND IS IN NO WAY WARRANTED TO INDICATE THE CONDITIONS OF ACTUAL QUANTITIES OF WORK WHICH WILL BE REQUIRED.

Plotted Date: 11/28/2018

DESIGNER/DRAFTER: JJF
CHECKED BY: AML
SCALE AS NOTED

STATE OF CONNECTICUT
DEPARTMENT OF TRANSPORTATION

Filename: ...\TYP-01_TYPICAL SECTIONS.dgn

SIGNATURE/BLOCK:
Stantec Consulting Services Inc.
55 Church Street
Suite 601
New Haven, CT 06510

PROJECT TITLE:
REHABILITATION OF BRIDGE NO. 00948, ROUTE 34 OVER WEPAWAUG RIVER

TOWN: **ORANGE**

DRAWING TITLE: **TYPICAL SECTIONS**

PROJECT NO. **106-127**
DRAWING NO. **TYP-01**
SHEET NO. **03.02**

UTILITY TEST PIT DATA

WATER (SOUTH CENTRAL CONNECTICUT REGIONAL WATER AUTHORITY)								
TEST PIT #	BASELINE STATION	BASELINE OFFSET	NORTHING	EASTING	GROUND EL. (FT)	TOP OF PIPE EL. (FT)	UTILITY DESCRIPTION	RELOCATION ANTICIPATED
W-1A	STA. 05+25.84	10.33' LT	171543.87	522899.46	186.02	182.96	16" CIP*	NO
W-1B	STA. 04+93.17	10.76' LT	171564.38	522874.29	186.18	183.97	24" STL SLV*	NO
W-1C	STA. 04+89.52	10.68' LT	171566.60	522871.42	186.21	184.03	24" STL SLV*	NO
TELECOMMUNICATIONS (LEVEL 3 COMMUNICATIONS)								
TEST PIT #	BASELINE STATION	BASELINE OFFSET	NORTHING	EASTING	GROUND EL. (FT)	TOP OF CONCRETE ENCASEMENT EL.(FT)	UTILITY DESCRIPTION	RELOCATION ANTICIPATED
C-1	STA. 25+10.11	2.75' RT	171517.23	522856.62	186.84	186.30	CONCRETE	NO
GAS (SOUTHERN CONNECTICUT GAS COMPANY)								
TEST PIT #	BASELINE STATION	BASELINE OFFSET	NORTHING	EASTING	GROUND EL. (FT)	TOP OF PIPE EL. (FT)	UTILITY DESCRIPTION	RELOCATION ANTICIPATED
G-1	STA. 25+10.59	14.50' RT	171507.92	522849.44	186.63	183.79	6" PLASTIC*	YES

*NOTES:
1. THE WATER UTILITY IS A 16" CIP INSIDE A 24" STEEL SLEEVE.
2. EXISTING 6" GAS MAIN SHALL BE ABANDONED AND A NEW 6" MAIN IN 10" SLEEVE SHALL BE INSTALLED FOR THE FULL LENGTH OF PROPOSED CONCRETE SLAB (BY OTHERS).

CURVE TABLE

LINE ID	RADIUS	LENGTH	CHORD	START POINT	END POINT
C1	1725.00'	302.09'	S53° 29'57.28"E	(522808.68, 171605.81)	(523051.20, 171426.34)
C2	2690.83'	127.51'	S50° 35'44.92"E	(522829.72, 171543.70)	(522928.24, 171462.77)
C3	2085.11'	298.77'	S56° 03'21.73"E	(522975.49, 171425.79)	(523223.13, 171259.11)

LINE TABLE

LINE ID	LENGTH	DIRECTION	START POINT	END POINT
L1	372.49	S49° 14'17.80"E	(522547.59, 171786.91)	(522829.72, 171543.70)
L2	60.00	S51° 57'04.10"E	(522928.24, 171462.77)	(522975.49, 171425.79)
L3	91.23	S60° 10'00.32"E	(523223.13, 171259.11)	(523302.27, 171213.72)
L4	135.06	S49° 32'29.24"E	(522570.38, 171813.43)	(522673.14, 171725.79)
L5	181.02	S48° 28'56.51"E	(522673.14, 171725.79)	(522808.68, 171605.81)
L6	331.70	S58° 30'58.05"E	(523051.20, 171426.34)	(523334.07, 171253.11)

LEGEND

- FINE MILL ROAD CONSTRUCTION
- FULL DEPTH ROAD CONSTRUCTION
- 100YR — FEMA FLOODWAY LIMIT/ 100-YEAR FLOOD ELEVATION
- STATE/FEDERAL WETLANDS LIMIT
- OHW — ORDINARY HIGH WATER

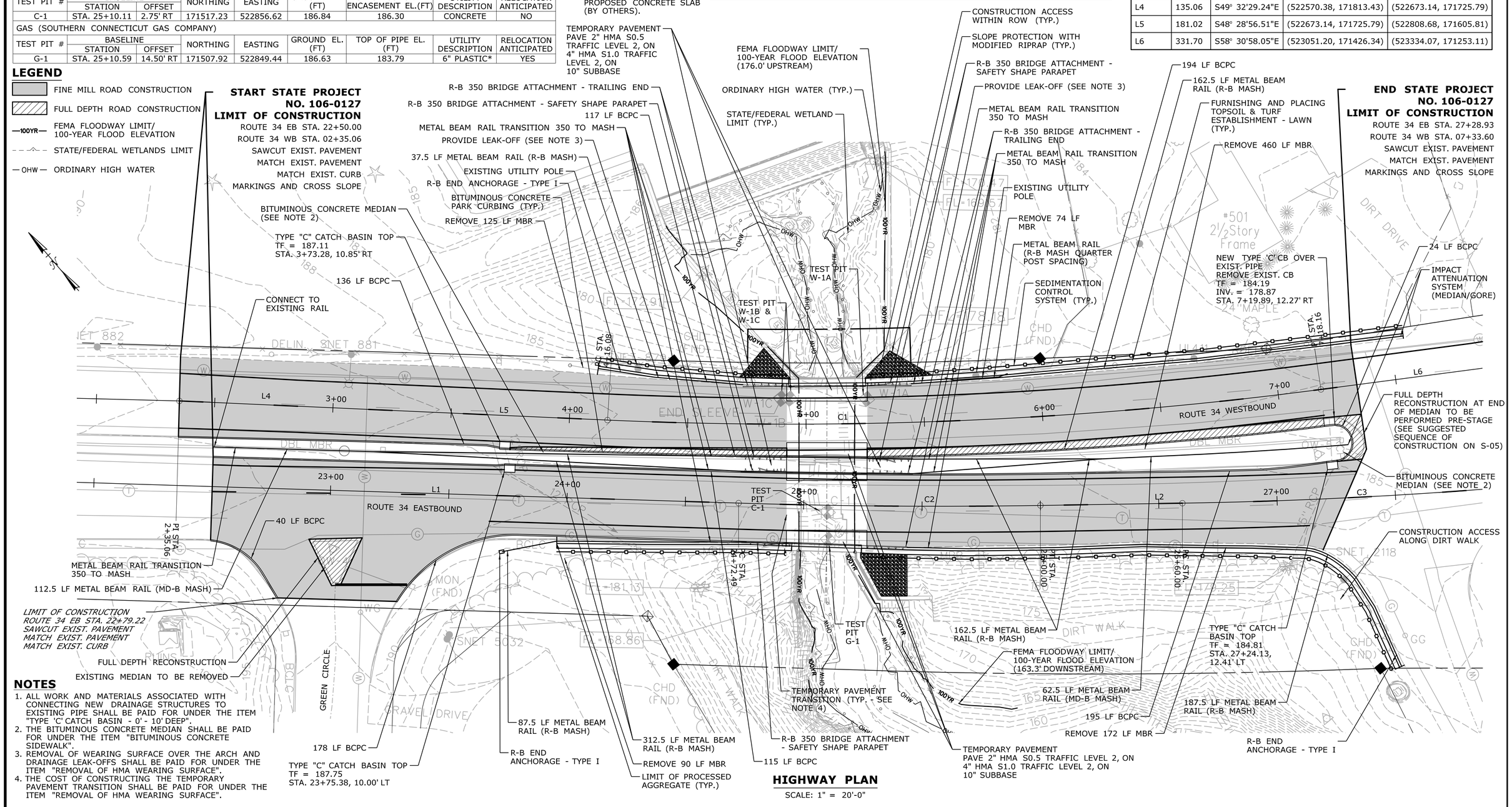

NOTES

1. ALL WORK AND MATERIALS ASSOCIATED WITH CONNECTING NEW DRAINAGE STRUCTURES TO EXISTING PIPE SHALL BE PAID FOR UNDER THE ITEM "TYPE 'C' CATCH BASIN - 0' - 10' DEEP".
2. THE BITUMINOUS CONCRETE MEDIAN SHALL BE PAID FOR UNDER THE ITEM "BITUMINOUS CONCRETE SIDEWALK".
3. REMOVAL OF WEARING SURFACE OVER THE ARCH AND DRAINAGE LEAK-OFFS SHALL BE PAID FOR UNDER THE ITEM "REMOVAL OF HMA WEARING SURFACE".
4. THE COST OF CONSTRUCTING THE TEMPORARY PAVEMENT TRANSITION SHALL BE PAID FOR UNDER THE ITEM "REMOVAL OF HMA WEARING SURFACE".

HIGHWAY PLAN

SCALE: 1" = 20'-0"

REV.	DATE	REVISION DESCRIPTION	SHEET NO.
-	-	-	-
-	-	-	-
-	-	-	-
-	-	-	-
-	-	-	-
-	-	-	-

THE INFORMATION, INCLUDING ESTIMATED QUANTITIES OF WORK, SHOWN ON THESE SHEETS IS BASED ON LIMITED INVESTIGATIONS BY THE STATE AND IS IN NO WAY WARRANTED TO INDICATE THE CONDITIONS OF ACTUAL QUANTITIES OF WORK WHICH WILL BE REQUIRED.

Plotted Date: 11/28/2018

DESIGNER/DRAFTER: JJF
CHECKED BY: AML
SCALE AS NOTED

STATE OF CONNECTICUT
DEPARTMENT OF TRANSPORTATION

Filename: ...\PLN-01 HIGHWAY PLAN.dgn

SIGNATURE/ BLOCK:
Stantec Consulting Services Inc.
55 Church Street
Suite 601
New Haven, CT 06510

PROJECT TITLE:
REHABILITATION OF BRIDGE NO. 00948, ROUTE 34 OVER WEPAWAUG RIVER

TOWN: ORANGE

DRAWING TITLE: ROADWAY PLAN

PROJECT NO. 106-127
DRAWING NO. PLN-01
SHEET NO. 03.03

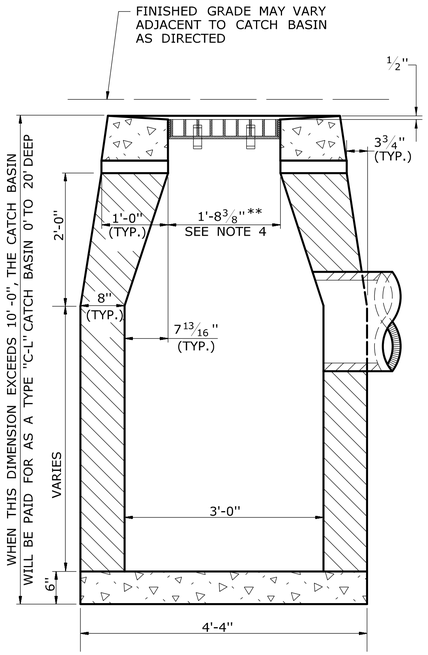

SECTION B

TYPE "C-L" CATCH BASIN

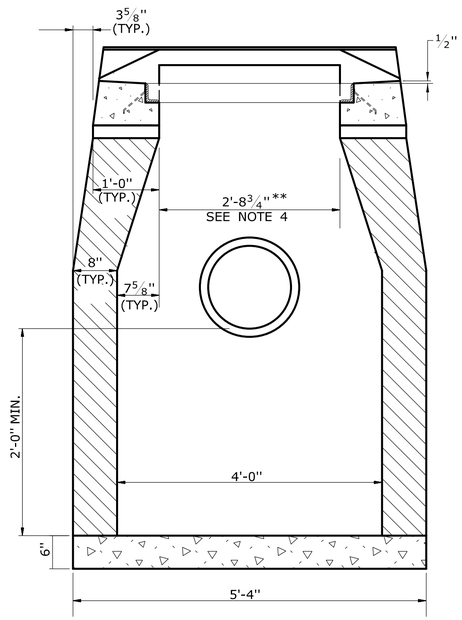

SECTION A

TYPE "C" & "C-L" CATCH BASIN (TYPE "C" TOP SHOWN)

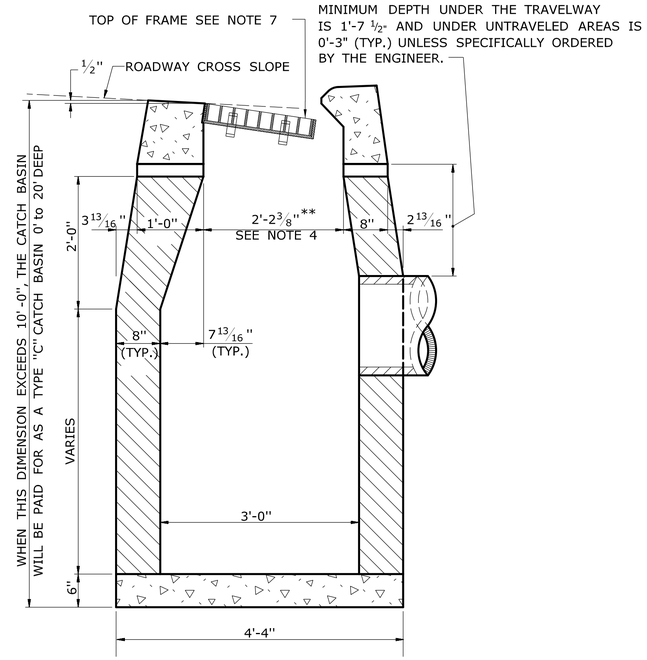

SECTION B

TYPE "C" CATCH BASIN

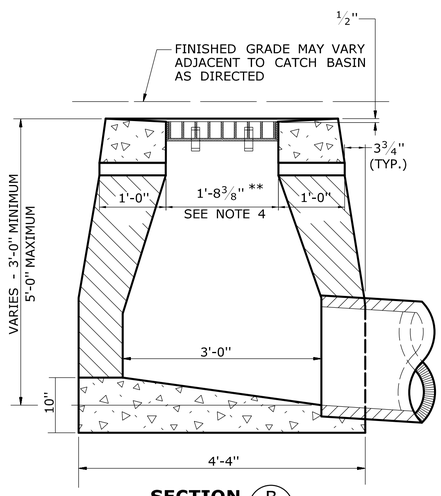

SECTION B

TYPE "C-L" DROP INLET

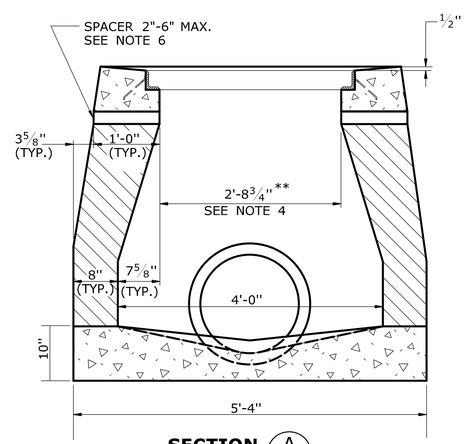

SECTION A

TYPE "C" & "C-L" DROP INLET (TYPE "C-L" TOP SHOWN)

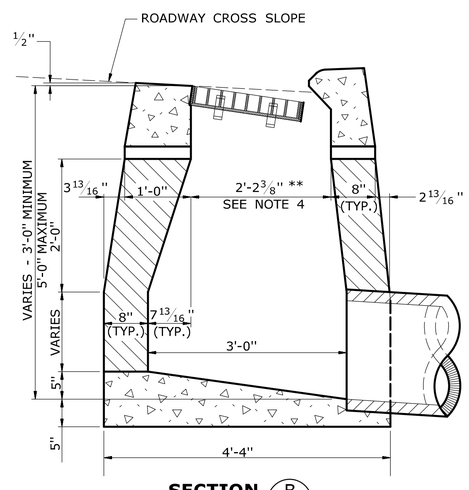

SECTION B

TYPE "C" DROP INLET

GENERAL NOTES:

1. FOR CATCH BASIN TOPS, SEE DRAWING NO. DGS-02.
2. ALL FACES OF STRUCTURES IN CONTACT WITH CONCRETE PAVEMENT SHALL BE COVERED WITH A LAYER OF TAR PAPER OR APPROVED EQUAL.
3. USE 6'-0" ON UPGRADE SIDE (SEE PLAN VIEW) OF CONTINUOUS GRADE AND 1'-0" ON DOWNGRADE SIDE OF CONTINUOUS GRADE OR AS DIRECTED BY THE ENGINEER.
4. IF MASONRY UNITS ARE REQUIRED, THE BASIN SHALL BE CONSTRUCTED IN CONFORMANCE WITH THE DIMENSIONS SHOWN. CORBELLING SHALL BE PERMITTED TO A MAXIMUM OF 3". NO PROJECTION SHALL EXTEND INSIDE THE LIMITS FOR THE CATCH BASIN OPENINGS SHOWN IN THE SECTION VIEWS **.
5. WALL THICKNESS OF ALL CATCH BASINS OVER 10' DEEP SHALL BE INCREASED TO 12" THICK. INSIDE DIMENSION SHALL REMAIN THE SAME. 12" THICKNESS SHALL START AFTER THE FIRST 10'.
6. SPACERS CAN BE EITHER CONCRETE MASONRY UNIT OR PRECAST WITH THE REQUIRED REINFORCING (RECOMMENDED BY THE MANUFACTURER) AS NEEDED TO PROVIDE THE PROPER GRADE SHOWN ON THE PLANS.
7. TOP OF FRAME ELEVATION SHALL BE MEASURED IN THE CENTER OF GRATE AT GUTTER LINE.

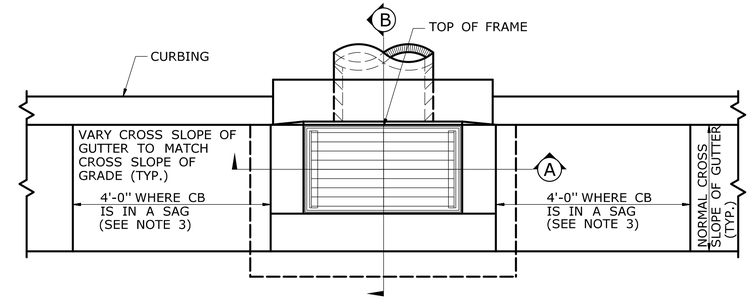

PLAN

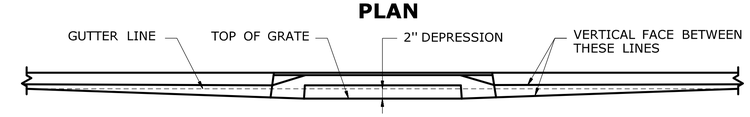

CATCH BASINS IN A LINE WITH 4" CONCRETE PARK CURBING OR 4" BITUMINOUS CONCRETE PARK CURBING

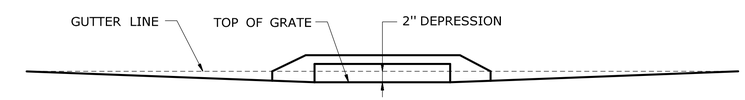

CATCH BASINS WHERE NO CURBING OF ANY TYPE EXISTS OR IS PROPOSED

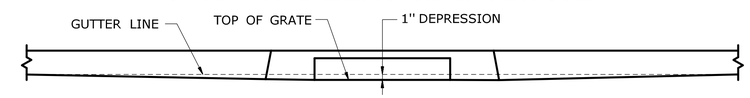

CATCH BASINS IN A LINE WITH 6" CONCRETE CURBING OR 6" STONE CURBING

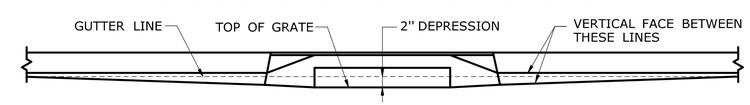

CATCH BASINS IN A LINE WITH 6" BITUMINOUS CONCRETE LIP CURBING (MACHINE FORMED)

DETAILS OF DEPRESSED GUTTER STRIP FOR TYPE "C" CATCH BASIN

REV.	DATE	REVISION DESCRIPTION	SHEET NO.

THE INFORMATION, INCLUDING ESTIMATED QUANTITIES OF WORK, SHOWN ON THESE SHEETS IS BASED ON LIMITED INVESTIGATIONS BY THE STATE AND IS IN NO WAY WARRANTED TO INDICATE THE CONDITIONS OF ACTUAL QUANTITIES OF WORK WHICH WILL BE REQUIRED.

Plotted Date: 11/28/2018

DESIGNER/DRAFTER: JRA
CHECKED BY: AML
SCALE AS NOTED

STATE OF CONNECTICUT
DEPARTMENT OF TRANSPORTATION

Filename: ...\DGS-01_CATCH BASIN.dgn

SIGNATURE/BLOCK:
Stantec Consulting Services Inc.
55 Church Street
Suite 601
New Haven, CT 06510

PROJECT TITLE:
REHABILITATION OF BRIDGE NO. 00948, ROUTE 34 OVER WEPAWAUG RIVER

TOWN: **ORANGE**

DRAWING TITLE: **CATCH BASIN AND DROP INLET**

PROJECT NO. 106-127
DRAWING NO. DGS-01
SHEET NO. 03.04

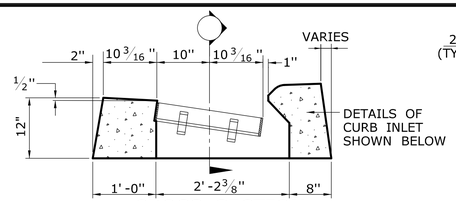

CROSS SECTION

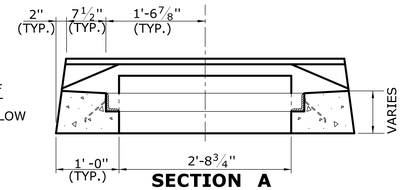

SECTION A

TYPE "C" CATCH BASIN TOP

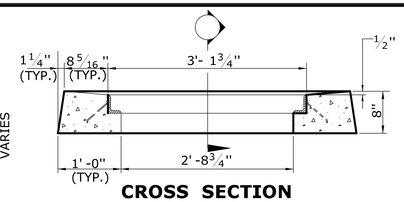

CROSS SECTION

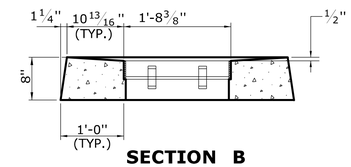

SECTION B

TYPE "C-L" CATCH BASIN TOP

GENERAL NOTES:

1. FOR DETAILS OF FRAMES AND GRATES, SEE DRAWING NO. DGS-03.
2. ALL BARS SHALL HAVE A MINIMUM 2" COVER.

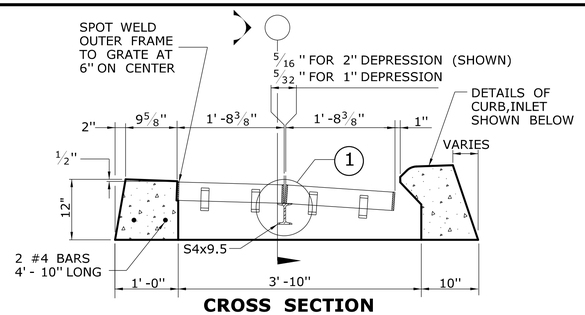

CROSS SECTION

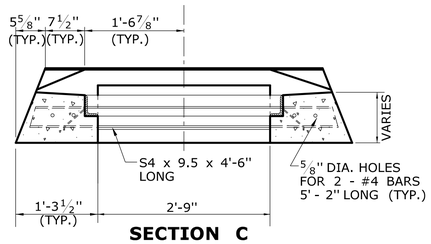

SECTION C

TYPE "C" CATCH BASIN DOUBLE GRATE - TYPE I TOP

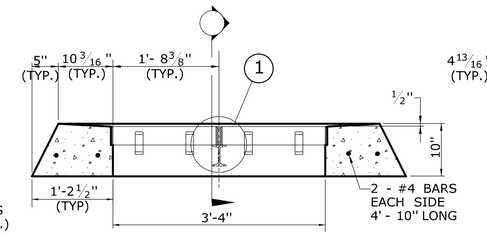

CROSS SECTION

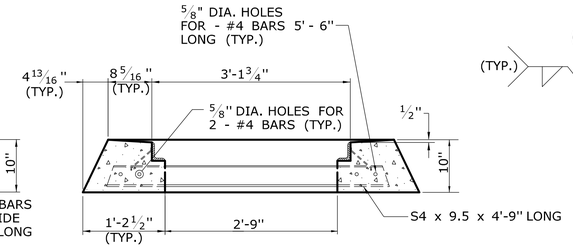

SECTION D

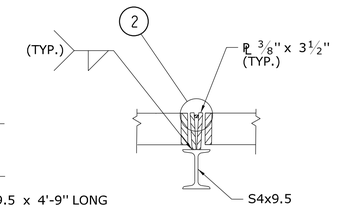

DETAIL "1"

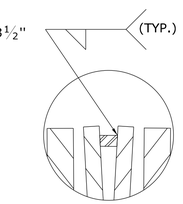

DETAIL "2"

TYPE "C-L" CATCH BASIN DOUBLE GRATE - TYPE I TOP

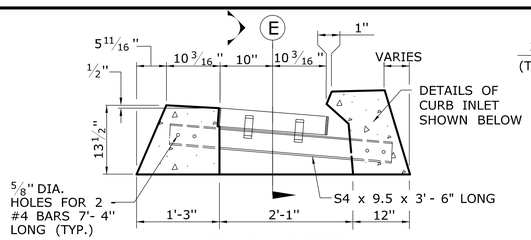

CROSS SECTION

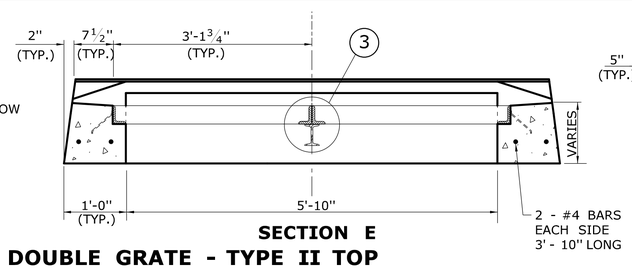

SECTION E

TYPE "C" CATCH BASIN DOUBLE GRATE - TYPE II TOP

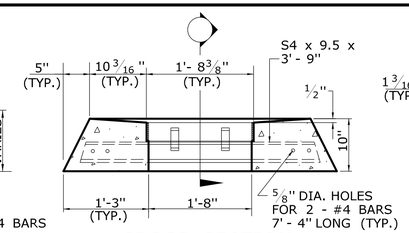

CROSS SECTION

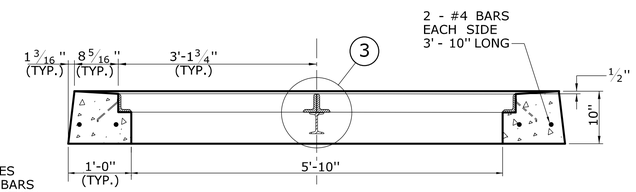

SECTION F

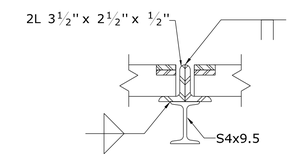

DETAIL "3"

TYPE "C-L" CATCH BASIN DOUBLE GRATE - TYPE II TOP

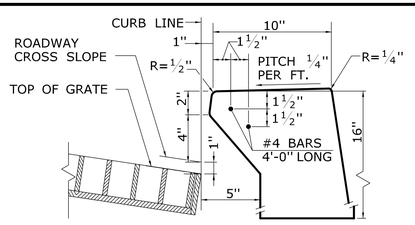

INLET WITH 6" CONCRETE OR STONE CURBING FOR TYPE "C" CB

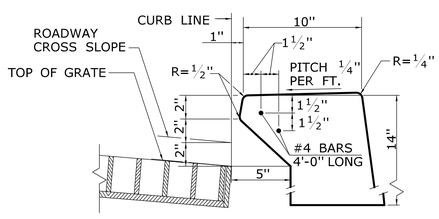

INLET WITH NO CURBING (PLAIN TYPE) FOR TYPE "C" CB

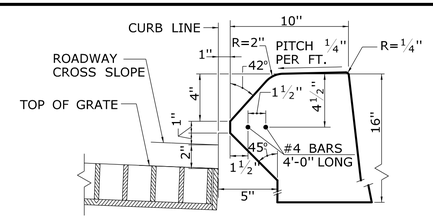

INLET WITH 6" BITUMINOUS CONCRETE LIP CURBING FOR TYPE "C" CB

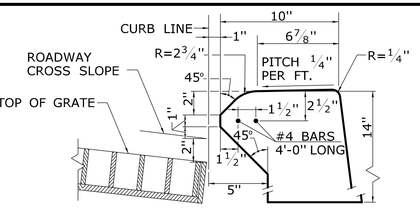

INLET WITH 4" CONCRETE PARK CURBING FOR TYPE "C" CB

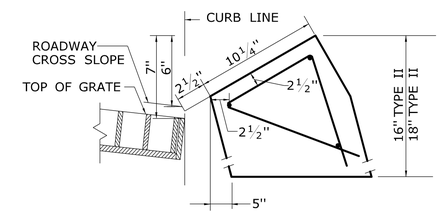

INLET WITH GRANITE SLOPE CURB FOR TYPE "C" CB

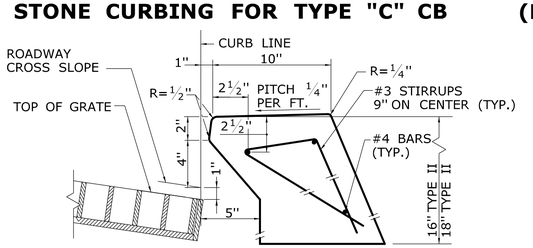

INLET WITH 6" CONCRETE OR STONE CURBING FOR TYPE "C" CB DOUBLE GRATE TYPE I & II

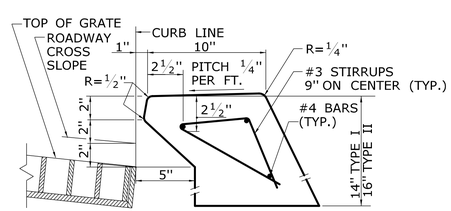

INLET WITH NO CURBING (PLAIN TYPE) FOR TYPE "C" CB DOUBLE GRATE TYPE I & II

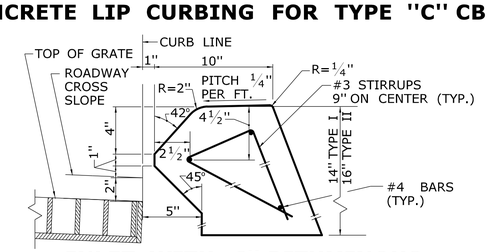

INLET WITH 6" BITUMINOUS CONCRETE LIP CURBING FOR TYPE "C" CB DOUBLE GRATE TYPE I & II

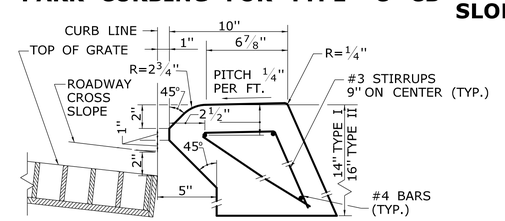

INLET WITH 4" CONCRETE PARK CURBING FOR TYPE "C" CB DOUBLE GRATE TYPE I & II

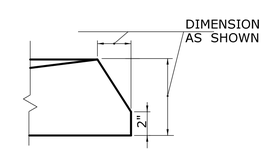

ALTERNATE CONSTRUCTION OF TYPE II TOP

REV.	DATE	REVISION DESCRIPTION	SHEET NO.

THE INFORMATION, INCLUDING ESTIMATED QUANTITIES OF WORK, SHOWN ON THESE SHEETS IS BASED ON LIMITED INVESTIGATIONS BY THE STATE AND IS IN NO WAY WARRANTED TO INDICATE THE CONDITIONS OF ACTUAL QUANTITIES OF WORK WHICH WILL BE REQUIRED.

Plotted Date: 11/28/2018

DESIGNER/DRAFTER: JRA
CHECKED BY: AML
SCALE AS NOTED

STATE OF CONNECTICUT
DEPARTMENT OF TRANSPORTATION

Filename: ...\DGS-02_CATCH BASIN TOPS.dgn

SIGNATURE/BLOCK:
Stantec Consulting Services Inc.
55 Church Street
Suite 601
New Haven, CT 06510

PROJECT TITLE:
REHABILITATION OF BRIDGE NO. 00948, ROUTE 34 OVER WEPAWAUG RIVER

TOWN: ORANGE

DRAWING TITLE:
CATCH BASIN TOPS TYPE "C" & "C-L"

PROJECT NO. 106-127
DRAWING NO. DGS-02
SHEET NO. 03.05

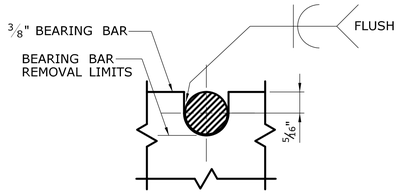

NOTE:
5/8" DIA. ROUND BAR SHALL CONTACT BEARING BAR AT BOTTOM AND BE FLUSH AT TOP.

ROUND BAR ATTACHMENT
CATCH BASIN GRATE TYPE A

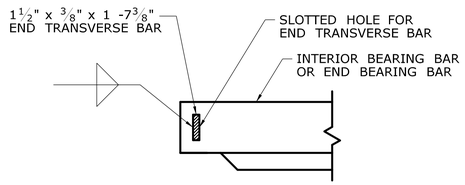

END TRANSVERSE BAR ATTACHMENT
CATCH BASIN GRATE TYPE A AND B

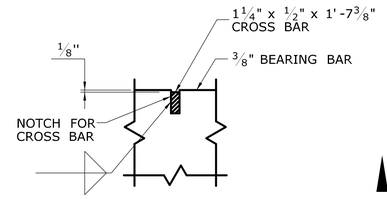

CROSS BAR ATTACHMENT
CATCH BASIN GRATE TYPE B

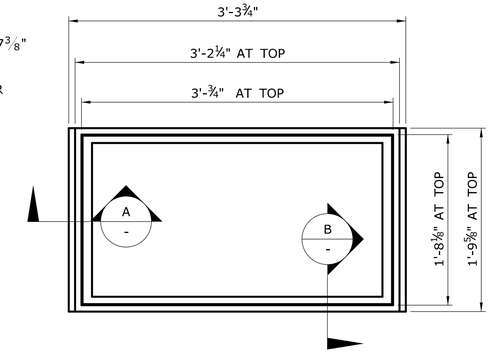

PLAN

GENERAL NOTES:

1. STEEL OR CAST IRON SHALL BE USED FOR FRAMES. STEEL SHALL BE USED FOR TYPE "A" AND "B" GRATES.
2. TYPE "A" GRATES SHALL BE USED ON ALL ROADWAYS WHERE BICYCLE TRAFFIC IS ALLOWED OR ON HEAVY DUTY LOCK DOWN TOPS AS DIRECTED BY THE ENGINEER.
3. TYPE "B" GRATES SHALL BE USED ON ALL LIMITED ACCESS HIGHWAYS, RAMPS AND WHERE BICYCLE TRAFFIC IS NOT ALLOWED OR AS DIRECTED BY THE ENGINEER.
4. DO NOT GALVANIZE CAST IRON FRAMES.
5. DIMENSIONAL TOLERANCES SHALL BE ± 1/16 INCH.
6. ALL STEEL BARS SHALL BE WELDED AT ALL INTERSECTIONS.

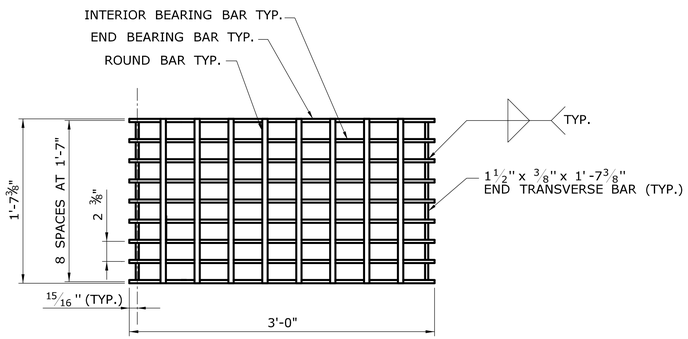

PLAN

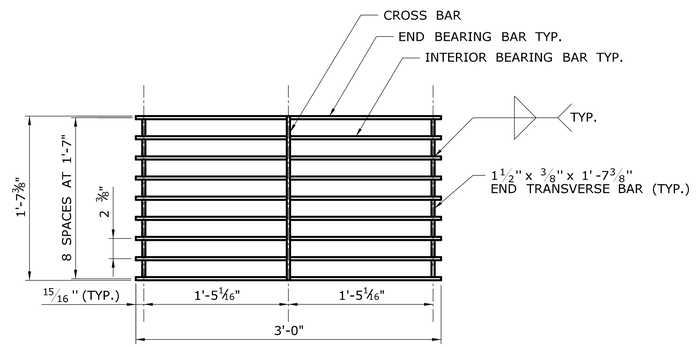

PLAN

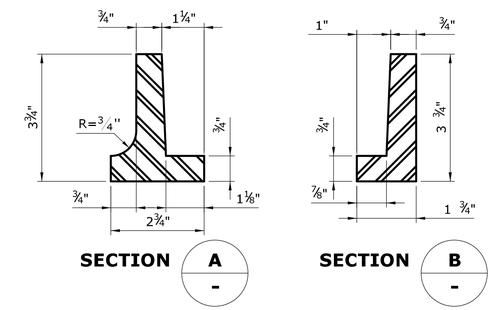

SECTION A -
SECTION B -

CAST IRON FRAME ALTERNATE

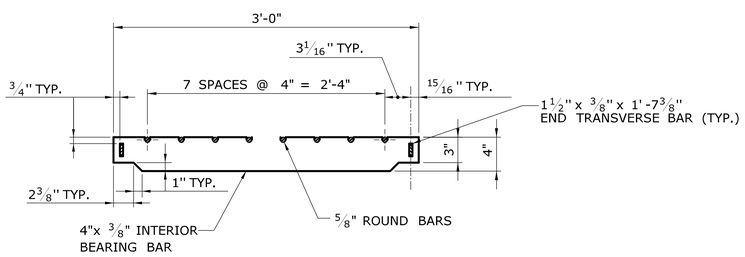

ELEVATION- INTERIOR BEARING BAR

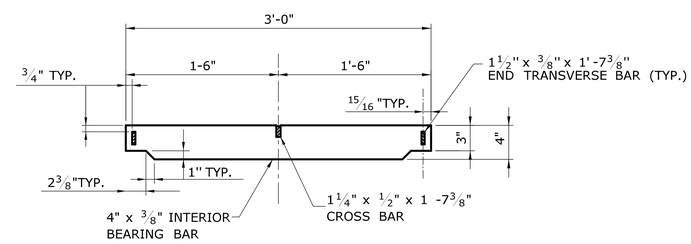

ELEVATION- INTERIOR BEARING BAR

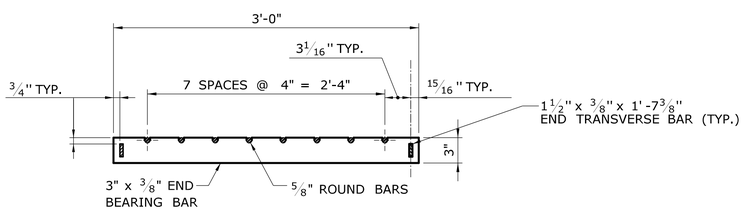

ELEVATION- END BEARING BAR
CATCH BASIN GRATE TYPE A

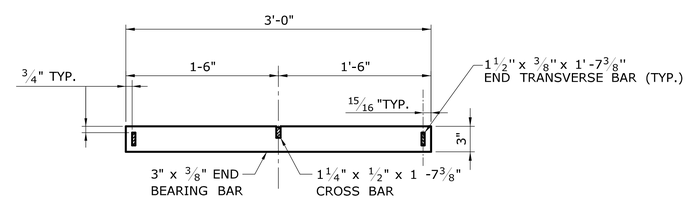

ELEVATION- END BEARING BAR
CATCH BASIN GRATE TYPE B

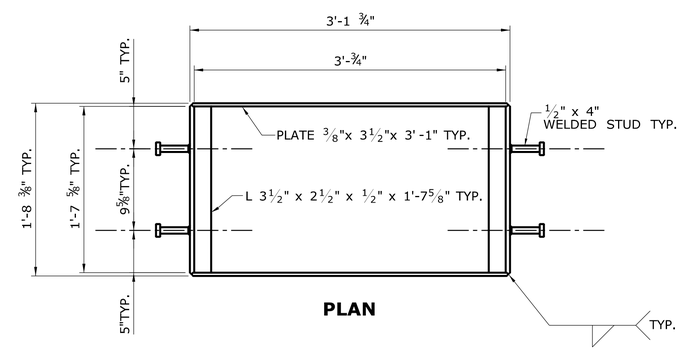

PLAN

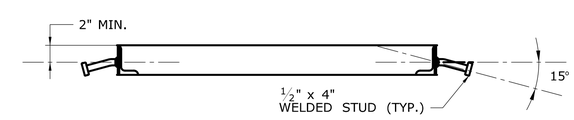

WELDED STUD ANCHOR DETAILS
STEEL FRAME

REV.	DATE	REVISION DESCRIPTION	SHEET NO.

THE INFORMATION, INCLUDING ESTIMATED QUANTITIES OF WORK, SHOWN ON THESE SHEETS IS BASED ON LIMITED INVESTIGATIONS BY THE STATE AND IS IN NO WAY WARRANTED TO INDICATE THE CONDITIONS OF ACTUAL QUANTITIES OF WORK WHICH WILL BE REQUIRED.

Plotted Date: 11/28/2018

DESIGNER/DRAFTER: JRA
CHECKED BY: AML
SCALE AS NOTED

STATE OF CONNECTICUT
DEPARTMENT OF TRANSPORTATION

Filename: ...\DGS-03_CATCH BASIN FRAMES AND GRATES.dgn

SIGNATURE/BLOCK:
Stantec Consulting Services Inc.
55 Church Street
Suite 601
New Haven, CT 06510

PROJECT TITLE:
REHABILITATION OF BRIDGE NO. 00948, ROUTE 34 OVER WEPAWAUG RIVER

TOWN: **ORANGE**

DRAWING TITLE: **CATCH BASIN FRAMES AND GRATES**

PROJECT NO. 106-127
DRAWING NO. DGS-03
SHEET NO. 03.06

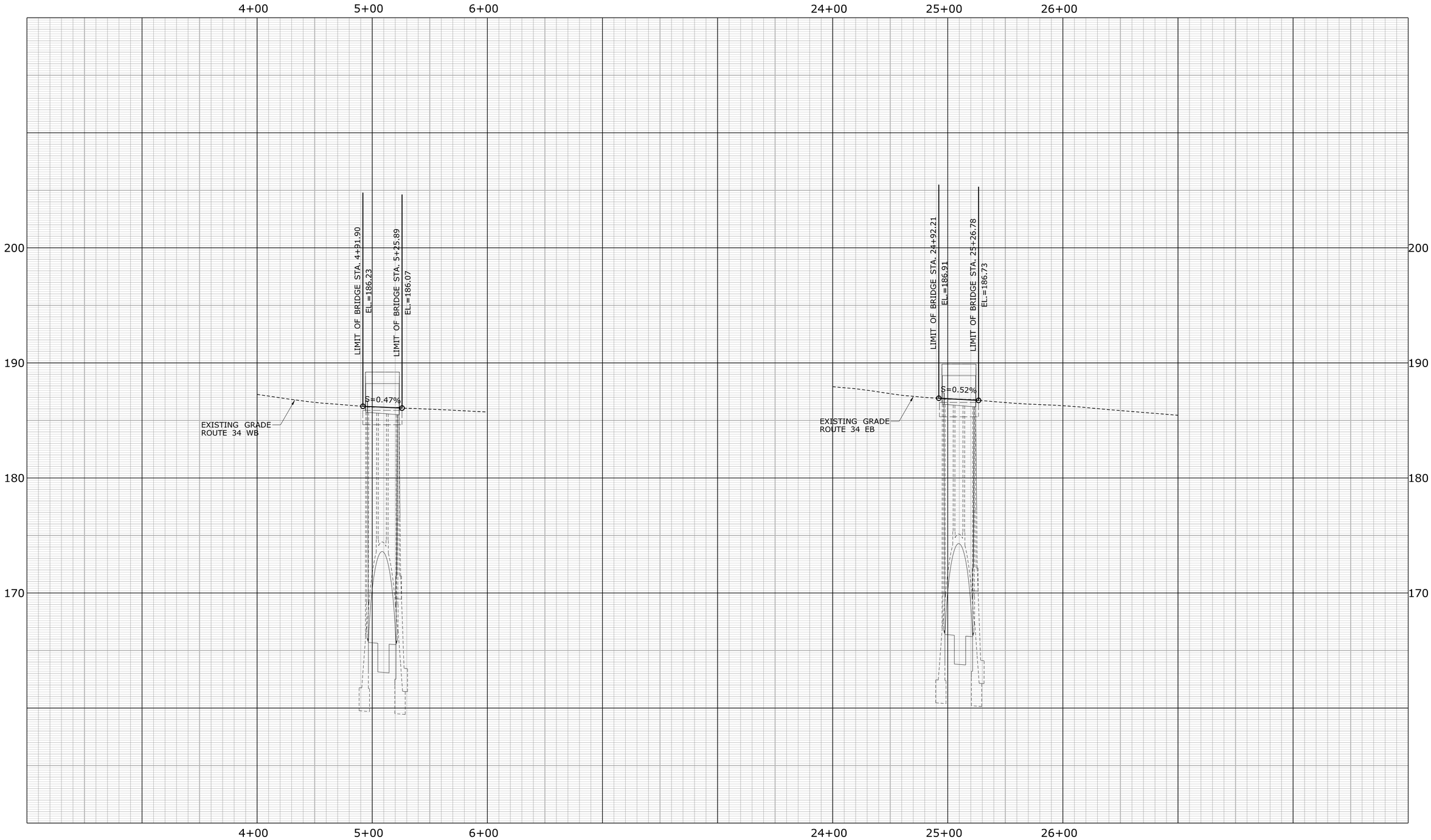

REV.	DATE	REVISION DESCRIPTION	SHEET NO.
-	-	-	-
-	-	-	-
-	-	-	-
-	-	-	-
-	-	-	-
-	-	-	-

THE INFORMATION, INCLUDING ESTIMATED QUANTITIES OF WORK, SHOWN ON THESE SHEETS IS BASED ON LIMITED INVESTIGATIONS BY THE STATE AND IS IN NO WAY WARRANTED TO INDICATE THE CONDITIONS OF ACTUAL QUANTITIES OF WORK WHICH WILL BE REQUIRED.

Plotted Date: 11/28/2018

DESIGNER/DRAFTER: **KG**

CHECKED BY: **AML**

HORIZ. SCALE IN FEET 0 40 80

VERT. SCALE IN FEET 0 4 8

STATE OF CONNECTICUT
DEPARTMENT OF TRANSPORTATION

Filename: ...\PRO-01_PROFILE PLAN.dgn

SIGNATURE/ BLOCK:

STATE OF CONNECTICUT · ANDREW M. LEONARD · LICENSED · 36324 · 11/28/18

Stantec Consulting Services Inc.
55 Church Street
Suite 601
New Haven, CT 06510

PROJECT TITLE:
REHABILITATION OF BRIDGE NO. 00948, ROUTE 34 OVER WEPAWAUG RIVER

TOWN: **ORANGE**

DRAWING TITLE: **PROFILE ROUTE 34**

PROJECT NO. **106-127**

DRAWING NO. **PRO-01**

SHEET NO. **03.07**

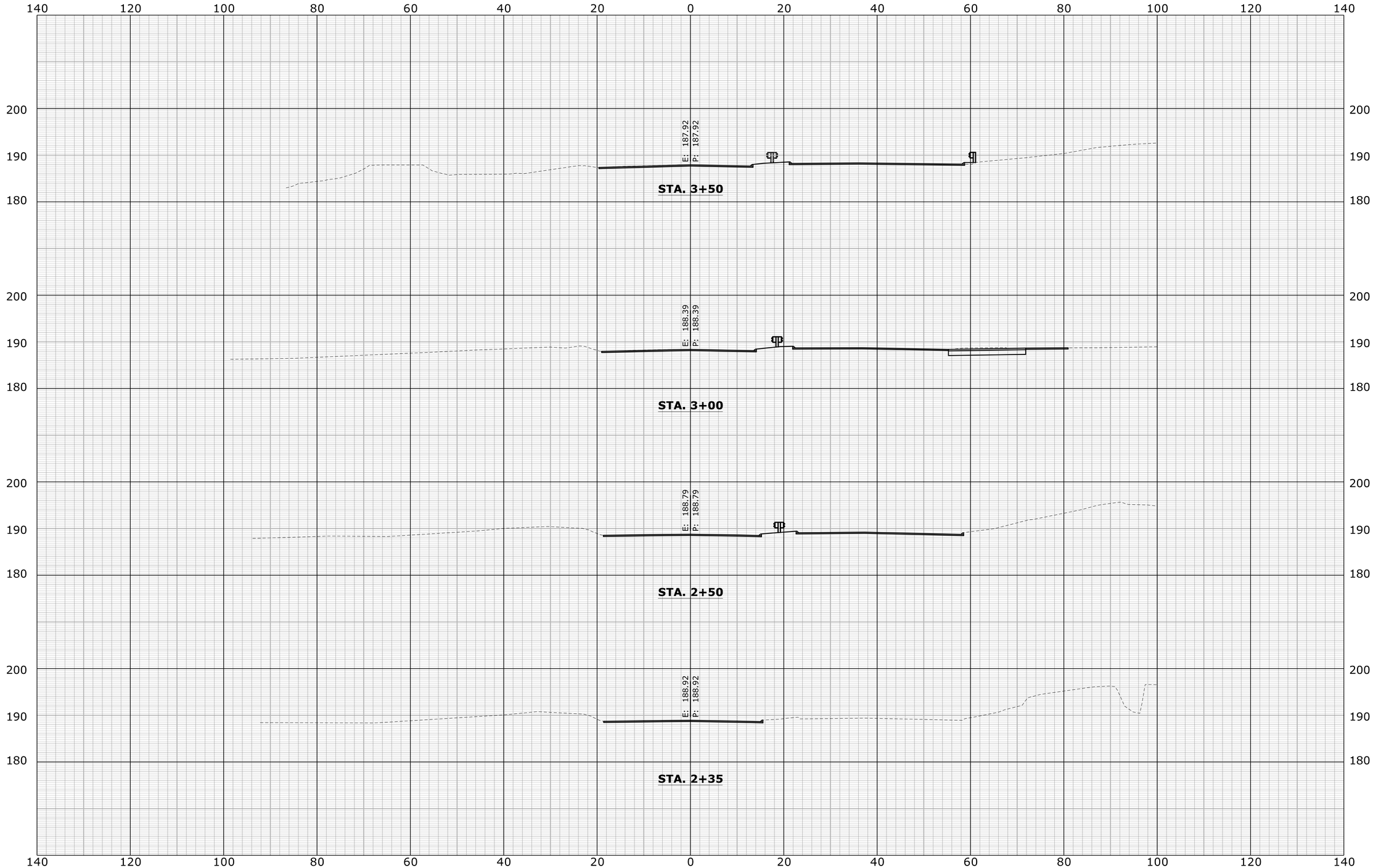

REV.	DATE	REVISION DESCRIPTION	SHEET NO.
-	-	-	-
-	-	-	-
-	-	-	-
-	-	-	-
2	11/27/18	REVISED CROSS SECTION	03.17.A2
1	11/15/18	REVISION CROSS SECTION SCALE	03.17.A1

THE INFORMATION, INCLUDING ESTIMATED QUANTITIES OF WORK, SHOWN ON THESE SHEETS IS BASED ON LIMITED INVESTIGATIONS BY THE STATE AND IS IN NO WAY WARRANTED TO INDICATE THE CONDITIONS OF ACTUAL QUANTITIES OF WORK WHICH WILL BE REQUIRED.

Plotted Date: 11/28/2018

DESIGNER/DRAFTER: KG

CHECKED BY: JE

SCALE IN FEET 0 10 20

SCALE 1" = 10'

STATE OF CONNECTICUT
DEPARTMENT OF TRANSPORTATION

Filename: ...\XSC-01_106-127_10scale.dgn

SIGNATURE/BLOCK:

Stantec Consulting Services Inc.
55 Church Street
Suite 601
New Haven, CT 06510

PROJECT TITLE:

REHABILITATION OF BRIDGE NO. 00948, ROUTE 34 OVER WEPAWAUG RIVER

TOWN: **ORANGE**

DRAWING TITLE: **CROSS SECTIONS ROUTE 34 WB**

PROJECT NO. 106-127

DRAWING NO. XSC-01

SHEET NO. 03.08

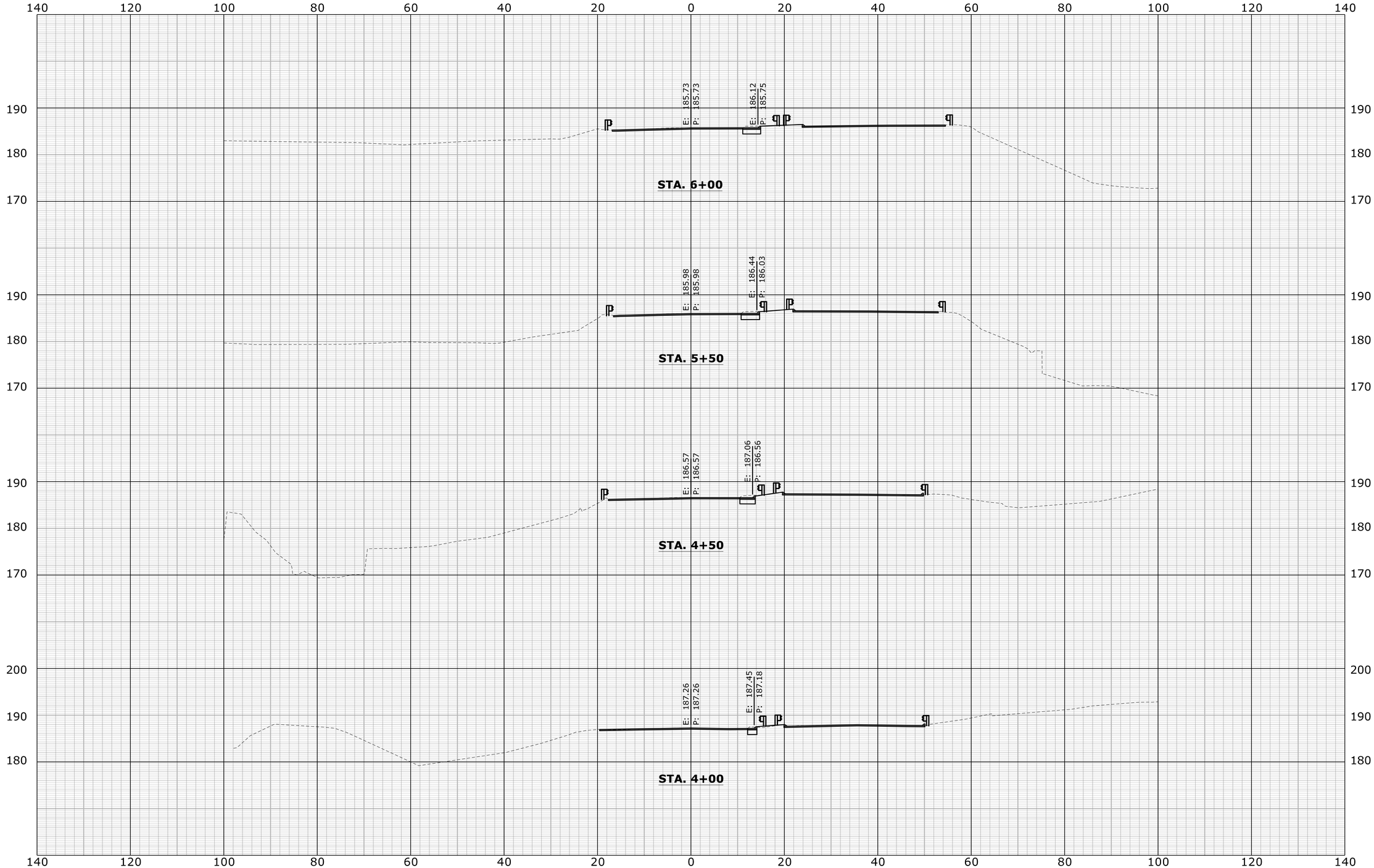

REV.	DATE	REVISION DESCRIPTION	SHEET NO.
-	-	-	-
-	-	-	-
-	-	-	-
-	-	-	-
2	11/27/18	REVISED CROSS SECTION	03.17.A2
1	11/15/18	REVISED CROSS SECTION SCALE	03.17.A1

THE INFORMATION, INCLUDING ESTIMATED QUANTITIES OF WORK, SHOWN ON THESE SHEETS IS BASED ON LIMITED INVESTIGATIONS BY THE STATE AND IS IN NO WAY WARRANTED TO INDICATE THE CONDITIONS OF ACTUAL QUANTITIES OF WORK WHICH WILL BE REQUIRED.

Plotted Date: 11/28/2018

DESIGNER/DRAFTER: KG

CHECKED BY: JE

SCALE IN FEET 0 10 20

SCALE 1" = 10'

STATE OF CONNECTICUT
DEPARTMENT OF TRANSPORTATION

Filename: ...\XSC-02_106-127_10scale.dgn

SIGNATURE/BLOCK:

Stantec Consulting Services Inc.
55 Church Street
Suite 601
New Haven, CT 06510

PROJECT TITLE:
REHABILITATION OF BRIDGE NO. 00948, ROUTE 34 OVER WEPAWAUG RIVER

TOWN: ORANGE

DRAWING TITLE: CROSS SECTIONS ROUTE 34 WB

PROJECT NO. 106-127

DRAWING NO. XSC-02

SHEET NO. 03.09

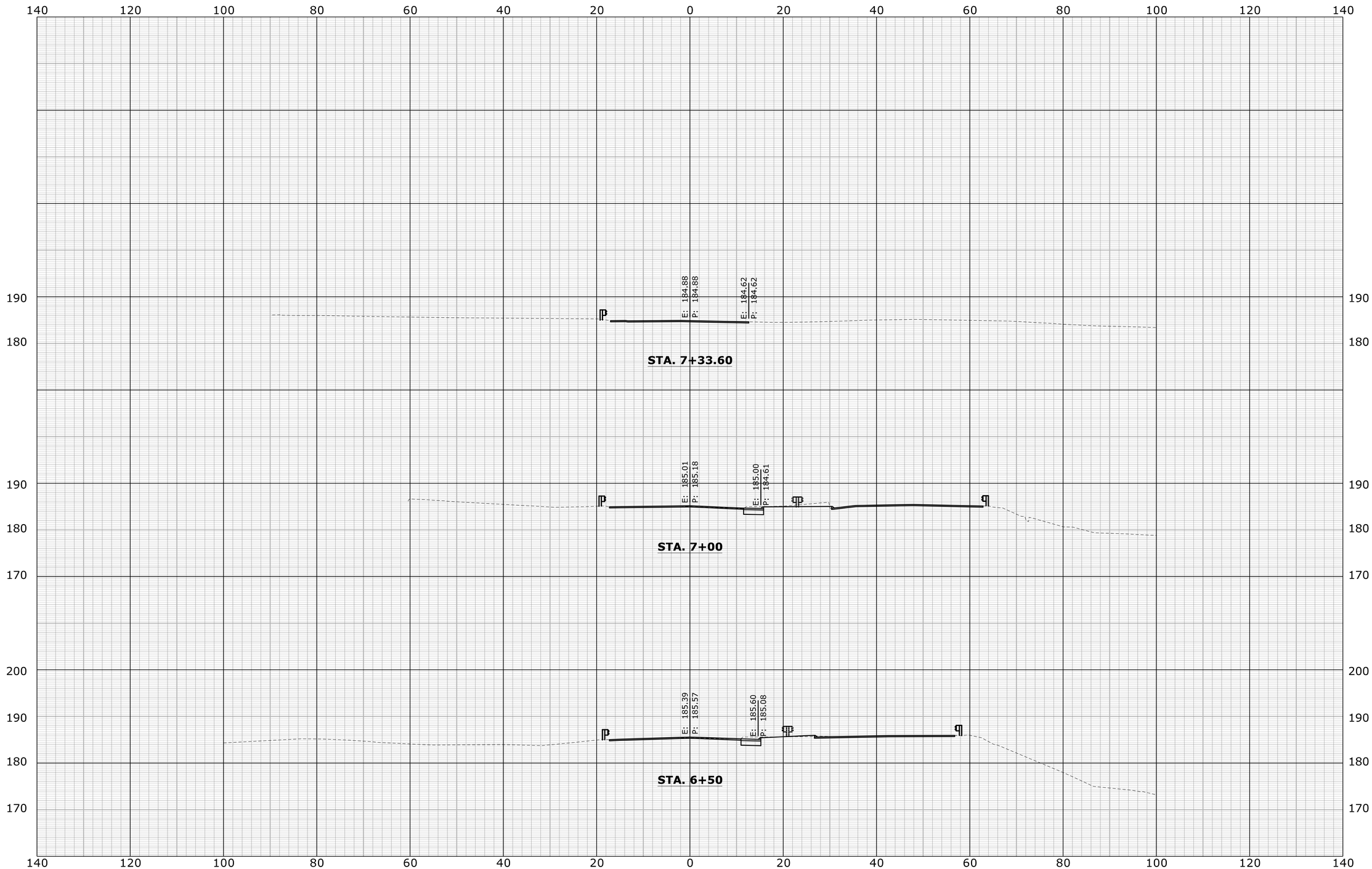

REV.	DATE	REVISION DESCRIPTION	SHEET NO.
-	-	-	-
-	-	-	-
-	-	-	-
-	-	-	-
2	11/27/18	REVISED CROSS SECTION	03.17.A2
1	11/15/18	REVISED CROSS SECTION SCALE	03.17.A1

THE INFORMATION, INCLUDING ESTIMATED QUANTITIES OF WORK, SHOWN ON THESE SHEETS IS BASED ON LIMITED INVESTIGATIONS BY THE STATE AND IS IN NO WAY WARRANTED TO INDICATE THE CONDITIONS OF ACTUAL QUANTITIES OF WORK WHICH WILL BE REQUIRED.

Plotted Date: 11/28/2018

DESIGNER/DRAFTER: KG

CHECKED BY: JE

SCALE IN FEET 0 10 20

SCALE 1" = 10'

STATE OF CONNECTICUT
DEPARTMENT OF TRANSPORTATION

Filename: ...\XSC-03_106-127_10scale.dgn

SIGNATURE/BLOCK:

Stantec Consulting Services Inc.
55 Church Street
Suite 601
New Haven, CT 06510

PROJECT TITLE:

REHABILITATION OF BRIDGE NO. 00948, ROUTE 34 OVER WEPAWAUG RIVER

TOWN: **ORANGE**

DRAWING TITLE: **CROSS SECTIONS ROUTE 34 WB**

PROJECT NO. 106-127

DRAWING NO. XSC-03

SHEET NO. 03.10

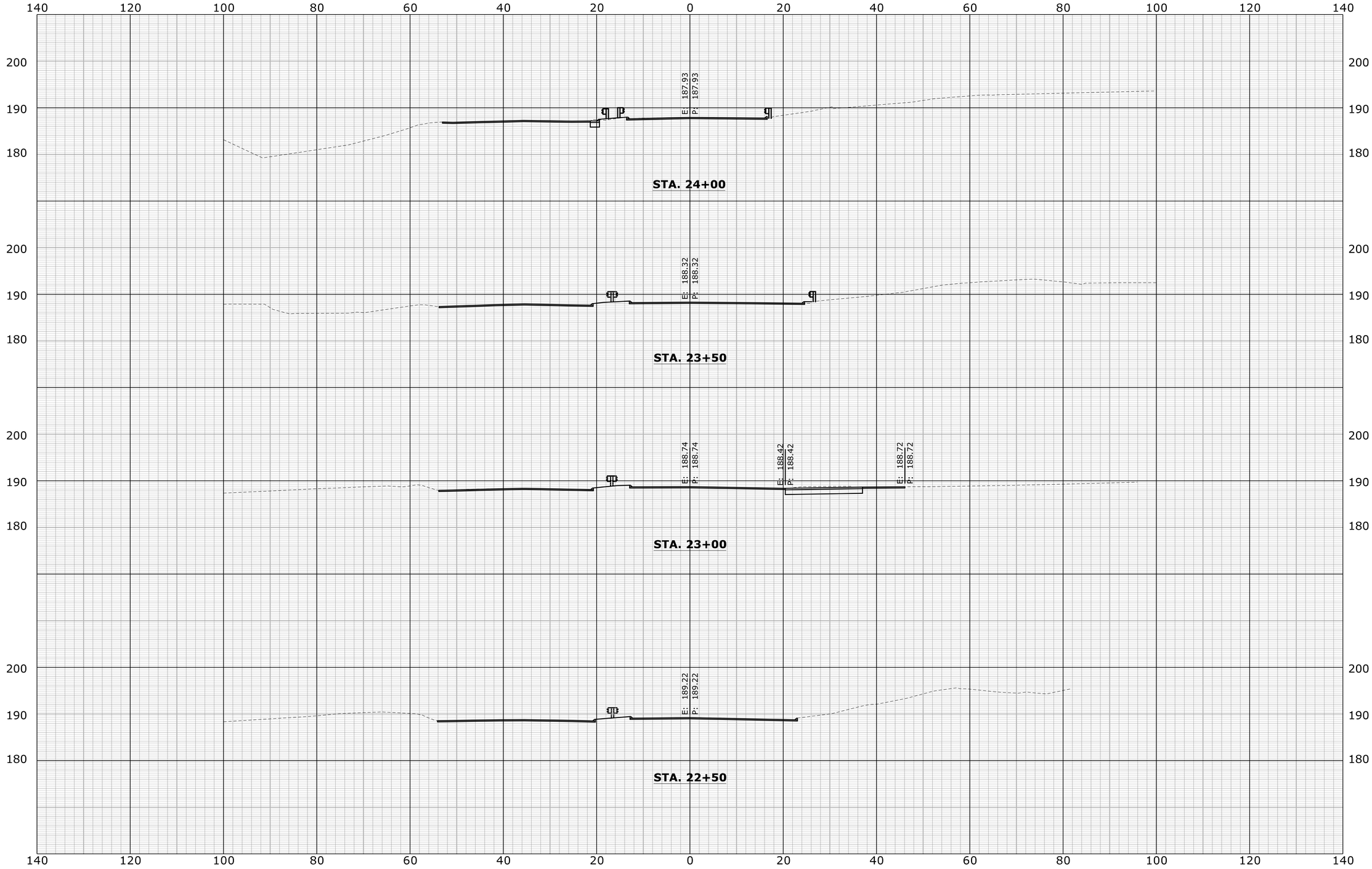

REV.	DATE	REVISION DESCRIPTION	SHEET NO.
-	-	-	-
-	-	-	-
-	-	-	-
-	-	-	-
2	11/27/18	REVISED CROSS SECTION	03.17.A2
1	11/15/18	REVISED CROSS SECTION SCALE	03.17.A1

THE INFORMATION, INCLUDING ESTIMATED QUANTITIES OF WORK, SHOWN ON THESE SHEETS IS BASED ON LIMITED INVESTIGATIONS BY THE STATE AND IS IN NO WAY WARRANTED TO INDICATE THE CONDITIONS OF ACTUAL QUANTITIES OF WORK WHICH WILL BE REQUIRED.

Plotted Date: 11/28/2018

DESIGNER/DRAFTER: KG

CHECKED BY: JE

SCALE IN FEET 0 10 20

SCALE 1" = 10'

STATE OF CONNECTICUT
DEPARTMENT OF TRANSPORTATION

Filename: ...\XSC-04_106-127_10scale.dgn

SIGNATURE/BLOCK:

Stantec Consulting Services Inc.
55 Church Street
Suite 601
New Haven, CT 06510

PROJECT TITLE:

REHABILITATION OF BRIDGE NO. 00948, ROUTE 34 OVER WEPAWAUG RIVER

TOWN: **ORANGE**

DRAWING TITLE: **CROSS SECTIONS ROUTE 34 EB**

PROJECT NO. **106-127**

DRAWING NO. **XSC-04**

SHEET NO. **03.11**

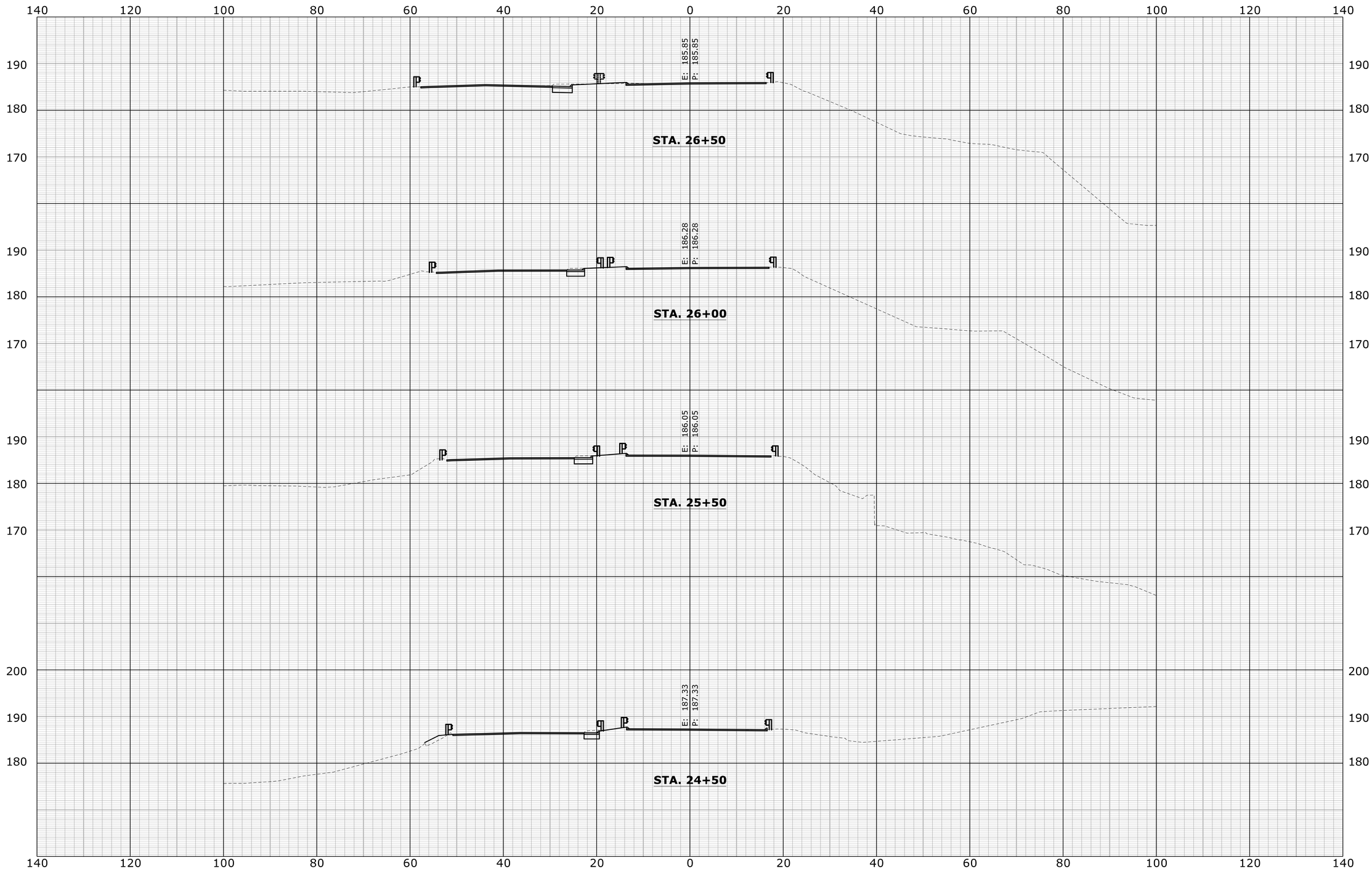

REV.	DATE	REVISION DESCRIPTION	SHEET NO.
-	-	-	-
-	-	-	-
-	-	-	-
-	-	-	-
2	11/27/18	REVISED CROSS SECTION	03.17.A2
1	11/15/18	REVISED CROSS SECTION SCALE	03.17.A1

THE INFORMATION, INCLUDING ESTIMATED QUANTITIES OF WORK, SHOWN ON THESE SHEETS IS BASED ON LIMITED INVESTIGATIONS BY THE STATE AND IS IN NO WAY WARRANTED TO INDICATE THE CONDITIONS OF ACTUAL QUANTITIES OF WORK WHICH WILL BE REQUIRED.

Plotted Date: 11/28/2018

DESIGNER/DRAFTER: **KG**

CHECKED BY: **JE**

SCALE IN FEET
0 10 20
SCALE 1" = 10'

STATE OF CONNECTICUT
DEPARTMENT OF TRANSPORTATION

Filename: ...\XSC-05_106-127_10scale.dgn

SIGNATURE/ BLOCK:

Stantec Consulting Services Inc.
55 Church Street
Suite 601
New Haven, CT 06510

PROJECT TITLE:
REHABILITATION OF BRIDGE NO. 00948, ROUTE 34 OVER WEPAWAUG RIVER

TOWN: **ORANGE**

DRAWING TITLE:
CROSS SECTIONS ROUTE 34 EB

PROJECT NO. **106-127**

DRAWING NO. **XSC-05**

SHEET NO. **03.12**

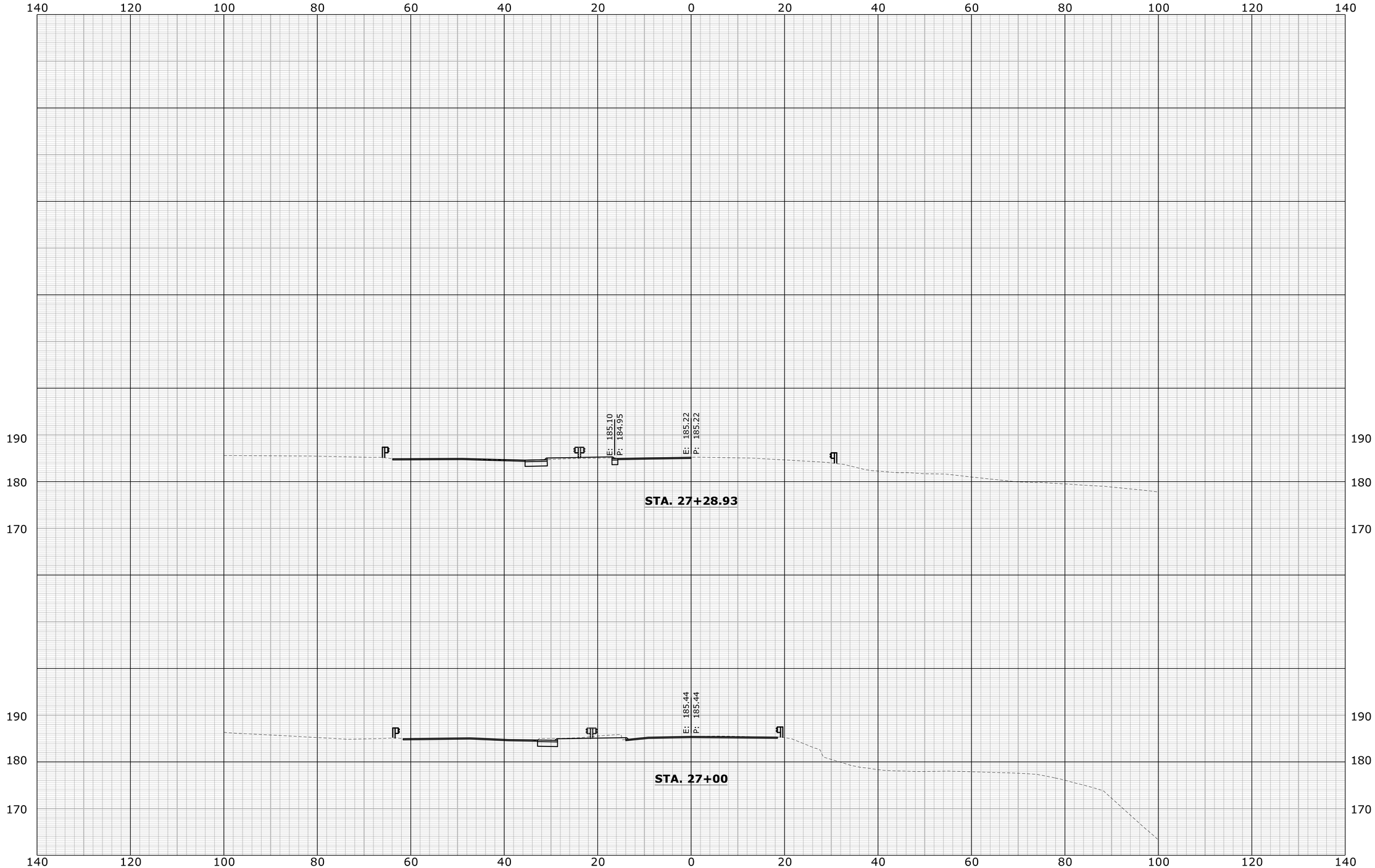

REV.	DATE	REVISION DESCRIPTION	SHEET NO.
-	-	-	-
-	-	-	-
-	-	-	-
-	-	-	-
2	11/27/18	REVISED CROSS SECTION	03.17.A2
1	11/15/18	REVISED CROSS SECTION SCALE	03.17.A1

THE INFORMATION, INCLUDING ESTIMATED QUANTITIES OF WORK, SHOWN ON THESE SHEETS IS BASED ON LIMITED INVESTIGATIONS BY THE STATE AND IS IN NO WAY WARRANTED TO INDICATE THE CONDITIONS OF ACTUAL QUANTITIES OF WORK WHICH WILL BE REQUIRED.

Plotted Date: 11/28/2018

DESIGNER/DRAFTER: **KG**

CHECKED BY: **JE**

SCALE IN FEET
0 10 20
SCALE 1" = 10'

STATE OF CONNECTICUT
DEPARTMENT OF TRANSPORTATION

Filename: ...\XSC-06_106-127_10scale.dgn

SIGNATURE/BLOCK:

Stantec Consulting Services Inc.
55 Church Street
Suite 601
New Haven, CT 06510

PROJECT TITLE:
REHABILITATION OF BRIDGE NO. 00948, ROUTE 34 OVER WEPAWAUG RIVER

TOWN: **ORANGE**

DRAWING TITLE:
CROSS SECTIONS ROUTE 34 EB

PROJECT NO. **106-127**

DRAWING NO. **XSC-06**

SHEET NO. **03.13**