04 - STRUCTURES
INDEX OF DRAWINGS

DRAWING NUMBER	DRAWING TITLE	DRAWING NUMBER	DRAWING TITLE
S-01	INDEX OF DRAWINGS		
S-02	GENERAL PLAN		
S-03	GENERAL NOTES AND QUANTITIES		
S-04	CONSTRUCTION STAGING - 1		
S-05	CONSTRUCTION STAGING - 2		
S-06	TEMPORARY PRECAST CONCRETE BARRIER CURB (STRUCTURE)		
S-07	WATER HANDLING PLAN		
S-08	UNDERSIDE OF ARCH PLAN		
S-09	REPAIR DETAILS		
S-10	DECK PLAN		
S-11	PARAPET AND MEDIAN DETAILS		
S-12	RAILING ATTACHMENT DETAILS		

DESIGNED BY:
Stantec
STANTEC CONSULTING SERVICES INC.
55 CHURCH STREET, SUITE 601
NEW HAVEN, CT 06510

Andrew Lessard
2018.11.28
14:58:16-05'00'

REV.	DATE	REVISION DESCRIPTION	SHEET NO.
-	-	-	-
-	-	-	-
-	-	-	-
-	-	-	-
-	-	-	-
-	-	-	-

THE INFORMATION, INCLUDING ESTIMATED QUANTITIES OF WORK, SHOWN ON THESE SHEETS IS BASED ON LIMITED INVESTIGATIONS BY THE STATE AND IS IN NO WAY WARRANTED TO INDICATE THE CONDITIONS OF ACTUAL QUANTITIES OF WORK WHICH WILL BE REQUIRED.

Plotted Date: 11/28/2018

DESIGNER/DRAFTER: JJF
CHECKED BY: AML

STATE OF CONNECTICUT
DEPARTMENT OF TRANSPORTATION

Filename: ...\S-01 INDEX OF DRAWINGS.dgn

SIGNATURE/BLOCK:
Stantec Consulting Services Inc.
55 Church Street
Suite 601
New Haven, CT 06510

PROJECT TITLE:
REHABILITATION OF BRIDGE NO. 00948, ROUTE 34 OVER WEPAWAUG RIVER

TOWN: ORANGE

DRAWING TITLE: INDEX OF DRAWINGS

PROJECT NO. 106-127
DRAWING NO. S-01
SHEET NO. 04.01

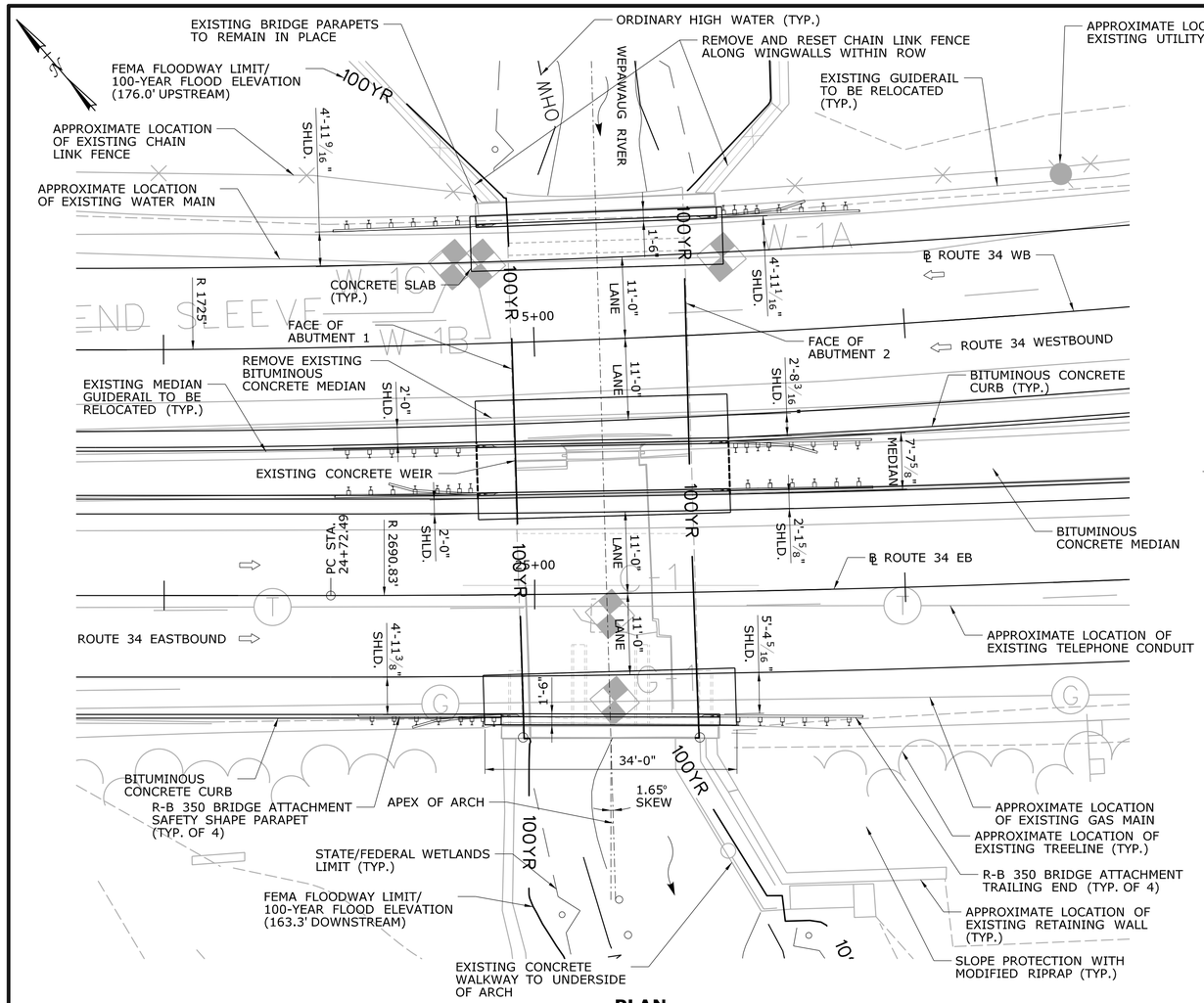

PLAN

SCALE: 1" = 10'-0"

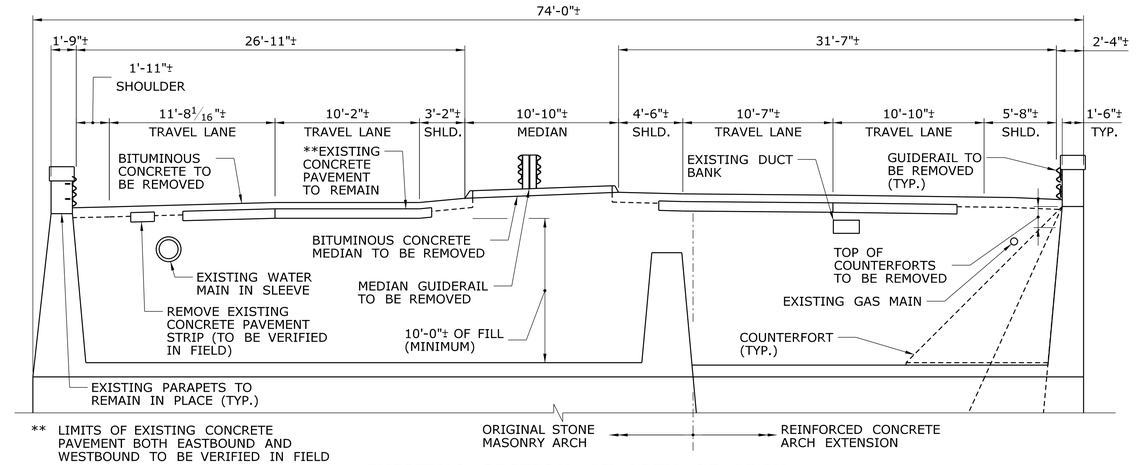

** LIMITS OF EXISTING CONCRETE PAVEMENT BOTH EASTBOUND AND WESTBOUND TO BE VERIFIED IN FIELD

EXISTING SECTION AT APEX OF ARCH

SCALE: 3/16" = 1'-0"

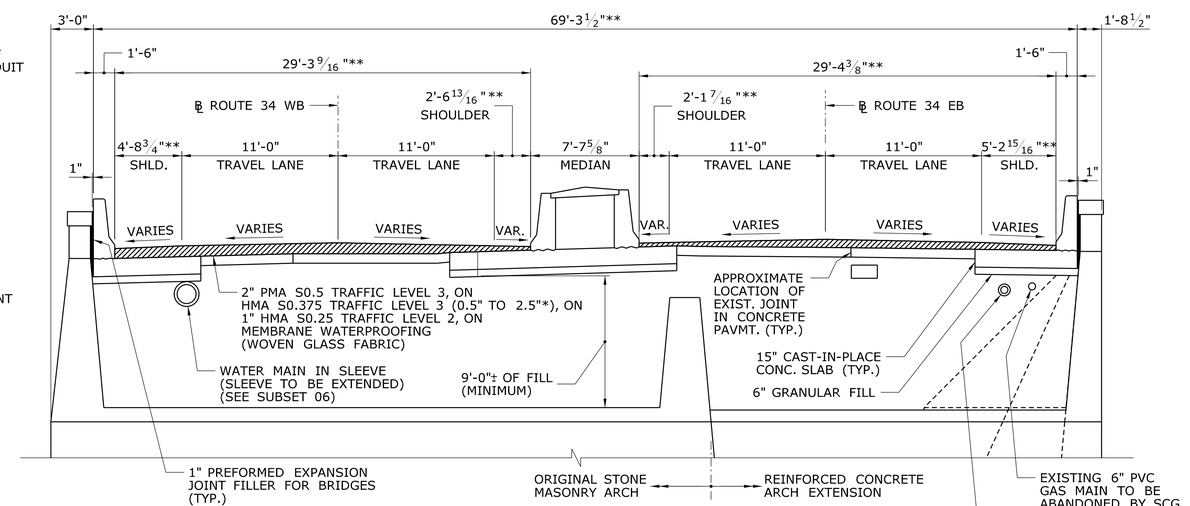

* ACTUAL PAVEMENT THICKNESS VARIES. THICKNESS AND NUMBER OF LIFTS AS DIRECTED BY THE ENGINEER.

** VARIES DUE TO BRIDGE GEOMETRY

PROPOSED SECTION AT APEX OF ARCH

SCALE: 3/16" = 1'-0"

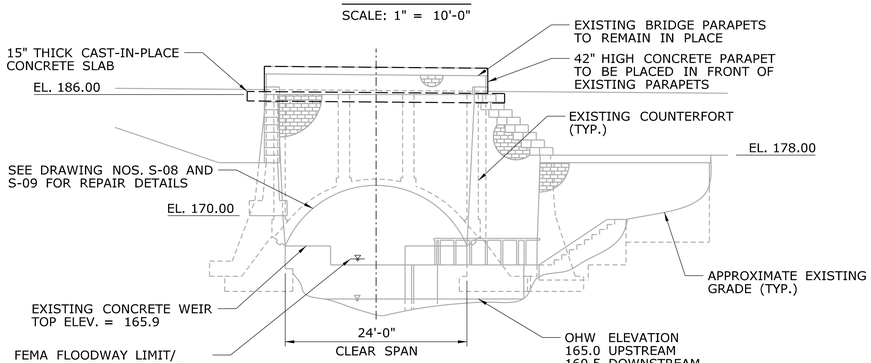

SOUTH ELEVATION

SCALE: 1" = 10'-0"

CONCRETE DISTRIBUTION		
SUPERSTRUCTURE	C.Y.	101
SUBSTRUCTURE	C.Y.	-
FOOTINGS	C.Y.	-
TOTAL	C.Y.	101

INSPECTION OF FIELD WELDS		
METHODS	UNIT	QUANTITY
ULTRASONIC	INCH	NONE
MAGNETIC PARTICLE	FEET	NONE

NOTICE TO BRIDGE INSPECTORS

THE DEPARTMENT'S BRIDGE SAFETY PROCEDURES REQUIRE THIS BRIDGE TO BE INSPECTED FOR, BUT NOT LIMITED TO, ALL APPROPRIATE COMPONENTS INDICATED IN THE GOVERNING MANUALS FOR BRIDGE INSPECTION. ATTENTION MUST BE GIVEN TO INSPECTING THE FOLLOWING SPECIAL COMPONENTS AND DETAILS. (THE LISTING FOR COMPONENTS FOR SPECIFIC ATTENTION SHALL NOT BE CONSTRUED TO REDUCE THE IMPORTANCE OF INSPECTION OF ANY OTHER COMPONENT OF THE STRUCTURE). THE FREQUENCY OF INSPECTION OF THIS STRUCTURE SHALL BE IN ACCORDANCE WITH THE GOVERNING MANUALS FOR BRIDGE INSPECTION, UNLESS OTHERWISE DIRECTED BY THE MANAGER OF BRIDGE SAFETY AND EVALUATION.

COMPONENT OR DETAIL	STRUCTURE SHEET REFERENCE
-	-
-	-

REV.	DATE	REVISION DESCRIPTION	SHEET NO.
-	-	-	-
-	-	-	-
-	-	-	-
-	-	-	-
-	-	-	-
-	-	-	-

THE INFORMATION, INCLUDING ESTIMATED QUANTITIES OF WORK, SHOWN ON THESE SHEETS IS BASED ON LIMITED INVESTIGATIONS BY THE STATE AND IS IN NO WAY WARRANTED TO INDICATE THE CONDITIONS OF ACTUAL QUANTITIES OF WORK WHICH WILL BE REQUIRED.

Plotted Date: 11/28/2018

DESIGNER/DRAFTER: JJF
CHECKED BY: AML
SCALE AS NOTED

STATE OF CONNECTICUT
DEPARTMENT OF TRANSPORTATION

Filename: ...\S-02 GENERAL PLAN.dgn

SIGNATURE/ BLOCK:

Stantec Consulting Services Inc.
55 Church Street
Suite 601
New Haven, CT 06510

PROJECT TITLE:

REHABILITATION OF BRIDGE NO. 00948, ROUTE 34 OVER WEPAWAUG RIVER

TOWN: ORANGE

DRAWING TITLE: GENERAL PLAN

PROJECT NO. 106-127
DRAWING NO. S-02
SHEET NO. 04.02

TABLE OF BRIDGE QUANTITIES

ITEM	UNIT	QUANTITY
REMOVAL OF HMA WEARING SURFACE	SY	265
CUT CONCRETE PAVEMENT	LF	86
REMOVAL OF CONCRETE PAVEMENT	SY	16
STRUCTURE EXCAVATION-EARTH (COMPLETE)	CY	45
HANDLING WATER	EST	EST
GRANULAR FILL	CY	44
PMA S0.5	TON	27
HMA S0.375	TON	66
HMA S0.25	TON	14
CONSTRUCT WEEP DRAINS	EA	16
2" POLYVINYL CHLORIDE PIPE	LF	20
CLASS "S" CONCRETE	CF	288
PARTIAL DEPTH PATCH	CF	270
CLASS "F" CONCRETE	CY	101
1/2" PREFORMED EXPANSION JOINT FILLER FOR BRIDGES	SF	25
1" PREFORMED EXPANSION JOINT FILLER FOR BRIDGES	SF	282
DEFORMED STEEL BARS	LB	1300
DEFORMED STEEL BARS - EPOXY COATED	LB	14000
WELDED WIRE FABRIC - EPOXY COATED	SY	23
DOWEL BAR SPLICER SYSTEM - EPOXY COATED	EA	143
DRILLING HOLES AND GROUTING DOWEL	EA	423
DEBRIS SHIELD	LS	LS
CLEAN AND COAT EXPOSED REINFORCING STEEL	LF	325
REPOINTED MASONRY	SY	296
MEMBRANE WATERPROOFING (WOVEN GLASS FABRIC)	SY	131
DAMPPROOFING	SY	36
GEOTEXTILE (SUBSURFACE DRAINAGE - CLASS A)	SY	15
PENETRATING SEALER PROTECTIVE COMPOUND	SY	106
TEMPORARY PRECAST CONCRETE BARRIER CURB (STRUCTURE)	LF	160
RELOCATED TEMPORARY PRECAST CONCRETE BARRIER CURB (STRUCTURE)	LF	160
REMOVAL OF EXISTING METAL BRIDGE RAIL	LF	60
REMOVAL OF EXISTING MASONRY	CY	10

WORKING POINTS

POINT	LOCATION	NORTHING	EASTING
WP-1	ROUTE 34 WB - LEFT START GUTTERLINE	171568.53	522876.99
WP-2	ROUTE 34 WB - LEFT MIDDLE GUTTERLINE	171558.43	522889.66
WP-3	ROUTE 34 WB - LEFT END GUTTERLINE	171548.27	522902.40
WP-4	ROUTE 34 WB - RIGHT START GUTTERLINE	171546.57	522858.11
WP-5	ROUTE 34 WB - RIGHT MIDDLE GUTTERLINE	171535.70	522871.18
WP-6	ROUTE 34 WB - RIGHT END GUTTERLINE	171524.83	522884.26
WP-7	ROUTE 34 EB - LEFT START GUTTERLINE	171540.64	522853.30
WP-8	ROUTE 34 EB - LEFT MIDDLE GUTTERLINE	171529.77	522866.37
WP-9	ROUTE 34 EB - LEFT END GUTTERLINE	171518.90	522879.44
WP-10	ROUTE 34 EB - RIGHT START GUTTERLINE	171516.61	522836.72
WP-11	ROUTE 34 EB - RIGHT MIDDLE GUTTERLINE	171508.29	522848.91
WP-12	ROUTE 34 EB - RIGHT END GUTTERLINE	171497.31	522859.03

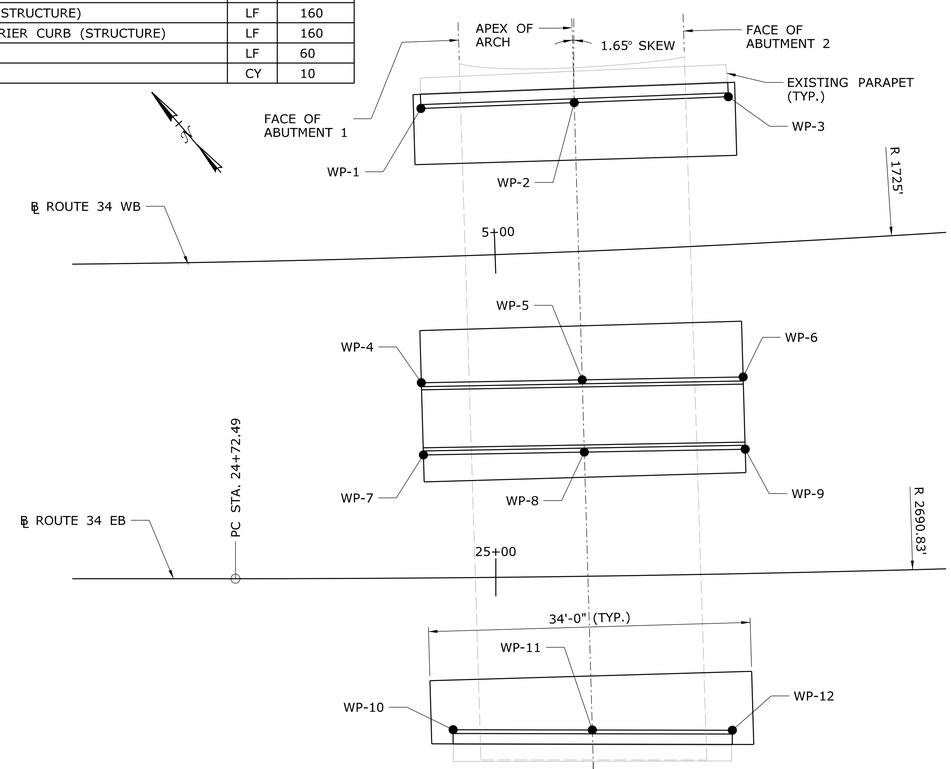

LAYOUT PLAN

SCALE: 1/8" = 1'-0"

GENERAL NOTES

SPECIFICATIONS: CONNECTICUT DEPARTMENT OF TRANSPORTATION FORM 817 (2016), SUPPLEMENTAL SPECIFICATIONS DATED JANUARY 2018 AND SPECIAL PROVISIONS.

DESIGN SPECIFICATIONS: LRFD BRIDGE DESIGN SPECIFICATIONS, SEVENTH EDITION (AASHTO - 2014), WITH INTERIM SPECIFICATIONS UP TO AND INCLUDING 2016, AS SUPPLEMENTED BY THE CONNECTICUT DEPARTMENT OF TRANSPORTATION BRIDGE DESIGN MANUAL (2003).

ALLOWABLE DESIGN STRESSES:

CLASS "F" CONCRETE: BASED ON f'c = 4,000 psi

THE SPECIFIED CONCRETE STRENGTH USED IN DESIGN, f'c, OF THE CONCRETE COMPONENTS IS NOTED ABOVE. THE MINIMUM COMPRESSIVE STRENGTH OF THE CONCRETE IN THE CONSTRUCTED COMPONENTS SHALL CONFORM TO THE REQUIREMENTS OF "SECTION 6.01 CONCRETE FOR STRUCTURES".

REINFORCEMENT:
ASTM A615 GRADE 60
Fy = 60,000 psi

LIVE LOAD: HL-93 DESIGN VEHICLE
CT-L73.0 LEGAL VEHICLE
CT-L3S2 LEGAL VEHICLE
CT-P76.5 PERMIT VEHICLE
CT-P120(6) PERMIT VEHICLE
CT-P140(7)a-b PERMIT VEHICLES
CT-P160(8)a-b PERMIT VEHICLES
CT-P180(9) PERMIT VEHICLE
CT-P200(10) PERMIT VEHICLE
CT-P380 PERMIT VEHICLE
CT-TLC PERMIT VEHICLE

FUTURE PAVING ALLOWANCE: NONE

BITUMINOUS CONCRETE OVERLAY: ACTUAL PAVEMENT THICKNESS VARIES. THICKNESS AND NUMBER OF LIFTS SHALL BE AS DIRECTED BY ENGINEER. THICKNESS RANGE REQUIREMENTS OF EACH LIFT ARE AS FOLLOWS:

2" PMA S0.5 TRAFFIC LEVEL 3, ON
HMA S0.375 TRAFFIC LEVEL 3 (0.5" TO 2.5"), ON
1" HMA S0.25 TRAFFIC LEVEL 2, ON

FOUNDATION PRESSURES: THE VARIOUS GROUP LOADINGS NOTED ON THE SUBSTRUCTURE PLAN SHEETS REFER TO THE GROUP LOADS AS GIVEN IN THE AASHTO LRFD GUIDE SPECIFICATIONS.

DIMENSIONS: WHEN DECIMAL DIMENSIONS ARE GIVEN TO LESS THAN THREE DECIMAL PLACES, THE OMITTED DIGITS SHALL BE ASSUMED TO BE ZEROS.

EXISTING DIMENSIONS: DIMENSIONS OF THE EXISTING STRUCTURE SHOWN ON THESE PLANS ARE FOR GENERAL REFERENCE ONLY. THEY HAVE BEEN TAKEN FROM THE ORIGINAL DESIGN DRAWINGS AND ARE NOT GUARANTEED. THE CONTRACTOR SHALL TAKE ALL FIELD MEASUREMENTS NECESSARY TO ASSURE PROPER FIT OF THE FINISHED WORK AND SHALL ASSUME FULL RESPONSIBILITY FOR THEIR ACCURACY. WHEN SHOP DRAWINGS BASED ON FIELD MEASUREMENTS ARE SUBMITTED FOR APPROVAL, THE FIELD MEASUREMENTS SHALL ALSO BE SUBMITTED FOR REFERENCE BY THE REVIEWER.

CLASS "F" CONCRETE: CLASS "F" CONCRETE SHALL BE USED FOR CONCRETE SLABS INCLUDING PARAPETS AND MEDIAN BARRIER.

EXPOSED EDGES: EXPOSED EDGES OF CONCRETE SHALL BE BEVELED 1" x 1" UNLESS DIMENSIONED OTHERWISE.

CONCRETE COVER: ALL REINFORCEMENT SHALL HAVE TWO INCHES COVER UNLESS DIMENSIONED OTHERWISE.

REINFORCEMENT: ALL REINFORCEMENT SHALL BE ASTM A615 GRADE 60.

EPOXY COATED REINFORCING BARS:

ALL REINFORCEMENT IN THE SUPERSTRUCTURE INCLUDING THE CONCRETE SLAB, PARAPETS, AND MEDIAN SHALL BE EPOXY COATED UNLESS OTHERWISE NOTED. THESE BARS SHALL BE INCLUDED IN THE PAY ITEM FOR "DEFORMED STEEL BARS (EPOXY COATED)."

CONSTRUCTION JOINTS: CONSTRUCTION JOINTS, OTHER THAN THOSE SHOWN ON THE PLANS, WILL NOT BE PERMITTED WITHOUT THE PRIOR APPROVAL OF THE ENGINEER.

PREFORMED EXPANSION JOINT FILLER: THE COST OF FURNISHING AND INSTALLING PREFORMED EXPANSION JOINT FILLER SHALL BE PAID FOR UNDER THE ITEM "1/2" PREFORMED EXPANSION JOINT FILLER FOR BRIDGES" OR "1" PREFOREMED EXPANSION JOINT FILLER FOR BRIDGES" AS APPLICABLE. THE COST OF FURNISHING AND INSTALLING THE CLOSED CELL BACKER ROD AND SILICONE SEALANT SHALL BE PAID FOR UNDER THE ITEM "CLASS 'F' CONCRETE".

BRIDGE IDENTIFICATION PLACARDS: THE CONTRACTOR SHALL PROVIDE AND INSTALL NEW BRIDGE IDENTIFICATION SIGNS AT THE LEADING END OF EACH WINGWALL END BLOCK ON THE TRAFFIC SIDE. THE SIGNS SHALL BE FABRICATED WITH 40 GAUGE ALUMINUM SHEET METAL. THE SIGNS SHALL BE 4" x 12" WITH 3" WHITE REFLECTIVE BLOCK LETTERS ON GREEN REFLECTIVE SHEETING. EACH SIGN SHALL READ: 00948. ALL COSTS ASSOCIATED WITH PROVIDING AND INSTALLING THE BRIDGE SIGNS SHALL BE COVERED UNDER THE ITEM "SIGN FACE - SHEET ALUMINUM (TYPE IX RETROREFLECTIVE SHEETING)." THE FINAL LOCATION AND ATTACHMENT METHOD FOR THE SIGNS SHALL BE APPROVED BY THE ENGINEER PRIOR TO INSTALLATION.

GENERAL REPAIR NOTES

THE DETERIORATION AND REPAIR DIMENSIONS SHOWN HEREIN ARE BASED ON LIMITED FIELD OBSERVATIONS AND THE BRIDGE SAFETY AND INSPECTION REPORT DATED APRIL 12, 2018 BY CONNECTICUT DEPARTMENT OF TRANSPORTATION TEAM 6.

THE INFORMATION DEPICTED ON THE PLANS HEREIN IS INTENDED TO BE USED A GUIDE AND DOES NOT NECESSARILY REFLECT THE CURRENT CONDITION OF THE BRIDGE. THE EXACT LOCATION AND LIMITS OF DETERIORATION TO BE REPAIRED AND THE PROPOSED REPAIR DETAIL SHALL BE DETERMINED BY THE ENGINEER DURING CONSTRUCTION. NO MATERIAL SHALL BE ORDERED OR FABRICATED UNTIL THE ENGINEER HAS APPROVED REPAIR LOCATIONS.

CONCRETE REPAIR NOTES

THE CONTRACTOR SHALL PROVIDE SAFE ACCESS TO THE ABUTMENTS AND UNDERSIDE OF ARCH FOR THE ENGINEER TO DELINEATE AND REVIEW THE REPAIR WORK. THE COST OF PROVIDING ACCESS SHALL BE INCLUDED IN THE COST OF THE APPLICABLE REPAIR ITEMS.

THE PRIMARY REPAIR AT THE UNDERSIDE OF ARCH IS TO APPLY EPOXY COATING TO THE EXPOSED REINFORCING STEEL. EPOXY COATING OF EXPOSED REINFORCING STEEL SHALL BE PAID FOR UNDER THE ITEM "CLEAN AND COAT EXPOSED REINFORCING STEEL".

IF THE REMOVAL OF DETERIORATED CONCRETE EXTENDS GREATER THAN 3" IN DEPTH, OR IF THE REMOVAL EXPOSES THE FULL CIRCUMFERENCE OF THE REINFORCING STEEL BAR FOR A LENGTH EXCEEDING 12", THE WORK SHALL BE STOPPED AND THE ENGINEER BE NOTIFIED IMMODERATELY. WORK OF THIS TYPE SHALL BE PAID FOR UNDER THE ITEM "CLASS 'S' CONCRETE".

THE CONTRACTOR SHALL NOT PREFORM ANY REPAIR WORK WITHOUT PRIOR APPROVAL FROM THE ENGINEER.

REV.	DATE	REVISION DESCRIPTION	SHEET NO.
-	-	-	-
-	-	-	-
-	-	-	-
-	-	-	-
-	-	-	-

THE INFORMATION, INCLUDING ESTIMATED QUANTITIES OF WORK, SHOWN ON THESE SHEETS IS BASED ON LIMITED INVESTIGATIONS BY THE STATE AND IS IN NO WAY WARRANTED TO INDICATE THE CONDITIONS OF ACTUAL QUANTITIES OF WORK WHICH WILL BE REQUIRED.

Plotted Date: 11/28/2018

DESIGNER/DRAFTER: JJF
CHECKED BY: AML
SCALE AS NOTED

STATE OF CONNECTICUT
DEPARTMENT OF TRANSPORTATION

Filename: ...\S-03 GENERAL NOTES & QUANTITIES.dgn

SIGNATURE/BLOCK:
Stantec Consulting Services Inc.
55 Church Street
Suite 601
New Haven, CT 06510

PROJECT TITLE:
REHABILITATION OF BRIDGE NO. 00948, ROUTE 34 OVER WEPAWAUG RIVER

TOWN: **ORANGE**

DRAWING TITLE: **GENERAL NOTES AND QUANTITIES**

PROJECT NO. 106-127
DRAWING NO. S-03
SHEET NO. 04.03

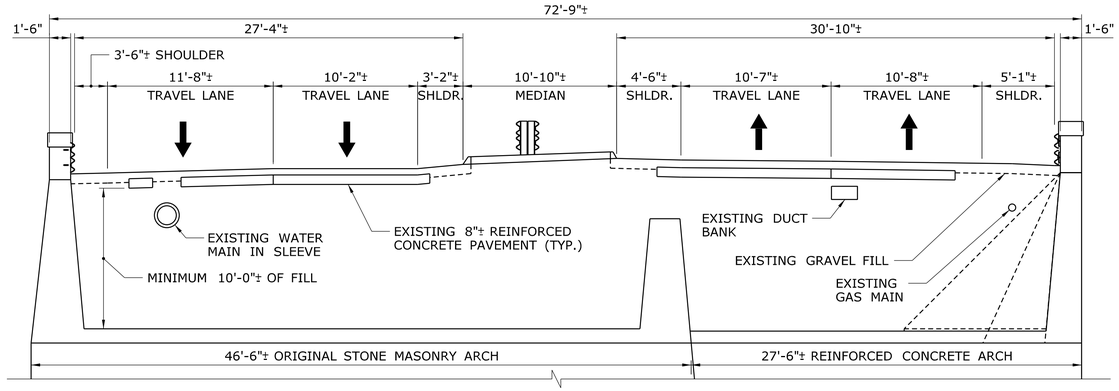

EXISTING CONDITION

SCALE: 3/16" = 1'-0"

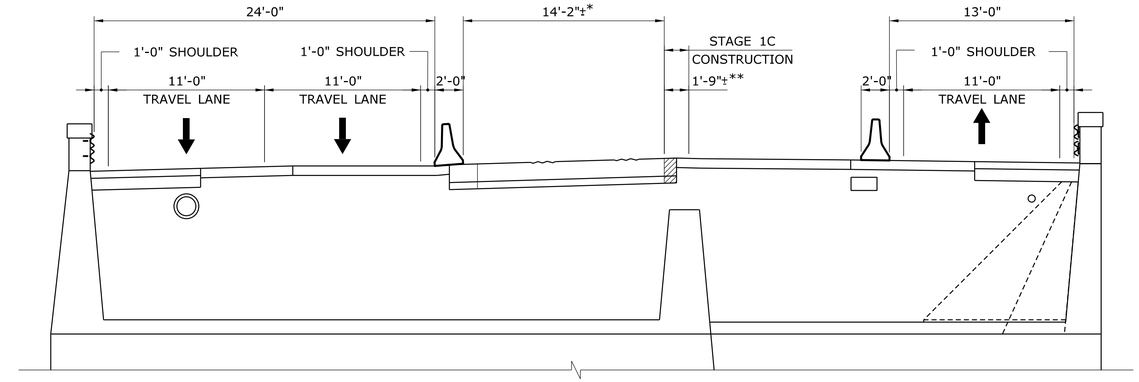

* VARIES DUE TO BRIDGE GEOMETRY

** VARIES DUE TO LIMITS OF EXISTING CONCRETE PAVEMENT

STAGE 1C

SCALE: 3/16" = 1'-0"

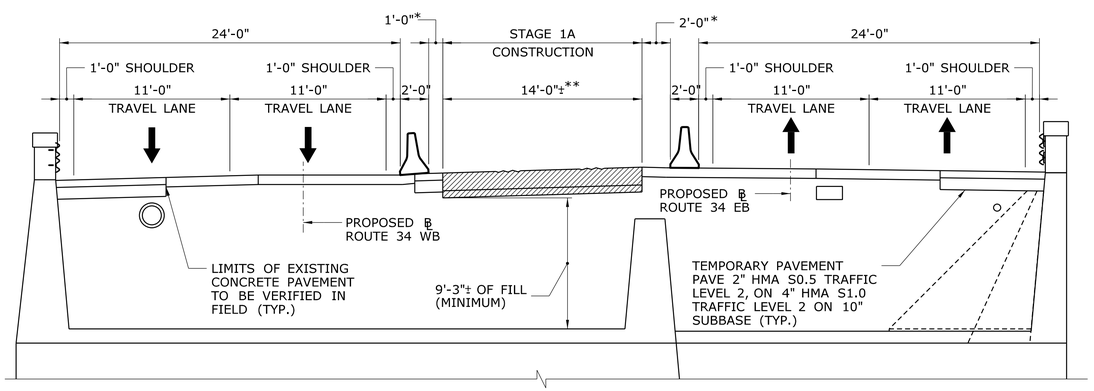

* VARIES DUE TO BRIDGE GEOMETRY

** VARIES DUE TO LIMITS OF EXISTING CONCRETE PAVEMENT

STAGE 1A

SCALE: 3/16" = 1'-0"

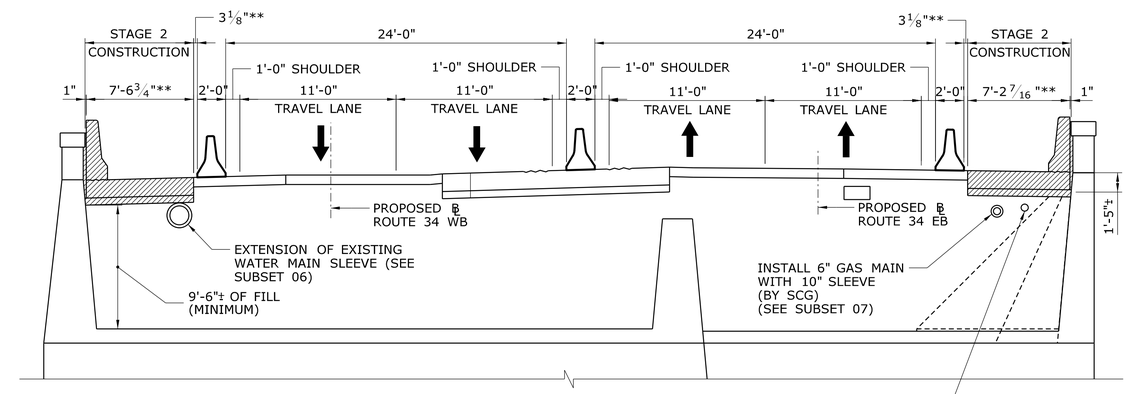

* VARIES DUE TO BRIDGE GEOMETRY

** VARIES DUE TO LIMITS OF EXISTING CONCRETE PAVEMENT

STAGE 2

SCALE: 3/16" = 1'-0"

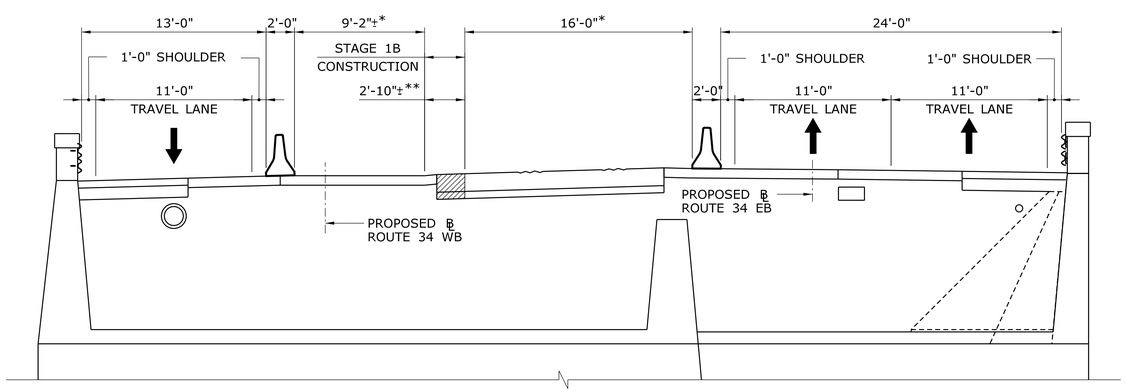

* VARIES DUE TO BRIDGE GEOMETRY

** VARIES DUE TO LIMITS OF EXISTING CONCRETE PAVEMENT

STAGE 1B

SCALE: 3/16" = 1'-0"

NOTES:

1. SEE STRUCTURE SHEET CONSTRUCTION STAGING - 2 FOR THE REMAINING STAGES AND SUGGESTED SEQUENCE OF CONSTRUCTION.
2. SEE TRAFFIC SUBSET FOR ADDITIONAL MAINTENANCE AND PROTECTION OF TRAFFIC DETAILS AND REQUIREMENTS
3. DURING REMOVAL OF THE EXISTING OVERLAY AND FILL, THE CONTRACTOR SHALL TAKE ADEQUATE MEASURES TO PREVENT ANY DEBRIS FROM ENTERING INTO THE ADJACENT ROADWAY OR DROPPING INTO AREAS BELOW THE STRUCTURE.
4. THE CONTRACTOR SHALL INSPECT THE EXISTING BRIDGE PERIODICALLY DURING THE STAGE CONSTRUCTION AND IMMEDIATELY NOTIFY THE ENGINEER OF ANY DEFICIENCIES NOTED.
5. CONTRACTOR SHALL PROVIDE AND MAINTAIN ADEQUATE PAVEMENT TRANSITIONS AS REQUIRED BY SPECIAL PROVISIONS.

REV.	DATE	REVISION DESCRIPTION	SHEET NO.

THE INFORMATION, INCLUDING ESTIMATED QUANTITIES OF WORK, SHOWN ON THESE SHEETS IS BASED ON LIMITED INVESTIGATIONS BY THE STATE AND IS IN NO WAY WARRANTED TO INDICATE THE CONDITIONS OF ACTUAL QUANTITIES OF WORK WHICH WILL BE REQUIRED.

Plotted Date: 11/28/2018

DESIGNER/DRAFTER: JJF

CHECKED BY: AML

SCALE AS NOTED

STATE OF CONNECTICUT
DEPARTMENT OF TRANSPORTATION

Filename: ...\S-04 CONSTRUCTION STAGING - 1.dgn

SIGNATURE/BLOCK:

Stantec Consulting Services Inc.
55 Church Street
Suite 601
New Haven, CT 06510

PROJECT TITLE:

REHABILITATION OF BRIDGE NO. 00948, ROUTE 34 OVER WEPAWAUG RIVER

TOWN: **ORANGE**

DRAWING TITLE: **CONSTRUCTION STAGING - 1**

PROJECT NO. **106-127**

DRAWING NO. **S-04**

SHEET NO. **04.04**

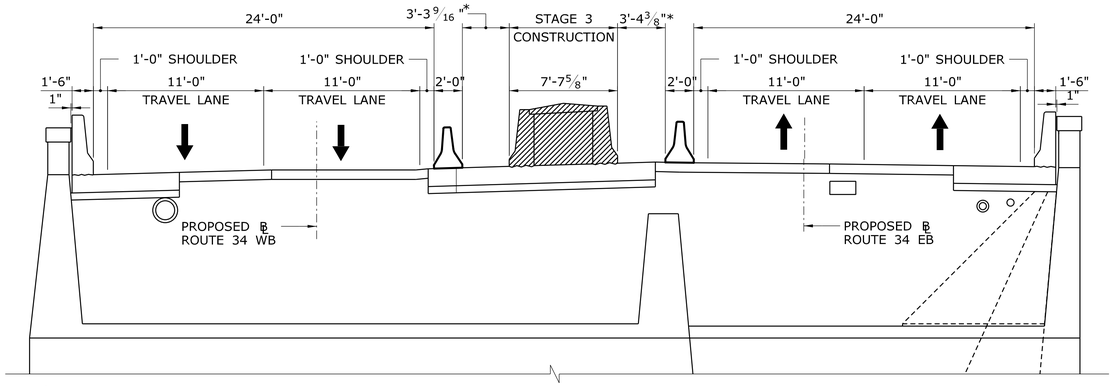

* VARIES DUE TO BRIDGE GEOMETRY

STAGE 3

SCALE: 3/16 " = 1'-0"

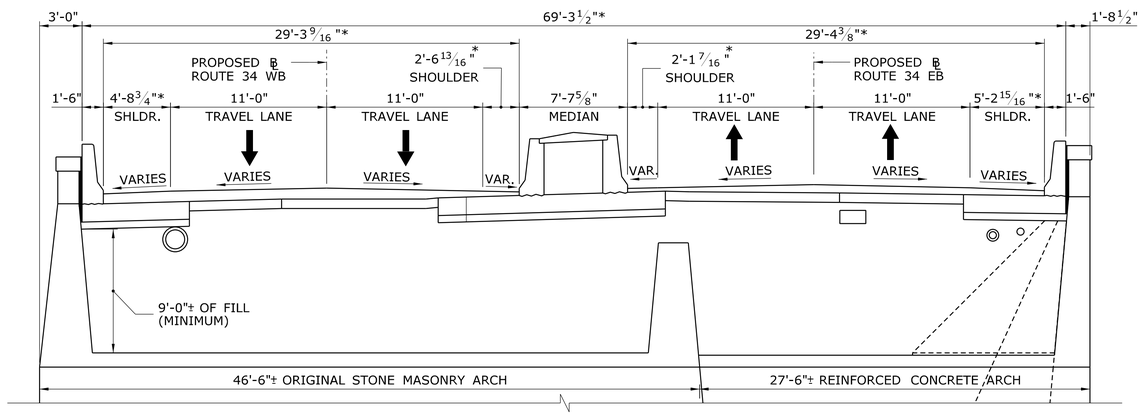

* VARIES DUE TO BRIDGE GEOMETRY

FINAL CONDITION

SCALE: 3/16 " = 1'-0"

SUGGESTED SEQUENCE OF CONSTRUCTION:

PRE-STAGE
1. INSTALL EROSION AND SEDIMENTATION CONTROLS
2. REMOVE HMA OVER THE ARCH AND PERFORM REPAIRS TO CONCRETE PAVEMENT
3. SAWCUT AND REMOVE CONCRETE PAVEMENT STRIP AT UTILITY OVER THE ARCH AND REMOVE EXISTING FILL AS NEEDED AND/OR AS DIRECTED BY THE ENGINEER
4. REMOVE TOP PORTION OF EXISTING COUNTERFORTS AS SHOWN AND CONSTRUCT TEMPORARY SHOULDERS
5. PERFORM FULL DEPTH RECONSTRUCTION AT END OF MEDIAN NEAR MAPLEDALE ROAD (SEE ROADWAY PLAN)

STAGE 1A (MEDIAN)
1. INSTALL TEMPORARY PRECAST CONCRETE BARRIER CURB (STRUCTURE) (T.P.C.B.C.)
2. REMOVE EXISTING OVERLAY, MEDIAN, AND MEDIAN GUIDERAILS
3. DETERMINE LIMITS OF EXISTING REINFORCED CONCRETE PAVEMENT
4. REPAIR AREAS OF DELAMINATED CONCRETE ALONG THE TOP OF THE EXISTING REINFORCED CONCRETE PAVEMENT
5. PLACE TEMPORARY PAVEMENT ALONG EXPOSED AREAS OF MEDIAN AT EACH APPROACH AS NEEDED
6. SAWCUT EXISTING REINFORCED CONCRETE PAVEMENT AS NEEDED AND/OR AS DIRECTED BY THE ENGINEER
7. REMOVE REINFORCED CONCRETE PAVEMENT AND FILL AS SHOWN
8. PLACE 6" GRANULAR FILL OVER EXISTING FILL
9. CONSTRUCT CAST-IN-PLACE CONCRETE SLAB

STAGE 1B (IF NEEDED DUE TO EXISTING CONCRETE PAVEMENT LIMITS)
1. RELOCATE T.P.C.B.C. ALONG ROUTE 34 WB
2. REMOVE TEMPORARY PAVEMENT AT MEDIAN AS SHOWN
3. PLACE 6" GRANULAR FILL OVER EXISTING FILL
4. CONSTRUCT REMAINDER OF CAST-IN-PLACE CONCRETE SLAB ALONG ROUTE 34 WB AS SHOWN

STAGE 1C (IF NEEDED DUE TO EXISTING CONCRETE PAVEMENT LIMITS)
1. RELOCATE T.P.C.B.C. ALONG ROUTE 34 EB
2. PLACE 6" GRANULAR FILL OVER EXISTING FILL
3. CONSTRUCT REMAINDER OF CAST-IN-PLACE CONCRETE SLAB ALONG ROUTE 34 EB AS SHOWN

STAGE 2
1. RELOCATE T.P.C.B.C.
2. REMOVE GUIDERAILS ATTACHED TO EXISTING PARAPETS
4. EXISTING WATER MAIN SLEEVE TO BE EXTENDED BY SCCRWA
5. REMOVE TOP PORTION OF COUNTERFORTS AS SHOWN
6. EXISTING GAS MAIN TO BE CAPPED AND REPLACED WITH NEW 6" GAS MAIN WITH 10" SLEEVE (BY SCG)
6. PLACE 6" GRANULAR FILL OVER EXISTING FILL
7. CONSTRUCT CAST-IN-PLACE CONCRETE SLABS AND PARAPETS

STAGE 3
1. RELOCATE T.P.C.B.C.
2. CONSTRUCT NEW MEDIAN AS SHOWN

FINAL STAGE
1. REMOVE T.P.C.B.C.
2. ESTABLISH TEMPORARY TRAFFIC PATTERNS AS PER MP&T SPECIAL PROVISIONS AS NEEDED
3. PERFORM ANY ADDITIONAL REPAIRS TO EXISTING CONCRETE PAVEMENT AS NEEDED
4. PLACE PAVEMENT AS DIRECTED BY THE ENGINEER
5. REMOVE TEMPORARY TRAFFIC PATTERNS AND ESTABLISH FINAL TRAFFIC PATTERNS
6. REMOVE EROSION AND SEDIMENTATION CONTROL UPON PERMANENT STABILIZATION

NOTES:

1. SEE TRAFFIC SUBSET FOR ADDITIONAL MAINTENANCE AND PROTECTION OF TRAFFIC DETAILS AND REQUIREMENTS
2. DURING REMOVAL OF THE EXISTING OVERLAY AND FILL, THE CONTRACTOR SHALL TAKE ADEQUATE MEASURES TO PREVENT ANY DEBRIS FROM ENTERING INTO THE ADJACENT ROADWAY OR DROPPING INTO AREAS BELOW THE STRUCTURE.
3. THE CONTRACTOR SHALL INSPECT THE EXISTING BRIDGE PERIODICALLY DURING THE STAGE CONSTRUCTION AND IMMEDIATELY NOTIFY THE ENGINEER OF ANY DEFICIENCIES NOTED.
4. THE CONTRACTOR SHALL BE PERMITTED TO IMPLEMENT STAGE 1B AND STAGE 1C DURING WEEKEND HOURS, DEFINED AS THE 56 CONSECUTIVE HOURS BETWEEN 9 P.M. FRIDAY AND 5 A.M. OF THE NEXT SUCCESSIVE MONDAY. THE CONTRACTOR SHALL ALSO BE PERMITTED TO COMPETE STAGE 1B AND STAGE 1C CONCURRENTLY.

REV.	DATE	REVISION DESCRIPTION	SHEET NO.

THE INFORMATION, INCLUDING ESTIMATED QUANTITIES OF WORK, SHOWN ON THESE SHEETS IS BASED ON LIMITED INVESTIGATIONS BY THE STATE AND IS IN NO WAY WARRANTED TO INDICATE THE CONDITIONS OF ACTUAL QUANTITIES OF WORK WHICH WILL BE REQUIRED.

Plotted Date: 11/28/2018

DESIGNER/DRAFTER: JJF
CHECKED BY: AML
SCALE AS NOTED

STATE OF CONNECTICUT
DEPARTMENT OF TRANSPORTATION

Filename: ...\S-05 CONSTRUCTION STAGING - 2.dgn

SIGNATURE/BLOCK:

Stantec Consulting Services Inc.
55 Church Street
Suite 601
New Haven, CT 06510

PROJECT TITLE:
REHABILITATION OF BRIDGE NO. 00948, ROUTE 34 OVER WEPAWAUG RIVER

TOWN: **ORANGE**

DRAWING TITLE: **CONSTRUCTION STAGING - 2**

PROJECT NO. 106-127
DRAWING NO. S-05
SHEET NO. 04.05

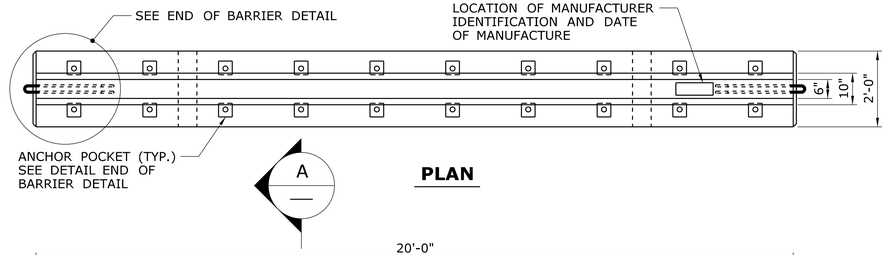

PLAN

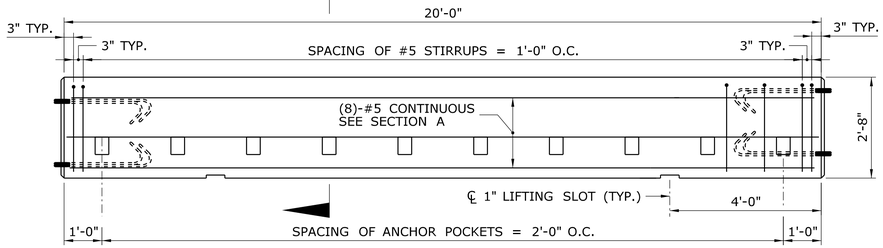

ELEVATION

PRECAST BARRIER UNIT (STRUCTURE) DETAILS

SCALE: ½" = 1'-0"

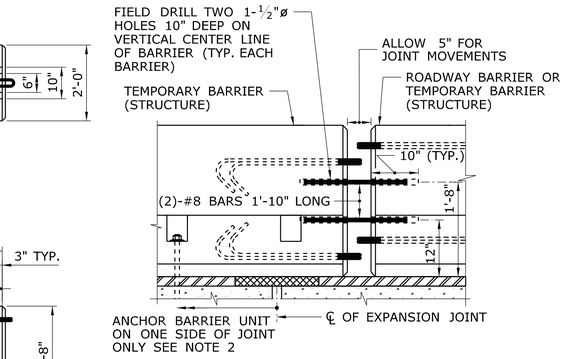

ELEVATION - BARRIER CONNECTION DETAILS AT EXPANSION JOINTS (CASE II SHOWN)

SCALE: ¾" = 1'-0"

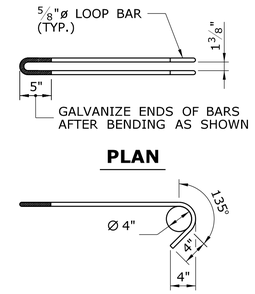

PLAN

ELEVATION

LOOP BAR DETAILS

SCALE: 1" = 1'-0"

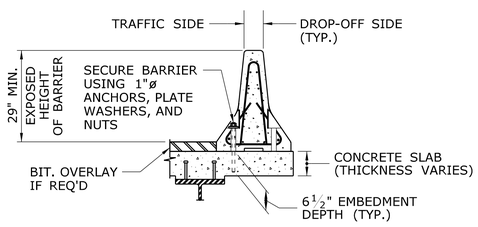

BARRIER ON CONCRETE

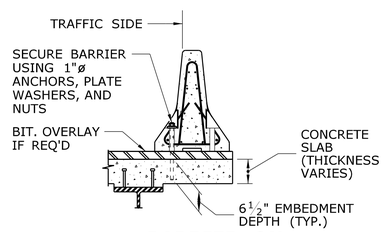

BARRIER ON BIT. OVERLAY

CHEMICAL ANCHORING OPTION

(SEE T.P.C.B.C. NOTE 1B)

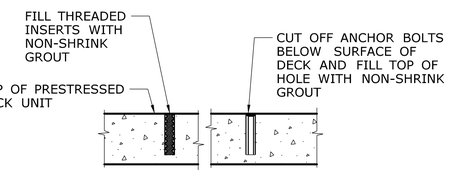

ANCHOR HOLE DETAILS

SCALE: 1" = 1'-0"

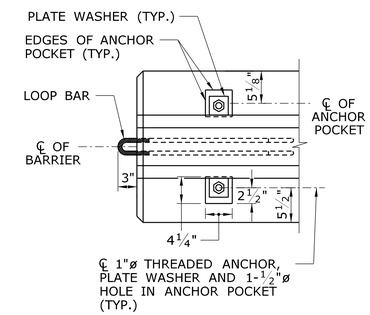

PLAN - END OF BARRIER DETAIL

SCALE: 1" = 1'-0"

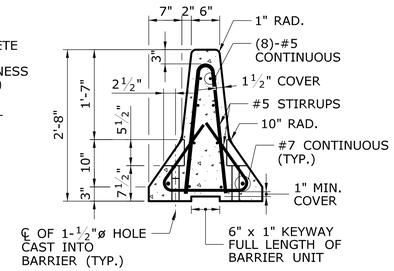

SECTION A

SCALE: ¾" = 1'-0"

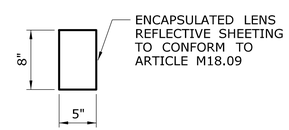

DELINEATOR DETAIL

N.T.S.

BARRIER CONNECTION NOTES:

1. PLAIN CIRCULAR STEEL WASHERS SHALL BE MANUFACTURED WITH THE FOLLOWING DIMENSIONS:

   OUTSIDE DIAMETER = 2-3/4" (+1/4", -0")
   INSIDE DIAMETER = 1-1/4" (±1/16")
   THICKNESS = 3/16"

2. THE NUTS ON THE CONNECTION ROD SHALL BE TURNED UNTIL THE BOTTOM WASHER IS DRAWN UP AGAINST THE LOOP BAR. THE LOOP BARS SHALL NOT BE BENT DUE TO THE TIGHTENING PROCESS.

3. FOR EASE OF REMOVAL, THE THREADS ON THE CONNECTION RODS AND NUTS SHALL BE WAXED.

TEMPORARY PRECAST CONCRETE BARRIER CURB NOTES:

1. THE TEMPORARY BARRIER SHOWN ON THIS SHEET SHALL BE ANCHORED ONTO BRIDGE DECKS (SEE "TEMPORARY ANCHORAGE SYSTEM") WHEN IT IS USED TO PROTECT A VERTICAL DROP-OFF. THE TEMPORARY ANCHORAGE SYSTEM SHALL CONFORM TO THE FOLLOWING:

   A) PRESTRESSED DECK UNITS: THREADED INSERTS SHALL BE USED FOR SECURING TEMPORARY BARRIER (STRUCTURE) TO PRESTRESSED DECK UNITS. THE THREADED INSERTS SHALL BE CAST INTO THE DECK UNITS DURING FABRICATION AND SHALL BE LOCATED AS REQUIRED TO ACCOMMODATE THE STAGE CONSTRUCTION. SEE SPECIAL PROVISIONS FOR ADDITONAL INFORMATION.

   B) CHEMICAL ANCHORING: THIS CONSISTS OF DRILLING HOLES IN NEW OR EXISTING CONRETE, PLACING THREADED ANCHORS IN THE HOLES, AND SECURING THE ANCHORS WITH A PRE-APPROVED CHEMICAL ANCHOR MATERIAL WHICH CONFORMS TO M.03.01-15 OF THE STANDARD SPECIFICATIONS. HOLE DIAMETER SHALL BE DETERMINED BY THE MANUFACTURER OF THE CHEMICAL ANCHORING MATERIAL.

   C) THROUGH-BOLTING: THIS CONSISTS OF DRILLING THROUGH DECK SLABS AND SECURING REMOVABLE ANCHORS ON THE UNDERSIDE WITH PLATE WASHERS AND NUTS. THROUGH BOLTING IS NOT PREMITTED ON NEW CONSTRUCTION OR PRESTRESSED CONCRETE. MAXIMUM HOLE SIZE IN SLAB = 1-1/2".

2. NUMBER OF ANCHORS: ON THE TRAFFIC SIDE OF A TYPICAL BARRIER, ANCHORS SHALL BE INSTALLED IN ALL POCKETS. AT BARRIER UNITS WHICH STRADDLE BRIDGE EXPANSION JOINTS THE ANCHOR AND CONNECTION DETAILS SHALL CONFORM TO TABLE "A".

3. THE WORK DONE ON THIS SHEET, WITH THE EXCEPTION OF THE DELINEATORS, SHALL BE PAID FOR UNDER THE ITEM "TEMPORARY PRECAST CONCRETE BARRIER CURB (STRUCTURE)".

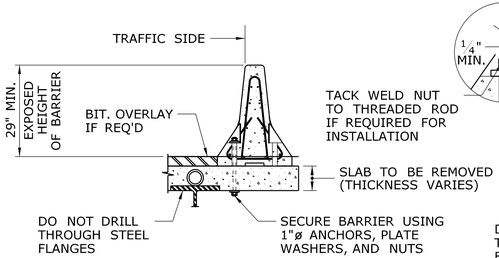

BARRIER ON CONCRETE

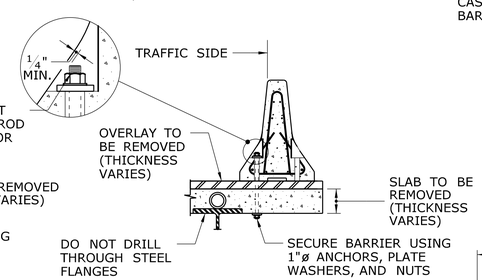

BARRIER ON BIT. OVERLAY

THRU-BOLTING OPTION

(SEE T.P.C.B.C. NOTE 1C)

DETAIL NOTES:

1. FOR ANCHORING INTO DECK UNITS SEE T.P.C.B.C. NOTE 1A.
2. EXISTING REINFORCING BARS IN SLAB NOT DRAWN FOR CLARITY. AVOID DAMAGING THE REINFORCING BARS IN ALL NEWLY CONSTRUCTED SLABS.

TEMPORARY ANCHORAGE SYSTEM DETAILS

SCALE: ½" = 1'-0"

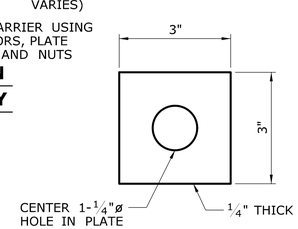

PLATE WASHER DETAIL

N.T.S.

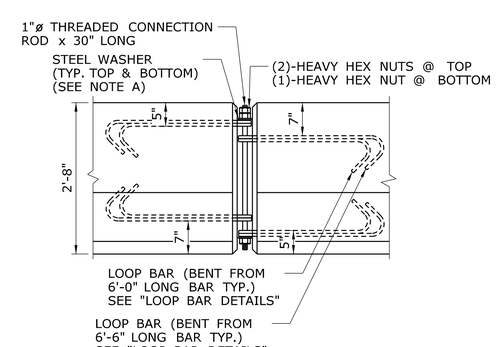

ELEVATION - BARRIER CONNECTION DETAIL

SCALE: ¾" = 1'-0"

TABLE "A": BARRIER UNITS AT EXPANSION JOINTS

CASE	SPAN LENGTH CONTRIBUTING TO MOVEMENT AT THE EXPANSION JOINT.	METHOD OF END CONNECTION TO ABUTTING BARRIER UNIT. (WHERE MOVEMENT WILL OCCUR)	ANCHOR REQUIREMENTS FOR THE BARRIER UNIT WHICH STRADDLES THE BRIDGE JOINT
I.	UP TO 100'	USE 1" CONNECTION ROD BUT DO NOT OVER TIGHTEN THE NUTS AND ALLOW ROOM FOR EXPANSION AROUND THE RODS AND LOOPS.	ON ONE SIDE OF THE JOINT ONLY, INSTALL AS MANY ANCHORS AS POSSIBLE ON THE TRAFFIC SIDE OF THE BARRIER. ON THE OTHER SIDE OF THE JOINT DO NOT INSTALL ANCHORS.
II.	100' TO 400'	FIELD DRILL HOLES IN ENDS OF BOTH UNITS AND CONNECT WITH 2-#8 BARS. FOR DETAILS, SEE "BARRIER CONNECTION DETAILS".	ON ONE SIDE OF THE JOINT ONLY, INSTALL A TOTAL OF 10 ANCHORS. FILL THE POCKETS ON THE TRAFFIC SIDE BEFORE FILLING THE POCKETS ON THE DROP-OFF SIDE. IF THIS CANNOT BE ACHIEVED SEE III BELOW.
III.	OVER 400' AND BARRIER LAYOUTS WHICH DO NOT SATISFY II.	TO BE DESIGNED BY CONTRACTOR AND REVIEWED BY ENGINEER. COST OF DESIGNING AND FURNISHING SPECIAL BARRIER UNITS OR ATTACHMENTS PAID FOR UNDER "TPCBC (STRUCTURE)".	TO BE DESIGNED BY CONTRACTOR AND REVIEWED BY ENGINEER. COST OF DESIGNING AND FURNISHING SPECIAL BARRIER UNITS OR ATTACHMENTS PAID FOR UNDER "TPCBC (STRUCTURE)".

REV.	DATE	REVISION DESCRIPTION	SHEET NO.

THE INFORMATION, INCLUDING ESTIMATED QUANTITIES OF WORK, SHOWN ON THESE SHEETS IS BASED ON LIMITED INVESTIGATIONS BY THE STATE AND IS IN NO WAY WARRANTED TO INDICATE THE CONDITIONS OF ACTUAL QUANTITIES OF WORK WHICH WILL BE REQUIRED.

Plotted Date: 11/28/2018

DESIGNER/DRAFTER: JJF
CHECKED BY: -
SCALE AS NOTED

STATE OF CONNECTICUT
DEPARTMENT OF TRANSPORTATION

Filename: ...\Struct_Bridge\S-06 TPCBC.dgn

SIGNATURE/BLOCK:
Stantec Consulting Services Inc.
55 Church Street
Suite 601
New Haven, CT 06510

PROJECT TITLE:
REHABILITATION OF BRIDGE NO. 00948, ROUTE 34 OVER WEPAWAUG RIVER

TOWN: **ORANGE**

DRAWING TITLE: **TEMP. PRECAST CONC. BARRIER CURB (STRUCT.)**

PROJECT NO. 106-127
DRAWING NO. S-06
SHEET NO. 04.06

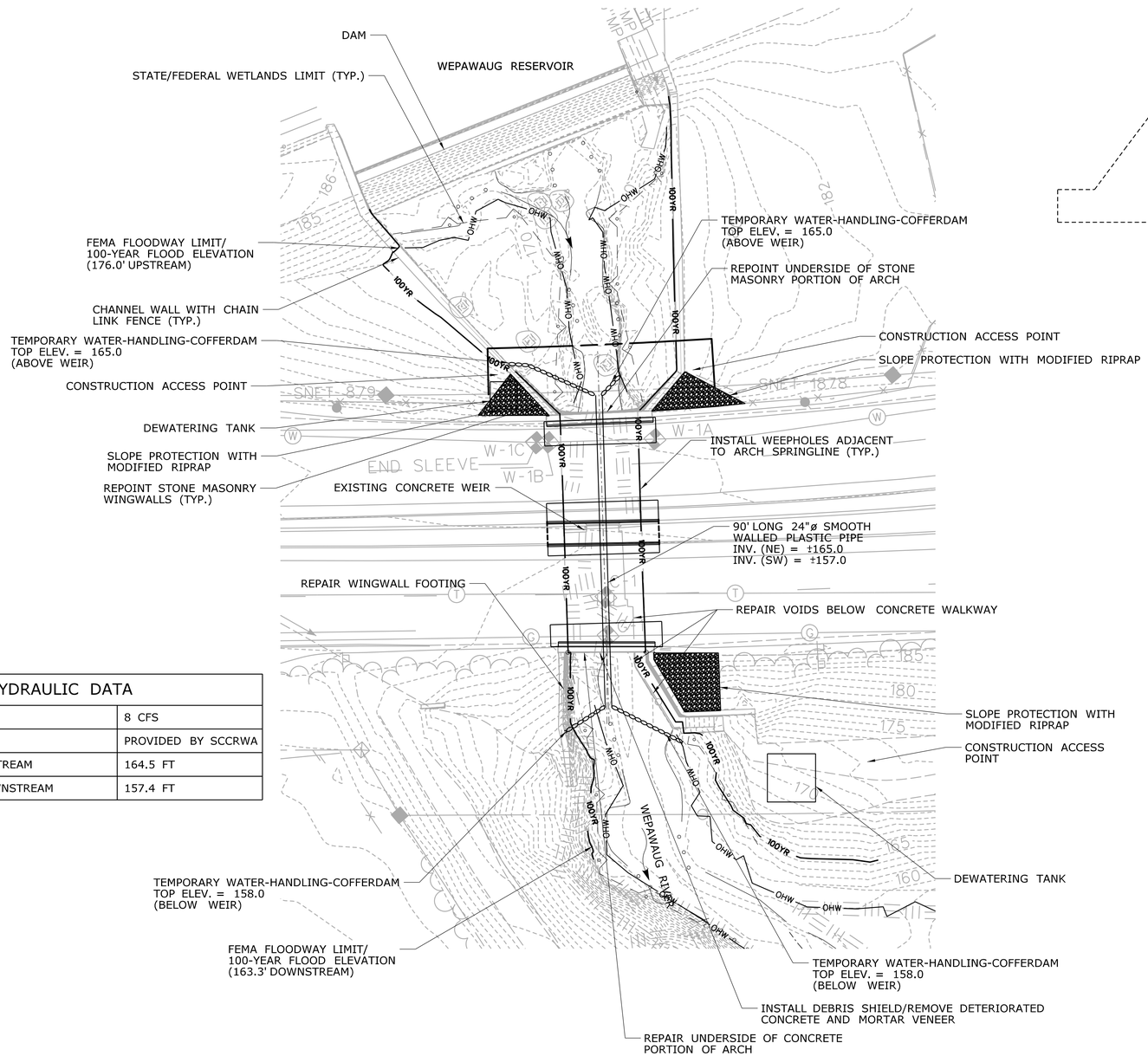

PLAN

SCALE: 1" = 20'-0"

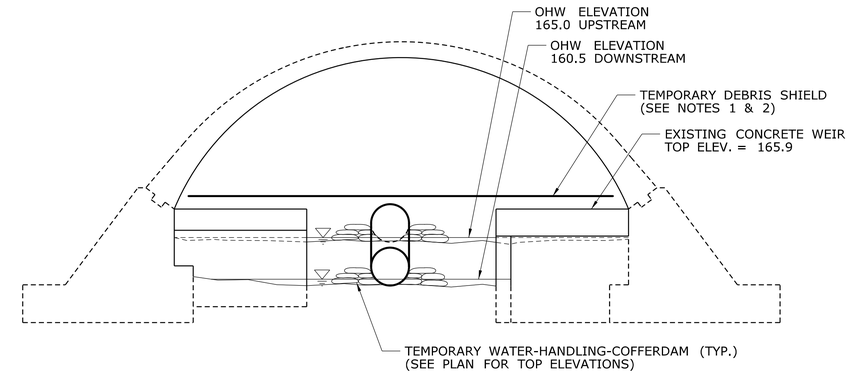

CHANNEL SECTION

NOT TO SCALE

TEMPORARY HYDRAULIC DATA	
TEMPORARY DESIGN DISCHARGE	8 CFS
TEMPORARY DESIGN FREQUENCY	PROVIDED BY SCCRWA
TEMPORARY WATER SURFACE EL. UPSTREAM	164.5 FT
TEMPORARY WATER SURFACE EL. DOWNSTREAM	157.4 FT

TEMPORARY FLOW DIVERSION PIPE NOTES:

1. PIPE TO BE SMOOTH WALLED INTERIOR AND FLEXIBLE TO NAVIGATE THE FLOW LINE THROUGH THE WORK AREA.
2. BRACING WILL BE REQUIRED AT VARIOUS POINTS ALONG THE PIPE FOR STABILIZATION THROUGH THE WORK AREA.

TEMPORARY DEBRIS SHEILD NOTES:

1. TEMPORARY DEBRIS SHIELD TO BE REMOVED UPON COMPLETION OF WORK EACH DAY, AND/OR PRIOR TO ANY FORECASTED SEVERE STORM EVENT.
2. THE DEBRIS SHIELD SHALL PROTECT THE ENTIRE STREAM BED AREA BENEATH THE STRUCTURE AND SHALL BE AS SPECIFIED IN ITEM NO. 0602971A.

SUGGESTED SEQUENCE OF CONSTRUCTION:

REPAIR TO THE UNDERSIDE OF ARCH AND SUBSTRUCTURE CAN BE PERFORMED FROM BELOW WHILE MAINTAINING EXISTING TRAFFIC PATTERNS. SEE DRAWING NOS. S-08 AND S-09 FOR ADDITIONAL ARCH REPAIR DETAILS AND REQUIREMENTS.

DURING REMOVAL OF EXISTING DETERIORATED CONCRETE AND MORTAR VENEER FROM THE ARCH UNDERSIDE, THE CONTRACTOR SHALL TAKE ADEQUATE MEASURES TO PREVENT ANY DEBRIS FROM ENTERING INTO THE WATERCOURSE. THE CONTRACTOR SHALL DESIGN AND INSTALL A TEMPORARY DEBRIS SHIELD. THE COST OF WHICH SHALL BE INCLUDED IN THE ITEM "DEBRIS SHIELD".

1. INSTALL TEMPORARY WATER-HANDLING-COFFERDAM AROUND THE WINGWALLS AND INSTALL TEMPORARY FLOW DIVERSION PIPE AS SHOWN ON THE PLAN.
2. DIVERT WATER FROM WORK AREA BEHIND TEMPORARY WATER-HANDLING-COFFERDAM AS REQUIRED FOR REPAIRS.
3. REPAIR SUBSTRUCTURE TO THE SATISFACTION OF THE ENGINEER.
4. INSTALL TEMPORARY DEBRIS SHIELD BELOW EXISTING SPRINGLINE OF ARCH.
5. REMOVE DETERIORATED CONCRETE ALONG UNDERSIDE OF THE CONCRETE PORTION OF THE ARCH AND THE MORTAR VENEER ALONG THE UNDERSIDE OF THE STONE MASONRY PORTION OF THE ARCH.
6. REPAIR THE UNDERSIDE OF THE ARCH TO THE SATISFACTION OF THE ENGINEER.
7. REMOVE TEMPORARY DEBRIS SHIELD AND TEMPORARY WATER-HANDLING-COFFERDAM.

GENERAL NOTES:

1. IN CONJUNCTION WITH THE ENGINEER, COORDINATE WITH THE SOUTH CENTRAL CONNECTICUT REGIONAL WATER AUTHORITY (SCCRWA) TO RESTRICT FLOW FROM THE WEPAWAUG RESERVOIR DAM.
2. TEMPORARY WATER-HANDLING-COFFERDAM FOR CONTROL OF THE FLOW THROUGH THE BRIDGE SITE SHALL BE AS SHOWN ON THE PLANS OR AS REQUIRED BASED ON FLOWS RESULTING FROM COORDINATION WITH SCCRWA.
3. ACCESS TO REPAIR THE SOUTHWEST WINGWALL FOOTING SHALL BE MADE AT THE CONSTRUCTION ACCESS POINT AT THE NORTHWEST CORNER.

REV.	DATE	REVISION DESCRIPTION	SHEET NO.
-	-	-	-
-	-	-	-
-	-	-	-
-	-	-	-
-	-	-	-
-	-	-	-

THE INFORMATION, INCLUDING ESTIMATED QUANTITIES OF WORK, SHOWN ON THESE SHEETS IS BASED ON LIMITED INVESTIGATIONS BY THE STATE AND IS IN NO WAY WARRANTED TO INDICATE THE CONDITIONS OF ACTUAL QUANTITIES OF WORK WHICH WILL BE REQUIRED.

Plotted Date: 11/28/2018

DESIGNER/DRAFTER: JJF
CHECKED BY: AML
SCALE AS NOTED

STATE OF CONNECTICUT
DEPARTMENT OF TRANSPORTATION

Filename: ...\S-07 WATER HANDLING PLAN.dgn

SIGNATURE/BLOCK:
Stantec Consulting Services Inc.
55 Church Street
Suite 601
New Haven, CT 06510

PROJECT TITLE:
REHABILITATION OF BRIDGE NO. 00948, ROUTE 34 OVER WEPAWAUG RIVER

TOWN: ORANGE

DRAWING TITLE: WATER HANDLING PLAN

PROJECT NO. 106-127
DRAWING NO. S-07
SHEET NO. 04.07

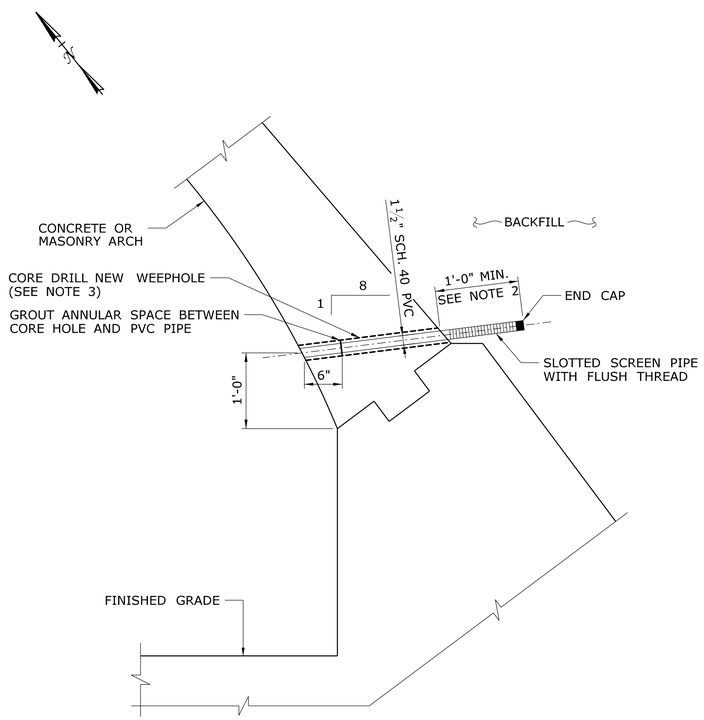

PROPOSED WEEPHOLE DETAIL

SCALE: 1" = 1'-0"

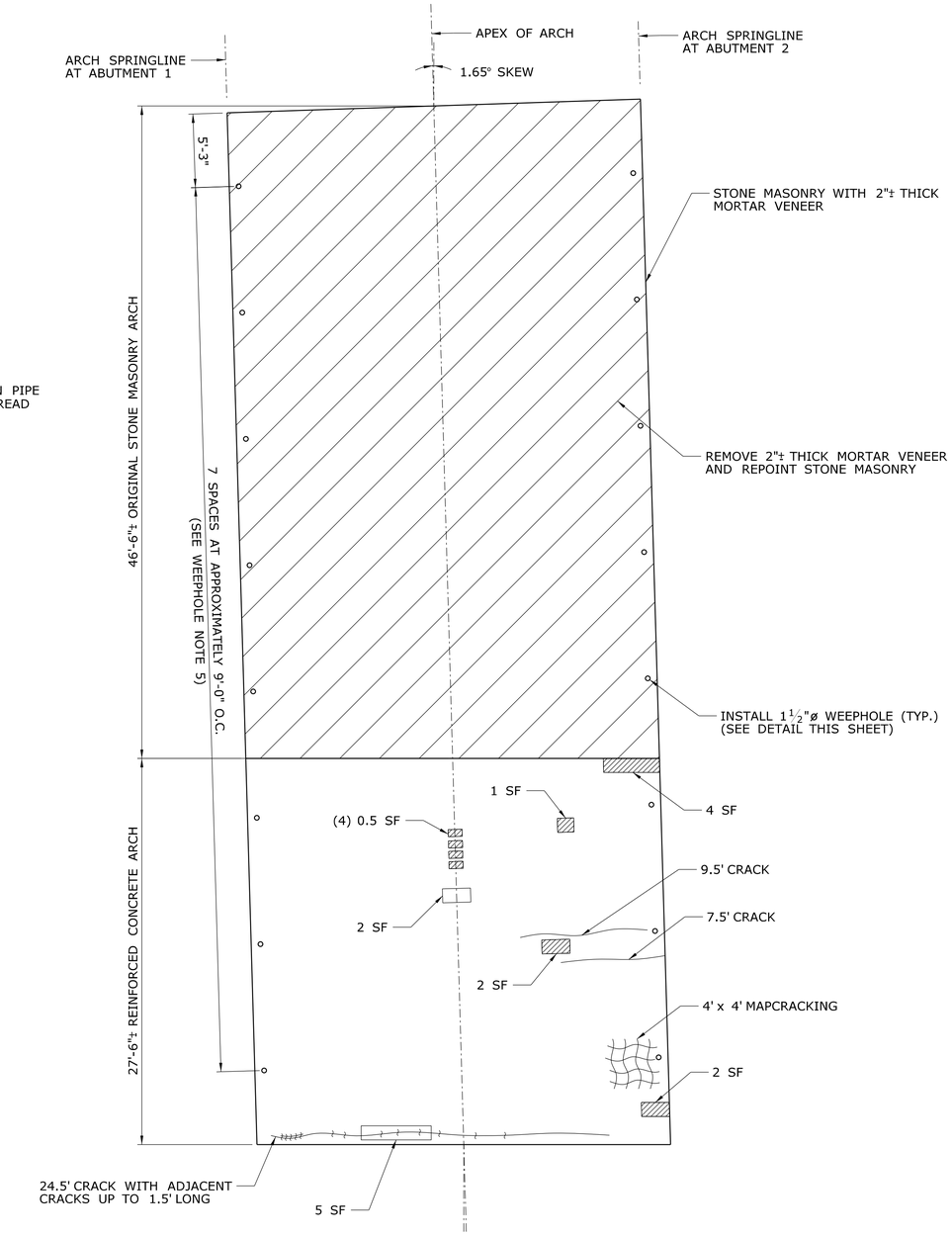

REFLECTED PLAN (DEVELOPED ALONG ARCH)

SCALE: 3/16" = 1'-0"

UNDERSIDE OF ARCH REPAIR NOTES:

1. EPOXY COATING OF THE ARCH UNDERSIDE REINFORCEMENT FOR THE CONCRETE PORTION SHALL BE PERFORMED IN ACCORDANCE WITH DETAILS SHOWN ON THIS SHEET AND THE SPECIAL PROVISIONS. THIS WORK SHALL BE PAID FOR UNDER THE ITEM "CLEAN AND COAT EXPOSED REINFORCING STEEL" (SEE SPECIAL PROVISIONS).
2. THE EXISTING CONCRETE PORTION OF THE ARCH UNDERSIDE SHALL BE SOUNDED FOR HOLLOW AREAS OF CONCRETE BY THE ENGINEER. THE CONTRACTOR SHALL PROVIDE SAFE ACCESS TO THE ENGINEER FOR DELINEATION AND INSPECTION OF THE ARCH UNDERSIDE, AND THE REPAIR WORK. THE COST OF PROVIDING ACCESS FOR THE INSPECTION SHALL BE INCLUDED IN THE COST OF THE ITEM "CLEAN AND COAT EXPOSED REINFORCING STEEL".
3. ALL EXPOSED REINFORCING STEEL SHALL BE THOROUGHLY CLEANED TO REMOVE ANY DEBRIS OR RESIDUE BEFORE APPLYING THE EPOXY COATING (SEE SPECIAL PROVISION).
4. ANY EXPOSED REINFORCING STEEL IN THE AREAS OF POP-OUTS CAUSED BY THE REMOVAL OF DETERIORATED CONCRETE SHALL BE CLEANED AND COATED WITH EPOXY RESIN COATING.
5. THE EXISTING ARCH UNDERSIDE FOR THE STONE MASONRY PORTION HAS A MORTAR VENEER THAT SHALL BE BUSH HAMMERED OFF OF THE STONE MASONRY. THE CONTRACTOR SHALL PROVIDE SAFE ACCESS TO THE ENGINEER FOR DELINEATION AND INSPECTION OF THE STONE MASONRY AND ADJACENT JOINTS. THE CONTRACTOR SHALL REPAIR ALL DETERIORATED JOINTS AND REPOINT THE STONE MASONRY TO THE SATISFACTION OF THE ENGINEER. THE COST OF PROVIDING ACCESS FOR THE INSPECTION SHALL BE INCLUDED IN THE COST OF THE APPLICABLE REPAIR ITEM.
6. THE UNDERSIDE OF ARCH DETERIORATION AND REPAIR QUANTITIES ARE BASED ON LIMITED FIELD OBSERVATIONS AND BRIDGE SAFETY INSPECTION REPORTS. THE EXACT LOCATION AND LIMITS OF DETERIORATED JOINTS, CRACKS, HOLLOW AREAS, SPALLS AND EXPOSED REINFORCEMENT IN THE ARCH UNDERSIDE SHALL BE DETERMINED BY THE ENGINEER DURING CONSTRUCTION (SEE SPECIAL PROVISIONS).
7. THE CONTRACTOR SHALL NOT PERFORM ANY REPAIR WORK WITHOUT PRIOR APPROVAL FROM THE ENGINEER. THE REMOVAL OF DETERIORATED CONCRETE SHALL PROCEED AS DIRECTED BY THE ENGINEER.
8. THE PRIMARY REPAIR IS TO APPLY EPOXY COATING TO THE EXPOSED REINFORCING STEEL AT THE UNDERSIDE OF ARCH. IF THE REMOVAL OF DETERIORATED CONCRETE EXTENDS GREATER THAN 3" IN DEPTH, OR IF THE REMOVAL EXPOSES THE FULL CIRCUMFERENCE OF THE REINFORCING STEEL BAR FOR A LENGTH EXCEEDING 12", THE WORK SHALL BE STOPPED AND THE ENGINEER SHALL BE NOTIFIED IMMEDIATELY.
9. SEE DRAWING S-09 FOR REPAIR DETAILS.

SUGGESTED SEQUENCE OF CONSTRUCTION:

1. INSTALL TEMPORARY DEBRIS SHIELD.
2. INSPECT AND REMOVE DETERIORATED CONCRETE ALONG THE UNDERSIDE OF THE CONCRETE ARCH PORTION.
3. REMOVE THE MORTAR VENEER ALONG THE UNDERSIDE OF THE STONE MASONRY ARCH PORTION.
4. CLEAN ALL EXPOSED REINFORCING STEEL AND APPLY EPOXY COATING. IF DEPTH OF DETERIORATED CONCRETE IS GREATER THAN 3", OR REINFORCING STEEL IS EXPOSED FULL CIRCUMFERENCE FOR A LENGTH EXCEEDING 12", THE WORK SHALL BE STOPPED AND THE ENGINEER SHALL BE NOTIFIED IMMEDIATELY (SEE UNDERSIDE OF ARCH REPAIR NOTES 6 AND 8).
5. REPAIR ALL JOINTS AND REPOINT STONE MASONRY (SEE UNDERSIDE OF ARCH REPAIR NOTE 5).
6. INSTALL WEEPHOLES ADJACENT TO THE SPRINGLINE AT EACH ABUTMENT AS SHOWN (SEE "PROPOSED WEEPHOLE DETAIL" THIS SHEET).
7. REMOVE TEMPORARY DEBRIS SHIELD.

WEEPHOLE NOTES:

1. LENGTH OF PROPOSED PVC WEEP PIPE IN CONTACT WITH BACKFILL SHALL BE SLOTTED.
2. THE PROPOSED PVC WEEP PIPE SHALL EXTEND TO A MINIMUM OF 1'-0" INTO THE EXISTING BACKFILL.
3. THE CORE SHALL BE DRILLED TO THE MINIMUM DIAMETER NECESSARY TO ALLOW INSTALLATION OF THE PROPOSED PVC WEEP PIPE.
4. CORING OPERATIONS SHALL BE COMPLETED PRIOR TO ANY PATCHING AND/OR REPAIR WORK.
5. EXACT LOCATION OF WEEPHOLE LOCATIONS TO BE DETERMINED IN FIELD BY THE ENGINEER. WEEPHOLES IN THE STONE MASONRY PORTION OF THE ARCH SHOULD BE LOCATED SUCH THAT DRILLING/CORING OPERATIONS DO NOT DISTURB ADJACENT MASONRY JOINTS.
6. SEE SPECIAL PROVISIONS FOR ADDITIONAL DETAIL AND REQUIREMENTS.

CONCRETE DETERIORATION LEGEND

- CRACK
- HOLLOW AREA
- SPALL

REV.	DATE	REVISION DESCRIPTION	SHEET NO.
-	-	-	-
-	-	-	-
-	-	-	-
-	-	-	-
-	-	-	-
-	-	-	-

THE INFORMATION, INCLUDING ESTIMATED QUANTITIES OF WORK, SHOWN ON THESE SHEETS IS BASED ON LIMITED INVESTIGATIONS BY THE STATE AND IS IN NO WAY WARRANTED TO INDICATE THE CONDITIONS OF ACTUAL QUANTITIES OF WORK WHICH WILL BE REQUIRED.

Plotted Date: 11/28/2018

DESIGNER/DRAFTER: JJF
CHECKED BY: AML
SCALE AS NOTED

STATE OF CONNECTICUT
DEPARTMENT OF TRANSPORTATION

Filename: ...\S-08 UNDERSIDE OF ARCH PLAN.dgn

SIGNATURE/BLOCK:
Stantec Consulting Services Inc.
55 Church Street
Suite 601
New Haven, CT 06510

PROJECT TITLE:
REHABILITATION OF BRIDGE NO. 00948, ROUTE 34 OVER WEPAWAUG RIVER

TOWN: ORANGE

DRAWING TITLE: UNDERSIDE OF ARCH PLAN

PROJECT NO. 106-127
DRAWING NO. S-08
SHEET NO. 04.08

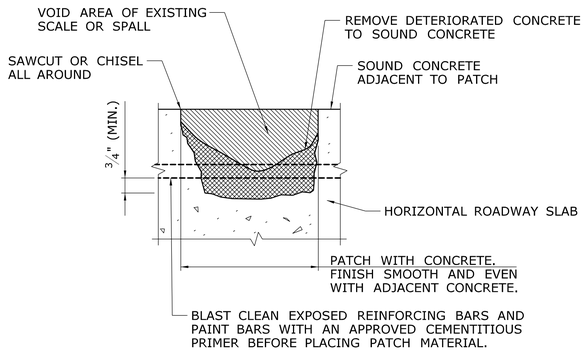

REPAIR OF CONCRETE PAVEMENT (PARTIAL DEPTH PATCH)

SCALE: 3/4" = 1'-0"

** FOR BARS SPACED "LESS THAN" 6" O.C. OR WITH COVER LESS THAN 1.5 TIMES THE BAR DIAMETER, MULTIPLY TABLE VALUES BY 1.25.

TABLE OF SPLICE LENGTHS

	BAR SIZE	MIN. SPLICE LENGTH
** REINFORCEMENT SPACING ≥ 6" O.C. & COVER ≥ 1.5d	#4	1'-7"
	#5	2'-0"
	#6	2'-6"
	#7	3'-5"
	#8	4'-6"
	#9	5'-8"
	#10	7'-2"

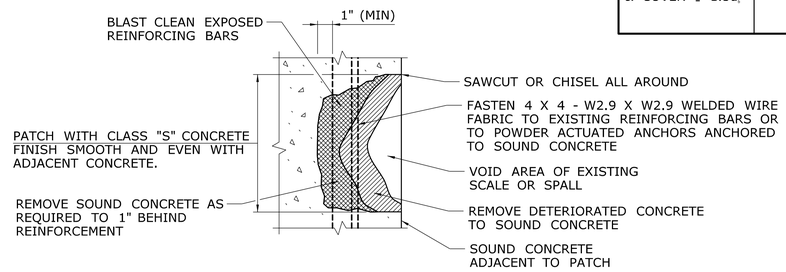

CLASS "S" CONCRETE REPAIR

NOT TO SCALE

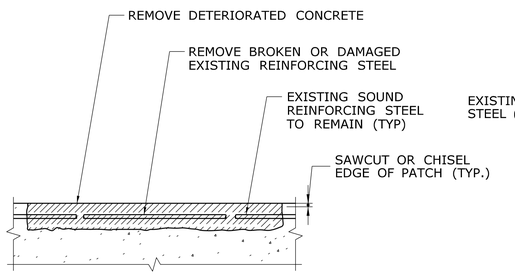

TYPICAL SECTION DAMAGED REINFORCING

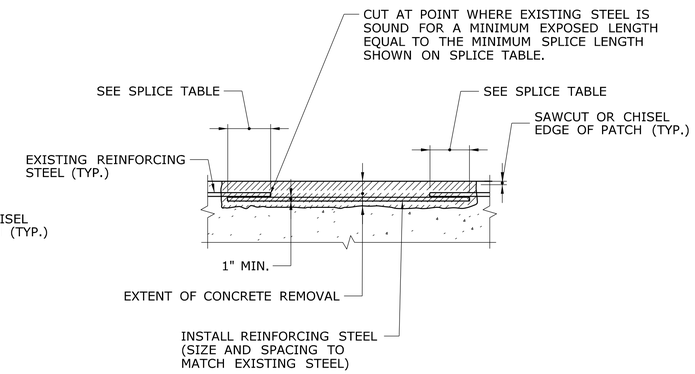

TYPICAL SPLICE DETAIL

REINFORCING REPAIR DETAIL

NOT TO SCALE

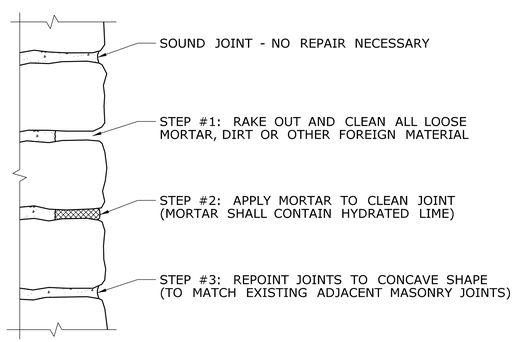

REPOINTED MASONRY DETAIL

NOT TO SCALE

CONCRETE REPAIR NOTES:

THE ENGINEER WILL DETERMINE THE LOCATIONS OF UNSOUND OR DETERIORATED CONCRETE TO BE REPAIRED. THE METHOD USED TO DELINEATE AREAS OF CONCRETE TO BE REPAIRED SHALL NOT PERMANENTLY MARK THE CONCRETE, LEAVE ANY RESIDUE AFTER REMOVAL, OR REQUIRE HARSH CHEMICALS TO REMOVE.

THE CONTRACTOR SHALL REMOVE THE DETERIORATED CONCRETE IN ACCORDANCE WITH THE GUIDELINES SET IN THESE NOTES AND IN THE SPECIAL PROVISIONS. THE ENGINEER WILL DETERMINE THE TYPE OF REPAIR REQUIRED FOR EACH AREA.

THE CONTRACTOR SHALL SUPPLY WHATEVER MEANS NECESSARY, INCLUDING BUT NOT LIMITED TO LADDERS, LIFTS AND TRAFFIC PROTECTION FOR THE ENGINEER TO SAFELY ACCESS VARIOUS AREAS FOR INSPECTION. THE COST OF PROVIDING ACCESS FOR THE INSPECTION IS INCLUDED IN THE COST OF THE APPLICABLE REPAIR ITEM.

CLASS "S" CONCRETE

THIS TYPE OF REPAIR SHALL BE USED WHERE THE REINFORCING BARS ARE SUFFICIENTLY EXPOSED TO ENGAGE AND ANCHOR THE PATCHING MATERIAL. CLASS "S" TYPE CONCRETE MAY BE USED FOR SMALLER AREAS LESS THAN FOUR SQUARE FEET WHERE THERE IS A SUFFICIENT TOTAL AREA TO JUSTIFY THE USE OF THIS MATERIAL AND WHERE THE PATCH CAN BE SECURELY ANCHORED BY THE REINFORCING.

BEFORE APPLYING THE PATCHING MATERIAL, THE REINFORCING BARS SHALL BE BLAST CLEANED.

REINFORCING BAR REPAIRS

REINFORCING WHICH IS DETERMINED BY THE ENGINEER TO BE IN NEED OF REPLACEMENT, SHALL BE REMOVED TO A POINT WHERE IT IS SOUND. THE PATCH SHALL EXTEND A SUFFICIENT DISTANCE BEYOND THIS POINT TO DEVELOP A SPLICE LENGTH SPECIFIED IN THE TABLE ON THIS SHEET.

RESTRICTIONS

THE REMOVAL OF DETERIORATED CONCRETE SHALL PROCEED AS DIRECTED BY THE ENGINEER. IF THE REMOVAL OF DETERIORATED CONCRETE BECOMES EXCESSIVE, THE REMOVAL WORK SHALL BE STOPPED AT THAT LOCATION AND THE ENGINEER NOTIFIED IMMEDIATELY.

MAXIMUM HAMMER SIZE USED TO REMOVE DETERIORATED CONCRETE SHALL BE 15 POUNDS.

IF REMOVAL EXTENDS MORE THAN 1½" BEHIND THE MAIN REINFORCING BARS, THE REMOVAL WORK SHALL BE STOPPED AND THE ENGINEER NOTIFIED IMMEDIATELY.

IF THE AREA OR DEPTH OF REMOVAL IS DEEMED TO BE EXCESSIVE, THE ENGINEER SHALL BE IMMEDIATELY NOTIFIED BEFORE CONTINUING REMOVAL WORK.

PAY ITEM NOTES

1. EPOXY COATING OF EXPOSED REINFORCING STEEL SHALL BE PAID FOR UNDER THE ITEM "CLEAN AND COAT EXPOSED REINFORCING STEEL".
2. CONCRETE REPAIRS TO THE ARCH AND FOOTINGS SHALL BE PAID FOR UNDER THE ITEM "CLASS 'S' CONCRETE".
3. THE 1" DEEP SAW CUT SHALL BE INCLUDED IN THE CONTRACT BID PRICE OF THE APPLICABLE REPAIR PAY ITEM.
4. THE REPAIR OF CONCRETE PAVEMENT ABOVE THE ARCH SHALL BE PAID FOR UNDER THE ITEM "PARTIAL DEPTH PATCH".
5. REINFORCING BARS WILL BE PAID FOR UNDER THEM ITEM "DEFORMED STEEL BARS - EPOXY COATED".

REV.	DATE	REVISION DESCRIPTION	SHEET NO.
-	-	-	-
-	-	-	-
-	-	-	-
-	-	-	-
-	-	-	-
-	-	-	-

THE INFORMATION, INCLUDING ESTIMATED QUANTITIES OF WORK, SHOWN ON THESE SHEETS IS BASED ON LIMITED INVESTIGATIONS BY THE STATE AND IS IN NO WAY WARRANTED TO INDICATE THE CONDITIONS OF ACTUAL QUANTITIES OF WORK WHICH WILL BE REQUIRED.

Plotted Date: 11/28/2018

DESIGNER/DRAFTER: JRA
CHECKED BY: AML
SCALE AS NOTED

STATE OF CONNECTICUT
DEPARTMENT OF TRANSPORTATION

Filename: ...\S-09 REPAIR DETAILS.dgn

SIGNATURE/BLOCK:
Stantec Consulting Services Inc.
55 Church Street
Suite 601
New Haven, CT 06510

PROJECT TITLE:
REHABILITATION OF BRIDGE NO. 00948, ROUTE 34 OVER WEPAWAUG RIVER

TOWN: ORANGE

DRAWING TITLE: REPAIR DETAILS

PROJECT NO. 106-127
DRAWING NO. S-09
SHEET NO. 04.09

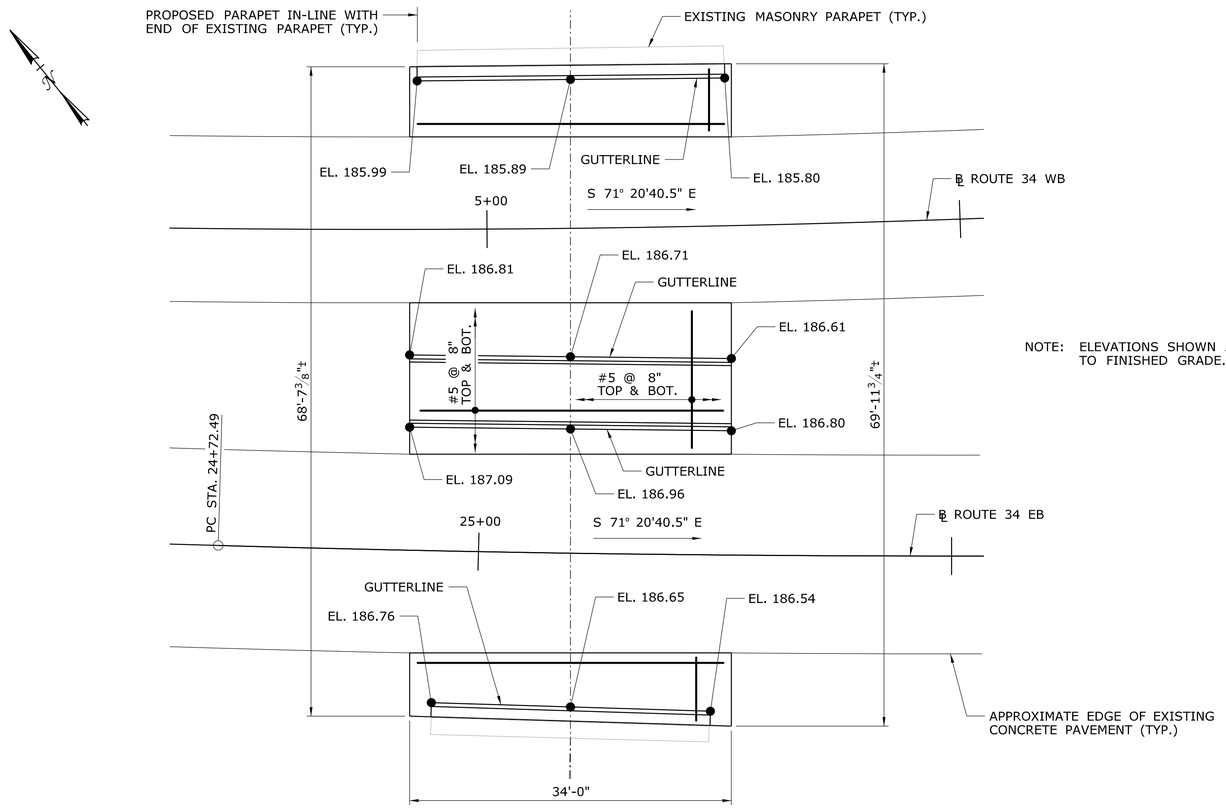

NOTE: ELEVATIONS SHOWN ARE TO FINISHED GRADE.

DECK PLAN

SCALE: 1/8" = 1'-0"

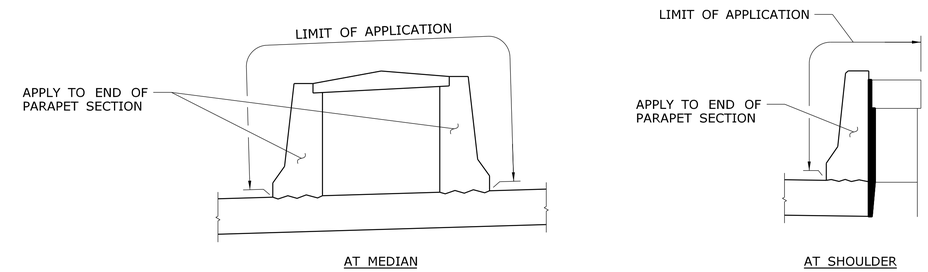

LIMITS OF PENETRATING SEALER

NOT TO SCALE

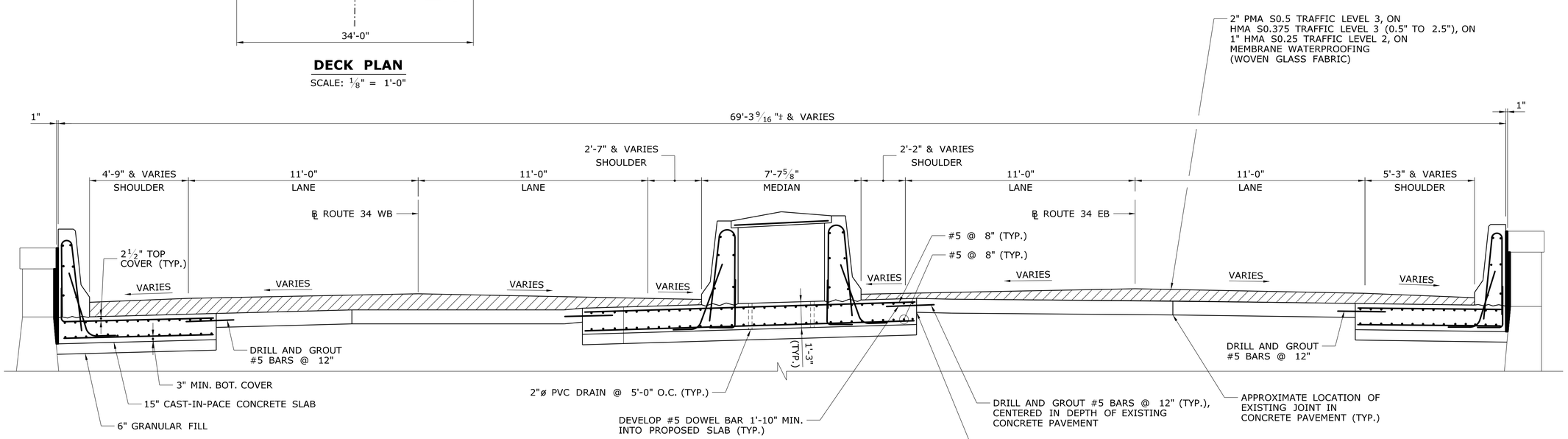

TYPICAL DECK SECTION

SCALE: 3/8" = 1'-0"

REV.	DATE	REVISION DESCRIPTION	SHEET NO.

THE INFORMATION, INCLUDING ESTIMATED QUANTITIES OF WORK, SHOWN ON THESE SHEETS IS BASED ON LIMITED INVESTIGATIONS BY THE STATE AND IS IN NO WAY WARRANTED TO INDICATE THE CONDITIONS OF ACTUAL QUANTITIES OF WORK WHICH WILL BE REQUIRED.

Plotted Date: 11/28/2018

DESIGNER/DRAFTER: JJF

CHECKED BY: AML

SCALE AS NOTED

STATE OF CONNECTICUT
DEPARTMENT OF TRANSPORTATION

Filename: ...\S-10 DECK PLAN.dgn

SIGNATURE/BLOCK:

Stantec Consulting Services Inc.
55 Church Street
Suite 601
New Haven, CT 06510

PROJECT TITLE:

REHABILITATION OF BRIDGE NO. 00948, ROUTE 34 OVER WEPAWAUG RIVER

TOWN: **ORANGE**

DRAWING TITLE: **DECK PLAN**

PROJECT NO. **106-127**

DRAWING NO. **S-10**

SHEET NO. **04.10**

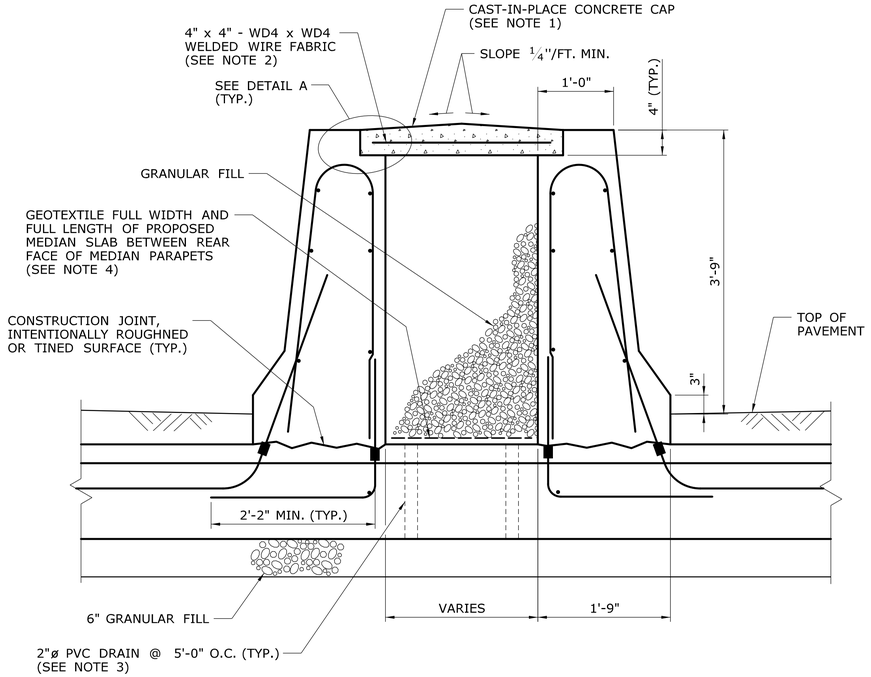

TYPICAL MEDIAN BARRIER SECTION

SCALE: 1" = 1'-0"

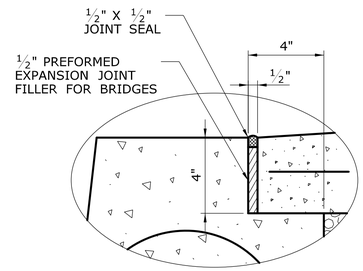

DETAIL A

SCALE: 3" = 1'-0"

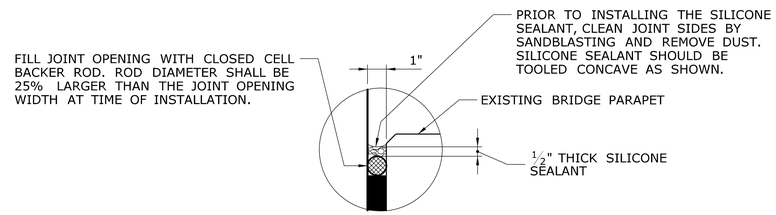

DETAIL B

SCALE: 3" = 1'-0"

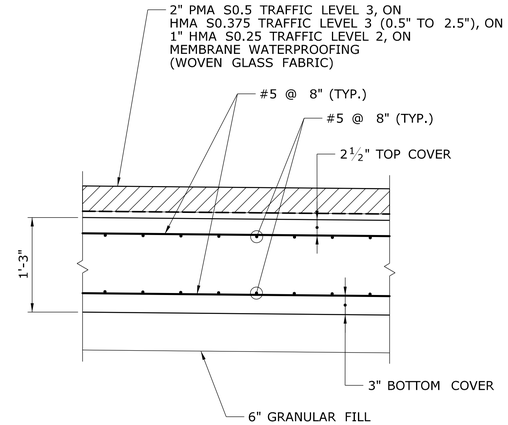

TYPICAL PROPOSED SLAB SECTION

SCALE: 1" = 1'-0"

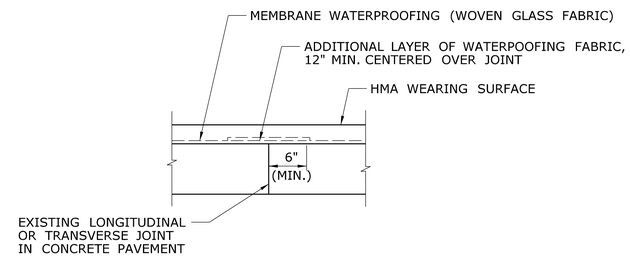

MEMBRANE WATERPROOFING AT EXISTING CONCRETE PAVEMENT JOINTS

SCALE: 1" = 1'-0"

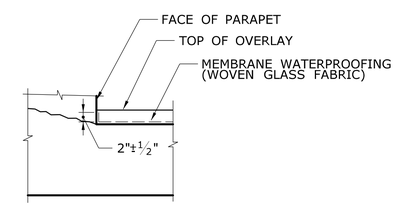

MEMBRANE WATERPROOFING AT GUTTERLINE

SCALE: 3/4" = 1'-0"

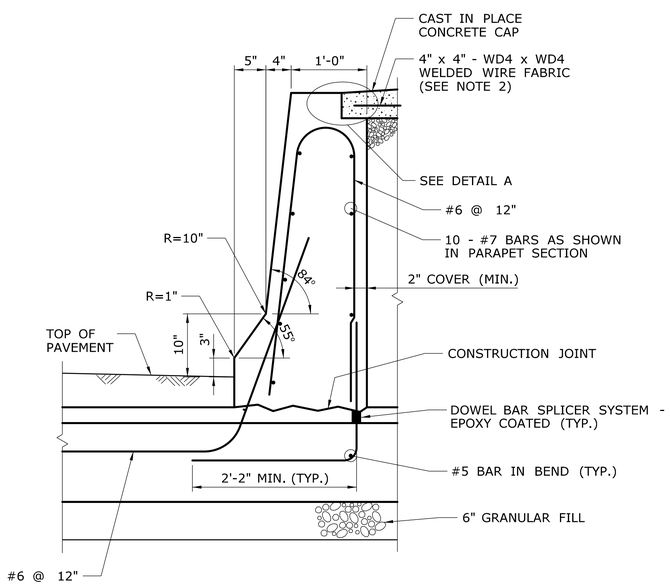

TYPICAL MEDIAN BARRIER CURB

SCALE: 1" = 1'-0"

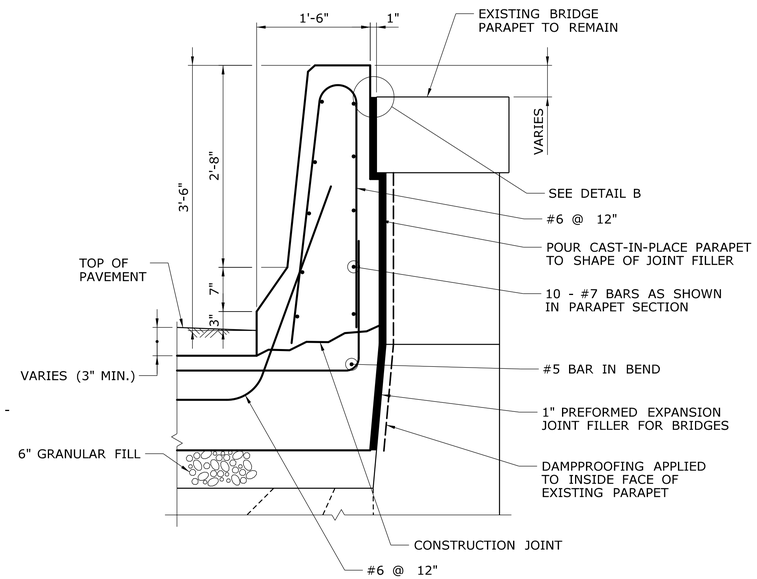

TYPICAL PARAPET SECTION

SCALE: 1" = 1'-0"

NOTES:

1. THE COST OF CAST-IN-PLACE CONCRETE CAP TO BE PAID FOR UNDER THE ITEM "CLASS 'F' CONCRETE".
2. WELDED WIRE FABRIC TO BE PAID FOR UNDER THE ITEM "WELDED WIRE FABRIC - EPOXY COATED".
3. THE COST 2" PVC DRAINS TO BE PAID FOR UNDER THE ITEM "2" POLYVINYL CHLORIDE PIPE."
4. GEOTEXTILE SHALL BE PAID FOR UNDER THE ITEM "GEOTEXTILE (SUBSURFACE DRAINAGE - CLASS A)".

REV.	DATE	REVISION DESCRIPTION	SHEET NO.
-	-	-	-
-	-	-	-
-	-	-	-
-	-	-	-
-	-	-	-
-	-	-	-

THE INFORMATION, INCLUDING ESTIMATED QUANTITIES OF WORK, SHOWN ON THESE SHEETS IS BASED ON LIMITED INVESTIGATIONS BY THE STATE AND IS IN NO WAY WARRANTED TO INDICATE THE CONDITIONS OF ACTUAL QUANTITIES OF WORK WHICH WILL BE REQUIRED.

Plotted Date: 11/28/2018

DESIGNER/DRAFTER: JRA
CHECKED BY: AML
SCALE AS NOTED

STATE OF CONNECTICUT
DEPARTMENT OF TRANSPORTATION

Filename: ...\S-11 PARAPET & MEDIAN DETAILS.dgn

SIGNATURE/BLOCK:

Stantec Consulting Services Inc.
55 Church Street
Suite 601
New Haven, CT 06510

PROJECT TITLE:
REHABILITATION OF BRIDGE NO. 00948, ROUTE 34 OVER WEPAWAUG RIVER

TOWN: **ORANGE**

DRAWING TITLE: **PARAPET & MEDIAN DETAILS**

PROJECT NO. 106-127
DRAWING NO. S-11
SHEET NO. 04.11

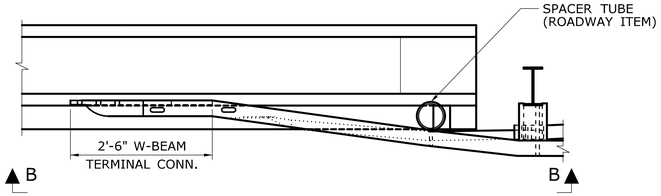

ATTACHMENT PLAN

SCALE: 3/4" = 1'-0"

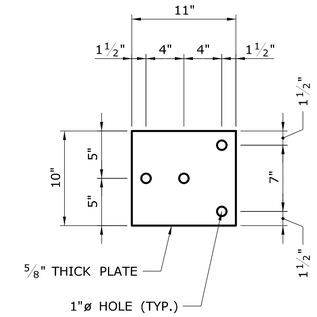

ANCHOR PLATE DETAIL

SCALE: 1 1/2" = 1'-0"

METAL BEAM RAIL NOTES

1. STEEL PLATES SHALL CONFORM TO THE REQUIREMENTS OF ASTM A36 AND BE HOT-DIP GALVANIZED IN ACCORDANCE WITH ASTM A123.
2. ANCHOR BOLTS SHALL CONFORM TO THE REQUIREMENTS OF ASTM A325, MECHANICALLY GALVANIZED.
3. 1"ø PIPE SHALL CONFORM TO THE REQUIREMENTS OF ASTM A53 GRADE B OR ASTM A501 AND SHALL BE GALVANIZED IN ACCORDANCE WITH ASTM A123.
4. ROADWAY ELEMENTS SHALL BE PAID FOR UNDER THE APPLICABLE ROADWAY ITEMS.
5. ALL RAIL ANCHORAGE MATERIAL REQUIRED FOR END ATTACHMENTS SHALL BE PAID FOR UNDER THE APPLICABLE ROADWAY ITEMS.

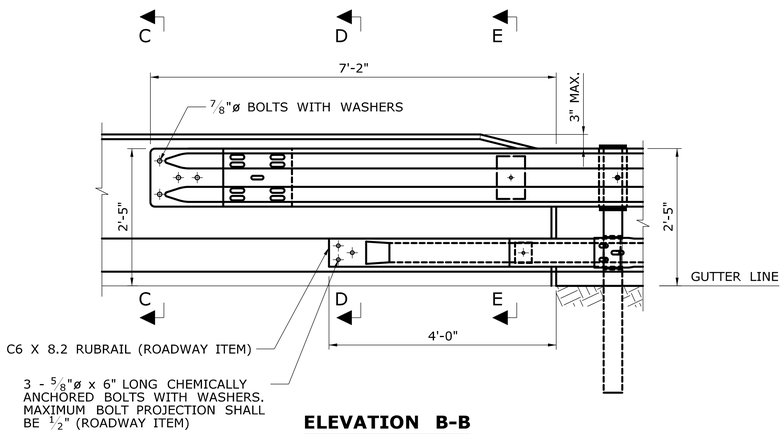

ELEVATION B-B

SCALE: 3/4" = 1'-0"

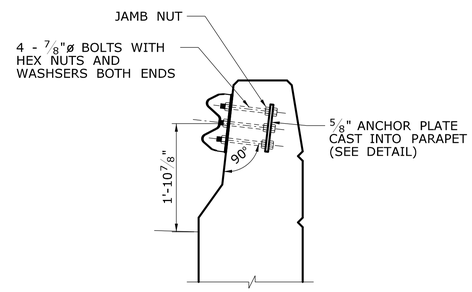

SECTION C-C

SCALE: 3/4" = 1'-0"

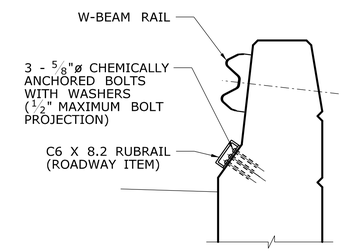

SECTION D-D

SCALE: 3/4" = 1'-0"

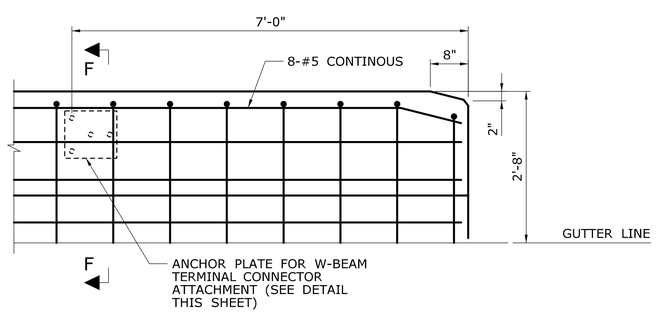

PARAPET REINFORCING AT ENDS

SCALE: 3/4" = 1'-0"

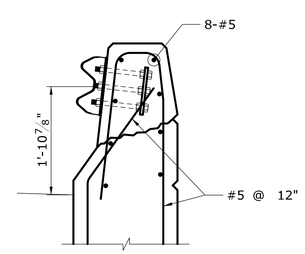

SECTION F-F

SCALE: 3/4" = 1'-0"

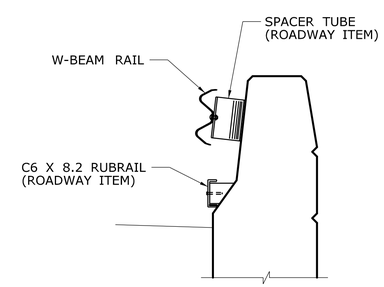

SECTION E-E

SCALE: 3/4" = 1'-0"

REV.	DATE	REVISION DESCRIPTION	SHEET NO.

THE INFORMATION, INCLUDING ESTIMATED QUANTITIES OF WORK, SHOWN ON THESE SHEETS IS BASED ON LIMITED INVESTIGATIONS BY THE STATE AND IS IN NO WAY WARRANTED TO INDICATE THE CONDITIONS OF ACTUAL QUANTITIES OF WORK WHICH WILL BE REQUIRED.

Plotted Date: 11/28/2018

DESIGNER/DRAFTER: JRA
CHECKED BY: AML
SCALE AS NOTED

STATE OF CONNECTICUT
DEPARTMENT OF TRANSPORTATION

Filename: ...\S-12 RAILING ATTACHMENT DETAILS.dgn

SIGNATURE/BLOCK:
Stantec Consulting Services Inc.
55 Church Street
Suite 601
New Haven, CT 06510

PROJECT TITLE:
REHABILITATION OF BRIDGE NO. 00948, ROUTE 34 OVER WEPAWAUG RIVER

TOWN: ORANGE

DRAWING TITLE: RAILING ATTACHMENT DETAILS

PROJECT NO. 106-127
DRAWING NO. S-12
SHEET NO. 04.12