SUBSET 04 - STRUCTURE
INDEX OF DRAWINGS

DRAWING NUMBER	DRAWING TITLE	DRAWING NUMBER	DRAWING TITLE
S-01	INDEX OF STRUCTURE DRAWINGS		
S-02	GENERAL PLAN		
S-03	BORING LOGS		
S-04	RETAINING WALL DETAILS		
S-05	TIE-BACK DETAILS		

DESIGNED BY:
ANCHOR
ENGINEERING SERVICES, INC.

STATE OF CONNECTICUT
MARK M. ZESSIN
No. 18215
LICENSED
PROFESSIONAL ENGINEER

Mark M. Zessin
2018.11.16
13:39:00-05'00'

REV.	DATE	REVISION DESCRIPTION	SHEET NO.

THE INFORMATION, INCLUDING ESTIMATED QUANTITIES OF WORK, SHOWN ON THESE SHEETS IS BASED ON LIMITED INVESTIGATIONS BY THE STATE AND IS IN NO WAY WARRANTED TO INDICATE THE CONDITIONS OF ACTUAL QUANTITIES OF WORK WHICH WILL BE REQUIRED.

Plotted Date: 11/16/2018

DESIGNER/DRAFTER: K. FLETCHER
CHECKED BY: M. ZESSIN

STATE OF CONNECTICUT
DEPARTMENT OF TRANSPORTATION

Filename: ...\04.01_SB_MSH_167_0107_Br02151_DWL-04.dgn

SIGNATURE/ BLOCK:

ANCHOR
41 Sugar Grove
Chesshire, CT 06411
P: 203.271.4770
F: 866.615.5971

PROJECT TITLE:
REHABILITATION OF
BRIDGE NO. 02151
ROUTE 15 OVER RACE BROOK

TOWN: WOODBRIDGE

DRAWING TITLE: INDEX OF STRUCTURE DRAWINGS

PROJECT NO. 0167-0107
DRAWING NO. S-01
SHEET NO. 04.01

Border Versions 07/19/16

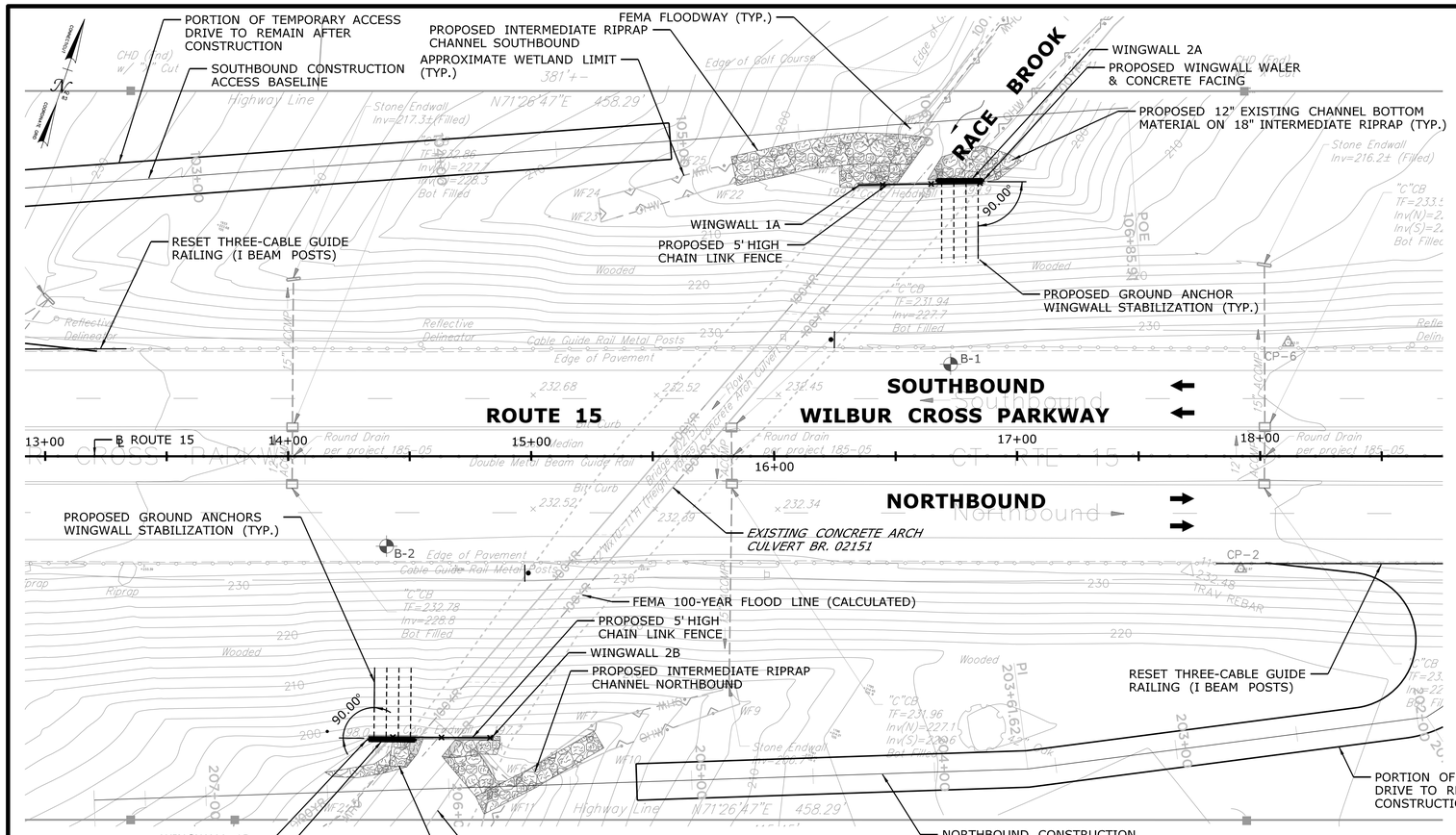

PLAN
SCALE 1"=30'-0"

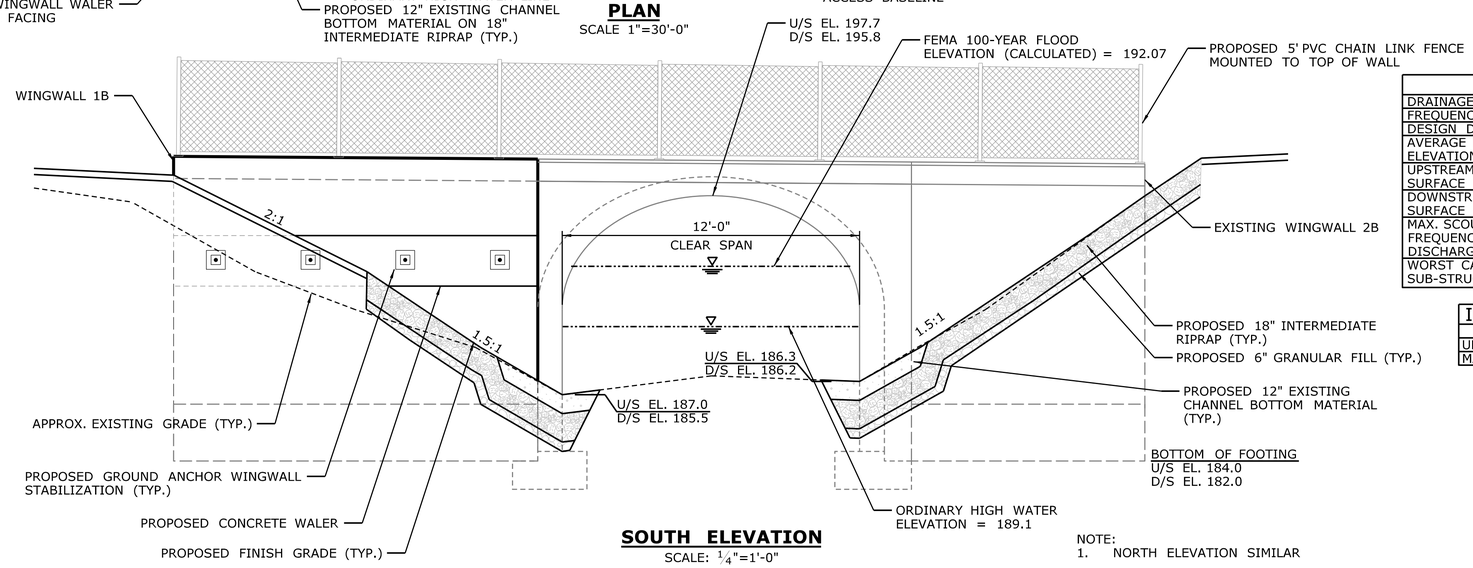

SOUTH ELEVATION
SCALE: 1/4"=1'-0"

NOTE:
1. NORTH ELEVATION SIMILAR

GENERAL NOTES

SPECIFICATIONS:	CONNECTICUT DEPARTMENT OF TRANSPORTATION FORM 817 (2016), WITH JANUARY 2018 SUPPLEMENTAL SPECIFICATIONS AND SPECIAL PROVISIONS.
DESIGN SPECIFICATIONS:	AASHTO LRFD BRIDGE SPECIFICATIONS, 7th EDITION, AS SUPPLEMENTED BY THE 2003 CONNECTICUT DEPARTMENT OF TRANSPORTATION BRIDGE DESIGN MANUAL.
DESIGN STRESSES:	CLASS "F" CONCRETE f'c = 4000 PSI NON-SHRINK GROUT f'c = 4000 PSI REINFORCEMENT (ASTM A615 GRADE 60) fy = 60,000 PSI
CONCRETE STRENGTH:	THE SPECIFIED CONCRETE STRENGTH USED IN DESIGN, F'c, OF THE CONCRETE COMPONENTS IS NOTED ABOVE. THE MINIMUM COMPRESSIVE STRENGTH OF THE CONCRETE IN THE CONSTRUCTED COMPONENTS SHALL CONFORM TO THE REQUIREMENTS OF OF THE SPECIAL PROVISION "SECTION 6.01 CONCRETE FOR STRUCTURES".
LIVE LOAD:	HL-93
FUTURE PAVING ALLOWANCE:	NONE.
CLASS "F" CONCRETE:	CLASS "F" CONCRETE SHALL BE USED FOR WINGWALL CONSTRUCTION.
CLASS "S" CONCRETE:	CLASS "S" CONCRETE SHALL BE USED FOR WINGWALL REPAIR.
EXPOSED EDGES:	EXPOSED EDGES OF CONCRETE SHALL BE BEVELED 1"x1" UNLESS DIMENSIONED OTHERWISE.
REINFORCEMENT:	ALL REINFORCEMENT SHALL BE ASTM A615 GRADE 60.
CONCRETE COVER:	ALL REINFORCEMENT SHALL HAVE 2" COVER UNLESS DIMENSIONED OTHERWISE.
CONSTRUCTION JOINTS:	CONSTRUCTION JOINTS, OTHER THAN THOSE SHOWN ON THE PLANS, WILL NOT BE PERMITTED WITHOUT THE PRIOR APPROVAL OF THE ENGINEER.
DIMENSIONS:	WHEN DECIMAL DIMENSIONS ARE GIVEN TO LESS THAN THREE DECIMAL PLACES, THE OMITTED DIGITS SHALL BE ASSUMED TO BE ZEROS.
EXISTING DIMENSIONS:	DIMENSIONS OF THE EXISTING STRUCTURE SHOWN ON THESE PLANS ARE FOR GENERAL REFERENCE ONLY. THEY HAVE BEEN TAKEN FROM THE ORIGINAL DRAWINGS AND ARE NOT GUARANTEED. THE CONTRACTOR SHALL TAKE ALL FIELD MEASUREMENTS NECESSARY TO ASSURE PROPER FIT OF THE FINISHED WORK AND SHALL ASSUME FULL RESPONSIBILITY FOR THEIR ACCURACY WHEN SHOP DRAWINGS BASED ON FIELD MEASUREMENT ARE SUBMITTED FOR APPROVAL, THE FIELD MEASUREMENT SHALL ALSO BE SUBMITTED FOR REFERENCE BY THE REVIEWER.
SOIL PARAMETERS:	φ = 30° , INTERNAL SOIL FRICTION γ = 125 PCF, UNIT WEIGHT OF SOIL C_{rock} = 20 KSF, MAX FOR TENDON BOND STRESS IN ROCK
PRESTRESSING (TIEBACKS):	BARS - ASTM DESIGNATION = A722 TYPE II

HYDRAULIC DATA

DRAINAGE AREA	1.74 SQ. MI.
FREQUENCY	100 - YEAR
DESIGN DISCHARGE	420 CFS
AVERAGE DAILY FLOW ELEVATION	189.11
UPSTREAM DESIGN WATER SURFACE ELEVATION	193.74
DOWNSTREAM DESIGN WATER SURFACE ELEVATION	191.56
MAX. SCOUR ELEVATION	180.4
FREQUENCY	500 - YEAR
DISCHARGE	540 CFS
WORST CASE SCOUR SUB-STRUCTURE UNIT	WEST

INSPECTION OF FIELD WELDS

METHODS	UNIT	QUANTITY
ULTRASONIC	IN.	0
MAGNETIC PARTICLE	L.F.	0

CONCRETE DISTRIBUTION

SUPERSTRUCTURE	C.Y.	0
SUBSTRUCTURE	C.Y.	36
FOOTINGS	C.Y.	0
TOTAL	C.Y.	36

BRIDGE QUANTITIES

CONSTRUCTION ITEM	PAY UNIT	QUANTITY
EXCAVATION AND REUSE OF EXISTING CHANNEL BOTTOM MATERIAL	C.Y.	7
STRUCTURE EXCAVATION - EARTH (COMPLETE)	C.Y.	40
HANDLING WATER	L.S.	L.S.
GROUND ANCHOR	EA.	8
PERFORMANCE TEST FOR GROUND ANCHOR	EA.	4
PROOF TEST FOR GROUND ANCHOR	EA.	4
CLASS "S" CONCRETE	C.F.	6
CLASS "F" CONCRETE	C.Y.	30
DEFORMED STEEL BARS	LB.	5,500
DRILLING HOLES AND GROUTING DOWELS	EA.	240
TEMPORARY EARTH RETAINING SYSTEM	S.F.	1,210
5' POLYVINYL CHLORIDE CHAIN LINK FENCE	L.F.	110

NOTICE TO BRIDGE INSPECTORS

THE DEPARTMENTS BRIDGE SAFETY PROCEDURES REQUIRE THIS BRIDGE TO BE INSPECTED FOR, BUT NOT LIMITED TO, ALL APPROPRIATE COMPONENTS INDICATED IN THE GOVERNING MANUALS FOR BRIDGE INSPECTION. ATTENTION MUST BE GIVEN TO INSPECTING THE FOLLOWING SPECIAL COMPONENTS AND DETAILS. (THE LISTING FOR COMPONENTS FOR SPECIFIC ATTENTION SHALL NOT BE CONSTRUED TO REDUCE THE IMPORTANCE OF INSPECTION OF ANY OTHER COMPONENT OF STRUCTURE.) THE FREQUENCY OF INSPECTION OF THIS STRUCTURE SHALL BE IN ACCORDANCE WITH THE GOVERNING MANUALS FOR BRIDGE INSPECTION, UNLESS OTHERWISE DIRECTED BY THE MANAGER OF BRIDGE SAFETY AND EVALUATION.

COMPONENT OR DETAIL	BRIDGE SHEET REFERENCE
NONE	

REV.	DATE	REVISION DESCRIPTION	SHEET NO.

THE INFORMATION, INCLUDING ESTIMATED QUANTITIES OF WORK, SHOWN ON THESE SHEETS IS BASED ON LIMITED INVESTIGATIONS BY THE STATE AND IS IN NO WAY WARRANTED TO INDICATE THE CONDITIONS OF ACTUAL QUANTITIES OF WORK WHICH WILL BE REQUIRED.

Plotted Date: 11/16/2018

DESIGNER/DRAFTER: K. FLETCHER
CHECKED BY: M. ZESSIN
SCALE AS NOTED

STATE OF CONNECTICUT
DEPARTMENT OF TRANSPORTATION

Filename: ...\04.02_SB_MSH_167_0107_Br02151_GPN-01.dgn

SIGNATURE/BLOCK:

ANCHOR
41 Inspection Chandler, CT 06013
P: 860.613.4750
F: 860.613.5971

PROJECT TITLE:
REHABILITATION OF BRIDGE NO. 02151 ROUTE 15 OVER RACE BROOK

TOWN: **WOODBRIDGE**

DRAWING TITLE: **GENERAL PLAN**

PROJECT NO. **0167-0107**
DRAWING NO. **S-02**
SHEET NO. **04.02**

Border Version: 07/19/16

Connecticut DOT Boring Report

Driller: A. Conant		Hole No.: B-1	
Inspector: G. Arzt	Town: Woodbridge	Stat./Offset: 16+73/38' Lft	
Engineer: Robert Pion	Project No.: 167-107	Northing: 675940	
Start Date: 4-22-14	Route No.: 15S	Easting: 927710	
Finish Date: 4-23-14	Bridge No.: 02151	Surface Elevation: 233.33	
Project Description: Bridge No. 02151			
Casing Size/Type: 4" HW	Sampler Type/Size: SS 1 3/8" ID	Core Barrel Type: NQ	
Hammer Wt.: Fall: in.	Hammer Wt.: 140 Fall: 30in.		
Groundwater Observations: @35.3 after 0 hours			

Depth (ft)	Sample Type/No.	Blows on Sampler per 6 inches	Pen. (in.)	Rec. (in.)	RQD %	Generalized Strata Description	Material Description and Notes	Elevation (ft)
0						PAVEMENT STRUCTURE/ MISC FILL		230
5	S-1	5 5 5 6	24	6			Gray f-c SAND, some c-f gravel, trace silt	
10	S-2	4 4 2 1	24	5			Gray c-f GRAVEL, little c-f sand, trace silt	225
15	S-3	6 9 8 3	24	8			Gray c-f GRAVEL, little f-c sand, little silt	220
20	S-4	5 5 6 8	24	6			Gray c-f GRAVEL, some f-c sand, trace silt	215
25	S-5	8 9 16 17	24	11			Gray c-f GRAVEL, some f-c sand, trace silt	210
30	S-6	28 55 51 37	24	16			Gray c-f GRAVEL, little f-c sand, trace silt	205
35	S-7	70 0 0 0	2	0		WEATHERED BEDROCK	Gray Rock Chips	200
40	C-1		60	18	0	BEDROCK	Gray medium bedded, highly fractured, slightly weathered schist Core times in min/ft: 6.5, 5.5, 3.5, 4.5, 8.0	195
45	C-2		60	53	48		Gray medium bedded, highly fractured, slightly weathered schist Core times in min/ft: 7.0, 6.0, 6.0, 8.0, 6.0	190
50							END OF BORING 46.5ft	185

Sample Type: S = Split Spoon C = Core UP = Undisturbed Piston V = Vane Shear Test

Proportions Used: Trace = 1 - 10%, Little = 10 - 20%, Some = 20 - 35%, And = 35 - 50%

Total Penetration in Earth: 36.5ft Rock: 10ft No. of Soil Samples: 7 No. of Core Runs: 2	NOTES: Pavement section consists of 10.5 inches of bituminous concrete pavement with no discernable subbase The sand and gravel particles in samples S-1 through S-4 are highly to completely weathered	Sheet 1 of 1 SM-001-M REV. 1/02

Connecticut DOT Boring Report

Driller: A. Conant		Hole No.: B-2	
Inspector: G. Arzt	Town: Woodbridge	Stat./Offset: 14+40/37' Rt	
Engineer: Robert Pion	Project No.: 167-107	Northing: 675975	
Start Date: 4-23-14	Route No.: 15N	Easting: 927513	
Finish Date: 4-24-14	Bridge No.: 02151	Surface Elevation: 233.59	
Project Description: Bridge No. 02151			
Casing Size/Type: 4" HW	Sampler Type/Size: SS 1 3/8" ID	Core Barrel Type: NQ	
Hammer Wt.: Fall: in.	Hammer Wt.: 140 Fall: 30in.		
Groundwater Observations: @42 after 0 hours			

Depth (ft)	Sample Type/No.	Blows on Sampler per 6 inches	Pen. (in.)	Rec. (in.)	RQD %	Generalized Strata Description	Material Description and Notes	Elevation (ft)
0						PAVEMENT STRUCTURE/ MISC FILL		230
5	S-1	90 0 0 0	5	1			Brown c Gravel	
10	S-2	32 55 44 19	24	11			Gray c-f GRAVEL, and c-f SAND, trace silt	225
15	S-3	12 16 16 12	24	13			Gray f-c SAND, and c-f GRAVEL, little silt	220
20	S-4	9 14 17 17	24	12			Gray f-c SAND, some silt, trace f gravel	215
25	S-5	19 7 4 10	24	8			Gray f-c SAND, some silt, little c-f gravel	210
30	S-6	6 5 5 6	24	6		BOULDER	Gray completely weathered rock	205
35	S-7	6 16 5 6	24	10			Gray completely weathered rock	200
40	S-8	15 63 90 0	16	11		SANDY GRAVEL	Gray c-f SAND, and c-f GRAVEL, trace silt	195
45	C-1		60	31	0	BEDROCK	Gray medium bedded, highly fractured, slightly weathered schist Core times in min/ft: 4.0, 6.0, 6.5, 5.0, 5.0	190
50	C-2		60	41	17		Gray medium bedded, highly fractured, slightly weathered schist Core times in min/ft: 4.0, 5.5, 6.0, 6.0, 6.0	185
55							END OF BORING 53ft	180
60								175

Sample Type: S = Split Spoon C = Core UP = Undisturbed Piston V = Vane Shear Test

Proportions Used: Trace = 1 - 10%, Little = 10 - 20%, Some = 20 - 35%, And = 35 - 50%

Total Penetration in Earth: 43ft Rock: 10ft No. of Soil Samples: 8 No. of Core Runs: 2	NOTES: Pavement section consists of 6 inches of bituminous concrete pavement with no discernable subbase The sand and gravel particles in samples S-2 and S-3 are highly to completely weathered	Sheet 1 of 1 SM-001-M REV. 1/02

REV.	DATE	REVISION DESCRIPTION	SHEET NO.

THE INFORMATION, INCLUDING ESTIMATED QUANTITIES OF WORK, SHOWN ON THESE SHEETS IS BASED ON LIMITED INVESTIGATIONS BY THE STATE AND IS IN NO WAY WARRANTED TO INDICATE THE CONDITIONS OF ACTUAL QUANTITIES OF WORK WHICH WILL BE REQUIRED.

Plotted Date: 11/16/2018

DESIGNER/DRAFTER: K. FLETCHER

CHECKED BY: M. ZESSIN

STATE OF CONNECTICUT
DEPARTMENT OF TRANSPORTATION

Filename: ...\04.03_SB_MSH_167_0107_Br02151_BOR-01.dgn

SIGNATURE/ BLOCK:

ANCHOR

PROJECT TITLE:
REHABILITATION OF BRIDGE NO. 02151 ROUTE 15 OVER RACE BROOK

TOWN: WOODBRIDGE

DRAWING TITLE: BORING LOGS

PROJECT NO. 0167-0107

DRAWING NO. S-03

SHEET NO. 04.03

Border Version: 07/19/16

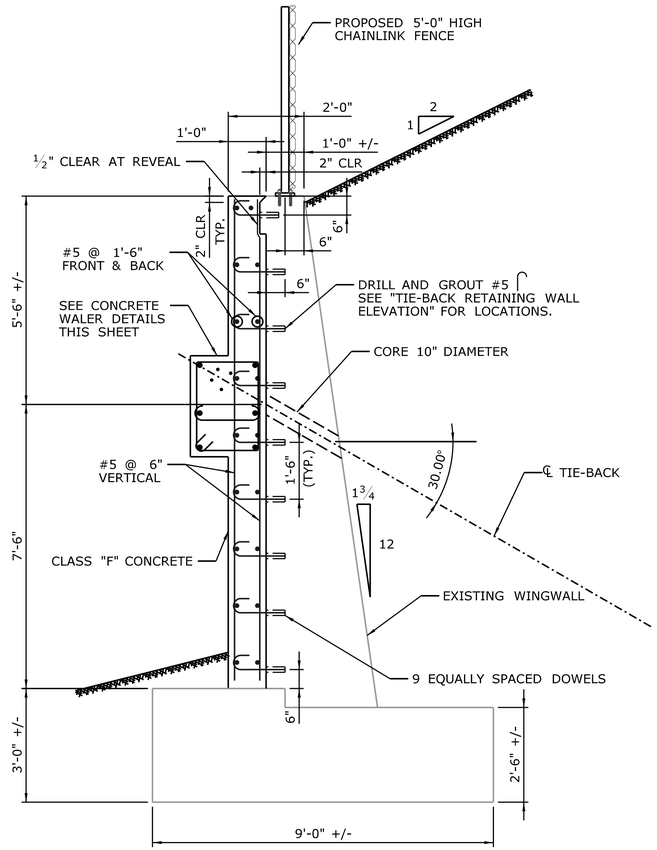

TIE-BACK RETAINING WALL SECTION

SCALE ½" = 1'-0"

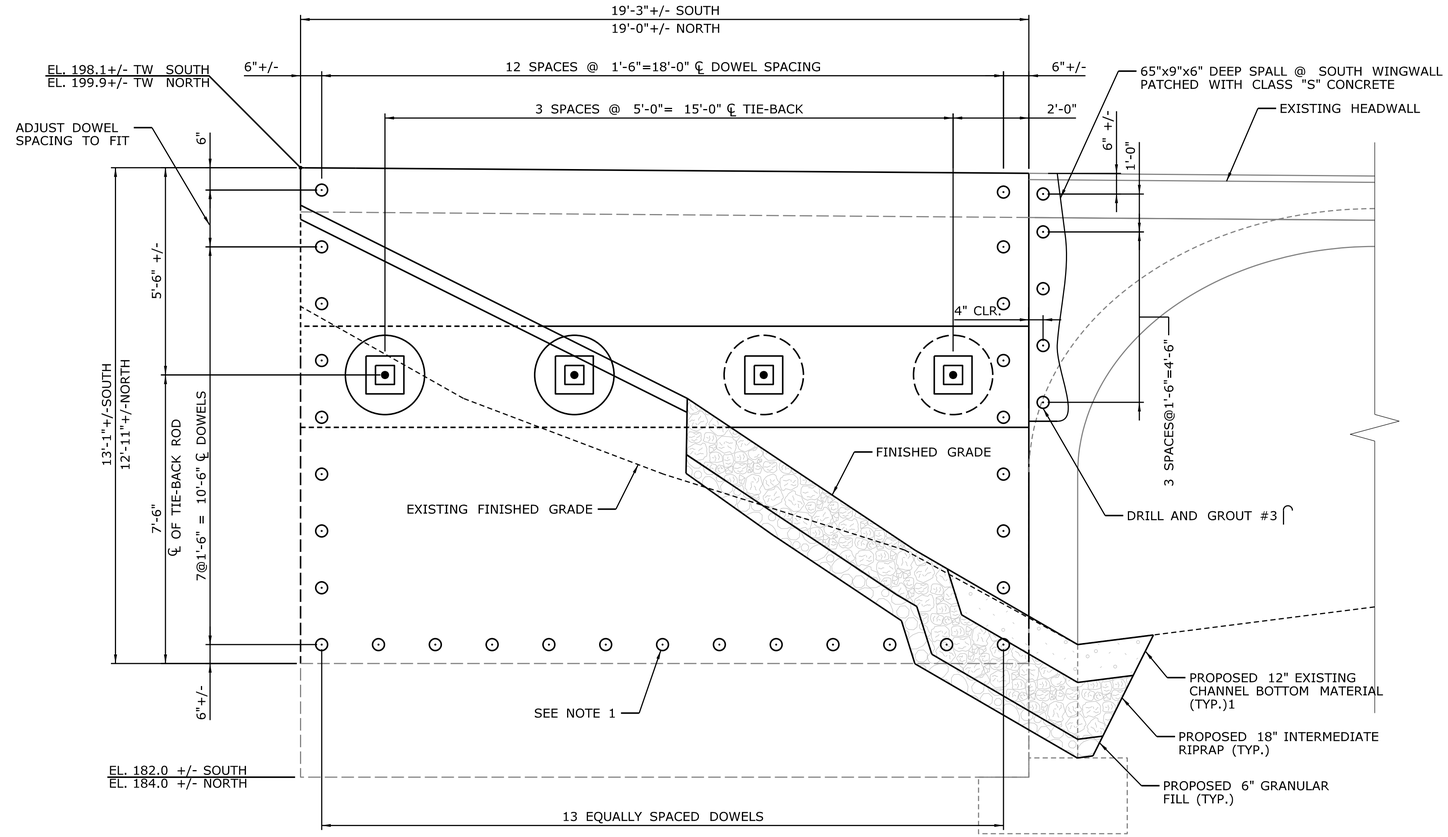

TIE-BACK RETAINING WALL ELEVATION

SCALE ½" = 1'-0"

NOTE:
1. ⊙ INDICATES DRILL & ANCHOR
   #5 ⌒ DOWEL LOCATION.
   NOT ALL SHOWN FOR CLARITY.
   OMIT WHERE CONFLICTS WITH TIE-BACK
2. REFER TO TIE-BACK DETAILS SHEET FOR TIE-BACK PLAN.

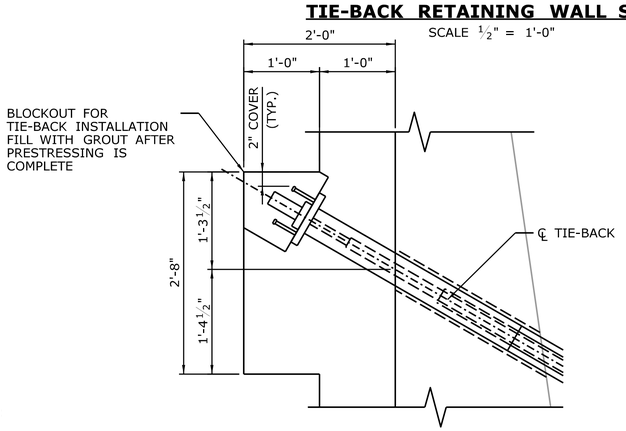

WALER DIMENSIONS

SCALE 1" = 1'-0"

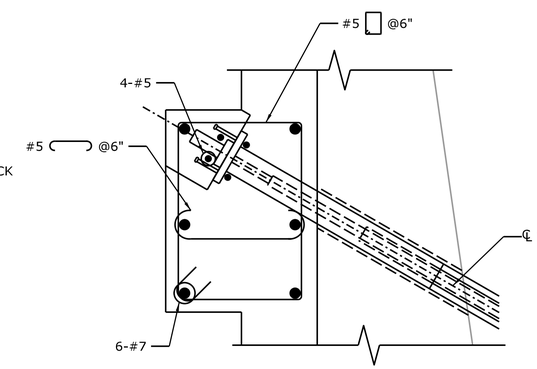

WALER REINFORCEMENT DETAILS

SCALE 1" = 1'-0"

NOTES:

1) SEE SHEET S-05 FOR TIEBACK DETAIL.

2) STEM REINFORCING AND DOWELS ARE OMITTED FOR CLARITY.

CONCRETE WALER DETAILS

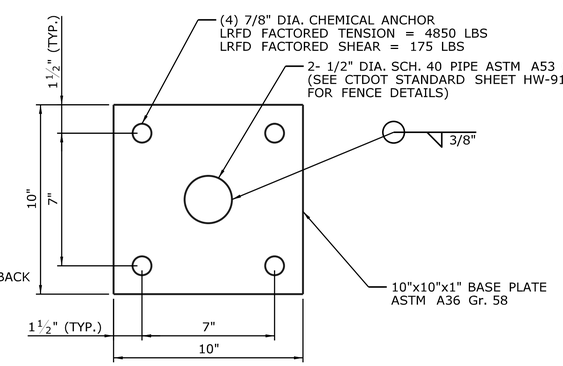

PROTECTIVE FENCE BASE PLATE

NOT TO SCALE

NOTE:
1. EPOXY ANCHORS SHALL BE INSTALLED PER MANUFACTURER'S INSTRUCTIONS.
2. THE COST OF FABRICATING AND INSTALLING FENCE POSTS, BASE PLATES, ANCHOR BOLTS, AND ALL OTHER COMPONENTS OF THE CHAIN LINK FENCE SHALL BE INCLUDED IN ITEM #0913013 "5' POLYVINYL CHLORIDE CHAIN LINK FENCE".

LEGEND

○ DENOTES PERFORMANCE TEST PILE

◌ DENOTES PROOF TEST PILE

NOTE:
THE ANCHOR TEST SCHEDULE SHOWN IS ONE POSSIBILITY. THE FIRST 2 ANCHORS INSTALLED ON EACH WALL SHALL BE PERFORMANCED TESTED AND THE REMAINING ANCHORS SHALL BE PROOF TESTED. EXTENDED CREEP TEST NOT NOT REQUIRED FOR THESE GROUND ANCHORS.

SPLICE LENGTH SCHEDULE	
BAR	LENGTH
#5	21 INCHES

REV.	DATE	REVISION DESCRIPTION	SHEET NO.

THE INFORMATION, INCLUDING ESTIMATED QUANTITIES OF WORK, SHOWN ON THESE SHEETS IS BASED ON LIMITED INVESTIGATIONS BY THE STATE AND IS IN NO WAY WARRANTED TO INDICATE THE CONDITIONS OF ACTUAL QUANTITIES OF WORK WHICH WILL BE REQUIRED.

Plotted Date: 11/16/2018

DESIGNER/DRAFTER: K. FLETCHER
CHECKED BY: M. ZESSIN
SCALE AS NOTED

STATE OF CONNECTICUT
DEPARTMENT OF TRANSPORTATION

Filename: ...\04.04_SB_MSH_167_0107_Br02151_WWALL.dgn

SIGNATURE/BLOCK:
STATE OF CONNECTICUT MARK H. ZESSIN No. 18815 LICENSED PROFESSIONAL ENGINEER
ANCHOR 11 Sugar Grove Chandler, CT 06015 P: 860.635.8750 F: 860.635.5971

PROJECT TITLE:
REHABILITATION OF BRIDGE NO. 02151
ROUTE 15 OVER RACE BROOK

TOWN: WOODBRIDGE

DRAWING TITLE: RETAINING WALL DETAILS

PROJECT NO. 0167-0107
DRAWING NO. S-04
SHEET NO. 04.04

Border Version: 07/19/16

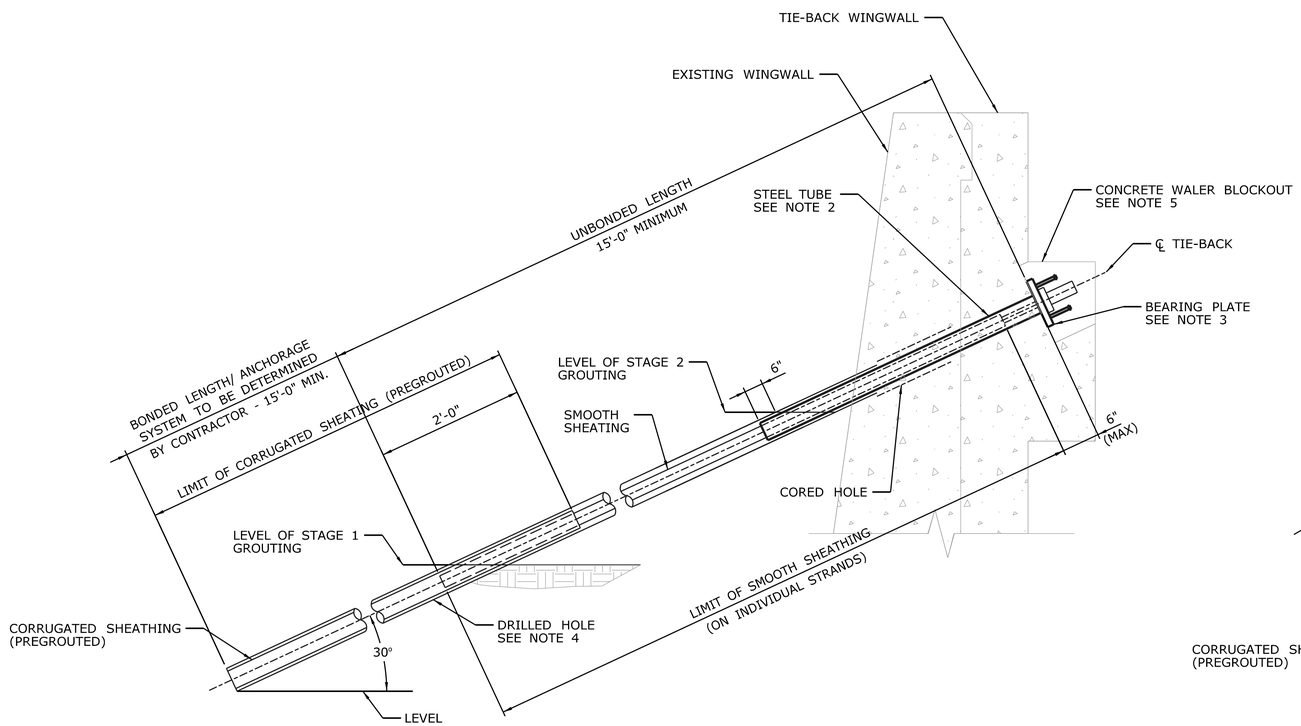

TIE-BACK DETAIL (STRAND)
OPTION 1
NOT TO SCALE

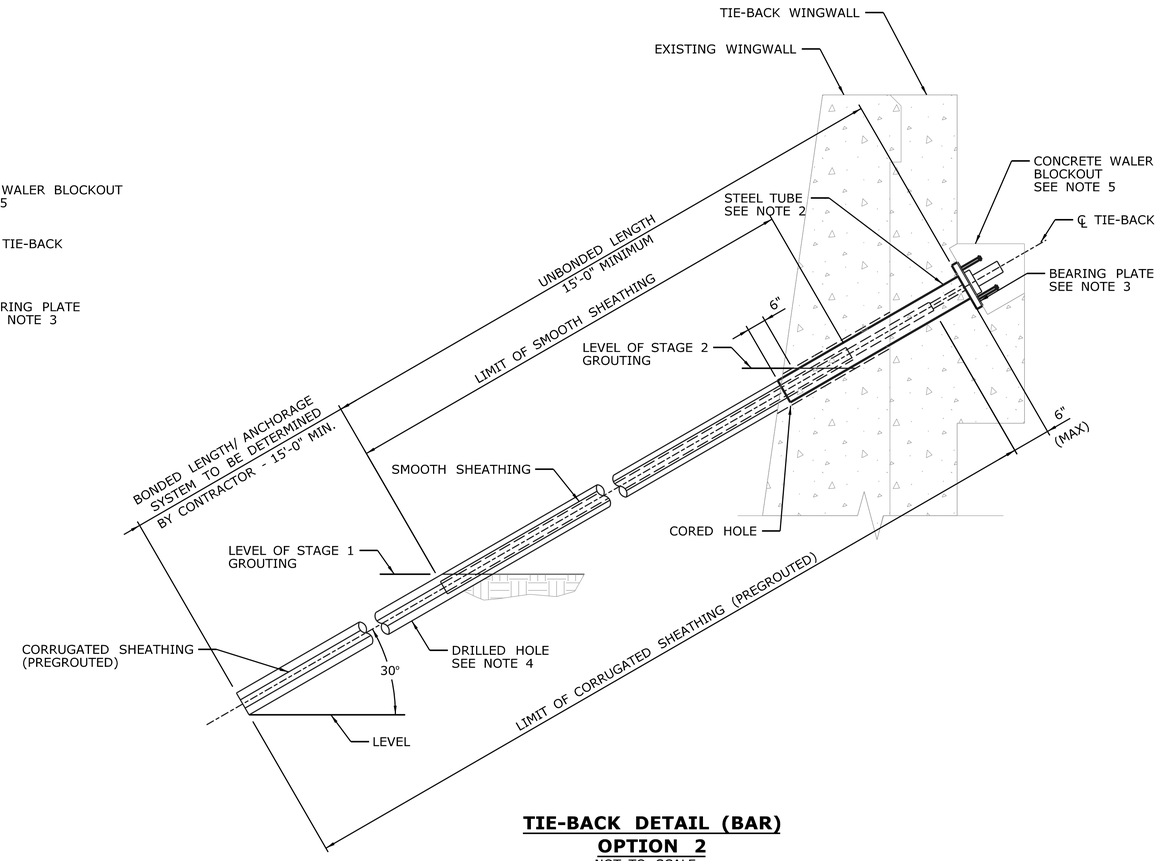

TIE-BACK DETAIL (BAR)
OPTION 2
NOT TO SCALE

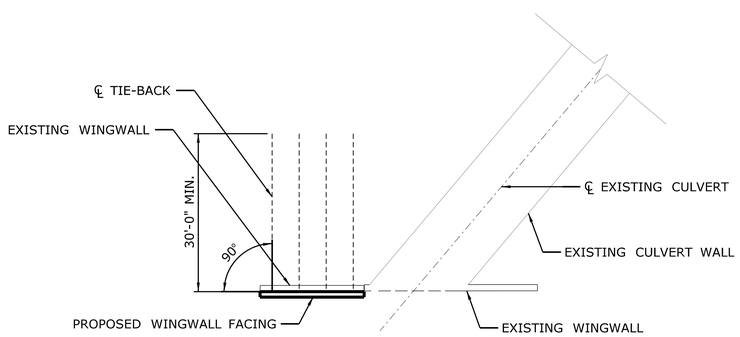

TIE-BACK PLAN
NOT TO SCALE

TIE-BACK ANCHOR NOTES:

1. CONTRACTOR SHALL SUBMIT WORKING DRAWINGS FOR THE ENGINEERS APPROVAL. SEE SPECIAL PROVISION ITEM #0506070A - GROUND ANCHORS.
2. STEEL TUBE WELDED TO BEARING PLATE (MIN. LENGTH = 3'-0", MIN. THICKNESS = 0.25") GALVANIZE ASSEMBLY AFTER FABRICATION
3. BEARING PLATE SIZE BY CONTRACTOR
4. DRILLED HOLE DIAMETER BY CONTRACTOR
5. FILL CONCRETE WALER BLOCKOUT WITH GROUT, PROVIDE 2" MIN. CONCRETE COVER OVER TIE-BACK ANCHORAGE AND TENDON.
6. CENTRALIZERS SHALL BE PLACED AT A MAXIMUM OF 10 FT AND NO MORE THAN 3 FT FROM END OF TENDONS.
7. MAX. DESIGN LOAD PER TIE BACK= 180 KIPS (STRENGTH I)
   147 KIPS (SERVICE)

GROUT PLACEMENT NOTES:

STAGE 1 GROUT BONDED LENGTH

STAGE 2 GROUT 6 INCHES INTO THE STEEL TUBE AFTER STRESSING AND LOCKING OF TENDON AGAINST STRUCTURE.

STAGE 3 GROUT TO FILL REMAINING VOID IN STEEL TUBE. TWO FOOT HEAD OF GROUT SHALL BE MAINTAINED UNTIL GROUT HAS SET.

GROUT FOR ALL STAGES SHALL BE INJECTED AT LOW END OF VOID BEING GROUTED.

STAGE 2 GROUTING MUST BE SET FOR A MINIMUM OF 24 HOURS PRIOR TO STAGE 3 GROUTING BEGINNING.

REV.	DATE	REVISION DESCRIPTION	SHEET NO.

THE INFORMATION, INCLUDING ESTIMATED QUANTITIES OF WORK, SHOWN ON THESE SHEETS IS BASED ON LIMITED INVESTIGATIONS BY THE STATE AND IS IN NO WAY WARRANTED TO INDICATE THE CONDITIONS OF ACTUAL QUANTITIES OF WORK WHICH WILL BE REQUIRED.

Plotted Date: 11/16/2018

DESIGNER/DRAFTER: K. FLETCHER
CHECKED BY: M. ZESSIN

STATE OF CONNECTICUT
DEPARTMENT OF TRANSPORTATION

Filename: ...\04.05_SB_MSH_167_0107_Br02151_TBD.dgn

SIGNATURE/ BLOCK:

ANCHOR
41 Sugar Drive
Glastonbury, CT 06033
T: (860) 633-7878
F: (860) 633-7892

PROJECT TITLE:
REHABILITATION OF BRIDGE NO. 02151 ROUTE 15 OVER RACE BROOK

TOWN: **WOODBRIDGE**

DRAWING TITLE: **TIE-BACK DETAILS**

PROJECT NO. **0167-0107**
DRAWING NO. **S-05**
SHEET NO. **04.05**

Border Version: 07/19/16