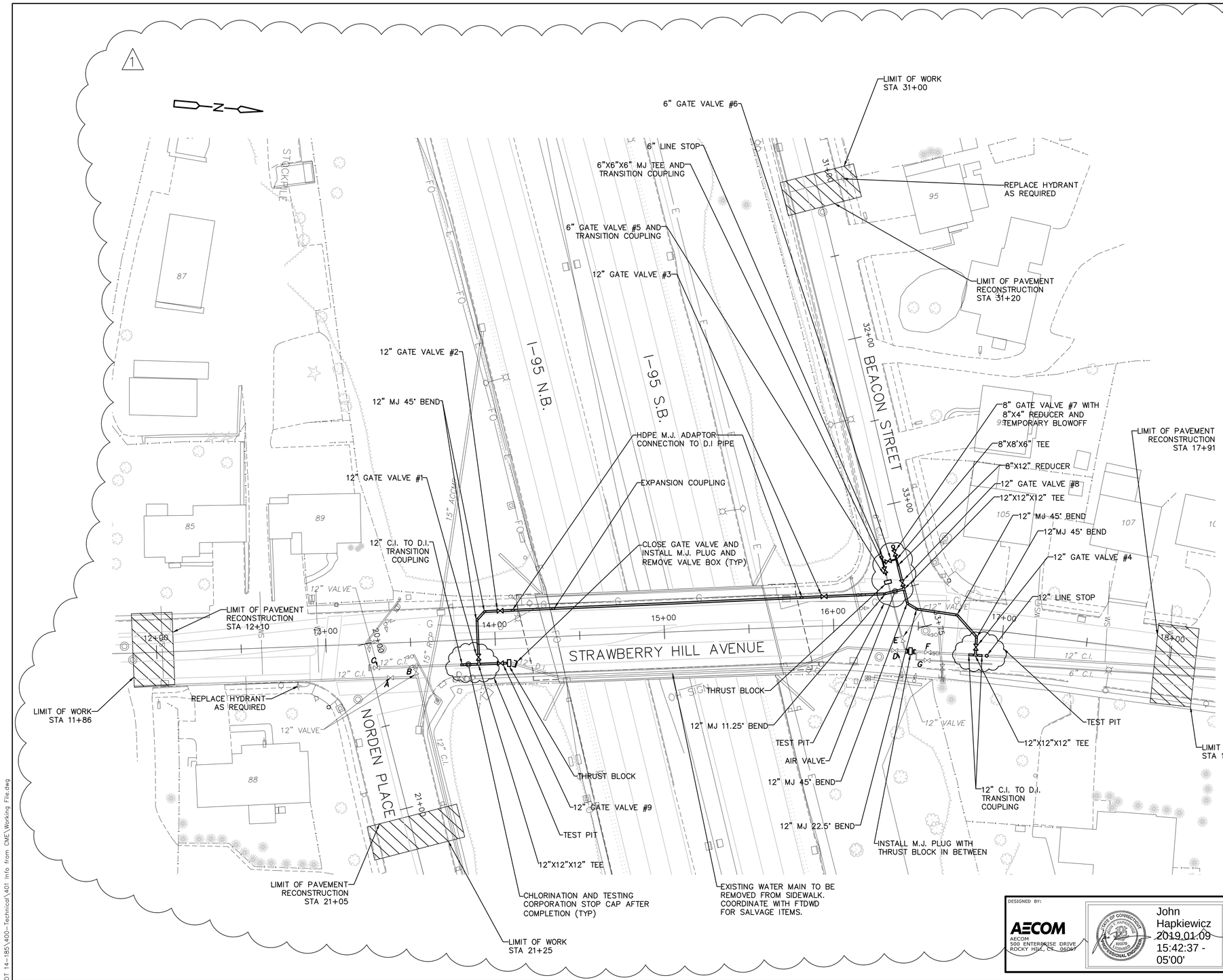

SUGGESTED CONSTRUCTION SEQUENCE

STEP 1

A. CLOSE VALVES A, B, AND D, AND CONFIRM VALVE C IS CLOSED.

B. CUT OUT A SECTION OF THE EXISTING 12" CI WATER MAIN AND INSTALL A 12"X12"X12" MJ TEE, TWO 12" GATE VALVES (1, 9), AND TWO 12" CI TO DI TRANSITION COUPLINGS NEAR STA 14+00.

C. INSTALL A TEMPORARY12" MJ PLUG IN VALVE 1 AND CLOSE VALVE 1.

D. OPEN VALVES A, B, AND D.

E. RESTORE FLOW TO THE EXISTING 12" CI STRAWBERRY HILL AVENUE WATER MAIN.

STEP 2

A. INSTALL 6" LINE STOP IN BEACON STREET WATER MAIN NEAR STA 33+25.

B. CLOSE VALVE E.

C. CUT OUT A SECTION OF THE EXISTING 6" CI WATER MAIN AND INSTALL A 6"X6"X6" MJ TEE, TWO 6" GATE VALVES (5,6), AND TWO 6" CI TO DI TRANSITION COUPLINGS.

D. INSTALL A TEMPORARY 6" MJ PLUG IN VALVE 6 AND CLOSE VALVE 6.

E. REMOVE THE 6" LINE STOP AND SECURE.

F. OPEN VALVES 5 AND E.

G. RESTORE FLOW TO THE EXISTING 6" BEACON STREET WATER MAIN.

STEP 3

A. INSTALL 12" LINE STOP IN STRAWBERRY HILL AVENUE WATER MAIN NEAR STA 16+90.

B. CLOSE VALVES D, E, F, G, AND 5.

C. CUT OUT A SECTION OF THE EXISTING 12" CI WATER MAIN AND INSTALL A 12"X12"X12" MJ TEE, A 12" GATE VALVE (4), AND TWO 12" CI TO DI TRANSITION COUPLINGS.

D. INSTALL A TEMPORARY 12" MJ PLUG IN VALVE 4.

E. REMOVE THE 12" LINE STOP AND SECURE.

F. OPEN VALVES D, E, F, G, AND 5.

G. RESTORE FLOW TO THE EXISTING 12" STRAWBERRY HILL AVENUE WATER MAIN.

STEP 4

A. REMOVE TEMPORARY MJ PLUG IN VALVE 1 AND INSTALL NEW 12" WATER MAIN, FITTINGS AND VALVES ON WEST SIDE OF BRIDGE FROM VALVE 1 TO VALVE 4.

B. REMOVE TEMPORARY MJ PLUG IN VALVE 6 AND INSTALL 6" AND 8" WATER MAINS AND FITTINGS TO 12"X12"X8" MJ TEE.

C. INSTALL CORPORATION STOPS FOR CHLORINATION AND TESTING IMMEDIATELY DOWNSTREAM OF VALVES 1, 4, AND 6.

D. INSTALL 8"X4" MJ REDUCER AND TEMPORARY 4" BLOW OFF ASSEMBLY DOWNSTREAM OF VALVE 7.

E. FLUSH, DISINFECT, AND TEST NEW WATER MAIN INSTALLATION ACCORDING TO SPECIFICATIONS.

F. REMOVE TEMPORARY BLOW OFF ASSEMBLY AND 8"X4" MJ REDUCER AND INSTALL 8" MJ PLUG IN GATE VALVE 7.

G. CLOSE VALVES D, E, AND 9.

H. OPEN VALVES 1, 4 AND 6 AND PLACE NEW WATER MAIN IN SERVICE.

STEP 5

A. CLOSE VALVES B, AND 1.

B. INSTALL 12" MJ PLUG ON NORTH SIDE OF GATE VALVE 9 AND CAP END OF EXISTING 12" WATER MAIN.

C. INSTALL THRUST BLOCK BETWEEN GATE VALVE 9 AND EXISTING WATER MAIN.

D. OPEN VALVES B, AND 1.

STEP 6

A. CLOSE VALVES E AND 5.

B. INSTALL 6" MJ PLUG IN EAST SIDE OF VALVE 5 AND CAP END OF EXISTING 6" WATER MAIN.

C. INSTALL THRUST BLOCK BETWEEN GATE VALVE 5 AND EXISTING WATER MAIN.

STEP 7

A. REINSTALL LINE STOP ON EXISTING 12" WATER MAIN NEAR STA 16+90.

B. CLOSE VALVES 4, F AND G.

C. CUT AND INSTALL MJ CAPS ON BOTH ENDS OF EXISTING WATER MAIN.

D. INSTALL THRUST BLOCK BETWEEN MJ CAPS.

E. OPEN VALVES 4, F, AND G.

F. REMOVE THE 12" LINE STOP AND SECURE.

G. REMOVE EXISTING WATER MAIN ON EAST SIDE OF BRIDGE.

DESIGNED BY:
AECOM
AECOM
500 ENTERPRISE DRIVE
ROCKY HILL, CT 06067

STATE OF CONNECTICUT PROFESSIONAL ENGINEER
John Hapkiewicz
2019.01.09 15:42:37 -05'00'

ADDENDUM No. 1

REV.	DATE	REVISION DESCRIPTION	SHEET NO.
–	–	–	–
–	–	–	–
–	–	–	–
–	–	–	–
–	–	–	–
1	12/21/18	SHEET REPLACED	07.04.A1

THE INFORMATION, INCLUDING ESTIMATED QUANTITIES OF WORK, SHOWN ON THESE SHEETS IS BASED ON LIMITED INVESTIGATIONS BY THE STATE AND IS IN NO WAY WARRANTED TO INDICATE THE CONDITIONS OF ACTUAL QUANTITIES OF WORK WHICH WILL BE REQUIRED.

Plotted: 7/05/2018

DESIGNER/DRAFTER: C. HALLORAN
CHECKED BY: C. DOUGHERTY
HORIZ. SCALE (FT) 0 30 60
SCALE 1"=30

STATE OF CONNECTICUT
DEPARTMENT OF TRANSPORTATION

SIGNATURE/BLOCK: AECOM 500 ENTERPRISE DRIVE ROCKY HILL, CT 06067

PROJECT TITLE: REHABILITATION OF BRIDGE 00061 STRAWBERRY HILL AVENUE OVER I-95

TOWN: NORWALK

DRAWING TITLE: WATER MAIN

PROJECT NO. 102-363
DRAWING NO. WTR-01
SHEET NO. 07.01.A1

X:\60509451 Branford DOT 14-185\400-Technical\401 Info from CME\Working File.dwg

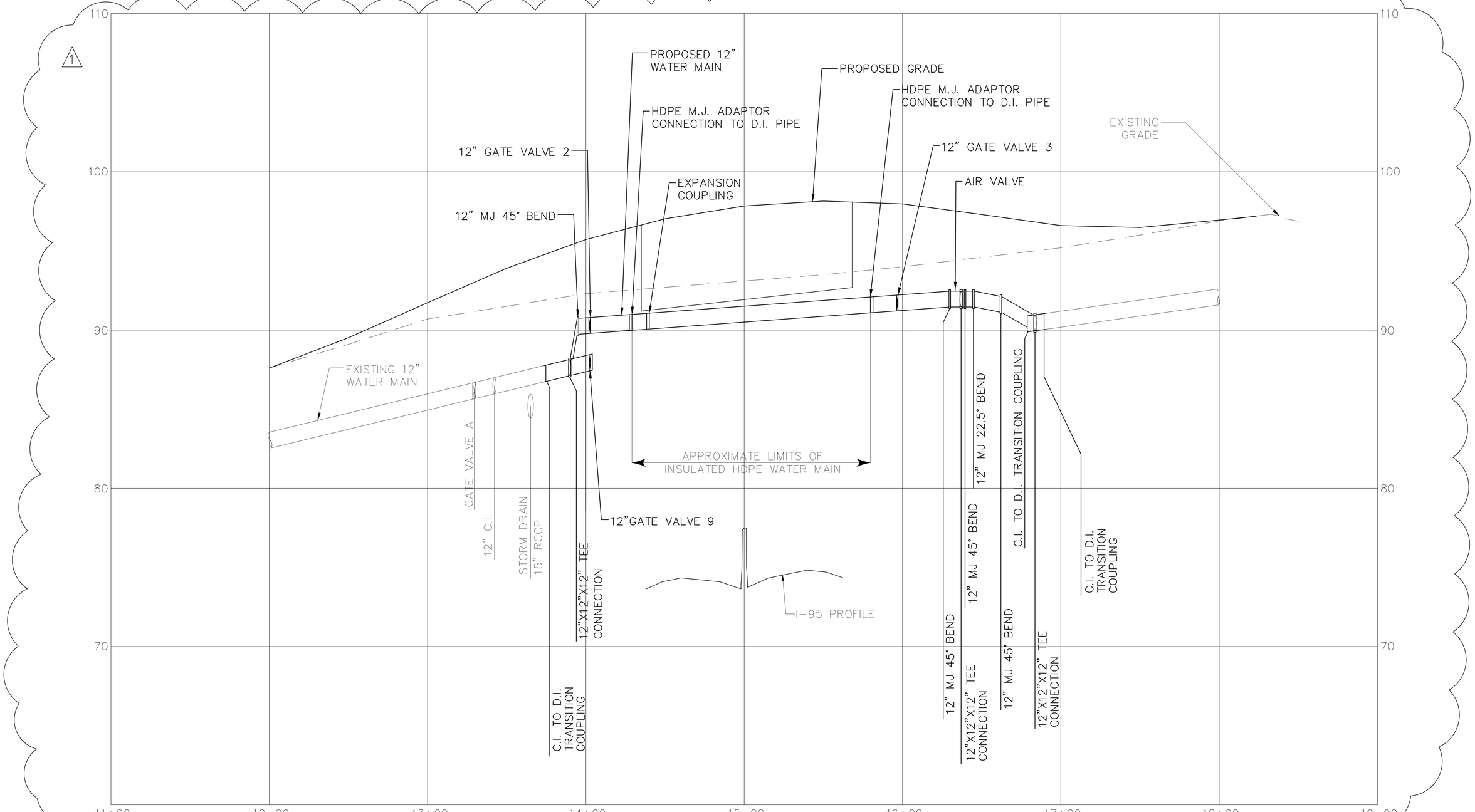

PROFILE

VERTICAL SCALE (FT)
0 3 6
SCALE 1"=3'

ADDENDUM No. 1

REV.	DATE	REVISION DESCRIPTION	SHEET NO.
–	–	–	–
–	–	–	–
–	–	–	–
–	–	–	–
–	–	–	–
1	12/21/18	SHEET REPLACED	07.04.A1

THE INFORMATION, INCLUDING ESTIMATED QUANTITIES OF WORK, SHOWN ON THESE SHEETS IS BASED ON LIMITED INVESTIGATIONS BY THE STATE AND IS IN NO WAY WARRANTED TO INDICATE THE CONDITIONS OF ACTUAL QUANTITIES OF WORK WHICH WILL BE REQUIRED.

Plotted: 7/05/2018

DESIGNER/DRAFTER: C. HALLORAN
CHECKED BY: C. DOUGHERTY
HORIZ. SCALE (FT)
0 30 60
SCALE 1"=30

STATE OF CONNECTICUT
DEPARTMENT OF TRANSPORTATION

SIGNATURE/BLOCK:
AECOM
500 ENTERPRISE DRIVE
ROCKY HILL, CT 06067

PROJECT TITLE:
REHABILITATION OF BRIDGE 00061
STRAWBERRY HILL AVENUE
OVER I-95

TOWN: NORWALK

DRAWING TITLE: WATER MAIN PROFILE

PROJECT NO. 102-363
DRAWING NO. WTR-02
SHEET NO. 07.02.A1

X:\60509451 Branford DOT 14-185\400-Technical\401 Info from CME\Working File.dwg

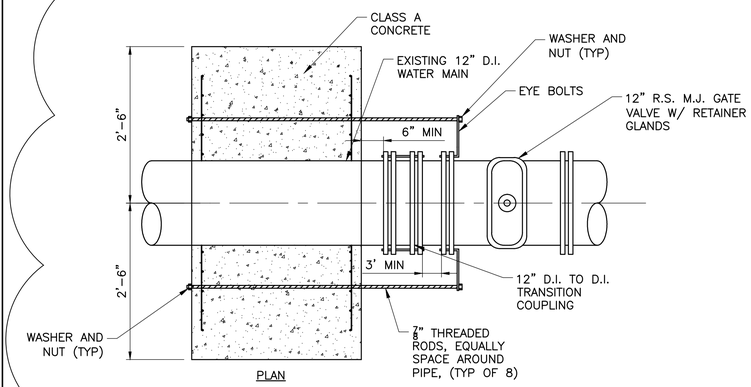

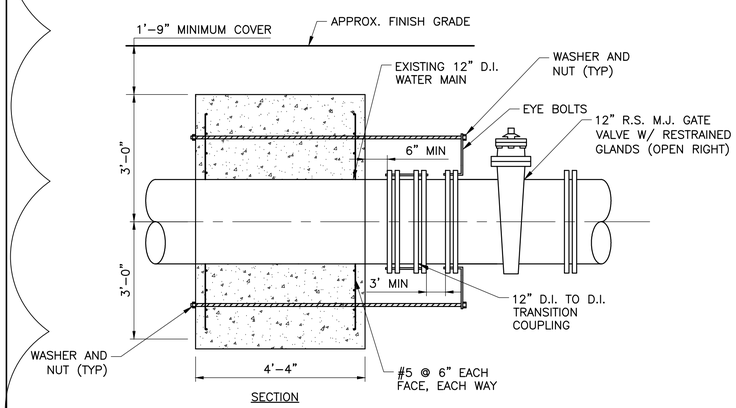

12" WATER THRUST BLOCK DETAIL

NOTE: THRUST BLOCK DESIGN ASSUMES A WORKING PRESSURE OF 55 PSI. CONTACT THE ENGINEER IF FIELD CONDITIONS DIFFER.

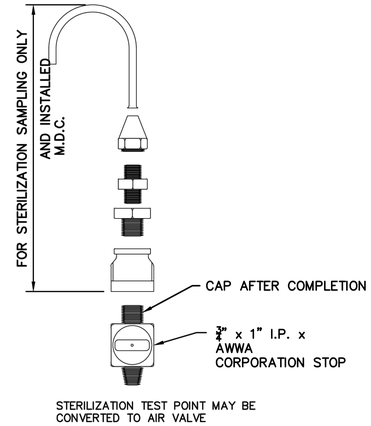

TEST PORT

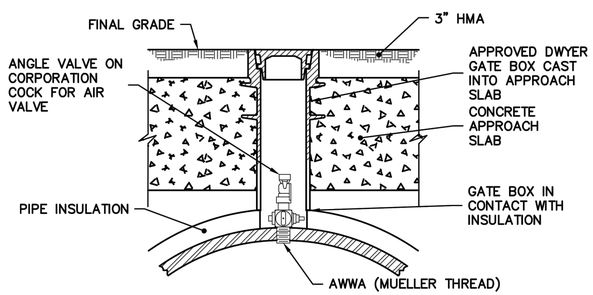

NOTE:
STAINLESS STEEL AIR VALVES SHALL BE USED IN AREAS SUBJECT TO ATMOSPHERIC EXPOSURE OR IN AREAS SUBJECT TO EXPOSURE FROM INCREASED ROAD SALT RUN OFF, SUCH AS BRIDGE CROSSINGS.

DIA. OF MAIN	MIN. SIZE AIR VALVE	CORPORATION COCK	ANGLE VALVE SIZE
TO 12 INCH (INCL.)	3/4 INCH	3/4 INCH x 1 INCH	1 INCH

AIR VALVE
(STANDARD MINIMUM SIZES)

GENERAL WATER MAIN NOTES

1. ALL CONSTRUCTION SHALL BE IN ACCORDANCE WITH FIRST TAXING DISTRICT WATER DEPARTMENT (FTDWD) STANDARDS AND SPECIFICATIONS.
2. THE 12 INCH PIPE AND FITTINGS WITH INSULATION AND APPURTENANCES WILL BE PAID FOR UNDER THE ITEM FURNISHING AND INSTALLING 12" WATER MAIN & FURNISHING AND INSTALLING 12" WATER MAIN ON BRIDGE. STEEL PLATES, HIGH STRENGTH BOLTS, U-BOLTS, ADJUSTABLE SUPPORT ROLLERS AND RESTRAINED JOINTS, WILL BE PAID FOR UNDER THE ITEM "WATER MAIN SUPPORT SYSTEM."
3. ALL PIPE AND BENDS BETWEEN THE LIMITS SHOWN IN THE SCHEMATIC ELEVATION VIEW SHALL BE INSULATED. INSULATION SHALL EXTEND INTO THE PIPE SLEEVE THROUGH THE BACKWALL UP TO THE LINK-SEAL. THE PORTION OF PIPE PASSING THROUGH THE THRUST BLOCK SHALL NOT BE INSULATED.
4. THE MINIMUM ALLOWABLE CLEARANCE BETWEEN THE 12 INCH INSULATED WATER MAIN AND CONCRETE DIAPHRAGMS SHALL BE 1 INCH.
5. THE MAXIMUM PIPE JOINT DEFLECTION AT ANY MECHANICAL COUPLING SHALL BE 2 DEGREES.
6. NO MORE THAN TWO PIPE JOINT DEFLECTIONS SHALL BE ALLOWED PER BRIDGE SPAN.
7. WHERE "PULLING" OR DEFLECTING PIPE IS INDICATED, SUCH DEFLECTION SHALL BE DONE IN ACCORDANCE WITH THE RECOMMENDATIONS OF "THE DIPRA HANDBOOK." IN NO CASE SHOULD THE DEFLECTION BE GREATER THAN FIVE DEGREES.
8. THE WATER MAIN SHALL BE BUILT BY A LICENSED PLUMBER UNDER THE SUPERVISION OF THE FTDWD DIRECTOR OF ENGINEERING AND PLANNING OR THEIR DESIGNEE.
9. "CALL BEFORE YOU DIG" – THE CONTRACTOR IS HEREBY REMINDED THAT TITLE 16, CHAPTER 293 OF THE CONNECTICUT GENERAL STATUTES REQUIRES NOTIFICATION OF THE UTILITY COMPANIES OF PENDING EXCAVATION AT OR NEAR PUBLIC UTILITIES. THE CONTRACTOR SHALL CALL 1-800-922-4455 AT LEAST 48 HOURS PRIOR TO BEGINNING THE EXCAVATION.
10. ALL FEDERAL AND STATE OSHA SAFETY STANDARDS MUST BE FOLLOWED DURING WATER MAIN INSTALLATIONS AND TESTING, INCLUDING 29 CFR 1926.650 – 1926.652, THAT ADDRESSES EXCAVATION WORK AND REQUIREMENTS FOR PROTECTIVE SYSTEMS.
11. TEST PITS SHALL BE DUG WELL IN ADVANCE OF THE WATER MAIN INSTALLATION TO DETERMINE POSSIBLE OFFSETS ABOVE OR BELOW OTHER UTILITIES, STRUCTURES OR OBSTACLES.
12. THE CONTRACTOR SHALL FURNISH TO THE ENGINEER A MATERIALS LIST, FOR APPROVAL, PRIOR TO THE INSTALLATION OF THE PROPOSED WATER MAIN.
13. TEST PRESSURE SHALL BE 200 (TWO HUNDRED) PSI, AS DETERMINED BY THE FTDWD.
14. GATE OPERATIONS FOR THIS PROJECT SHALL BE "OPEN RIGHT."
15. TEMPORARY PAVING RESTORATION SHALL BE MADE IN ACCORDANCE WITH TOWN/CITY AND/OR STATE SPECIFICATIONS. PERMANENT PAVEMENT RESTORATION SHALL BE AS SHOWN ON BRIDGE DESIGN DRAWINGS.
16. THE FIRST TAXING DISTRICT WATER DEPARTMENT (FTDWD) WILL PERMIT THE WATER MAIN TO BE SHUT OFF FOR A MAXIMUM WINDOW OF 4 HOURS AT A TIME DUE TO THE FIRE PROTECTION REQUIREMENTS. IN THE EVENT OF AN EMERGENCY, THE FTDWD MAY REQUIRE THAT THE WATER MAIN BE RETURNED TO IMMEDIATE ACTIVE CONDITION.
17. CONTRACTOR SHALL ASSIST THE FTDWD STAFF WITH THE FILLING, FLUSHING AND TESTING OF THE WATER MAIN. THE CONTRACTOR SHALL ABIDE BY THE FTDWD'S STANDARDS FOR DISINFECTING WATER MAINS, INCLUDING PROPERLY NEUTRALIZING THE CHLORINATED WATER AND DISCHARGING THE WATER ACCORDINGLY.
18. USE EBAA IRON INC. SERIES 1700 RESTRAINT HARNESS OR APPROVED EQUAL DURING D.I. PIPE ASSEMBLY.
19. CONCRETE FOR THE THRUST BLOCKS SHALL BE "CLASS "A" CONCRETE." REINFORCING STEEL SHALL BE UNCOATED DEFORMED STEEL BARS CONFORMING TO ASTM A615, GRADE 60. PAYMENT SHALL BE MADE UNDER FURNISHING AND INSTALLING 12" WATER MAIN.
20. REFER TO BRIDGE DRAWINGS FOR PIPE HANGERS AND SUPPORTS FOR HDPE WATER MAIN ATTACHED TO THE BRIDGE

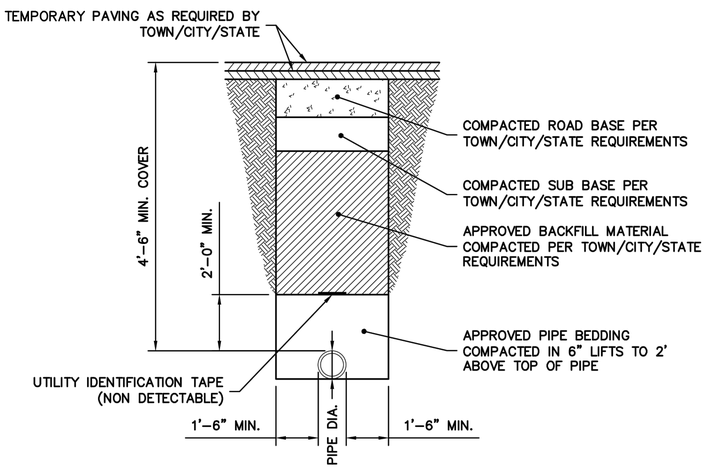

TYPICAL WATER MAIN TRENCH SECTION

NOTE: IF ROCK ENCOUNTERED ADD 6" OF BEDDING BELOW WATER MAIN.

ADDENDUM No. 1

REV.	DATE	REVISION DESCRIPTION	SHEET NO.
–	–	–	–
–	–	–	–
–	–	–	–
–	–	–	–
–	–	–	–
–	–	–	–
1	12/21/18	SHEET REPLACED	07.04.A1

Plotted: 7/05/2018

THE INFORMATION, INCLUDING ESTIMATED QUANTITIES OF WORK, SHOWN ON THESE SHEETS IS BASED ON LIMITED INVESTIGATIONS BY THE STATE AND IS IN NO WAY WARRANTED TO INDICATE THE CONDITIONS OF ACTUAL QUANTITIES OF WORK WHICH WILL BE REQUIRED.

DESIGNER/DRAFTER: C. HALLORAN
CHECKED BY: C. DOUGHERTY
HORIZ. SCALE (FT) 0 30 60
SCALE 1"=30

STATE OF CONNECTICUT
DEPARTMENT OF TRANSPORTATION

SIGNATURE/BLOCK:
AECOM
500 ENTERPRISE DRIVE
ROCKY HILL, CT 06067

PROJECT TITLE:
REHABILITATION OF BRIDGE 00061
STRAWBERRY HILL AVENUE
OVER I-95

TOWN: NORWALK

DRAWING TITLE: WATER MAIN DETAILS 1

PROJECT NO. 102-363
DRAWING NO. WTR-03
SHEET NO. 07.03.A1

X:\60509451 Branford DOT 14-185\400-Technical\401 Info from CME\Working File.dgn

1

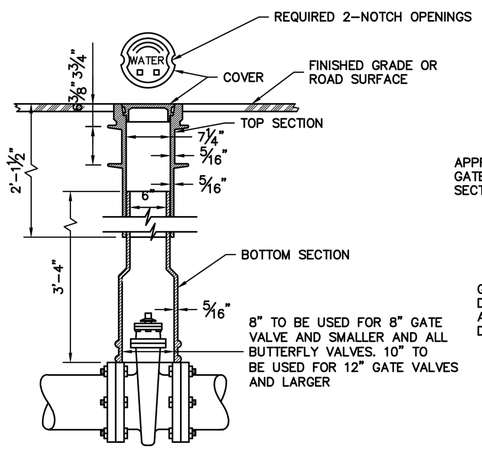

STANDARD GATE BOX (DWYER TYPE)

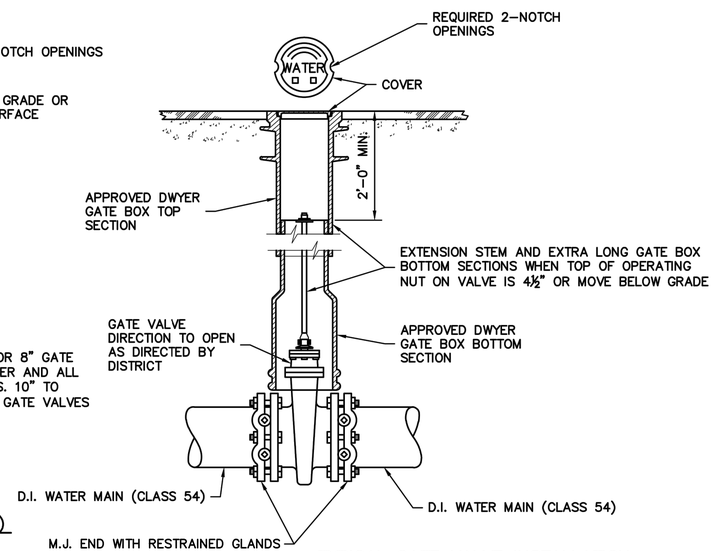

TYPICAL GATE VALVE INSTALLATION (12" AND SMALLER)

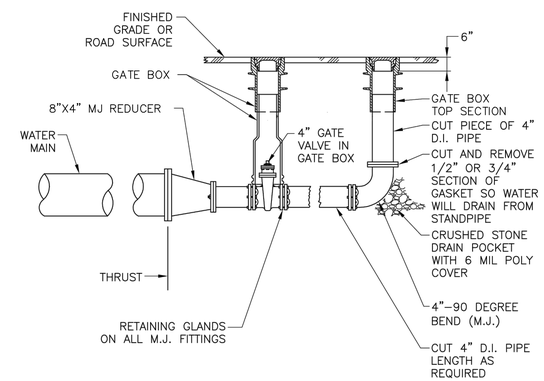

TEMPORARY 4-INCH BLOW-OFF ASSEMBLY (END OF MAIN)

ADDENDUM No. 1

REV.	DATE	REVISION DESCRIPTION	SHEET NO.
–	–	–	–
–	–	–	–
–	–	–	–
–	–	–	–
–	–	–	–
1	12/21/18	SHEET REPLACED	07.04.A1

THE INFORMATION, INCLUDING ESTIMATED QUANTITIES OF WORK, SHOWN ON THESE SHEETS IS BASED ON LIMITED INVESTIGATIONS BY THE STATE AND IS IN NO WAY WARRANTED TO INDICATE THE CONDITIONS OF ACTUAL QUANTITIES OF WORK WHICH WILL BE REQUIRED.

Plotted: 7/05/2018

DESIGNER/DRAFTER: C. HALLORAN
CHECKED BY: C. DOUGHERTY
HORIZ. SCALE (FT) 0 30 60
SCALE 1"=30

STATE OF CONNECTICUT
DEPARTMENT OF TRANSPORTATION

SIGNATURE/BLOCK:
AECOM
500 ENTERPRISE DRIVE
ROCKY HILL, CT 06067

PROJECT TITLE:
REHABILITATION OF BRIDGE 00061
STRAWBERRY HILL AVENUE
OVER I-95

TOWN: NORWALK

DRAWING TITLE: WATER MAIN DETAILS 2

PROJECT NO. 102-363
DRAWING NO. WTR-04
SHEET NO. 07.04.A1

X:\60509451 Branford DOT 14-185\400- Technical\401 Info from CME\Working File.dwg