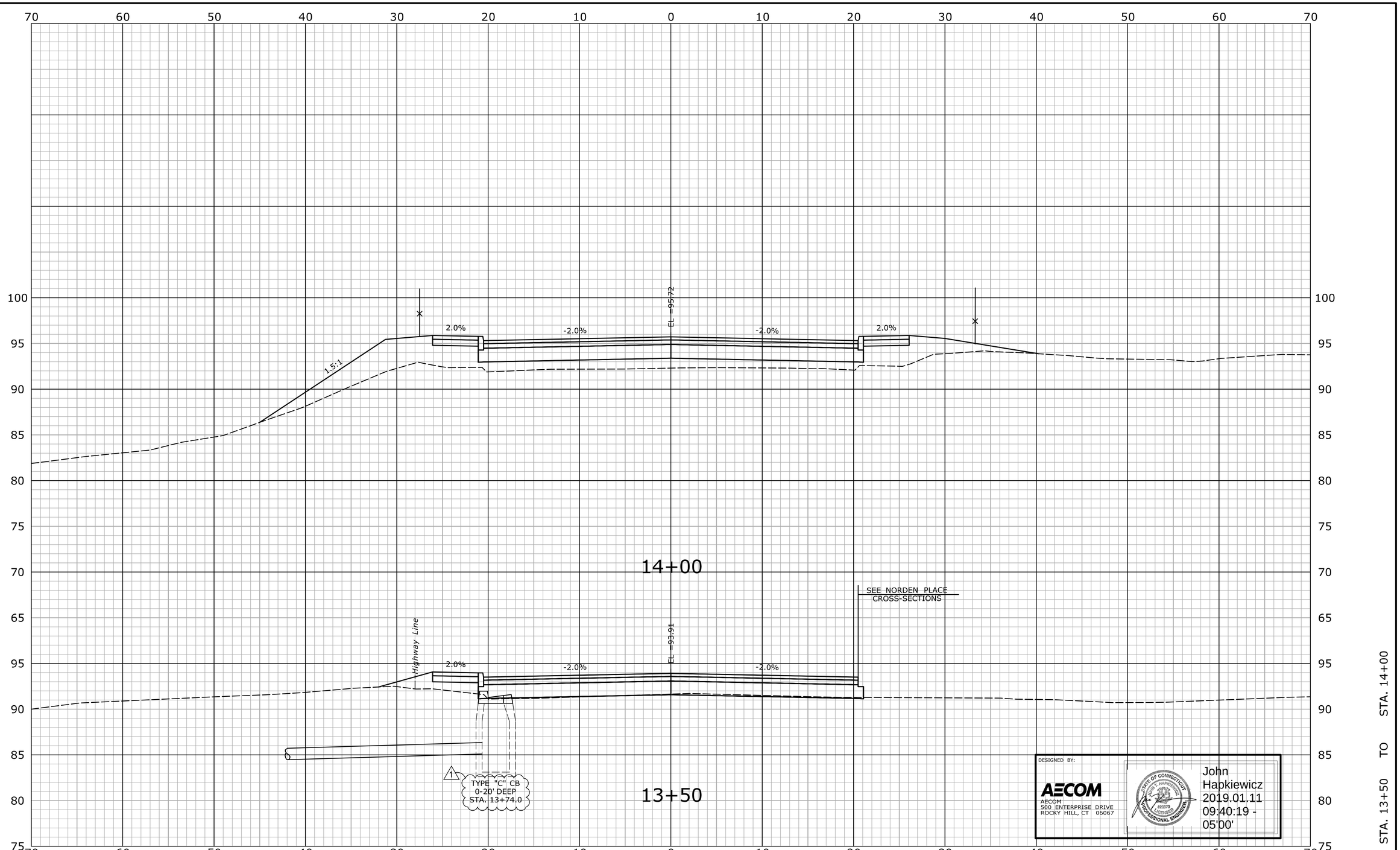

DESIGNED BY:

AECOM
AECOM
500 ENTERPRISE DRIVE
ROCKY HILL, CT 06067

STATE OF CONNECTICUT
JOHN T. HAPKIEWICZ
22370
LICENSED
PROFESSIONAL ENGINEER

John Hapkiewicz
2019.01.11
09:40:19 -
05'00'

ADDENDUM NO. 1

REV.	DATE	REVISION DESCRIPTION	SHEET NO.
1	12/21/18	REVISED CATCH BASIN TYPES	04.03.A1

THE INFORMATION, INCLUDING ESTIMATED QUANTITIES OF WORK, SHOWN ON THESE SHEETS IS BASED ON LIMITED INVESTIGATIONS BY THE STATE AND IS IN NO WAY WARRANTED TO INDICATE THE CONDITIONS OF ACTUAL QUANTITIES OF WORK WHICH WILL BE REQUIRED.

Plotted Date: 1/7/2019

DESIGNER/DRAFTER: P. GILKEY
CHECKED BY: J. KEEFE
SCALE IN FEET 0 5 10
SCALE 1"=5'

STATE OF CONNECTICUT
DEPARTMENT OF TRANSPORTATION

Filename: ...\HW_MSH_102_363_XSC-STRAWBERRY-A1.dgn

AECOM
500 ENTERPRISE DRIVE
ROCKY HILL, CT 06067

PROJECT TITLE:
REHABILITATION OF BRIDGE 00061
STRAWBERRY HILL AVENUE
OVER I-95

TOWN: **NORWALK**

DRAWING TITLE: **STRAWBERRY HILL AVE CROSS SECTIONS**

PROJECT NO. **102-363**
DRAWING NO. **XSC-02**
SHEET NO. **04.03.A1**

1/7/2019
P:\Projects\Conn0ot\36937900\500 CADD-GIS-Graphics\510 CADD\510.03 Highways\MSta Contract Sheet Files\HW_MSH_102_363_XSC-STRAWBERRY-A1.dgn

Border Version: 11/14/08

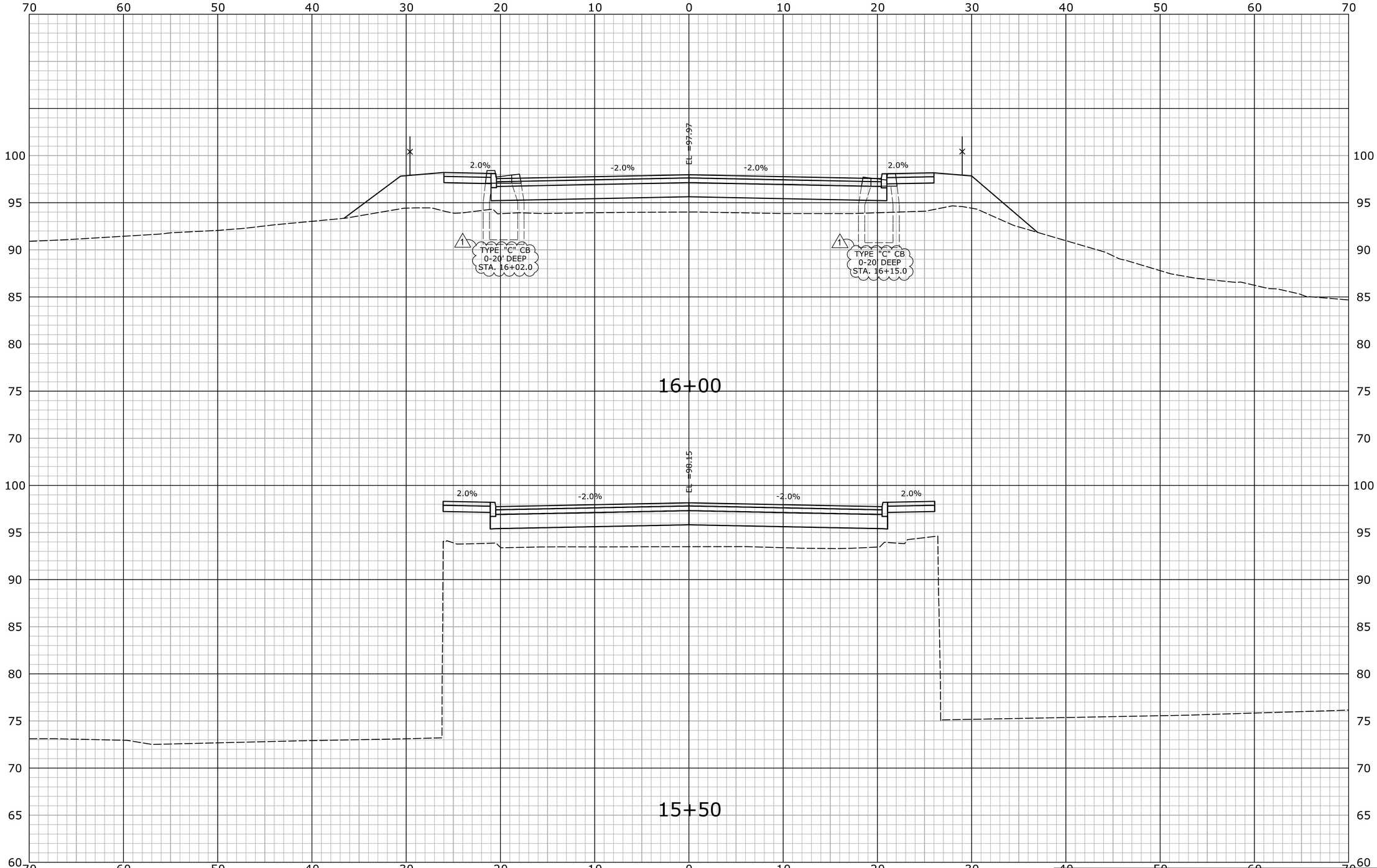

STA. 15+50 TO STA. 16+00

ADDENDUM NO. 1

REV.	DATE	REVISION DESCRIPTION	SHEET NO.
1	12/21/18	REVISED CATCH BASIN TYPES	04.05.A1

THE INFORMATION, INCLUDING ESTIMATED QUANTITIES OF WORK, SHOWN ON THESE SHEETS IS BASED ON LIMITED INVESTIGATIONS BY THE STATE AND IS IN NO WAY WARRANTED TO INDICATE THE CONDITIONS OF ACTUAL QUANTITIES OF WORK WHICH WILL BE REQUIRED.

Plotted Date: 1/7/2019

DESIGNER/DRAFTER: P. GILKEY

CHECKED BY: J. KEEFE

SCALE IN FEET 0 5 10

SCALE 1"=5'

STATE OF CONNECTICUT
DEPARTMENT OF TRANSPORTATION

Filename: ...\HW_MSH_102_363_XSC-STRAWBERRY-A1.dgn

AECOM
500 ENTERPRISE DRIVE
ROCKY HILL, CT 06067

PROJECT TITLE:
REHABILITATION OF BRIDGE 00061
STRAWBERRY HILL AVENUE
OVER I-95

TOWN: **NORWALK**

DRAWING TITLE: **STRAWBERRY HILL AVE CROSS SECTIONS**

PROJECT NO. **102-363**

DRAWING NO. **XSC-04**

SHEET NO. **04.05.A1**

1/7/2019
P:\Projects\ConnDot\36937900\500 CADD-GIS-Graphics\510 CADD\510.03 Highways\MSta Contract Sheet Files\HW_MSH_102_363_XSC-STRAWBERRY-A1.dgn

Border Version: 11/14/08

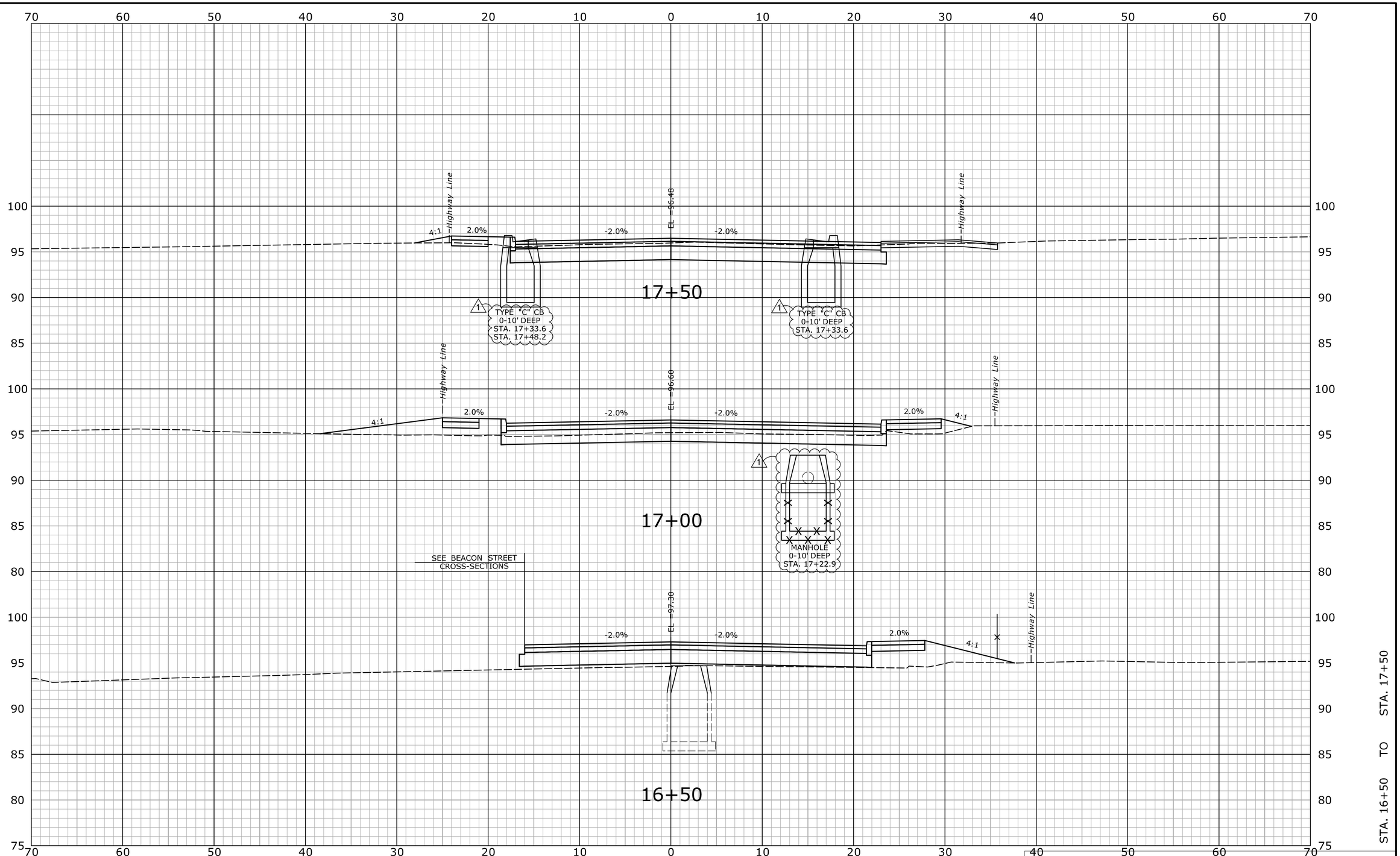

ADDENDUM NO. 1

REV.	DATE	REVISION DESCRIPTION	SHEET NO.
1	12/21/18	REVISED CATCH BASIN TYPES	04.06.A1

THE INFORMATION, INCLUDING ESTIMATED QUANTITIES OF WORK, SHOWN ON THESE SHEETS IS BASED ON LIMITED INVESTIGATIONS BY THE STATE AND IS IN NO WAY WARRANTED TO INDICATE THE CONDITIONS OF ACTUAL QUANTITIES OF WORK WHICH WILL BE REQUIRED.

Plotted Date: 1/7/2019

DESIGNER/DRAFTER: P. GILKEY

CHECKED BY: J. KEEFE

SCALE IN FEET 0 5 10

SCALE 1"=5'

STATE OF CONNECTICUT
DEPARTMENT OF TRANSPORTATION

Filename: ...\HW_MSH_102_363_XSC-STRAWBERRY-A1.dgn

AECOM
500 ENTERPRISE DRIVE
ROCKY HILL, CT 06067

PROJECT TITLE:
REHABILITATION OF BRIDGE 00061
STRAWBERRY HILL AVENUE
OVER I-95

TOWN: **NORWALK**

DRAWING TITLE: **STRAWBERRY HILL AVE CROSS SECTIONS**

PROJECT NO. **102-295**

DRAWING NO. **XSC-05**

SHEET NO. **04.06.A1**

1/7/2019
P:\Projects\CombOut\36937900\500 CADD-GIS-Graphics\510 CADD\510.03 Highways\MSta. Contract Sheet Files\HW_MSH_102_363_XSC-STRAWBERRY-A1.dgn

Border Version: 11/14/08

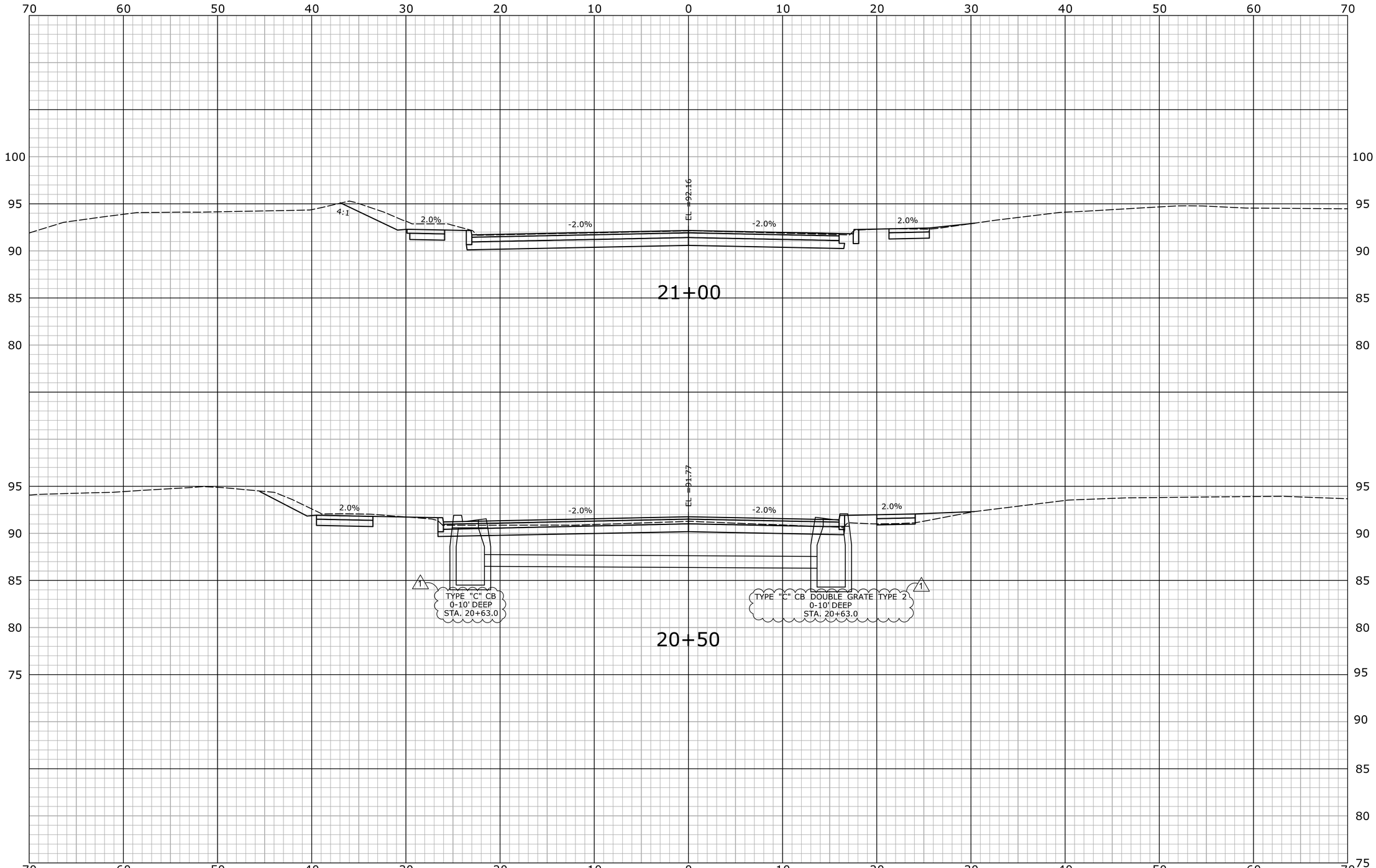

ADDENDUM NO. 1

REV.	DATE	REVISION DESCRIPTION	SHEET NO.
1	12/21/18	REVISED CATCH BASIN TYPES	04.10.A1

THE INFORMATION, INCLUDING ESTIMATED QUANTITIES OF WORK, SHOWN ON THESE SHEETS IS BASED ON LIMITED INVESTIGATIONS BY THE STATE AND IS IN NO WAY WARRANTED TO INDICATE THE CONDITIONS OF ACTUAL QUANTITIES OF WORK WHICH WILL BE REQUIRED.

Plotted Date: 1/11/2019

DESIGNER/DRAFTER: P. GILKEY

CHECKED BY: J. KEEFE

SCALE IN FEET 0 5 10

SCALE 1"=5'

STATE OF CONNECTICUT
DEPARTMENT OF TRANSPORTATION

Filename: ...\HW_MSH_102_363_XSC-NORDEN_BEACON-A1.dgn

AECOM
500 ENTERPRISE DRIVE
ROCKY HILL, CT 06067

PROJECT TITLE:
REHABILITATION OF BRIDGE 00061
STRAWBERRY HILL AVENUE
OVER I-95

TOWN: **NORWALK**

DRAWING TITLE: **NORDEN PLACE CROSS SECTIONS**

PROJECT NO. **102-363**

DRAWING NO. **XSC-09**

SHEET NO. **04.10.A1**

1/11/2019
P:\Projects\ConnDot\36937900\500 CADD-GIS-Graphics\510 CADD\510.03 Highways\MSta. Contract Sheet Files\HW_MSH_102_363_XSC-NORDEN_BEACON-A1.dgn

Border Version: 11/14/08

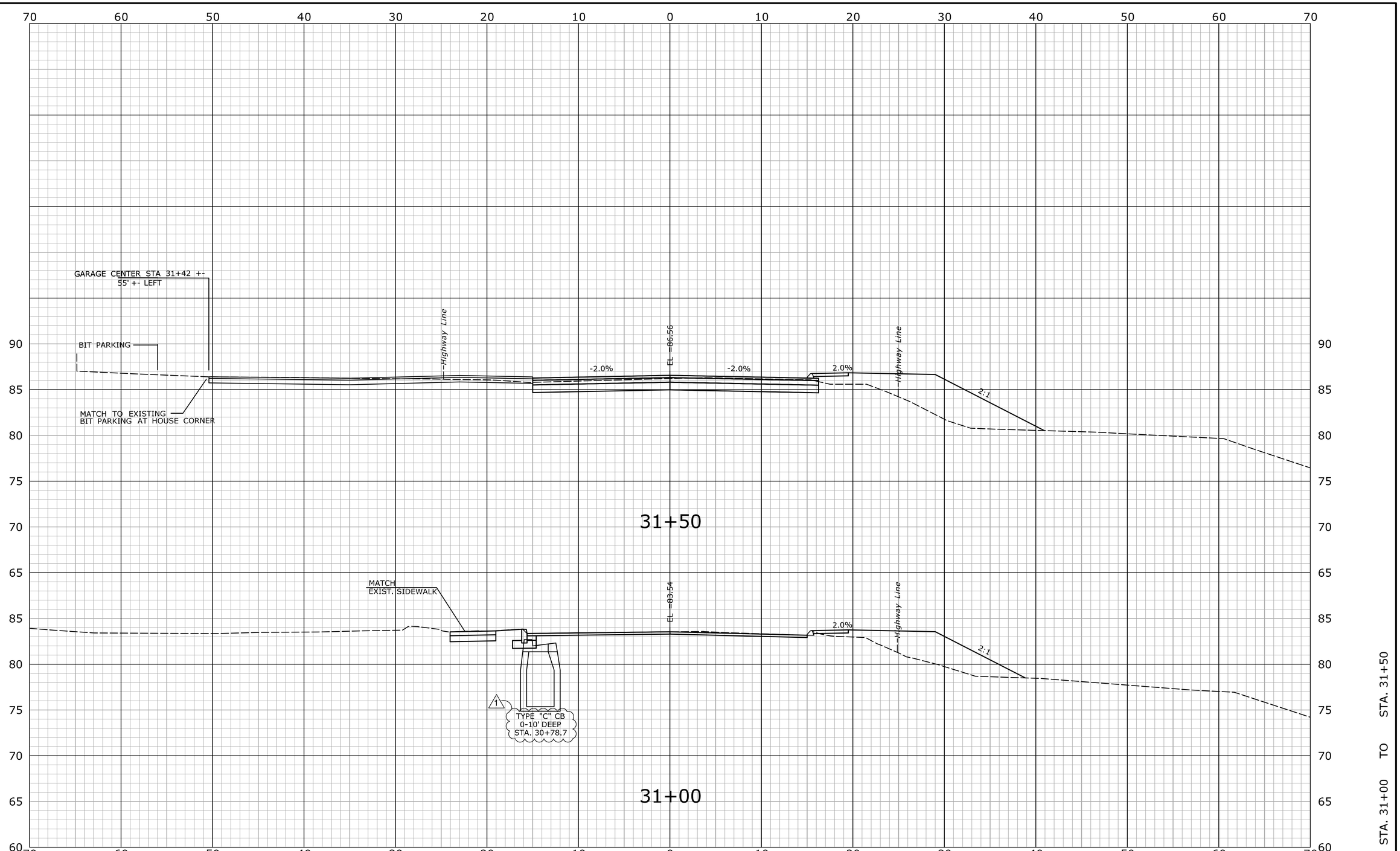

ADDENDUM NO. 1

REV.	DATE	REVISION DESCRIPTION	SHEET NO.
1	12/21/18	REVISED CATCH BASIN TYPES	04.11.A1

THE INFORMATION, INCLUDING ESTIMATED QUANTITIES OF WORK, SHOWN ON THESE SHEETS IS BASED ON LIMITED INVESTIGATIONS BY THE STATE AND IS IN NO WAY WARRANTED TO INDICATE THE CONDITIONS OF ACTUAL QUANTITIES OF WORK WHICH WILL BE REQUIRED.

Plotted Date: 1/11/2019

DESIGNER/DRAFTER: P. GILKEY

CHECKED BY: J. KEEFE

SCALE IN FEET 0 5 10

SCALE 1"=5'

STATE OF CONNECTICUT
DEPARTMENT OF TRANSPORTATION

Filename: ...\HW_MSH_102_363_XSC-NORDEN_BEACON-A1.dgn

AECOM
500 ENTERPRISE DRIVE
ROCKY HILL, CT 06067

PROJECT TITLE:
REHABILITATION OF BRIDGE 00061
STRAWBERRY HILL AVENUE
OVER I-95

TOWN: **NORWALK**

DRAWING TITLE: **BEACON STREET CROSS SECTIONS**

PROJECT NO. **102-363**

DRAWING NO. **XSC-10**

SHEET NO. **04.11.A1**

1/11/2019
P:\Projects\Conn0ot\36937900\500 CADD-GIS-Graphics\510 CADD\510.03 Highways\MSta Contract Sheet Files\HW_MSH_102_363_XSC-NORDEN_BEACON-A1.dgn

Border Version: 11/14/08

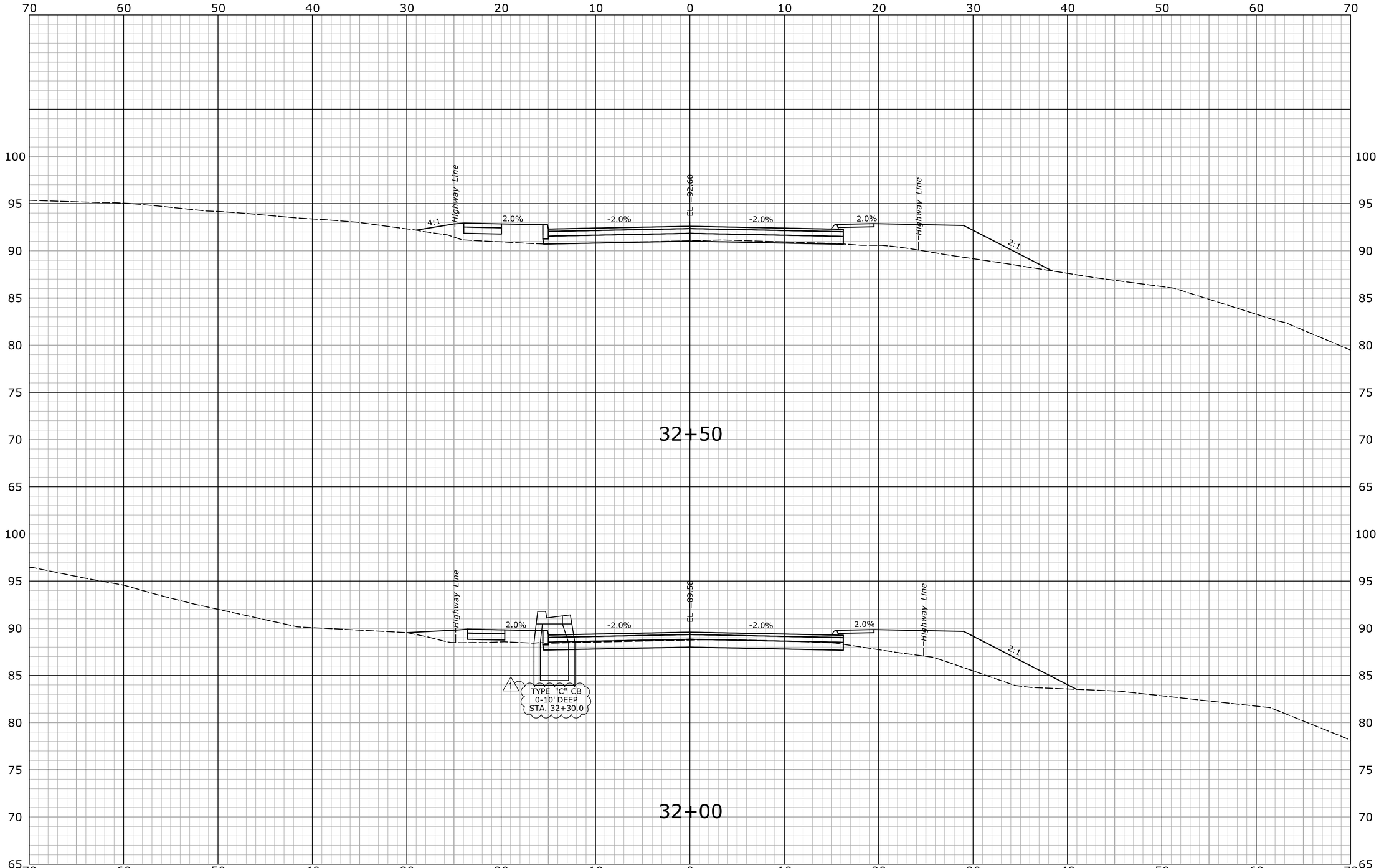

STA. 32+00 TO STA. 32+50

ADDENDUM NO. 1

REV.	DATE	REVISION DESCRIPTION	SHEET NO.
1	12/21/18	REVISED CATCH BASIN TYPES	04.12.A1

THE INFORMATION, INCLUDING ESTIMATED QUANTITIES OF WORK, SHOWN ON THESE SHEETS IS BASED ON LIMITED INVESTIGATIONS BY THE STATE AND IS IN NO WAY WARRANTED TO INDICATE THE CONDITIONS OF ACTUAL QUANTITIES OF WORK WHICH WILL BE REQUIRED.

Plotted Date: 1/11/2019

DESIGNER/DRAFTER: P. GILKEY
CHECKED BY: J. KEEFE
SCALE IN FEET 0 5 10
SCALE 1"=5'

STATE OF CONNECTICUT
DEPARTMENT OF TRANSPORTATION

Filename: ...\HW_MSH_102_363_XSC-NORDEN_BEACON-A1.dgn

AECOM
500 ENTERPRISE DRIVE
ROCKY HILL, CT 06067

PROJECT TITLE:
REHABILITATION OF BRIDGE 00061
STRAWBERRY HILL AVENUE
OVER I-95

TOWN: **NORWALK**

DRAWING TITLE: **BEACON STREET CROSS SECTIONS**

PROJECT NO. **102-363**
DRAWING NO. **XSC-11**
SHEET NO. **04.12.A1**

1/11/2019
P:\Projects\Conn0ot\36937900\500 CADD-GIS-Graphics\510 CADD\510.03 Highways\MSta Contract Sheet Files\HW_MSH_102_363_XSC-NORDEN_BEACON-A1.dgn

Border Version: 11/14/08

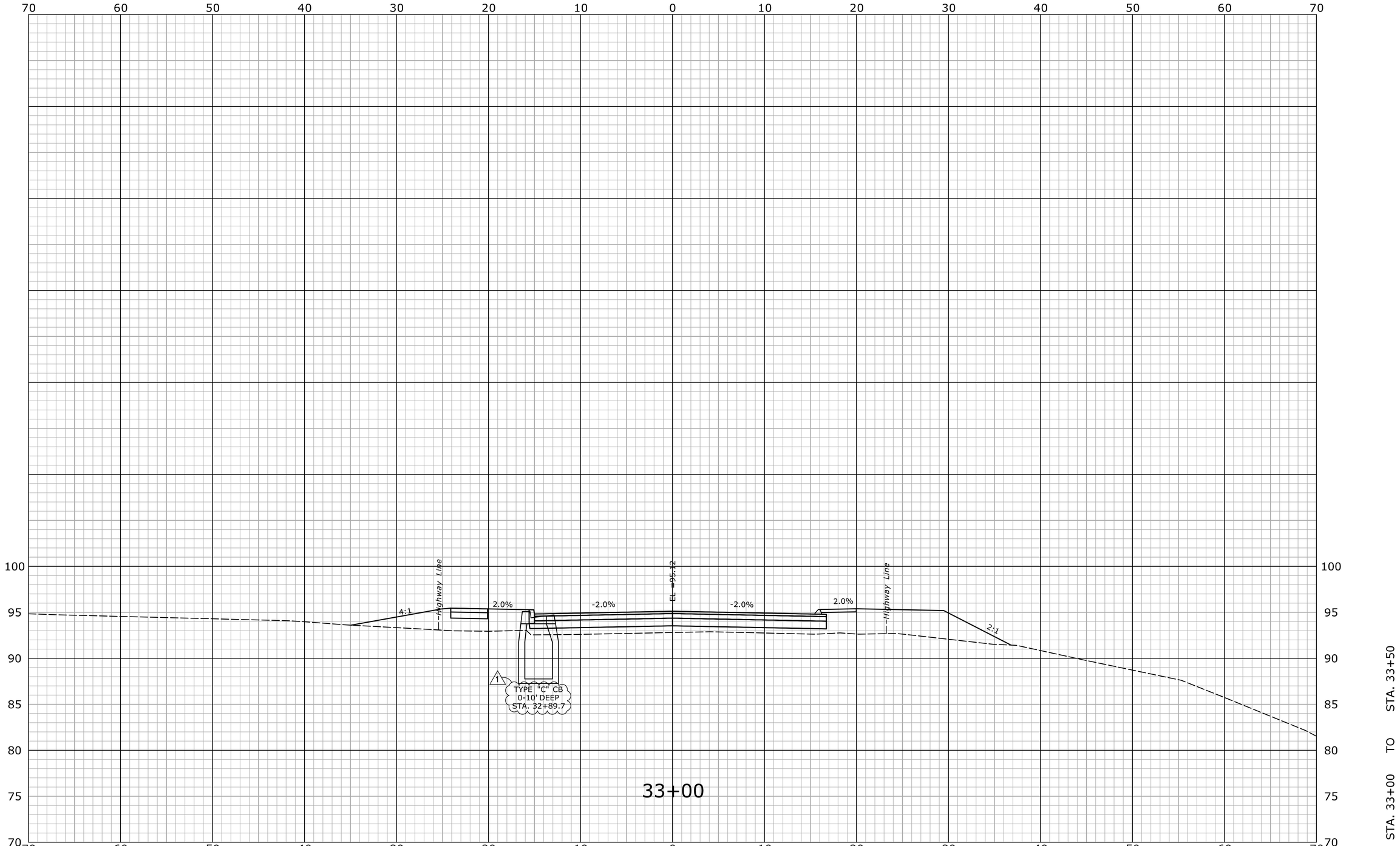

ADDENDUM NO. 1

REV.	DATE	REVISION DESCRIPTION	SHEET NO.
1	12/21/18	REVISED CATCH BASIN TYPES	04.13.A1

THE INFORMATION, INCLUDING ESTIMATED QUANTITIES OF WORK, SHOWN ON THESE SHEETS IS BASED ON LIMITED INVESTIGATIONS BY THE STATE AND IS IN NO WAY WARRANTED TO INDICATE THE CONDITIONS OF ACTUAL QUANTITIES OF WORK WHICH WILL BE REQUIRED.

Plotted Date: 1/11/2019

DESIGNER/DRAFTER: P. GILKEY
CHECKED BY: J. KEEFE
SCALE IN FEET 0 5 10
SCALE 1"=5'

STATE OF CONNECTICUT
DEPARTMENT OF TRANSPORTATION

Filename: ...\HW_MSH_102_363_XSC-NORDEN_BEACON-A1.dgn

AECOM
500 ENTERPRISE DRIVE
ROCKY HILL, CT 06067

PROJECT TITLE:
REHABILITATION OF BRIDGE 00061
STRAWBERRY HILL AVENUE
OVER I-95

TOWN: **NORWALK**

DRAWING TITLE: **BEACON STREET CROSS SECTIONS**

PROJECT NO. **102-363**
DRAWING NO. **XSC-12**
SHEET NO. **04.13.A1**

1/11/2019
P:\Projects\Conn(bot)36937900\500 CADD-GIS-Graphics\510 CADD\510.03 Highways\MSta Contract Sheet Files\HW_MSH_102_363_XSC-NORDEN_BEACON-A1.dgn

Border Version: 11/14/08