GENERAL NOTES:

SPECIFICATIONS: CONNECTICUT DEPARTMENT OF TRANSPORTATION FORM 817 (2016), SUPPLEMENTAL SPECIFICATIONS DATED (01/18) AND SPECIAL PROVISIONS.

DESIGN SPECIFICATIONS: AASHTO LRFD BRIDGE DESIGN SPECIFICATIONS, 8TH EDITION, AS SUPPLEMENTED BY THE CONNECTICUT DEPARTMENT OF TRANSPORTATION BRIDGE DESIGN MANUAL (2003), WITH THE LATEST REVISIONS.

ALLOWABLE DESIGN STRESSES:

CONCRETE:
- CLASS "A" CONCRETE — BASED ON f'c = 3,000 psi
- CLASS "S" CONCRETE — BASED ON f'c = 3,000 psi
- CLASS "F" CONCRETE — BASED ON f'c = 4,000 psi

REINFORCEMENT:
- ASTM A615 GRADE 60 — BASED ON fy = 60,000 psi

STRUCTURAL STEEL:
- AASHTO M270 GRADE 50 — BASED ON Fy = 50,000 psi

THE SPECIFIED CONCRETE STRENGTH USED IN DESIGN, f'c, OF THE CONCRETE COMPONENTS IS NOTED ABOVE. THE MINIMUM COMPRESSIVE STRENGTH OF THE CONCRETE IN THE CONSTRUCTED COMPONENTS SHALL CONFORM TO THE REQUIREMENTS OF "SECTION 6.01 CONCRETE FOR STRUCTURES."

LIVE LOAD: HL-93.

FUTURE PAVING ALLOWANCE: NONE.

STRUCTURAL STEEL: SEE STRUCTURAL STEEL NOTES FOR DESIGNATIONS AND REQUIREMENTS.

PAINT: PAINT SHALL CONFORM TO THE REQUIREMENTS OF THE SPECIAL PROVISION, "STRUCTURAL STEEL (SITE NO. 1)". THE COLOR OF THE TOPCOAT MATERIAL ON THE STRUCTURAL STEEL SHALL CONFORM TO FEDERAL STANDARD 595, COLOR NO. 26329, BLUE GRAY.

BITUMINOUS CONCRETE OVERLAY: THIS SHALL CONSIST OF TWO LIFTS. THE FIRST SHALL BE "HMA S0.25" (1" THICK) AND THE SECOND SHALL BE "HMA S0.375" (2" THICK).

DIMENSIONS: WHEN DECIMAL DIMENSIONS ARE GIVEN TO LESS THAN THREE DECIMAL PLACES, THE OMITTED DIGITS SHALL BE ASSUMED TO BE ZEROS.

EXISTING DIMENSIONS: DIMENSIONS OF THE EXISTING STRUCTURE SHOWN ON THESE PLANS ARE FOR GENERAL REFERENCE ONLY. THEY HAVE BEEN TAKEN FROM THE ORIGINAL DESIGN DRAWINGS AND ARE NOT GUARANTEED. THE CONTRACTOR SHALL TAKE ALL FIELD MEASUREMENTS NECESSARY TO ASSURE PROPER FIT OF FINISHED WORK AND SHALL ASSUME FULL RESPONSIBILITY FOR THEIR ACCURACY. WHEN SHOP DRAWINGS BASED ON FIELD MEASUREMENTS ARE SUBMITTED FOR APPROVAL, THE FIELD MEASUREMENTS SHALL ALSO BE SUBMITTED FOR REFERENCE BY THE REVIEWER.

UTILITIES: THE CONTRACTOR SHALL PROTECT AND MAINTAIN ALL EXISTING UTILITIES WITHIN THE PROJECT LIMITS, UNLESS NOTED OTHERWISE. IF ANY UTILITY IS DAMAGED OR SERVICE IS INTERRUPTED DURING CONSTRUCTION, THE CONTRACTOR SHALL BE RESPONSIBLE FOR RESTORING FULL SERVICE IN A SAFE MANNER APPROVED BY THE UTILITY COMPANY AND ENGINEER.

CONCRETE NOTES:

REMAIN-IN-PLACE FORMS: THE USE OF REMAIN-IN-PLACE FORMS SHALL BE ALLOWED FOR INTERIOR BAYS ONLY. THE GIRDERS HAVE BEEN DESIGNED FOR THE ADDITIONAL WEIGHT OF 5 POUNDS PER SQUARE FOOT FOR THE REMAIN-IN-PLACE FORMS BETWEEN GIRDERS. DEAD LOAD FOR REMAIN-IN-PLACE FORMS ASSUMES THAT FORM CORRUGATIONS ARE FILLED WITH STYRO FOAM.

COMPOSITE CONSTRUCTION: NO TEMPORARY INTERMEDIATE SUPPORTS SHALL BE USED DURING THE PLACING AND SETTING OF THE CONCRETE DECK SLAB. TEMPORARY SUPPORTS MAY BE USED FOR STRUCTURAL STEEL ERECTION ONLY. CONSTRUCTION LOADS AND DEAD LOADS WILL BE PERMITTED WHEN DIRECTED BY THE ENGINEER BUT ONLY WHEN THE CONCRETE HAS REACHED A STRENGTH OF f'c = 3,500 PSI. LIVE LOADS (TRAFFIC) WILL BE PERMITTED ON THE STRUCTURE AFTER THE CONCRETE HAS REACHED A STRENGTH OF f'c = 4,000 PSI.

CLASS "A" CONCRETE: CLASS "A" CONCRETE SHALL BE USED FOR ALL SUBSTRUCTURE MODIFICATIONS.

CLASS "F" CONCRETE: CLASS "F" CONCRETE SHALL BE USED FOR THE BRIDGE DECK INCLUDING SIDEWALKS, PARAPETS, AND APPROACH SLABS.

CLASS "S" CONCRETE: CLASS "S" CONCRETE SHALL BE USED FOR SUBSTRUCTURE REPAIRS AND PATCHING.

JOINT SEAL: SEE SPECIAL PROVISIONS.

EXPOSED EDGES: EXPOSED EDGES OF CONCRETE SHALL BE BEVELED 1" x 1" UNLESS DIMENSIONED OTHERWISE.

CONCRETE COVER: ALL REINFORCEMENT SHALL HAVE TWO INCHES COVER UNLESS DIMENSIONED OTHERWISE.

REINFORCEMENT: ALL REINFORCEMENT SHALL BE ASTM A615 GRADE 60.

EPOXY COATED REINFORCING BARS: ALL REINFORCEMENT IN THE SUPERSTRUCTURE, INCLUDING THE CONCRETE DECK SLAB, SIDEWALKS, PARAPETS, AND THE APPROACH SLABS, SHALL BE EPOXY COATED UNLESS OTHERWISE NOTED. THESE BARS SHALL BE INCLUDED IN THE PAY ITEM "DEFORMED STEEL BARS (EPOXY COATED)".

FELT: THE COST OF FURNISHING AND PLACING 15-POUND ROOFING FELT IS INCLUDED IN THE ITEM FOR "CLASS "A" CONCRETE".

PREFORMED EXPANSION JOINT FILLER: THE COST OF FURNISHING AND INSTALLING PREFORMED EXPANSION JOINT FILLER SHALL BE INCLUDED IN THE COST OF ITEM "1/2" INCH PREFORMED EXPANSION JOINT FILLER FOR BRIDGES".

CLOSED CELL ELASTOMER: THE COST OF FURNISHING AND INSTALLING CLOSED CELL ELASTOMER SHALL BE INCLUDED IN THE COST OF ITEM "CLASS "A" CONCRETE".

CONSTRUCTION JOINTS: CONSTRUCTION JOINTS, OTHER THAN THOSE SHOWN ON THE PLANS, WILL NOT BE PERMITTED WITHOUT PRIOR APPROVAL OF THE ENGINEER.

BRIDGE IDENTIFICATION PLACARDS: THE CONTRACTOR SHALL PROVIDE AND INSTALL NEW BRIDGE IDENTIFICATION SIGNS AT THE LEADING END OF EACH BRIDGE PARAPET ON THE TRAFFIC SIDE. THE SIGNS SHALL BE FABRICATED WITH 40 GAUGE ALUMINUM SHEET METAL. THE SIGNS SHALL BE 4"x12" WITH 3" WHITE REFLECTIVE BLOCK LETTERS ON GREEN REFLECTIVE SHEETING. EACH SIGN SHALL READ: 00061. THEY SHOULD BE MOUNTED TO THE FRONT FACE OF THE PARAPETS WITH THE SIGN AND LEGEND READING HORIZONTALLY. ALL COSTS ASSOCIATED WITH PROVIDING AND INSTALLING THE BRIDGE SIGNS SHALL BE COVERED UNDER ITEM 1208928 SIGN FACE SHEET ALUMINUM (TYPE III REFLECTIVE SHEETING). THE FINAL LOCATION AND ATTACHMENT METHOD FOR THE SIGNS SHALL BE APPROVED BY THE ENGINEER PRIOR TO INSTALLATION.

1 PENETRATING SEALER PROTECTIVE COMPOUND: PENETRATING SEALER PROTECTIVE COMPOUND SHALL BE APPLIED TO ALL CONCRETE SURFACES, EXISTING AND PROPOSED, THAT ARE PERMANENTLY EXPOSED IN THE FINISHED WORK. SURFACES TO BE TREATED INCLUDE, BUT ARE NOT NECESSARILY LIMITED TO, THE ABUTMENTS, WINGWALLS, PIER, UNDERSIDE OF DECK AT CLOSURE POURS AND OVERHANGS, AND SIDEWALKS AND PARAPETS ON THE BRIDGE AND APPROACH SLABS. SEE SPECIAL PROVISIONS.

TABLE OF QUANTITIES

ITEM DESCRIPTION	UNIT	QUANTITY
LEAD COMPLIANCE FOR MISCELLANEOUS EXTERIOR TASKS	LS	LS
STRUCTURE EXCAVATION - EARTH (COMPLETE)	CY	270
PERVIOUS STRUCTURE BACKFILL	CY	500
HMA S0.375	TON	80
HMA S0.25	TON	40
MODIFY EXISTING BRIDGE SIDEWALK	EA	1
REMOVAL OF SUPERSTRUCTURE (SITE NO. 1)	LS	LS
GROUND ANCHOR	EA	14
PERFORMANCE TEST FOR GROUND ANCHOR	EA	4
PROOF TEST FOR GROUND ANCHOR	EA	10
SHEAR CONNECTORS	EA	3,900
WELDED STUDS	EA	18
ASPHALTIC PLUG EXPANSION JOINT SYSTEM	CF	35
PREFORMED JOINT SEAL	LF	40
STEEL-LAMINATED ELASTOMERIC BEARINGS	CI	8,568
CLASS "A" CONCRETE	CY	200
CLASS "S" CONCRETE	CY	2
CLASS "F" CONCRETE	CY	400
1/2" PREFORMED EXPANSION JOINT FILLER FOR BRIDGES	SF	80
DEFORMED STEEL BARS	LB	20,000
DEFORMED STEEL BARS - EPOXY COATED	LB	96,000
DOWEL BAR SPLICER SYSTEM	EA	140
DOWEL BAR SPLICER SYSTEM - EPOXY COATED	EA	2,300
DRILLING AND GROUTING REINFORCING BARS	LF	860
STRUCTURAL STEEL (SITE NO. 1)	LS	LS
TEMPORARY SUPPORT ASSEMBLY	EA	18
REPAIR DAMAGED BEAMS	LS	LS
MEMBRANE WATERPROOFING (COLD LIQUID ELASTOMERIC)	SY	770
DAMPPROOFING	SY	160
TEMPORARY EARTH RETAINING SYSTEM	SF	688
PENETRATING SEALER PROTECTIVE COMPOUND	SY	1,400
TEMPORARY PRECAST CONCRETE BARRIER CURB	LF	170
TEMPORARY PRECAST CONCRETE BARRIER CURB (STRUCTURE)	LF	850
TEMPORARY PRECAST CONCRETE BARRIER CURB (STRUCTURE) (15"x32")	LF	340
TEMPORARY PROTECTIVE FENCE (BRIDGE)	LF	680
PROTECTIVE FENCE (7' HIGH) (CURVED)	LF	320
REMOVAL OF EXISTING MASONRY	CY	42
TYPE DE-7 DELINEATOR	EA	18
TYPE DE-7A DELINEATOR	EA	18
FIRE SUPPRESSION STANDPIPE SYSTEM	LS	LS
REMOVE WATER MAIN	LS	LS

DESIGNED BY:
AECOM
AECOM
500 ENTERPRISE DRIVE
ROCKY HILL, CT 06067

STATE OF CONNECTICUT — JOHN T. HAPKIEWICZ — 28070 — LICENSED PROFESSIONAL ENGINEER

John Hapkiewicz
2019.01.09
15:35:54 -
05'00'

ADDENDUM NO. 1

REV.	DATE	REVISION DESCRIPTION	SHEET NO.
-	-	-	-
-	-	-	-
-	-	-	-
-	-	-	-
-	-	-	-
1	12/21/18	ADDED PENETRATING SEALER NOTE	06.03.A1

THE INFORMATION, INCLUDING ESTIMATED QUANTITIES OF WORK, SHOWN ON THESE SHEETS IS BASED ON LIMITED INVESTIGATIONS BY THE STATE AND IS IN NO WAY WARRANTED TO INDICATE THE CONDITIONS OF ACTUAL QUANTITIES OF WORK WHICH WILL BE REQUIRED.

Plotted: 1/9/2019

DESIGNER/DRAFTER: M. DALICKAS
CHECKED BY: J. IVES

STATE OF CONNECTICUT
DEPARTMENT OF TRANSPORTATION

Filename: ...\SB_MSH_Br00061_0102_0363_GNT01-A1.dgn

SIGNATURE/BLOCK:
AECOM
500 ENTERPRISE DRIVE
ROCKY HILL, CT 06067

PROJECT TITLE:
REHABILITATION OF BRIDGE 00061
STRAWBERRY HILL AVENUE
OVER I-95

TOWN: **NORWALK**

DRAWING TITLE: **GENERAL NOTES & QUANTITIES**

PROJECT NO. **102-363**
DRAWING NO. **S-02**
SHEET NO. **06.03.A1**

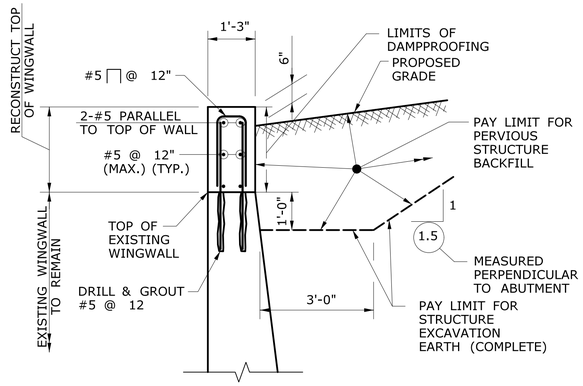

SECTION X S-24 X S-25

SCALE: 1/2" = 1'-0"

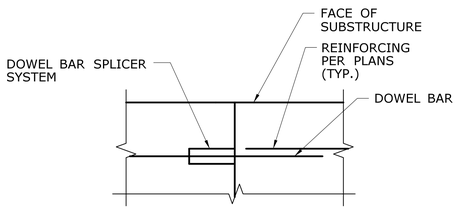

CONSTRUCTION JOINT DETAIL

N.T.S.

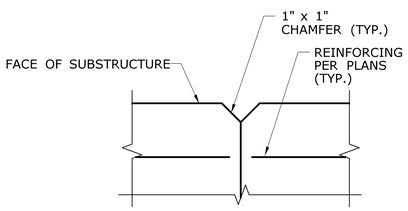

CONTRACTION JOINT DETAIL

N.T.S.

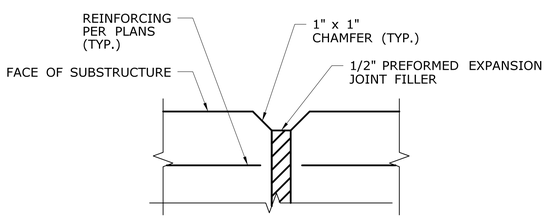

EXPANSION JOINT DETAIL

N.T.S.

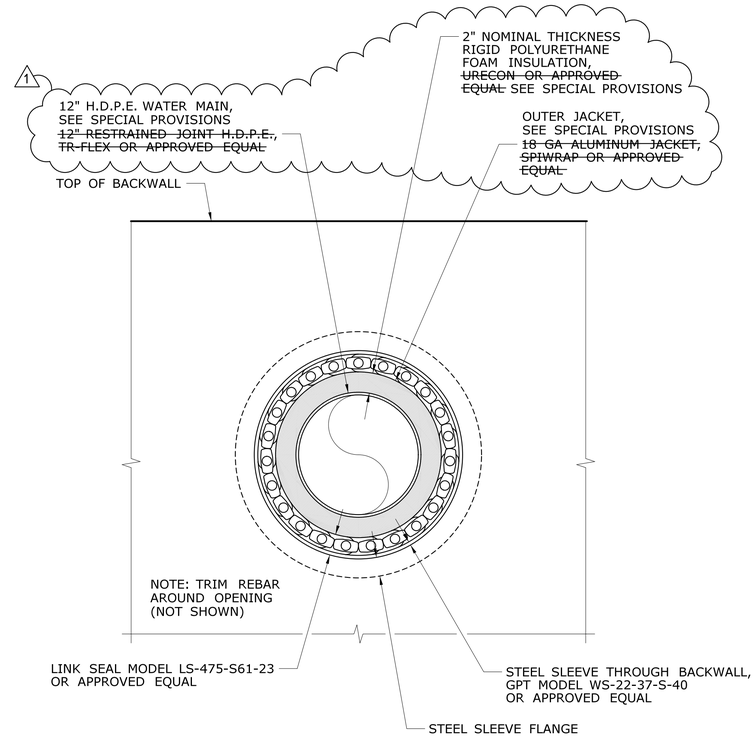

WATER MAIN PENETRATION DETAIL H S-24 H S-25

SCALE: 3/4" = 1'-0"

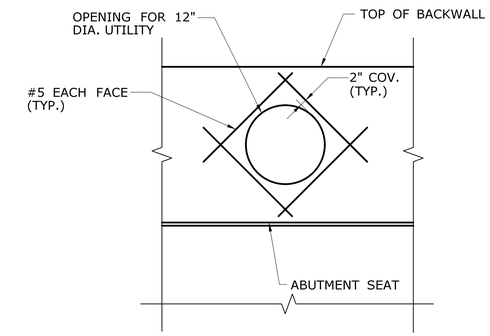

WATER MAIN OPENING REINFORCEMENT DETAIL

SCALE: 1/2" = 1'-0"

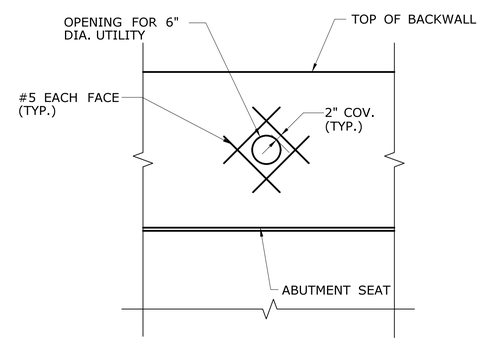

GAS MAIN OPENING REINFORCEMENT DETAIL

SCALE: 1/2" = 1'-0"

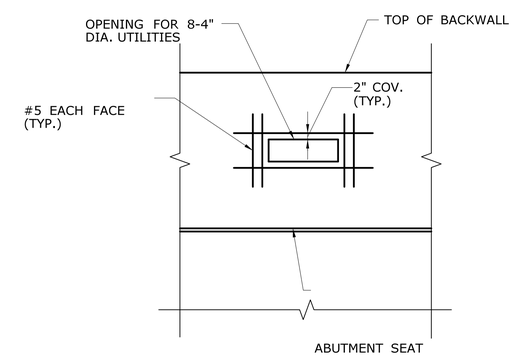

ELECTRICAL DUCTS OPENING REINFORCEMENT DETAIL

SCALE: 1/2" = 1'-0"

ADDENDUM NO. 1

REV.	DATE	REVISION DESCRIPTION	SHEET NO.
-	-	-	-
-	-	-	-
-	-	-	-
-	-	-	-
-	-	-	-
1	12/21/18	CLARIFY WATER MAIN CALLOUTS	06.28.A1

THE INFORMATION, INCLUDING ESTIMATED QUANTITIES OF WORK, SHOWN ON THESE SHEETS IS BASED ON LIMITED INVESTIGATIONS BY THE STATE AND IS IN NO WAY WARRANTED TO INDICATE THE CONDITIONS OF ACTUAL QUANTITIES OF WORK WHICH WILL BE REQUIRED.

Plotted: 1/9/2019

DESIGNER/DRAFTER: M. DALICKAS

CHECKED BY: J. IVES

SCALE AS NOTED

STATE OF CONNECTICUT
DEPARTMENT OF TRANSPORTATION

Filename: ...\SB_MSH_Br00061_0102_0363_ABTD2-A1.dgn

SIGNATURE/BLOCK:

AECOM
500 ENTERPRISE DRIVE
ROCKY HILL, CT 06067

PROJECT TITLE:
REHABILITATION OF BRIDGE 00061 STRAWBERRY HILL AVENUE OVER I-95

TOWN: **NORWALK**

DRAWING TITLE: **ABUTMENT DETAILS 2 OF 2**

PROJECT NO. 102-363

DRAWING NO. S-27

SHEET NO. 06.28.A1

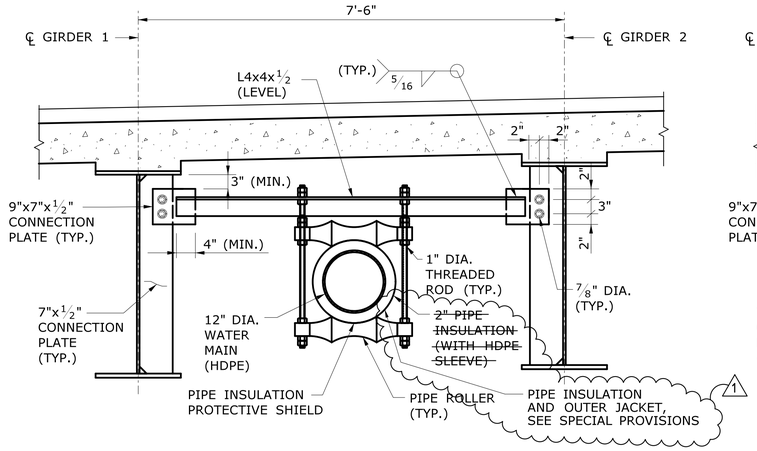

UTILITY HANGER U1

SCALE: 3/4" = 1'-0"

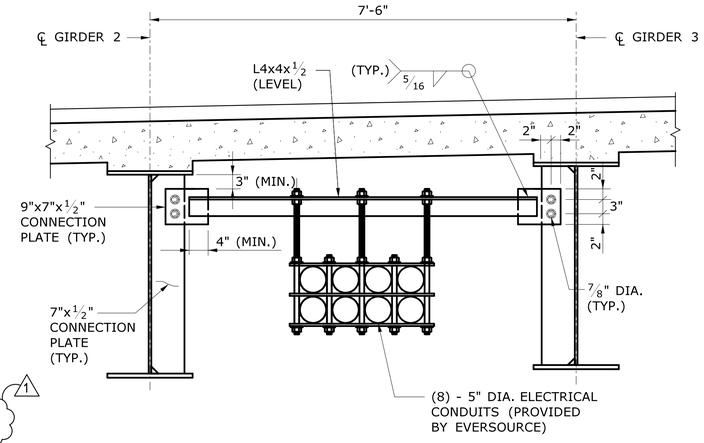

UTILITY HANGER U2

SCALE: 3/4" = 1'-0"

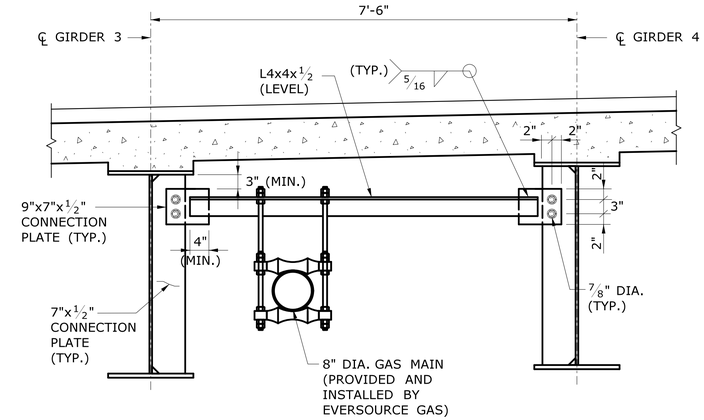

UTILITY HANGER U3

SCALE: 3/4" = 1'-0"

WATER MAIN UTILITY HANGER NOTES

1. L4x4x1/2 UTILITY HANGER TO BE INSTALLED BY CONTRACTOR.
2. RODS, ROLLERS, HARDWARE AND INSULATED PIPE TO BE PROVIDED AND INSTALLED BY CONTRACTOR.
3. FIELD DRILLING OF HOLES FOR THREADED RODS SHALL NOT BE PERMITTED.
4. CONTRACTOR TO PROVIDE CUT SHEETS FOR RODS, ROLLERS, HARDWARE AND INSULATED PIPE PRIOR TO FABRICATING UTILITY HANGER STEEL.

   CONTACT:
   DOMINICK DiGANGI
   FIRST DISTRICT WATER DEPARTMENT
   12 NEW CANAAN AVENUE
   NORWALK, CT 06851
   PHONE: (203) 847-7387 EXT:28
   EMAIL: DDIGANGI@FIRSTDISTRICTWATER.ORG

5. CONTRACTOR TO NOTIFY THE FIRST DISTRICT WATER DEPARTMENT ONE WEEK PRIOR TO INSTALLATION TO COORDINATE INSPECTION.

ELECTRIC UTILITY HANGER NOTES

1. L4x4x1/2 UTILITY HANGER TO BE INSTALLED BY CONTRACTOR.
2. RODS, FRP ASSEMBLIES, HARDWARE AND FIBERGLASS PIPES TO BE PROVIDED BY EVERSOURCE ELECTRIC AND INSTALLED BY CONTRACTOR.
3. FIELD DRILLING OF HOLES FOR THREADED RODS SHALL NOT BE PERMITTED. CONTRACTOR TO COORDINATE LOCATION OF DRILLED HOLES FOR THREADED RODS WITH EVERSOURCE ELECTRIC.

   CONTACT:
   MICHAEL PARILLO
   EVERSOURCE
   626 GLENBROOK ROAD
   STAMFORD, CT 06906
   PHONE: (203) 352-5431
   MICHAEL.PARILLO@EVERSOURCE.COM

4. CONTRACTOR TO PROVIDE DOCUMENTATION OF COORDINATION WITH EVERSOURCE ELECTRIC PRIOR TO FABRICATING UTILITY DIAPHRAGM STEEL.
5. CONTRACTOR TO NOTIFY EVERSOURCE ELECTRIC ONE WEEK PRIOR TO INSTALLATION TO COORDINATE INSPECTION.

GAS UTILITY HANGER NOTES

1. L4x4x1/2 UTILITY HANGER TO BE INSTALLED BY CONTRACTOR.
2. RODS, ROLLERS, HARDWARE AND STEEL PIPE TO BE PROVIDED AND INSTALLED BY EVERSOURCE GAS.
3. FIELD DRILLING OF HOLES FOR THREADED RODS SHALL NOT BE PERMITTED. CONTRACTOR TO COORDINATE LOCATION OF DRILLED HOLES FOR THREADED RODS WITH EVERSOURCE GAS.

   CONTACT:
   LEANNA COIRO
   EVERSOURCE GAS
   56 COOPER STREET
   MERIDEN, CT 06451
   PHONE: (203) 596-3120
   LEANNA.COIRO@EVERSOURCE.COM

4. CONTRACTOR TO PROVIDE DOCUMENTATION OF COORDINATION WITH EVERSOURCE GAS PRIOR TO FABRICATING UTILITY HANGER STEEL.

ADDENDUM NO. 1

REV.	DATE	REVISION DESCRIPTION	SHEET NO.
-	-	-	-
-	-	-	-
-	-	-	-
-	-	-	-
-	-	-	-
1	12/21/18	REVISE PIPE INSULATION & JACKET	06.35.A1

THE INFORMATION, INCLUDING ESTIMATED QUANTITIES OF WORK, SHOWN ON THESE SHEETS IS BASED ON LIMITED INVESTIGATIONS BY THE STATE AND IS IN NO WAY WARRANTED TO INDICATE THE CONDITIONS OF ACTUAL QUANTITIES OF WORK WHICH WILL BE REQUIRED.

Plotted: 1/9/2019

DESIGNER/DRAFTER: A. HAWKSLEY
CHECKED BY: J. IVES
SCALE AS NOTED

STATE OF CONNECTICUT
DEPARTMENT OF TRANSPORTATION

Filename: ..\SB_MSH_Br00061_0102_0363_DIA2-A1.dgn

SIGNATURE/BLOCK:
AECOM
500 ENTERPRISE DRIVE
ROCKY HILL, CT 06067

PROJECT TITLE:
REHABILITATION OF BRIDGE 00061 STRAWBERRY HILL AVENUE OVER I-95

TOWN: **NORWALK**

DRAWING TITLE: **UTILITY SUPPORT DETAILS**

PROJECT NO. **102-363**
DRAWING NO. **S-34**
SHEET NO. **06.35.A1**