06 - MECHANICAL
INDEX OF DRAWINGS

DRAWING NUMBER	DRAWING TITLE	DRAWING NUMBER	DRAWING TITLE
M-01	MECHANICAL INDEX OF DRAWINGS		
M-02	GENERAL PLAN, ELEVATION AND NOTES		
M-03	LOCK MACHINERY REPAIRS		
M-04	BALANCE BASCULE LEAVES		
M-05	OPERATING MACHINERY REPAIRS I		
M-06	OPERATING MACHINERY REPAIRS II		
M-07	LIVE LOAD SHOE ADJUSTMENT		

DESIGNED BY:
HARDESTY & HANOVER, LLC
NEW HAVEN, CT

STATE OF CONNECTICUT · MATTHEW V GAGLIANO · No. 30781 · LICENSED PROFESSIONAL ENGINEER

Digitally signed by Matthew V Gagliano
Date: 2018.09.26 09:52:22-04'00'

REV.	DATE	REVISION DESCRIPTION	SHEET NO.
-	-	-	-
-	-	-	-
-	-	-	-
-	-	-	-
-	-	-	-
-	-	-	-

THE INFORMATION, INCLUDING ESTIMATED QUANTITIES OF WORK, SHOWN ON THESE SHEETS IS BASED ON LIMITED INVESTIGATIONS BY THE STATE AND IS IN NO WAY WARRANTED TO INDICATE THE CONDITIONS OF ACTUAL QUANTITIES OF WORK WHICH WILL BE REQUIRED.

Plotted Date: 9/25/2018

DESIGNER/DRAFTER: **M.V.G.**
CHECKED BY: **S.A.M.**

STATE OF CONNECTICUT
DEPARTMENT OF TRANSPORTATION

Filename: ...\SB_MST_Br2295_173-462_INX_Mech.dgn

SIGNATURE/ BLOCK:
Hardesty & Hanover
59 ELM STREET, SUITE 406
NEW HAVEN, CT 06510
(203) 772-2857

PROJECT TITLE:
REHABILITATION OF BRIDGE NO. 02295, ROUTE 136 OVER NORWALK RIVER

TOWN: **NORWALK**

DRAWING TITLE: **MECHANICAL INDEX OF DRAWINGS**

PROJECT NO. **173-462**
DRAWING NO. **M-01**
SHEET NO. **06.01**

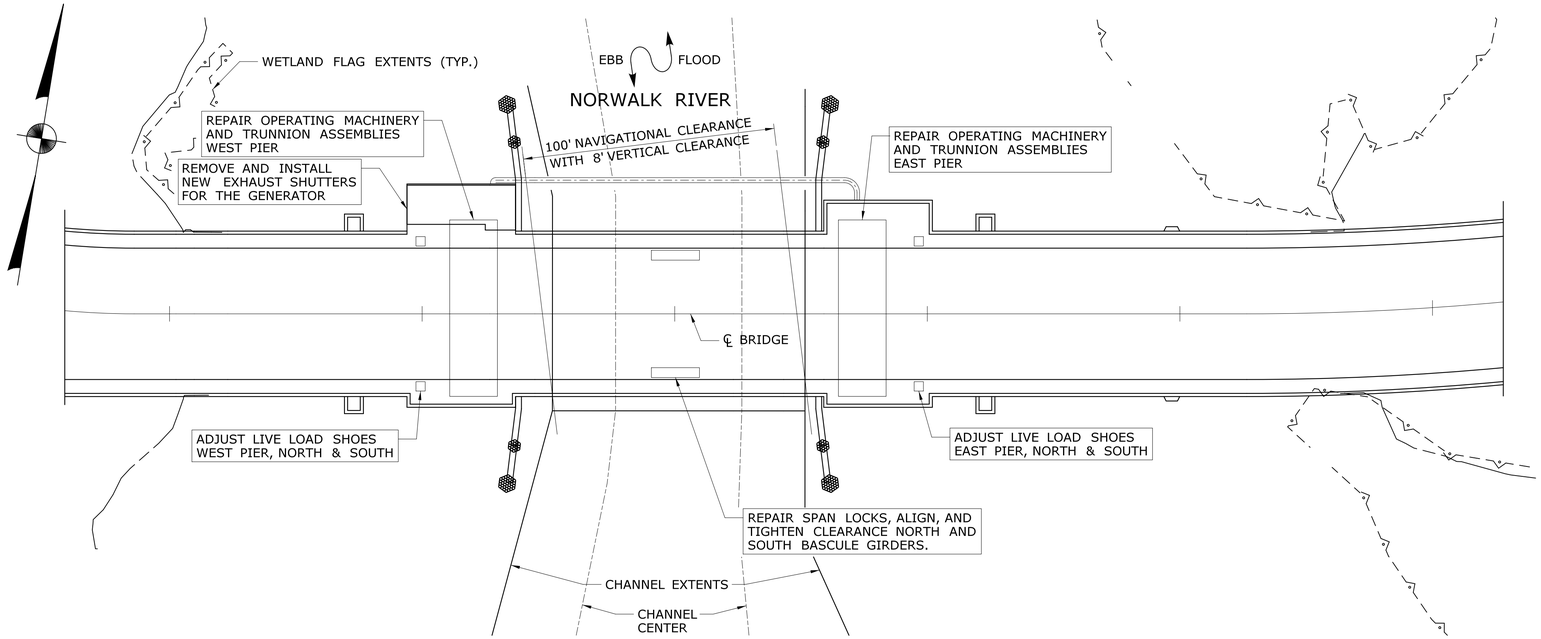

PLAN

SCALE: 1" = 30'

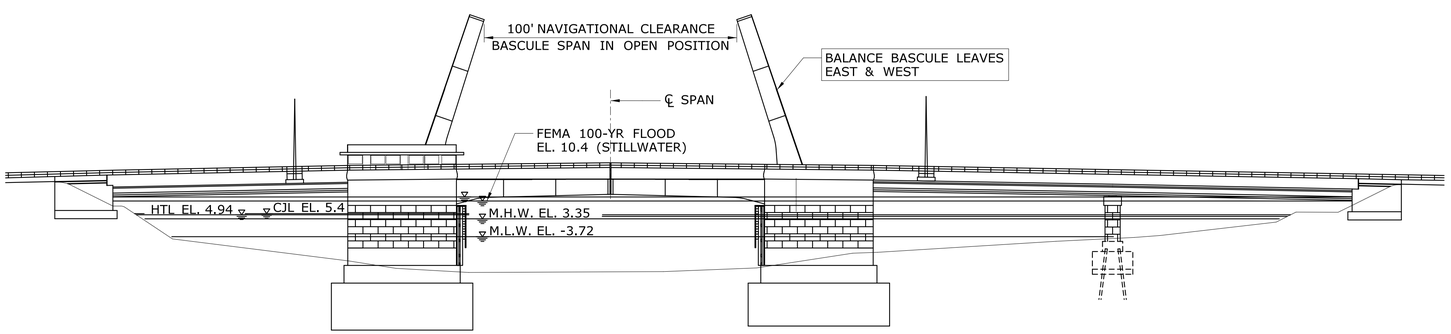

ELEVATION

SCALE: 1" = 30'

MECHANICAL PAY ITEMS:

0100250A LOCK MACHINERY
0603614A BALANCE BASCULE LEAVES
0603631A OPERATING MACHINERY
0603651A LIVE LOAD SHOE ADJUSTMENT

GENERAL MACHINERY NOTES:

1. ALL MACHINERY EQUIPMENT TO BE FABRICATED AND INSTALLED IN ACCORDANCE WITH CONNDOT FORM 817 2016, SUPPLEMENTAL SPECIFICATION DATED (01/18), SPECIAL PROVISIONS, AND AASHTO MOVABLE HIGHWAY BRIDGE DESIGN SPECIFICATIONS RELEVANT TO ORIGINAL DESIGN.

2. WHERE REFERENCED HEREIN AND IN SPECIAL PROVISIONS, "DEPARTMENT" REFERS TO THE CONNECTICUT DEPARTMENT OF TRANSPORTATION OR THEIR REPRESENTATIVES.

3. THE DESIGN INTENT IS FOR THE CONTRACTOR TO USE ACCEPTED INDUSTRY METHODS TO ACHIEVE PROPER OPERATION OF A REPEATABLE OPERATING SYSTEM, INCLUDING COORDINATING ALL MECHANICAL, ELECTRICAL AND STRUCTURAL INTERFACE POINTS. ALL RIGGING, SCAFFOLDING, MEASUREMENTS, ALIGNMENT AND INSTALLATION TOOLS REQUIRED FOR THE JOB ARE CONSIDERED PART OF THE WORK.

4. THE CONTRACTOR SHALL BE RESPONSIBLE FOR COMPILING ALL CERTIFICATIONS AND TEST DATA, WHICH SHALL VERIFY AND DOCUMENT THAT ALL MACHINERY MEETS THE CONTRACT REQUIREMENTS. MATERIAL CERTIFICATIONS AND TEST REPORTS SHALL BE SUBMITTED TO THE ENGINEER FOR APPROVAL PRIOR TO SHIPMENT.

5. THE CONTRACTOR SHALL FIELD VERIFY ALL INTERFACING DIMENSIONS WITH EXISTING SURFACES FOR PROPER COORDINATION PRIOR TO SUBMITTING SHOP DRAWINGS. DIMENSIONS SHOWN ON PLANS ARE DIMENSIONS AFTER ALL REQUIRED FABRICATION AND ASSEMBLY OPERATIONS.

6. THE CONTRACTOR SHALL SUBMIT SHOP, CATALOG CUTS, AND ASSEMBLY DRAWINGS BASED ON THE CONTRACT DRAWINGS AND SPECIFICATIONS TO THE DEPARTMENT.

7. THE CONTRACT SHALL PROCURE REPLACEMENT PARTS PRIOR TO FIELD WORK.

8. MODEL NUMBERS AND DETAILS OF STANDARD COMPONENTS ARE BASED ON MANUFACTURERS' CATALOG DATA CURRENT AT THE TIME THE PLANS WERE PREPARED. EQUIVALENT MODELS FROM OTHER MANUFACTURERS MAY BE SUBSTITUTED AT THE OPTION OF THE CONTRACTOR AND WITH THE APPROVAL OF THE ENGINEER. ALL RELATED STRUCTURAL, ELECTRICAL AND MECHANICAL DETAILS SHALL BE REVISED BY THE CONTRACTOR TO SUIT THE CERTIFIED DIMENSIONS OF THE COMPONENTS ACTUALLY FURNISHED.

9. ALL REQUIRED MACHINING, RIGGING, ASSEMBLY, SPECIAL SHIMMING (INCLUDING FEATHERING OR TAPERED SHIMS), PAINTING, LUBRICATING AND TESTING SHALL BE CONSIDERED PART OF THE WORK.

10. RESTRICT ROADWAY TRAFFIC DURING THE WORK WHEN SPAN LOCKS ARE RETRACTED. COORDINATE SPAN OPERATION FOR CHANNEL NAVIGATION WITH THE WORK.

11. SUPPORT COMPONENTS PRIOR TO DISASSEMBLY.

12. SUBMIT FIELD WORK PROCEDURES TO THE DEPARTMENT. NOTIFY THE DEPARTMENT TEN DAYS PRIOR TO THE SITE VERIFICATION, FINAL ALIGNMENT MEASUREMENTS, AND TESTING.

13. ALL DIMENSIONS FOR MACHINE FINISHED SURFACES SHALL BE HELD TO +/- 0.010", EXCEPT AS OTHERWISE REQUIRED BY THE PLANS.

14. UNLESS OTHERWISE INDICATED FITS AND FINISHES FOR MACHINERY SHALL BE AS FOLLOWS:

SURFACE	FIT	FINISH
MACHINERY BASE ON STEEL		-250
MACHINERY PARTS IN FIXED CONTACT		-125
SHAFT JOURNAL	RC6	-16
JOURNAL BUSHINGS	RC6	-32
SPLIT BUSHING IN BASE OR CAP	LC1	-125
SOLID BUSHING IN BASE (OVER 1/4 " WALL)	FN2	-63
TURNED BOLTS	LC6	-63
HUBS ON SHAFTS	FN2	-63
TEETH OF OPEN SPUR GEARS		-63

THE ABOVE FITS FOR CYLINDRICAL PARTS SHALL ALSO APPLY TO THE MAJOR DIMENSIONS OF NON-CYLINDRICAL PARTS

15. SPARE PARTS ARE TO BE DELIVERED TO THE DEPARTMENT. HARDWARE ITEMS, SUCH AS FASTENERS AND FITTINGS TO BE STORED IN THE TENDER HOUSE. LARGE ITEMS WEIGHING MORE THAN 25 LBS. TO BE DELIVERED TO THE DEPARTMENT'S BRIDGE MAINTENANCE FACILITY, 48 BANNER DRIVE, MILFORD, CT.

NAVIGATION AND ROADWAY RESTRICTIONS:

CONTRACTOR IS RESPONSIBLE TO COORDINATE ALL NAVIGATION AND ROADWAY DISRUPTIONS WITH THE USCG, MARINERS, AND THE DEPARTMENT. THE NAVIGATION CHANNEL SHALL REMAIN AT LEAST PARTIALLY OPEN (SINGLE LEAF SHUTDOWN) FOR THE DURATION OF THE CONTRACT, EXCEPT FOR TWO SEPARATE 32-HOUR PERIODS FOR LOCK MACHINERY WORK AND LIVE LOAD SHOE ADJUSTMENT. FULL CHANNEL CLOSURE CANNOT TAKE PLACE PRIOR TO OCTOBER 1, 2019 (SEE SPECIAL PROVISIONS).

PERIODIC, SINGLE OR PARTIAL LANE CLOSURES MAY BE SCHEDULED DURING THE WORK. THE CONTRACTOR SHALL BE RESPONSIBLE TO PROVIDE ADEQUATE SIGNAGE AND BARRIERS AS NECESSARY TO PERFORM THIS WORK.

SIDEWALK CLOSURE PERMITTED ON ONE SIDE OF BRIDGE FOR WORK PER TEMPORARY MAINTENANCE AND PROTECTION OF TRAFFIC PLAN. NO COMPLETE PEDESTRIAN CLOSURE PERMITTED EXCEPT DURING NIGHTTIME WORK (SEE SPECIAL PROVISIONS).

COMPLETE ROADWAY CLOSURE TO PERFORM LOCK MACHINERY WORK AND REAR LIVE LOAD SHOE ADJUSTMENT PERMITTED MONDAY TO WEDNESDAY NIGHTTIME ONLY. ROADWAY CLOSURE TO BE COORDINATED WITH THE DEPARTMENT. OPENING OF THE SPAN TO PERFORM WORK OR TEST THE EQUIPMENT IS LIMITED TO A MAXIMUM DURATION OF 10 MINUTES.

NO SPAN OPERATIONS PERMITTED DURING THE POSTED NAVIGATION RESTRICTION DAILY HOURS UNLESS PERMITTED BY THE DEPARTMENT.

REV.	DATE	REVISION DESCRIPTION	SHEET NO.
-	-	-	-
-	-	-	-
-	-	-	-
-	-	-	-
-	-	-	-
-	-	-	-

THE INFORMATION, INCLUDING ESTIMATED QUANTITIES OF WORK, SHOWN ON THESE SHEETS IS BASED ON LIMITED INVESTIGATIONS BY THE STATE AND IS IN NO WAY WARRANTED TO INDICATE THE CONDITIONS OF ACTUAL QUANTITIES OF WORK WHICH WILL BE REQUIRED.

Plotted Date: 9/25/2018

DESIGNER/DRAFTER: **M.V.G.**
CHECKED BY: **S.A.M.**
SCALE: 1" = 30'

STATE OF CONNECTICUT
DEPARTMENT OF TRANSPORTATION

Filename: ...\SB_MST_Br2295_173-462_MEC_Gen_Plan_Elev_and_Notes.dgn

SIGNATURE/ BLOCK:
Hardesty & Hanover
59 ELM STREET, SUITE 406
NEW HAVEN, CT 06510
(203) 772-2857

PROJECT TITLE:
REHABILITATION OF BRIDGE NO. 02295, ROUTE 136 OVER NORWALK RIVER

TOWN: **NORWALK**

DRAWING TITLE: **GENERAL PLAN, ELEVATION AND NOTES**

PROJECT NO. **173-462**
DRAWING NO. **M-02**
SHEET NO. **06.02**

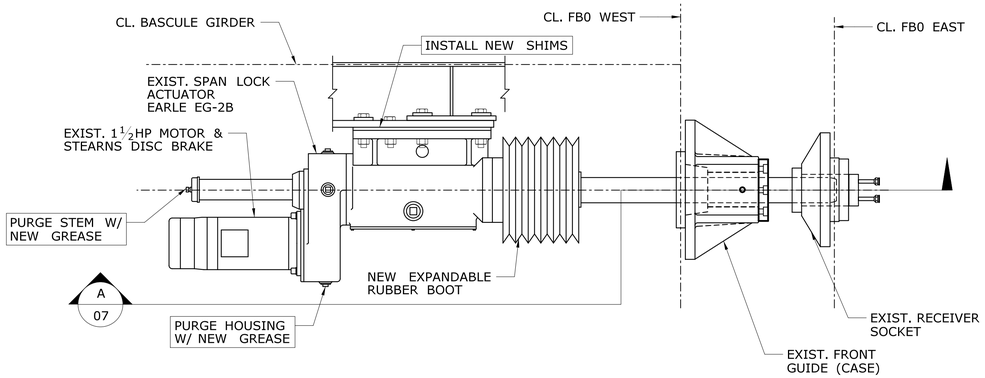

PLAN

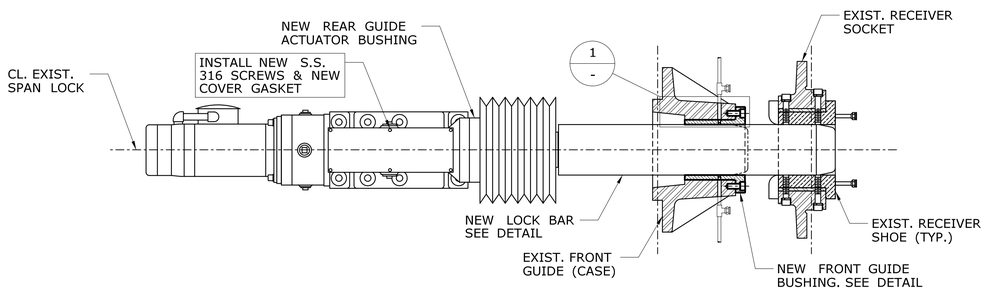

SECTION A / -

SPAN LOCK ASSEMBLY

SCALE: 1" = 1'-0"

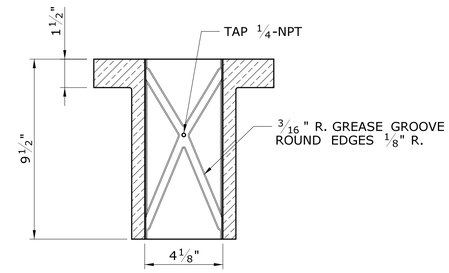

SECTION AT CENTER

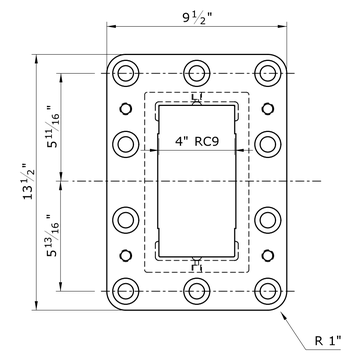

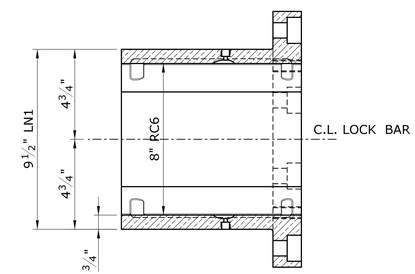

SECTION AT CENTER

NEW FRONT GUIDE BUSHING - DETAIL

SCALE: 3" = 1'-0"

BRONZE ASTM B22 C86300, 220-240 BHN
(2) REQUIRED

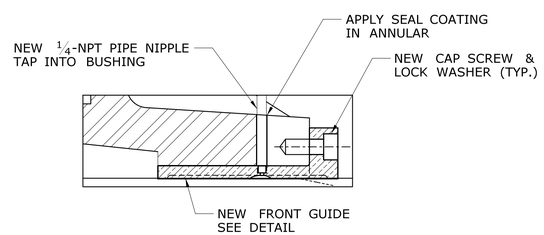

1 / 07 DETAIL

SCALE: 3" = 1'-0"

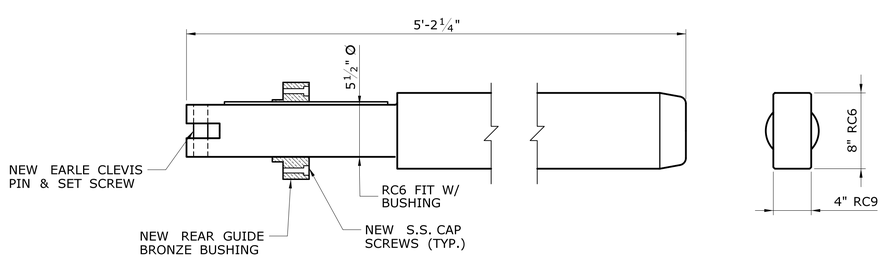

NEW LOCK BAR & BUSHING - DETAIL

SCALE: ½" = 1'-0"
FORGED ALLOY STEEL ASTM A668 CL. M
CASE HARDENED, SEE NOTES
(2) REQUIRED

LOCK MACHINERY NOTES

1. REFER TO SPECIAL PROVISION "LOCK MACHINERY". WORK TO BE PAID UNDER THIS ITEM.
2. CLEAN AND SPOT PAINT ALL EXISTING SPAN LOCK COMPONENTS INCLUDING GUIDE AND RECEIVER CASTINGS.
3. PROVIDE NEW SPAN LOCK FRONT AND REAR GUIDE BUSHINGS. FIRST PERFORM LIVE LOAD BEARING REPAIRS AND ADJUST SHIMS UNDER RECEIVER SHOES FOR AN RC8 CLEARANCE FIT WITH LOCK BAR. FRONT GUIDE TO BAR FIT IS RC6.
4. INSTALL NEW IN-KIND PROTECTIVE BELLOWS EQUIPPED WITH A ZIPPER FACING DOWN.
5. PURGE ALL OLD GREASE FROM ACTUATOR REDUCER HOUSING AND LOCK BAR STEM UNTIL NEW GREASE FLOWS OUT.
6. REMOVE U-SHAPED SHIMS AT SPAN ACTUATORS AND INSTALL NEW 1-PIECE SHIMS. INSTALL NEW GASKET AND SCREWS FOR HATCH COVER.
7. DIMENSIONS OF NEW FRONT BUSHING, LOCK BAR AND REAR BUSHING TO MATCH AS-BUILT SHOP DRAWINGS BY STEWARD MACHINE., INC., NUMBER 9671-2 REVISION 5, 9/16/09 AND FOR LOCK BAR 9671-3 LATEST REVISION EXCEPT FOR DIMENSION SPECIFIED HEREIN. REAR BUSHING IS FOR AN EARLE EG-2B ACTUATOR.
8. SPECIFIED BUSHING HARDNESS IS BASED ON THE 3,000 KG STANDARD BRINELL SCALE.
9. MEASURE TOP AND BOTTOM RECEIVER SHOES' CLEARANCE WITHOUT TRAFFIC ON THE SPAN. ADJUST SHIMS UNDER SHOES SUCH THAT THERE IS CLEARANCE TOP AND BOTTOM WITH LOCK FULL DRIVEN.

REV.	DATE	REVISION DESCRIPTION	SHEET NO.
-	-	-	-
-	-	-	-
-	-	-	-
-	-	-	-
-	-	-	-
-	-	-	-

THE INFORMATION, INCLUDING ESTIMATED QUANTITIES OF WORK, SHOWN ON THESE SHEETS IS BASED ON LIMITED INVESTIGATIONS BY THE STATE AND IS IN NO WAY WARRANTED TO INDICATE THE CONDITIONS OF ACTUAL QUANTITIES OF WORK WHICH WILL BE REQUIRED.

Plotted Date: 9/25/2018

DESIGNER/DRAFTER: M.V.G.
CHECKED BY: S.A.M.
SCALE -

STATE OF CONNECTICUT
DEPARTMENT OF TRANSPORTATION

Filename: ...\SB_MST_Br2295_173-462_MEC_LL_Brg_and_Span_Lock_Repairs.dgn

SIGNATURE/BLOCK:
Hardesty & Hanover
59 ELM STREET, SUITE 406
NEW HAVEN, CT 06510
(203) 772-2857

PROJECT TITLE:
REHABILITATION OF BRIDGE NO. 02295, ROUTE 136 OVER NORWALK RIVER

TOWN: **NORWALK**

DRAWING TITLE: **LOCK MACHINERY REPAIRS**

PROJECT NO. **173-462**
DRAWING NO. **M-03**
SHEET NO. **06.03**

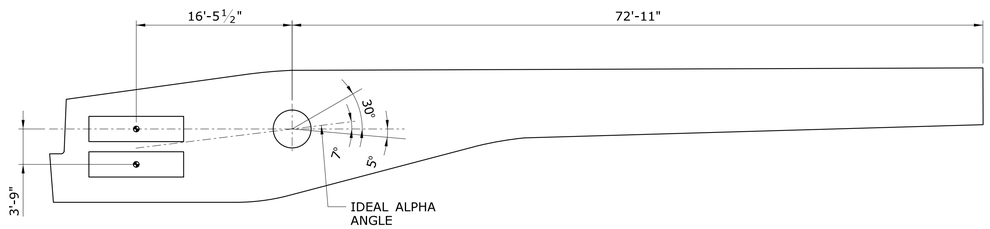

BASCULE LEAF - ELEVATION

EAST AND WEST LEAF
SCALE: 1/8" = 1'-0"

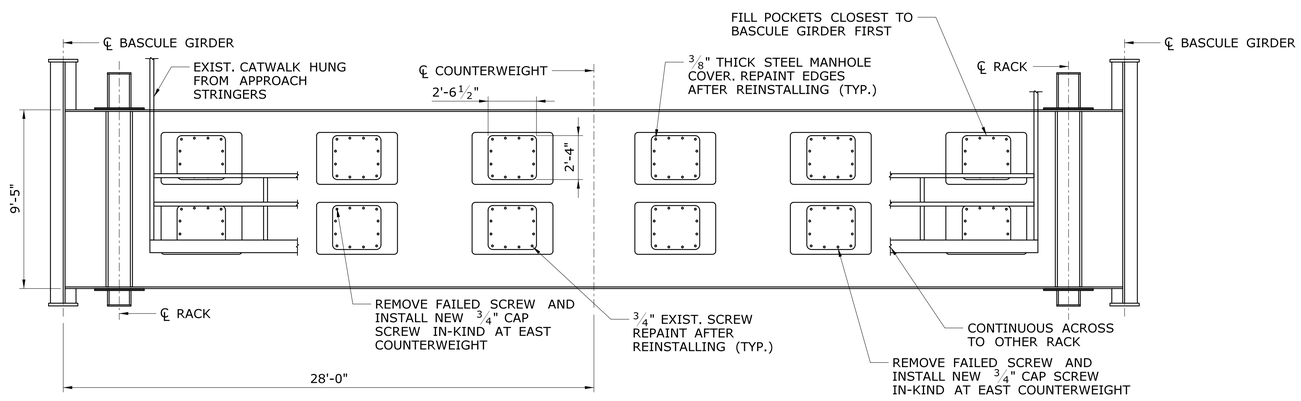

COUNTERWEIGHT - ELEVATION

EAST AND WEST LEAF
SCALE: 1/4" = 1'-0"

BALANCE BASCULE LEAVES NOTES

1. REFER TO SPECIAL PROVISION "BALANCE BASCULE LEAVES". WORK TO BE PAID UNDER THIS ITEM.
2. STRAIN GAGE TEST THE SPAN PRIOR TO START OF WORK TO DOCUMENT BASCULE BALANCE. STRAIN GAGE TEST AGAIN AFTER ALL STRUCTURAL REPAIRS.
3. RECORD ADDED/REMOVED WEIGHT AND ITS LOCATION DURING STRUCTURAL REPAIRS. ADJUST COUNTERWEIGHTS TO MAINTAIN SPAN BALANCE DURING AND AFTER COMPLETING ALL STRUCTURAL REPAIRS. RECORD ALL ADJUSTMENTS IN THE BALANCE SUMMARY TABLE AND SUBMIT ON REQUEST BY THE DEPARTMENT.
4. AN IMBALANCE CHANGE OF MORE THAN 200 KIP-FT MUST BE CORRECTED WITH COUNTERWEIGHT PRIOR TO OPERATION OF BASCULE LEAVES THROUGHOUT THE DURATION OF THE PROJECT.
5. THE LEAVES SHALL ALWAYS BE SPAN HEAVY TO AVOID RISK OF ACCIDENTAL OPENING OF LEAVES.
6. STRAIN GAGE BOTH OUTPUT SHAFTS OF EACH LEAF TO QUANTIFY THE DIFFERENTIAL GEAR LOAD SHARING.
7. THE FINAL IMBALANCE MAGNITUDE WITH EACH LEAF IN THE SEATED POSITION TO BE BETWEEN 70 AND 150 KIP-FEET TOE-HEAVY AND THE CENTER OF GRAVITY ALPHA ANGLE BETWEEN PLUS 30 DEGREES TO NEGATIVE 5 DEGREES FROM HORIZONTAL CENTER LINE OF ROTATION.
8. EXISTING CATWALK, INCLUDING RAILINGS AND GRATING ARE CONSIDERED FREE OF DAMAGE SUCH AS DEFORMATION AND/OR SCATCHES. PRIOR TO STARTING WORK CONTRACTOR SHALL DOCUMENT AND SUBMIT ANY NOTED DAMAGE, OTHERWISE CONTRACTOR IS RESPONSIBLE TO REPAIR ANY DAMAGE THAT RESULTS FROM THE WORK AT NO ADDITIONAL COST TO THE DEPARTMENT.
9. DO NOT STORE COUNTERWEIGHT BLOCKS ON CATWALK.
10. REPAINT ALL EDGES OF MANHOLE COVERS EXHIBITING CHIPPED PAINT AND/OR CORROSION.
11. EACH BALANCE BLOCK IS APPROXIMATELY 80 LBS. AND 10" X 10" X 10". CONTRACTOR TO VERIFY WEIGHT AND DIMENSIONS AND SUBMIT WITH WORK PROCEDURE TO THE DEPARTMENT.

REV.	DATE	REVISION DESCRIPTION	SHEET NO.
-	-	-	-
-	-	-	-
-	-	-	-
-	-	-	-
-	-	-	-
-	-	-	-

THE INFORMATION, INCLUDING ESTIMATED QUANTITIES OF WORK, SHOWN ON THESE SHEETS IS BASED ON LIMITED INVESTIGATIONS BY THE STATE AND IS IN NO WAY WARRANTED TO INDICATE THE CONDITIONS OF ACTUAL QUANTITIES OF WORK WHICH WILL BE REQUIRED.

Plotted Date: 9/25/2018

DESIGNER/DRAFTER: M.V.G.
CHECKED BY: S.A.M.
SCALE AS NOTED

STATE OF CONNECTICUT
DEPARTMENT OF TRANSPORTATION

Filename: ..\SB_MST_Br2295_173-462_MEC_Layout_ and_Scope.dgn

SIGNATURE/BLOCK:
Hardesty & Hanover
59 ELM STREET, SUITE 406
NEW HAVEN, CT 06510
(203) 772-2857

PROJECT TITLE:
REHABILITATION OF BRIDGE NO. 02295, ROUTE 136 OVER NORWALK RIVER

TOWN: NORWALK

DRAWING TITLE: BALANCE BASCULE LEAVES

PROJECT NO. 173-462
DRAWING NO. M-04
SHEET NO. 06.04

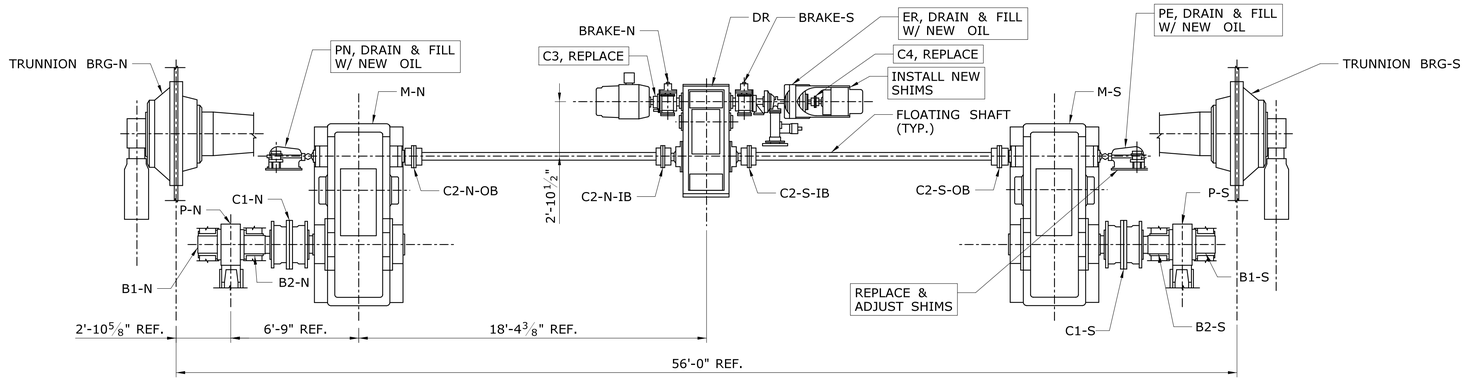

SPAN DRIVE MACHINERY - ELEVATION

WEST LEAF SHOWN, EAST LEAF OPPOSITE HAND

SCALE: ¼" = 1'-0"

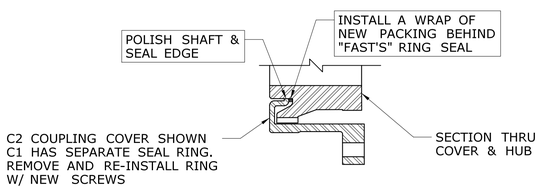

GEAR COUPLING - DETAIL

C1 (8) SEALS, C2 (8) SEALS

SCALE: 1½" = 1'-0"

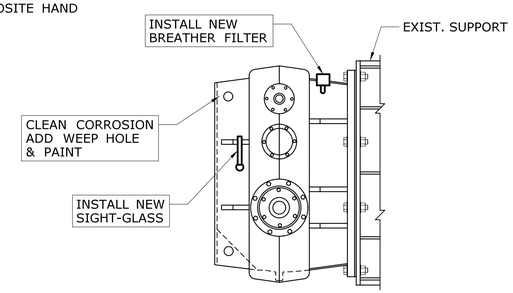

DIFFERENTIAL GEAR REDUCER - DETAIL

DR (2) LOCATIONS

SCALE: ½" = 1'-0"

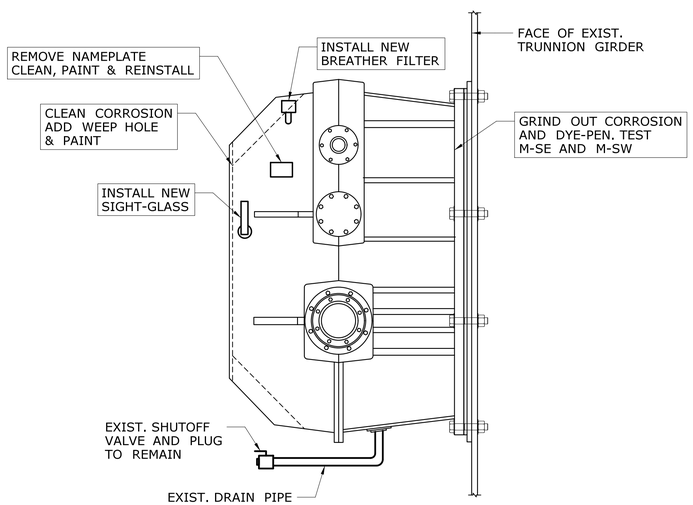

MAIN GEAR REDUCER - DETAIL

M (4) LOCATIONS

SCALE: ½" = 1'-0"

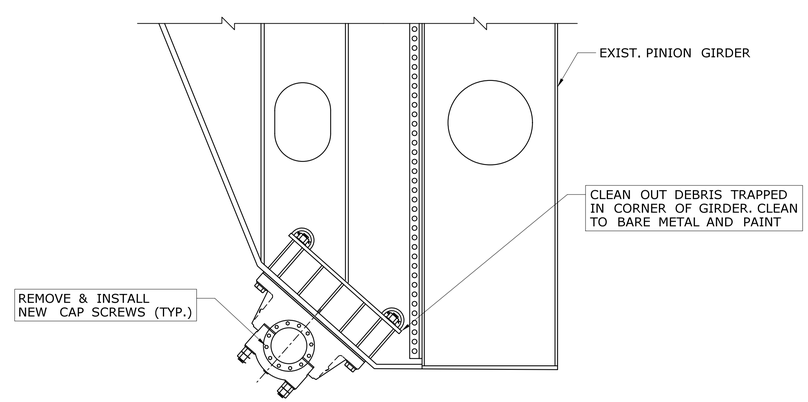

PINION BEARING - ELEVATION

B1 AND B2 (8) LOCATIONS

SCALE: ½" = 1'-0"

NOMENCLATURE

(REFERENCED FROM ORIGINAL MACHINERY SCHEDULES)

DR	DIFFERENTIAL GEAR REDUCER
M	MAIN GEAR REDUCER
BRG	BEARING
B#-X	BEARING ID NUMBER-LOCATION
C#-X	COUPLING ID NUMBER-LOCATION
P	PINION
N	NORTH
S	SOUTH
IB	INBOARD
OB	OUTBOARD
ER	EMERGENCY GEAR REDUCER
PN/PE	POSITION CONTROL GEAR REDUCER NORMAL DRIVE/EMERGENCY DRIVE

OPERATING MACHINERY NOTES I

1. REFER TO SPECIAL PROVISION "OPERATING MACHINERY". WORK TO BE PAID UNDER THIS ITEM.
2. CLEAN AND SPOT PAINT ALL MACHINERY.
3. DRAIN OLD OIL AND FILL WITH NEW OIL AND INSTALL NEW BREATHERS AT GEAR REDUCERS PN/PE, AND ER.
4. REMOVE AND INSTALL NEW SIGHT-GLASS ASSEMBLIES.
5. AT ALL DR AND M GEAR REDUCERS TIGHTEN ALL BEARING RETAINER COVER SCREWS. TIGHTEN STUFFING BOX GLANDS AT OUTPUT SHAFTS. NEW AIR FILTER BREATHERS.
6. POLISH CLEAN THE WEARING SURFACE OF ALL BRAKE WHEELS.
7. REPLACE AND ADJUST EAST AND WEST SPAN DRIVE AUXILIARY MOTOR SHIMS WITH NEW CAPTURED SHIMS.
8. REPLACE (3) CORRODED CAP SCREWS AT B1-S EAST LEAF THRUST FACE WITH NEW IN-KIND SCREWS AND PAINT. PROVIDE (12) MORE SPARE CAP SCREWS AND REPLACE AT OTHER B1 AND B2 BEARINGS AS DIRECTED BY THE DEPARTMENT.
9. CLEAN AND PAINT ALL B1 OUTBOARD BEARING REAR BASE BOLT NUTS AND STRUCTURAL STEEL BEARING SUPPORT.
10. REMOVE AND INSTALL NEW GREASE PIPING AND FITTINGS TO ALL B1 AND B2 BEARINGS.
11. REPLACE COUPLING C3 AND C4 WITH NEW SPECIFIED SIZE GRID COUPLINGS. PROVIDE ONE (1) SPARE FLEX GRID FOR EACH SIZE.
12. SUPPORT FLOATING SHAFTS BETWEEN C2 COUPLINGS. DISASSEMBLE FLEX COUPLING COVERS IN THE PRESENCE OF THE DEPARTMENT. REMOVE AND INSTALL NEW GAP DISCS BETWEEN ENDS OF SHAFTS. POLISH COVER "FAST'S" END RING SEALS AND FLANGE GASKET. INSTALL A WRAP OF SEAL PACKING ROPE BEHIND SEAL RING. REMOVE OLD GREASE AND APPLY NEW GREASE TO ALL INTERNAL SURFACES. REPLACE CORRODED BOLTS WITH NEW IN-KIND BOLTS. PROVIDE ONE COMPLETE SET OF NEW SPARE BOLTS FOR ONE C2 COUPLING.
13. DISASSEMBLE C1 COUPLING COVERS IN THE PRESENCE OF THE DEPARTMENT. POLISH FAST'S END RING SEALS. REMOVE OLD GREASE AND APPLY NEW GREASE TO ALL INTERNAL SURFACES. REPLACE CORRODED SCREWS WITH NEW IN-KIND SCREWS. PROVIDE TWO COMPLETE SETS OF NEW SPARE SCREWS FOR C1 COUPLING SEAL PLATES.
14. CHECK AND TIGHTEN ALL BOLTS AND SCREWS OF ALL COUPLINGS, BEARINGS, AND GEAR REDUCERS TO SPECIFIED TORQUE BY COMPONENT MANUFACTURER.
15. REPLACE AND ADJUST SHIMS UNDER THE NORTHEAST AND SOUTHEAST SPAN POSITION INDICATING REDUCER TO CORRECT MISALIGNMENT.

REV.	DATE	REVISION DESCRIPTION	SHEET NO.
-	-	-	-
-	-	-	-
-	-	-	-
-	-	-	-
-	-	-	-
-	-	-	-

THE INFORMATION, INCLUDING ESTIMATED QUANTITIES OF WORK, SHOWN ON THESE SHEETS IS BASED ON LIMITED INVESTIGATIONS BY THE STATE AND IS IN NO WAY WARRANTED TO INDICATE THE CONDITIONS OF ACTUAL QUANTITIES OF WORK WHICH WILL BE REQUIRED.

Plotted Date: 9/25/2018

DESIGNER/DRAFTER: **M.V.G.**

CHECKED BY: **S.A.M.**

SCALE AS NOTED

STATE OF CONNECTICUT
DEPARTMENT OF TRANSPORTATION

Filename: ...\SB_MST_Br2295_173-462_MEC_Layout_ and_Scope.dgn

SIGNATURE/BLOCK:

Hardesty & Hanover
59 ELM STREET, SUITE 406
NEW HAVEN, CT 06510
(203) 772-2857

PROJECT TITLE:

REHABILITATION OF BRIDGE NO. 02295, ROUTE 136 OVER NORWALK RIVER

TOWN: **NORWALK**

DRAWING TITLE: **OPERATING MACHINERY REPAIRS I**

PROJECT NO. **173-462**

DRAWING NO. **M-05**

SHEET NO. **06.05**

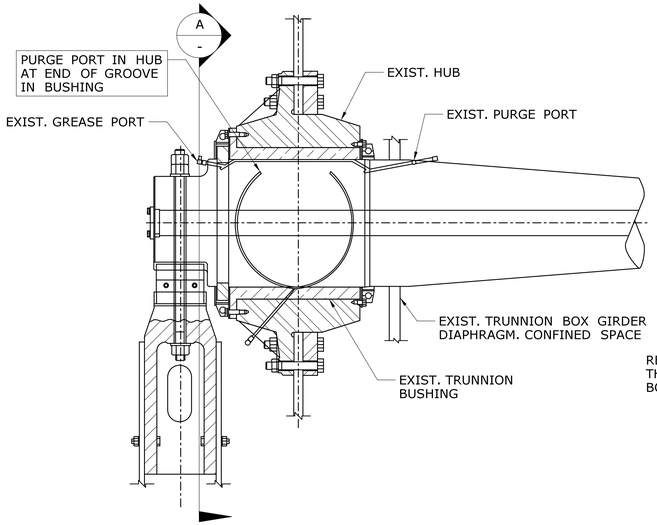

TRUNNION ASSEMBLY - SECTION THRU CENTER

EAST AND WEST LEAF, (4) LOCATIONS

SCALE: 3/4" = 1'-0"

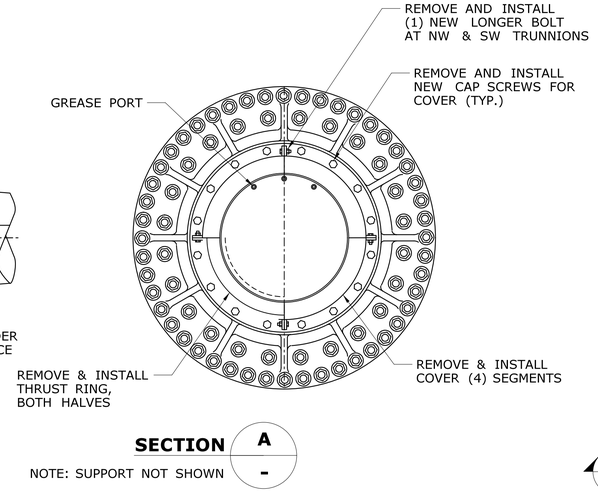

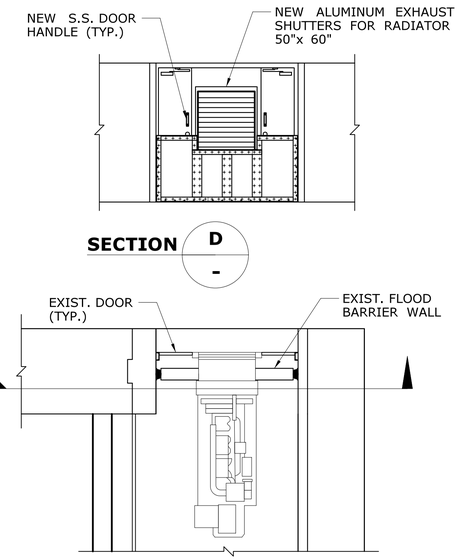

STANDBY GENERATOR - PLAN

EAST AND WEST LEAF

SCALE: 1/4" = 1'-0"

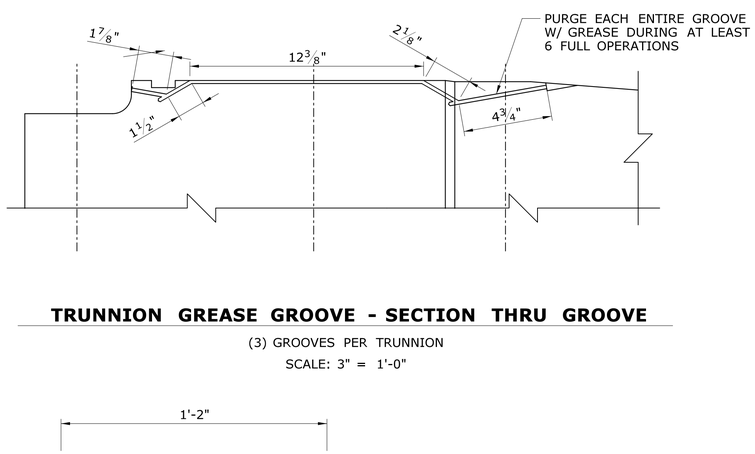

TRUNNION GREASE GROOVE - SECTION THRU GROOVE

(3) GROOVES PER TRUNNION

SCALE: 3" = 1'-0"

OPERATING MACHINERY NOTES II

1. REFER TO SPECIAL PROVISION "OPERATING MACHINERY". WORK TO BE PAID UNDER THIS ITEM.
2. CLEAN AND SPOT PAINT ALL TRUNNION ASSEMBLIES, TRUNNION SUPPORTS, INCLUDING PEDESTAL AND ANCHORS, AND GENERATOR FUEL TANK.
3. REMOVE WEST EXTERIOR WALL GENERATOR RADIATOR EXHAUST SHUTTERS AND INSTALL NEW IN-KIND SHUTTERS. INSTALL NEW DOOR HANDLES.
4. POWER STEAM CLEAN ENTIRE TRUNNION BEARING ASSEMBLY BETWEEN THE TRUNNION GIRDER AND BASCULE GIRDER.
5. CLEAN AND PAINT ALL B1 OUTBOARD BEARING REAR BASE BOLT NUTS AND STRUCTURAL STEEL BEARING SUPPORT.
6. REMOVE, FLUSH CLEAN AND RE-INSTALL GREASE PIPING AND FITTINGS FOR TRUNNION BEARINGS. FLUSH OUT TRUNNION BEARING GREASE GROOVES WITH OIL. PROVIDE (8) NEW GREASE FITTINGS AND PIPING IN-KIND.
7. REPLACE (1) TRUNNION THRUST COLLAR SPLIT COVER FASTENER WITH PROPER LENGTH BOLT AT NORTHWEST TRUNNION.
8. REMOVE THE COVER AND REMOVE THE TRUNNION THRUST RING. NOTIFY THE ENGINEER FOR INSPECTION. CLEAN ALL SURFACES AND POLISH OUT AREAS OF RUST INSTALL RING REUSING ITS TURNED BOLT THROUGH ITS SPLIT AND INSTALL NEW CAP SCREWS FOR COVER.

REV.	DATE	REVISION DESCRIPTION	SHEET NO.
-	-	-	-
-	-	-	-
-	-	-	-
-	-	-	-
-	-	-	-
-	-	-	-

THE INFORMATION, INCLUDING ESTIMATED QUANTITIES OF WORK, SHOWN ON THESE SHEETS IS BASED ON LIMITED INVESTIGATIONS BY THE STATE AND IS IN NO WAY WARRANTED TO INDICATE THE CONDITIONS OF ACTUAL QUANTITIES OF WORK WHICH WILL BE REQUIRED.

Plotted Date: 9/25/2018

DESIGNER/DRAFTER: M.V.G.

CHECKED BY: S.A.M.

SCALE AS NOTED

STATE OF CONNECTICUT
DEPARTMENT OF TRANSPORTATION

Filename: ...\SB_MST_Br2295_173-462_MEC_Layout_ and_Scope.dgn

SIGNATURE/BLOCK:

Hardesty & Hanover
59 ELM STREET, SUITE 406
NEW HAVEN, CT 06510
(203) 772-2857

PROJECT TITLE:

REHABILITATION OF BRIDGE NO. 02295, ROUTE 136 OVER NORWALK RIVER

TOWN: NORWALK

DRAWING TITLE: OPERATING MACHINERY REPAIRS II

PROJECT NO. 173-462

DRAWING NO. M-06

SHEET NO. 06.06

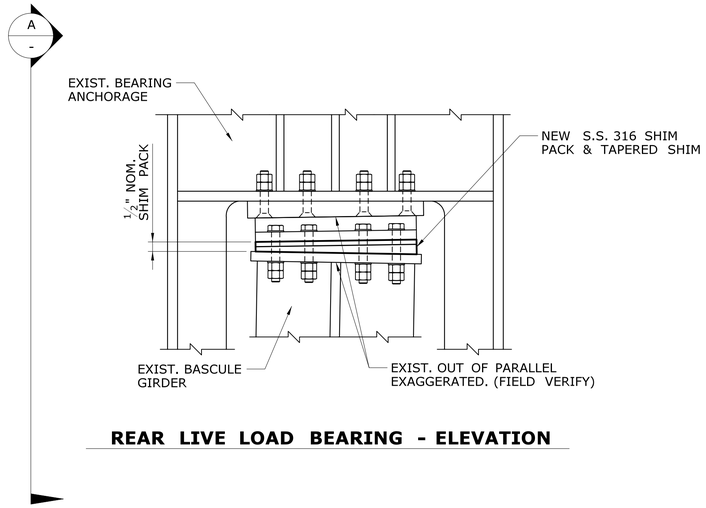

REAR LIVE LOAD BEARING - ELEVATION

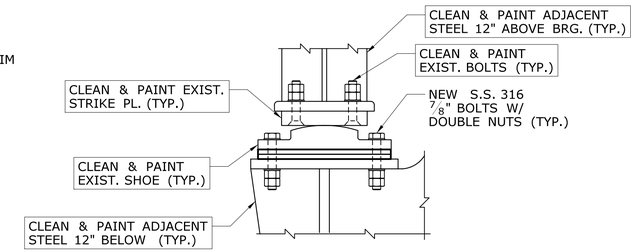

VIEW A -

LIVE LOAD SHOE ADJUSTMENT NOTES

1. REFER TO SPECIAL PROVISION "LIVE LOAD SHOE ADJUSTMENT". WORK TO BE PAID UNDER THIS ITEM.
2. CLEAN AND PAINT LIVE LOAD BEARINGS AND SURROUNDING STRUCTURAL STEEL IN ACCORDANCE WITH SPECIAL PROVISION "LOCALIZED PAINT REMOVAL AND FIELD PAINTING OF EXISTING STEEL".
3. REMOVE AND INSTALL NEW STAINLESS STEEL BOLTS AT LIVE LOAD SHOES. ADJUST THE SHIMS UNDER THE LIVE LOAD SHOES FOR CONTACT WITHOUT THE SPAN LOCKS DRIVEN.
4. MEASURE THE GAP BETWEEN EACH STRIKE PLATE AND SHOE USING 12" LONG FEELER GAGES. TAKE MEASUREMENTS AT EACH SIDE OF BEARING. DEVELOP PROCEDURE FOR MEASURING BEARING 'OUT-OF-PARALLEL', MACHINING TAPERED SHIM, AND INSTALLATION. SUBMIT PROCEDURE TO THE DEPARMENT FOR REVIEW.
5. TAPERED SHIM TO HAVE A MINIMUM THICKNESS OF 1/4" AND 1/4" OVERSIZED HOLES.

REV.	DATE	REVISION DESCRIPTION	SHEET NO.
-	-	-	-
-	-	-	-
-	-	-	-
-	-	-	-
-	-	-	-
-	-	-	-

THE INFORMATION, INCLUDING ESTIMATED QUANTITIES OF WORK, SHOWN ON THESE SHEETS IS BASED ON LIMITED INVESTIGATIONS BY THE STATE AND IS IN NO WAY WARRANTED TO INDICATE THE CONDITIONS OF ACTUAL QUANTITIES OF WORK WHICH WILL BE REQUIRED.

Plotted Date: 9/25/2018

DESIGNER/DRAFTER: **M.V.G.**
CHECKED BY: **S.A.M.**
SCALE -

STATE OF CONNECTICUT
DEPARTMENT OF TRANSPORTATION

Filename: ...\SB_MST_Br2295_173-462_MEC_LL_Brg_and_Span_Lock_Repairs.dgn

SIGNATURE/ BLOCK:
Hardesty & Hanover
59 ELM STREET, SUITE 406
NEW HAVEN, CT 06510
(203) 772-2857

PROJECT TITLE:
REHABILITATION OF BRIDGE NO. 02295, ROUTE 136 OVER NORWALK RIVER

TOWN: **NORWALK**

DRAWING TITLE: **LIVE LOAD BEARING REPAIRS**

PROJECT NO. **173-462**
DRAWING NO. **M-07**
SHEET NO. **06.07**