08 - UTILITY
INDEX OF DRAWINGS

DRAWING NUMBER	DRAWING TITLE	DRAWING NUMBER	DRAWING TITLE
UT-01	SUBSET COVER SHEET - INDEX OF DRAWINGS		
UT-02	UTILITIES REPAIR DETAILS		

DESIGNED BY:
CLOSE, JENSEN AND MILLER, PC

Close, Jensen and Miller, P.C.
1137 Silas Deane Highway
Wethersfield, CT 06109

Digitally signed by John Miller
Date: 2018.09.25 12:06:22-04'00'

REV.	DATE	REVISION DESCRIPTION	SHEET NO.

THE INFORMATION, INCLUDING ESTIMATED QUANTITIES OF WORK, SHOWN ON THESE SHEETS IS BASED ON LIMITED INVESTIGATIONS BY THE STATE AND IS IN NO WAY WARRANTED TO INDICATE THE CONDITIONS OF ACTUAL QUANTITIES OF WORK WHICH WILL BE REQUIRED.

Plotted Date: 9/25/2018

DESIGNER/DRAFTER: S.C./S.F.C.
CHECKED BY: J.H.M. II

STATE OF CONNECTICUT
DEPARTMENT OF TRANSPORTATION

Filename: ..\UT_MSH_173_462_BR02295_UT_01_INDEX_SHEET.dgn

SIGNATURE/BLOCK:
Close, Jensen and Miller, P.C.
1137 Silas Deane Highway
Wethersfield, CT 06109

PROJECT TITLE:
REHABILITATION OF BRIDGE NO. 02295, ROUTE 136 OVER NORWALK RIVER

TOWN: NORWALK

DRAWING TITLE: SUBSET COVER SHEET INDEX OF DRAWINGS

PROJECT NO. 173-462
DRAWING NO. UT-01
SHEET NO. 08.01

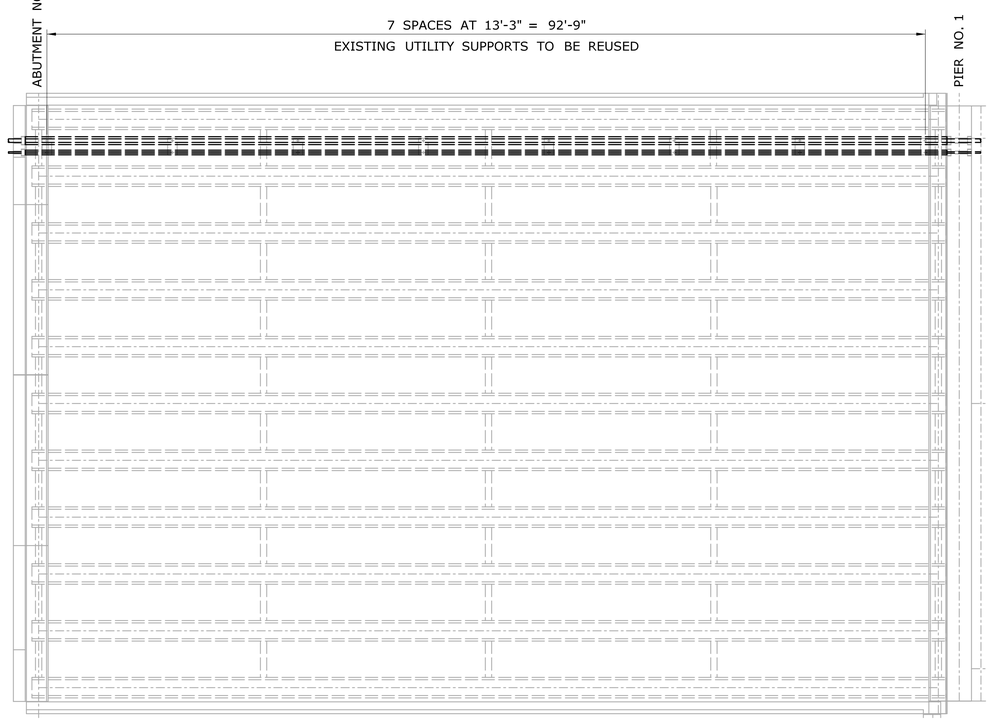

SPAN A-1 PLAN

SCALE: 1/8" = 1'-0"

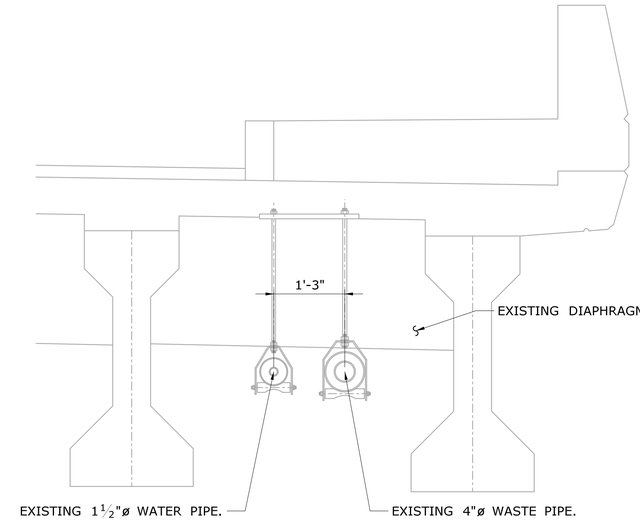

EXISTING

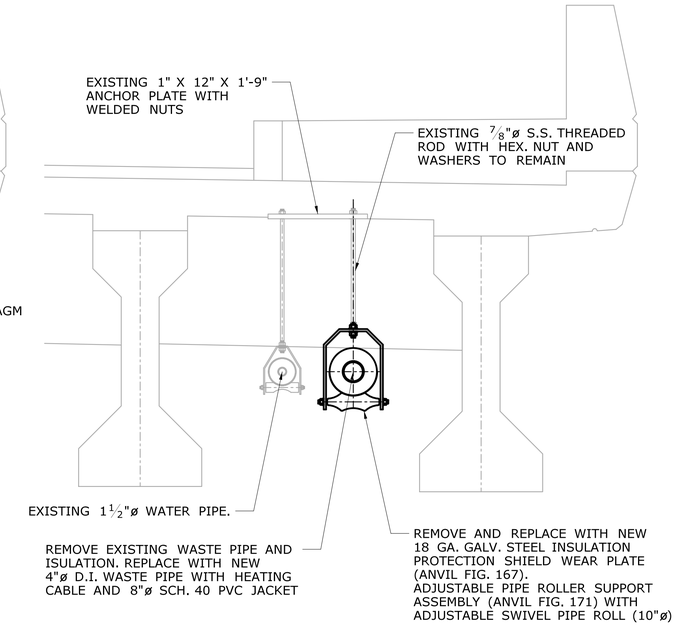

PROPOSED

TYPICAL SECTION

SCALE: 3/4" = 1'-0"

NOTE:

ALL WORK RELATED TO THE INSTALLATION OF THE PROPOSED 4" DIA. WASTE PIPE SHALL BE PAID UNDER ITEM "SANITARY SEWER RECONSTRUCTION" (SEE SPECIAL PROVISION).

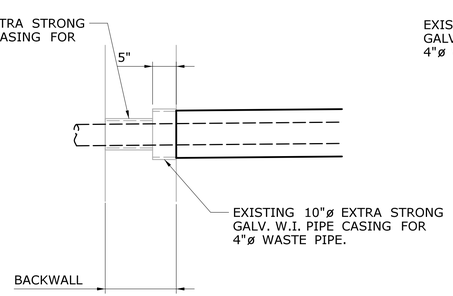

SECTION AT ABUTMENT NO. 1

SCALE: 3/4" = 1'-0"

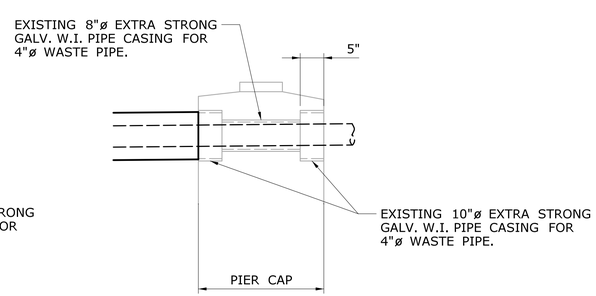

SECTION AT PIER NO. 1

SCALE: 3/4" = 1'-0"

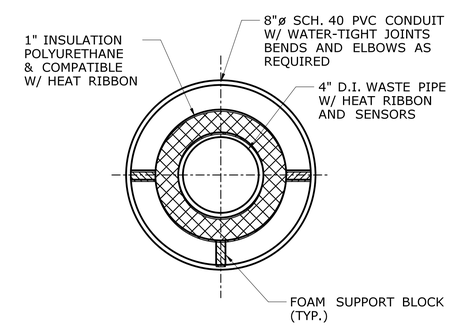

SANITARY LINE DETAILS

N.T.S.

REV.	DATE	REVISION DESCRIPTION	SHEET NO.

THE INFORMATION, INCLUDING ESTIMATED QUANTITIES OF WORK, SHOWN ON THESE SHEETS IS BASED ON LIMITED INVESTIGATIONS BY THE STATE AND IS IN NO WAY WARRANTED TO INDICATE THE CONDITIONS OF ACTUAL QUANTITIES OF WORK WHICH WILL BE REQUIRED.

Plotted Date: 9/25/2018

DESIGNER/DRAFTER: S.C./S.F.C.
CHECKED BY: J.H.M. II
SCALE AS NOTED

STATE OF CONNECTICUT
DEPARTMENT OF TRANSPORTATION

Filename: ...\UT_MSH_173_462_BR02295_UT_02_UTIL_SPAN-A-1.dgn

SIGNATURE/BLOCK:
Close, Jensen and Miller, P.C.
1137 Silas Deane Highway
Wethersfield, CT 06109

PROJECT TITLE:
REHABILITATION OF BRIDGE NO. 02295, ROUTE 136 OVER NORWALK RIVER

TOWN: NORWALK

DRAWING TITLE: UTILITIES REPAIR DETAILS

PROJECT NO. 173-462
DRAWING NO. UT-02
SHEET NO. 08.02