07 - ELECTRICAL
INDEX OF DRAWINGS

DRAWING NUMBER	DRAWING TITLE	DRAWING NUMBER	DRAWING TITLE
E-01	ELECTRICAL INDEX OF DRAWINGS		
E-02	GENERAL PLAN, ELEVATION AND NOTES		
E-03	MACHINERY ROOM ELECTRICAL WORK		
E-04	FULLY SEATED PROXIMITY SWITCH DETAILS		
E-05	WIRING DIAGRAMS		

DESIGNED BY:
HARDESTY & HANOVER, LLC
NEW HAVEN, CT

STATE OF CONNECTICUT · MATTHEW V GAGLIANO · No. 30781 · LICENSED PROFESSIONAL ENGINEER

Matthew V Gagliano
2018.09.25
14:05:41 -04'00'

REV.	DATE	REVISION DESCRIPTION	SHEET NO.
-	-	-	-
-	-	-	-
-	-	-	-
-	-	-	-
-	-	-	-
-	-	-	-

THE INFORMATION, INCLUDING ESTIMATED QUANTITIES OF WORK, SHOWN ON THESE SHEETS IS BASED ON LIMITED INVESTIGATIONS BY THE STATE AND IS IN NO WAY WARRANTED TO INDICATE THE CONDITIONS OF ACTUAL QUANTITIES OF WORK WHICH WILL BE REQUIRED.

Plotted Date: 9/25/2018

DESIGNER/DRAFTER: **M.V.G.**
CHECKED BY: **A.H.N.**

STATE OF CONNECTICUT
DEPARTMENT OF TRANSPORTATION

Filename: ...\SB_MST_Br2295_173-462_INX_Elec.dgn

SIGNATURE/ BLOCK:

Hardesty & Hanover
59 ELM STREET, SUITE 406
NEW HAVEN, CT 06510
(203) 772-2857

PROJECT TITLE:
REHABILITATION OF BRIDGE NO. 02295, ROUTE 136 OVER NORWALK RIVER

TOWN: **NORWALK**

DRAWING TITLE: **ELECTRICAL INDEX OF DRAWINGS**

PROJECT NO. **173-462**
DRAWING NO. **E-01**
SHEET NO. **07.01**

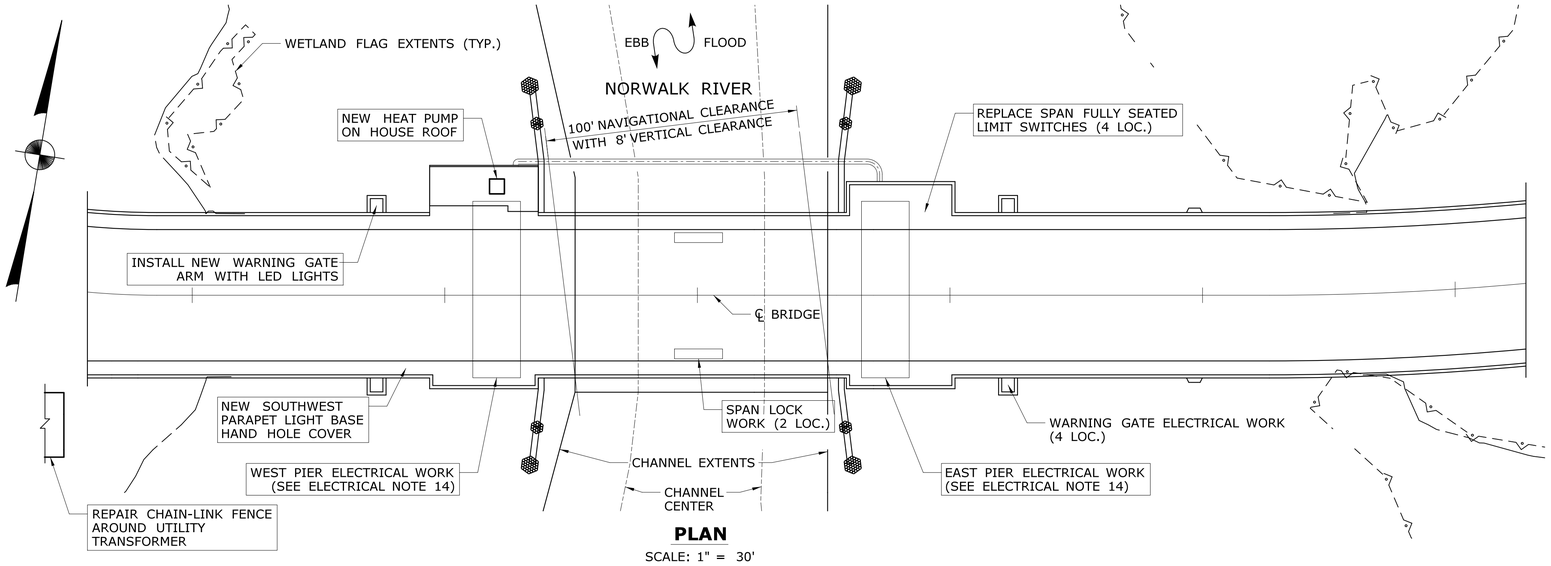

PLAN

SCALE: 1" = 30'

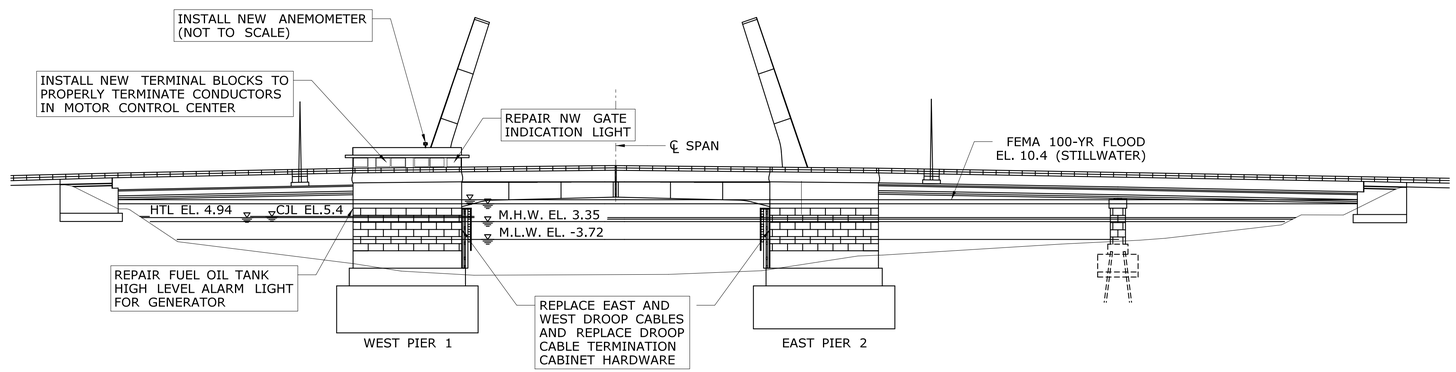

ELEVATION

SCALE: 1" = 30'

GENERAL ELECTRICAL NOTES:

1. ALL ELECTRICAL WORK SHALL BE IN ACCORDANCE WITH CONNECTICUT DEPARMENT OF TRANSPORTATION STANDARD SPECIFICATIONS, THE NATIONAL ELECTRICAL CODE (NEC 2014), AND THE ELECTRICAL REQUIREMENTS OF THE AMERICAN ASSOCIATION OF STATE HIGHWAY AND TRANSPORTATION OFFICIALS (AASHTO) STANDARD SPECIFICATIONS.
2. ALL ELECTRICAL WORK SHALL BE COORDINATED WITH THE WORK OF OTHER TRADES AND SHALL BE SCHEDULED CONSISTENT WITH THE OVERALL CONSTRUCTION STAGING SEQUENCE. THE BRIDGE SHALL REMAIN OPERATIONAL AT ALL TIMES EXCEPT DURING SCHEDULED SHUT DOWN PERIODS. ELECTRICAL REMOVAL WORK SHALL BE PERFORMED AND COORDINATED WITH THE INSTALLATION OF THE ELECTRICAL WORK.
3. THE PLANS ARE DIAGRAMMATIC AND ARE NOT TO BE SCALED. THE LOCATIONS OF EQUIPMENT AND ROUTING OF CONDUITS SHOWN ON THE CONTRACT DRAWINGS ARE APPROXIMATE.
4. THESE DRAWINGS ARE SCHEMATIC AND DO NOT PROVIDE COMPLETE ROUTING, MOUNTING AND INSTALLATION DETAILS FOR THE ELECTRICAL WORK. EXISTING CONDUITS AND CONDUCTORS NOT SHOWN. THE CONTRACTOR IS RESPONSIBLE FOR DETAILING ALL PORTIONS OF THE INSTALLATION AND SUBMITTING THESE SHOP DRAWINGS AND CATALOG CUTS TO THE ENGINEER FOR REVIEW AND APPROVAL.
5. ALL ELECTRICAL COMPONENTS AND MATERIAL SHOWN ON THE CONTRACT DRAWINGS ARE NEW UNLESS OTHERWISE NOTED.
6. THE CONTRACTOR SHALL PERFORM ALL CUTTING AND PATCHING AS REQUIRED FOR THE REMOVAL AND INSTALLATION OF ELECTRICAL COMPONENTS, HANGERS, SUPPORTS, ETC. ALL PATCHING SHALL BE DONE SO AS TO LEAVE THE AREA IN ITS ORIGINAL CONDITION AS A MINIMUM OR AS OTHERWISE REQUIRED BY THE DEPARTMENT.
7. EXISTING ELECTRICAL CABLE, WIRES, CONDUIT, CONDUIT HANGERS, SUPPORTS, CLAMPS, ETC., THAT ARE BEING REPLACED SHALL NOT BE REUSED. ALL SUCH PARTS SHALL BE REMOVED AND PROPERLY DISPOSED.
8. ALL NEW CONDUIT AND FITTINGS SHALL BE 3/4" MINIMUM HOT DIPPED GALVANIZED RIGID STEEL UNLESS OTHERWISE NOTED AND SHALL MEET ALL THE ADDITIONAL REQUIREMENTS FOR MATERIAL, CONSTRUCTION, AND INSTALLATION CONTAINED IN THE SPECIFICATIONS.
9. THE CONTRACTOR SHALL FURNISH AND INSTALL ALL REQUIRED BOXES, CONDUIT FITTINGS, ELBOWS, AND HARDWARE FOR A COMPLETE INSTALLATION WHETHER OR NOT THEY ARE EXPLICITLY SHOWN OR INDICATED ON THE CONTRACT DRAWINGS.
10. NEW ELECTRICAL CONDUCTORS SHALL BE MINIMUM SIZE NO. 12 AWG STRANDED TYPE XHHW EXCEPT FOR INTERNAL WIRING IN CONTROL CABINETS AND CONTROL DESK WHICH SHALL BE MINIMUM SIZE NO. 14 AWG TYPE SIS. ALL WIRES AND CABLES SHALL MEET ALL THE ADDITIONAL REQUIREMENTS FOR MATERIAL, CONSTRUCTION AND INSTALLATION CONTAINED IN THE RELEVANT SPECIFICATIONS.
11. ALL NEW CONDUCTORS INSTALLED IN CONDUIT SHALL BE INSTALLED WITH GROUND CONDUCTORS. GROUND CONDUCTORS SHALL BE PROVIDED IN ALL NEW FLEXIBLE CABLES. MINIMUM SIZE GROUND CONDUCTOR SHALL BE SIZE NO. 12 AWG. ALL CABINETS, TERMINAL AND JUNCTION BOXES SHALL BE GROUNDED IN ACCORDANCE WITH THE NEC.
12. ALL CONDUCTORS SHALL BE CONNECTED TO TERMINAL BLOCKS OR DEVICES. ALL SPLICES SHALL BE MADE USING TERMINAL BLOCKS.
13. EXISTING RACEWAYS TO BE USED WHERE POSSIBLE.
14. SEE SHEET E-03 FOR MACHINERY ROOM ELECTRICAL WORK IN PIERS.
15. REFER TO MECHANICAL DRAWING M-02 FOR NAVIGATION AND ROADWAY RESTRICTIONS DURING THE WORK.

ELECTRICAL SCOPE OF WORK:

1. REMOVE EXISTING FULLY SEATED PLUNGER LIMIT SWITCHES. PROVIDE AND INSTALL NEW FULLY SEATED PROXIMITY SWITCHES IN LOCATION OF EXISTING LIMIT SWITCHES.
2. PROVIDE AND INSTALL NEW JUNCTION BOX ON EMERGENCY CLUTCH AS SHOWN ON PLANS. PROVIDE AND INSTALL NEW EMERGENCY CLUTCH HAND CRANK LIMIT SWITCH AS SHOWN ON PLANS. CONNECT LIMIT SWITCH INTO CONTROL SYSTEM AS SHOWN ON PLANS.
3. REMOVE EXISTING BRAKE RELEASED AND BRAKE HAND RELEASED LIMIT SWITCHES FOR ALL THRUSTOR BRAKES. PROVIDE AND INSTALL NEW BRAKE RELEASED AND BRAKE HAND RELEASED LIMIT SWITCHES IN LOCATION OF EXISTING LIMIT SWITCHES FOR ALL THRUSTOR BRAKES. PROVIDE AND INSTALL NEW BRAKE SET LIMIT SWITCHES AND NEW BRAKE SET INDICATION LIGHTS FOR ALL THRUSTOR BRAKES AS SHOWN ON PLANS.
4. PROVIDE AND INSTALL NEW ANEMOMETER WITH DISPLAY.
5. REMOVE EXISTING HEAT PUMP SYSTEM FOR CONTROL HOUSE. PROVIDE AND INSTALL NEW HEAT PUMP SYSTEM FOR THE CONTROL HOUSE AS SHOWN ON PLANS.
6. REMOVE EXISTING SOUTHWEST PARAPET LIGHT BASE HAND HOLE COVER. PROVIDE AND INSTALL NEW SOUTHWEST PARAPET LIGHT BASE HAND HOLE COVER.
7. PROVIDE AND INSTALL NEW ENGRAVED, LAMINATED NAMEPLATES FOR ALL MOTORS AND BRAKE DISCONNECT SWITCHES. PROVIDE AND INSTALL NEW ENGRAVED, LAMINATED NAMEPLATES FOR ALL PILOT LIGHTS ON CONTROL CONSOLE.
8. PROVIDE AND INSTALL NEW UPDATED, LAMINATED COMPLETE PANEL SCHEDULES FOR ALL PANEL BOARDS THROUGHOUT THE BRIDGE.
9. REMOVE EXISTING GROUNDING CONDUCTOR. PROVIDE AND INSTALL NEW GROUNDING CONDUCTOR WITH PROPER INSULATION TO PREVENT CORROSION.
10. REMOVE EXISTING CONDUCTORS BETWEEN LOCAL TERMINAL BOX, THRUSTORS BRAKES, AND THRUSTOR BRAKE LIMIT SWITCHES FOR THE EAST LEAF. PROVIDE AND INSTALL NEW CONDUCTORS AND TERMINAL BLOCKS BETWEEN LOCAL TERMINAL BOX, THRUSTORS BRAKES, AND THRUSTOR BRAKE LIMIT SWITCHES FOR THE EAST LEAF. REMOVE EXISTING CONDUCTORS BETWEEN LOCAL TERMINAL BOX AND SPAN POSITION TRANSMITTER ROTARY CAM LIMIT SWITCHES. PROVIDE AND INSTALL NEW CONDUCTORS AND TERMINAL BLOCKS BETWEEN LOCAL TERMINAL BOX AND SPAN POSITION TRANSMITTER ROTARY CAM LIMIT SWITCHES.
11. REMOVE EXISTING CONDUITS, FITTINGS AND CONDUCTORS AS REQUIRED TO THE DISCONNECT SWITCH AND PULL BOX ON THE SOUTH SPAN LOCK PLATFORM. PROVIDE AND INSTALL NEW CONDUITS, FITTINGS AND CONDUCTORS AS REQUIRED TO THE DISCONNECT SWITCH AND PULL BOX ON THE SOUTH SPAN LOCK PLATFORM.
12. REMOVE EXISTING EAST AND WEST DROOP CABLES. REMOVE DROOP CABLE TERMINAL BOXES HARDWARE. PROVIDE AND INSTALL NEW EAST AND WEST DROOP CABLES. PROVIDE AND INSTALL NEW DROOP CABLE TERMINAL BOXES AND HARDWARE.
13. PROVIDE AND INSTALL NEW TERMINAL BLOCKS AS REQUIRED TO PROPERLY TERMINATE ALL CONDUCTORS WITHIN MOTOR CONTROL CENTER (MCC).
14. REPAIR THE CHAIN-LINK FENCE AROUND THE UTILITY TRANSFORMER AREA.
15. REPAIR THE FUEL OIL TANK HIGH LEVEL ALARM LIGHT.
16. PROPERLY TERMINATE THE WIRES IN ALL WARNING GATE ENCLOSURES. CLEAN AND REMOVE CORROSION ON ALL TERMINAL BLOCKS.
17. PROVIDE AND INSTALL NEW WARNING GATE HAND CRANK LIMIT SWITCHES AND DOOR SWITCHES FOR ALL WARNING GATES. TIE NEW LIMIT SWITCHES INTO THE CONTROL SYSTEM TO PREVENT OPERATION AND INJURY DURING HAND CRANKING AND/OR MAINTENANCE.
18. REMOVE EXISTING DOOR HARDWARE FOR ALL WARNING GATES. PROVIDE AND INSTALL NEW DOOR HARDWARE FOR ALL WARNING GATES.
19. REMOVE EXISTING WARNING GATE ARM FOR NORTHWEST WARNING GATE. PROVIDE AND INSTALL NEW WARNING GATE ARM WITH LED LIGHTS FOR NORTHWEST WARNING GATE. PROVIDE ONE SPARE GATE ARM WITH LED LIGHTS TO MATCH EXISTING.
20. REPAIR THE NORTHWEST WARNING GATE LOWERED INDICATION LIGHT ON THE CONTROL DESK.

REV.	DATE	REVISION DESCRIPTION	SHEET NO.
-	-	-	-
-	-	-	-
-	-	-	-
-	-	-	-
-	-	-	-
-	-	-	-

THE INFORMATION, INCLUDING ESTIMATED QUANTITIES OF WORK, SHOWN ON THESE SHEETS IS BASED ON LIMITED INVESTIGATIONS BY THE STATE AND IS IN NO WAY WARRANTED TO INDICATE THE CONDITIONS OF ACTUAL QUANTITIES OF WORK WHICH WILL BE REQUIRED.

Plotted Date: 9/25/2018

DESIGNER/DRAFTER: M.V.G.
CHECKED BY: A.H.N.
SCALE: 1" = 30'

STATE OF CONNECTICUT
DEPARTMENT OF TRANSPORTATION

Filename: ...\SB_MST_Br2295_173-462_ELE_Gen_Plan_Elev_Notes_and_Scope.dgn

SIGNATURE/BLOCK:
Hardesty & Hanover
59 ELM STREET, SUITE 406
NEW HAVEN, CT 06510
(203) 772-2857

PROJECT TITLE:
REHABILITATION OF BRIDGE NO. 02295, ROUTE 136 OVER NORWALK RIVER

TOWN: **NORWALK**

DRAWING TITLE: **GENERAL PLAN, ELEVATION AND NOTES**

PROJECT NO. **173-462**
DRAWING NO. **E-02**
SHEET NO. **07.02**

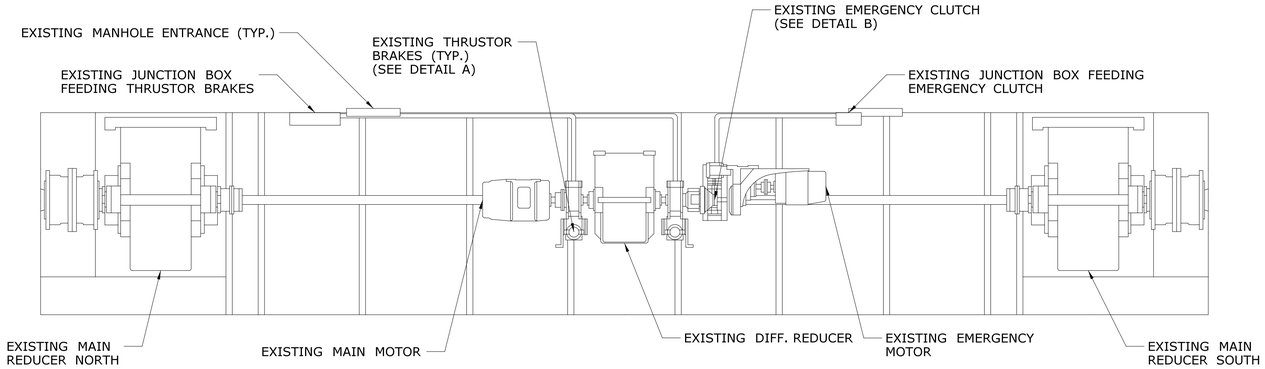

MACHINERY ROOM - PLAN

(WEST LEAF SHOWN. EAST LEAF OPPOSITE HAND.)

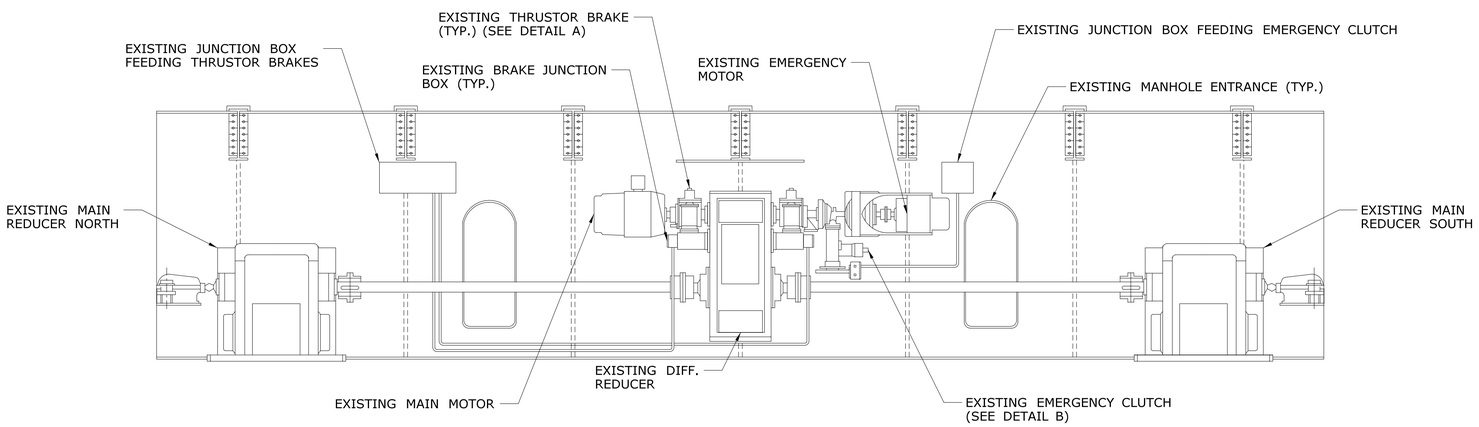

MACHINERY ROOM - ELEVATION

(WEST LEAF SHOWN. EAST LEAF OPPOSITE HAND.)

RELATED SCOPE OF WORK

1. PROVIDE AND INSTALL NEW HAND CRANK LIMIT SWITCH AND TIE INTO THE EXISTING CONTROL SYSTEM TO PREVENT ELECTRICAL OPERATION OF THE CLUTCH WHEN HAND CRANK DEVICE IS INSERTED.
2. REMOVE AND PROVIDE AND INSTALL NEW BRAKE SET, RELEASED AND HAND RELEASED LIMIT SWITCHES FOR ALL THRUSTOR BRAKES. PROVIDE NEW WIRING AND INDICATION LIGHTS ON CONTROL DESK FOR NEW SET LIMIT SWITCHES.
3. PROVIDE AND INSTALL NEW ENGRAVED, LAMINATED NAMEPLATES FOR ALL MOTOR AND BRAKE DISCONNECT SWITCHES.
4. REMOVE AND PROVIDE AND INSTALL NEW CONDUCTORS FOR THE EAST LEAF BETWEEN LOCAL TERMINAL BOX AND BRAKE THRUSTERS AND LIMIT SWITCHES. REMOVE AND PROVIDE AND INSTALL NEW CONDUCTORS FOR THE EAST LEAF BETWEEN LOCAL TERMINAL BOX AND SPAN POSITION TRANSMITTER ROTARY CAM LIMIT SWITCH. PROVIDE AND INSTALL NEW TERMINAL BLOCKS IN ALL TERMINAL BOXES.

NOTES:

1. PLAN VIEW, DETAILS AND SECTIONS ARE REFERENCED FROM EXISTING AS-BUILT DRAWINGS. CONTRACTOR TO FIELD VERIFY ALL EXISTING CONDITIONS. EXISTING DRAWINGS AND AS-BUILTS ARE AVAILABLE FROM ENGINEER.
2. REMOVE AND DISPOSE OF EXISTING LIMIT SWITCHES. NEW BRAKE LIMIT SWITCHES TO BE INSTALLED IN A MANNER SIMILAR TO EXISTING LIMIT SWITCHES.
3. NEW EMERGENCY CLUTCH LOCKOUT BOX (SS 4"X4"X3" JUNCTION BOX) TO BE INSTALLED IN A MANNER SUCH THAT THE NEW MICRO LIMIT SWITCH WILL BE ACTIVATED WHEN THE JUNCTION BOX COVER IS IN LATCHED ONTO JUNCTION BOX.
4. FOR NEW EMERGENCY CLUTCH HAND CRANK LIMIT SWITCH WIRING, SEE SCHEMATIC ON SHEET E-05.

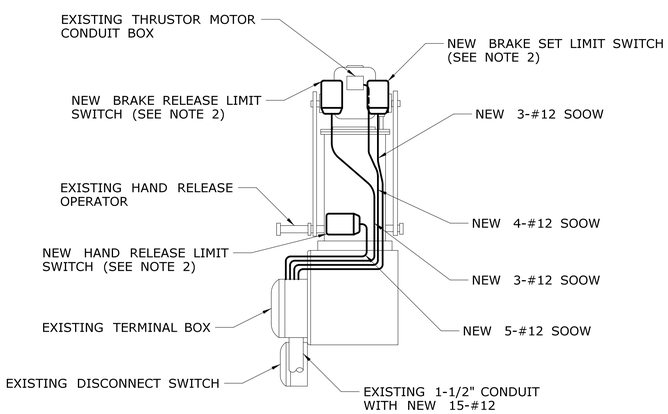

DETAIL A: THRUSTOR BRAKE LIMIT SWITCH DETAIL

(MAIN MOTOR BRAKE SHOWN. EMERGENCY MOTOR BRAKE OPPOSITE HAND.)

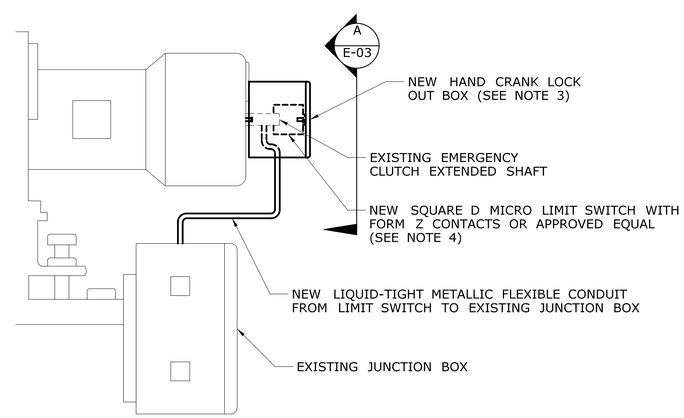

DETAIL B: EMERGENCY CLUTCH SIDE VIEW

(WEST LEAF CLUTCH SHOWN. EAST LEAF CLUTCH OPPOSITE HAND.)

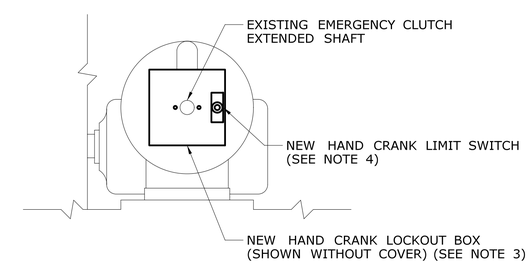

SECTION A-A: EMERGENCY CLUTCH FRONT VIEW

REV.	DATE	REVISION DESCRIPTION	SHEET NO.
-	-	-	-
-	-	-	-
-	-	-	-
-	-	-	-
-	-	-	-
-	-	-	-

THE INFORMATION, INCLUDING ESTIMATED QUANTITIES OF WORK, SHOWN ON THESE SHEETS IS BASED ON LIMITED INVESTIGATIONS BY THE STATE AND IS IN NO WAY WARRANTED TO INDICATE THE CONDITIONS OF ACTUAL QUANTITIES OF WORK WHICH WILL BE REQUIRED.

Plotted Date: 9/25/2018

DESIGNER/DRAFTER: M.A.E.
CHECKED BY: A.H.N.
SCALE: N.T.S.

STATE OF CONNECTICUT
DEPARTMENT OF TRANSPORTATION

Filename: ...\SB_MST_Br2295_173-462_ELE_Machinery_Room_Electrical_Work.dgn

SIGNATURE/BLOCK:
Hardesty & Hanover
59 ELM STREET, SUITE 406
NEW HAVEN, CT 06510
(203) 772-2857

PROJECT TITLE:
REHABILITATION OF BRIDGE NO. 02295, ROUTE 136 OVER NORWALK RIVER

TOWN: NORWALK

DRAWING TITLE:
MACHINERY ROOM ELECTRICAL WORK

PROJECT NO. 173-462
DRAWING NO. E-03
SHEET NO. 07.03

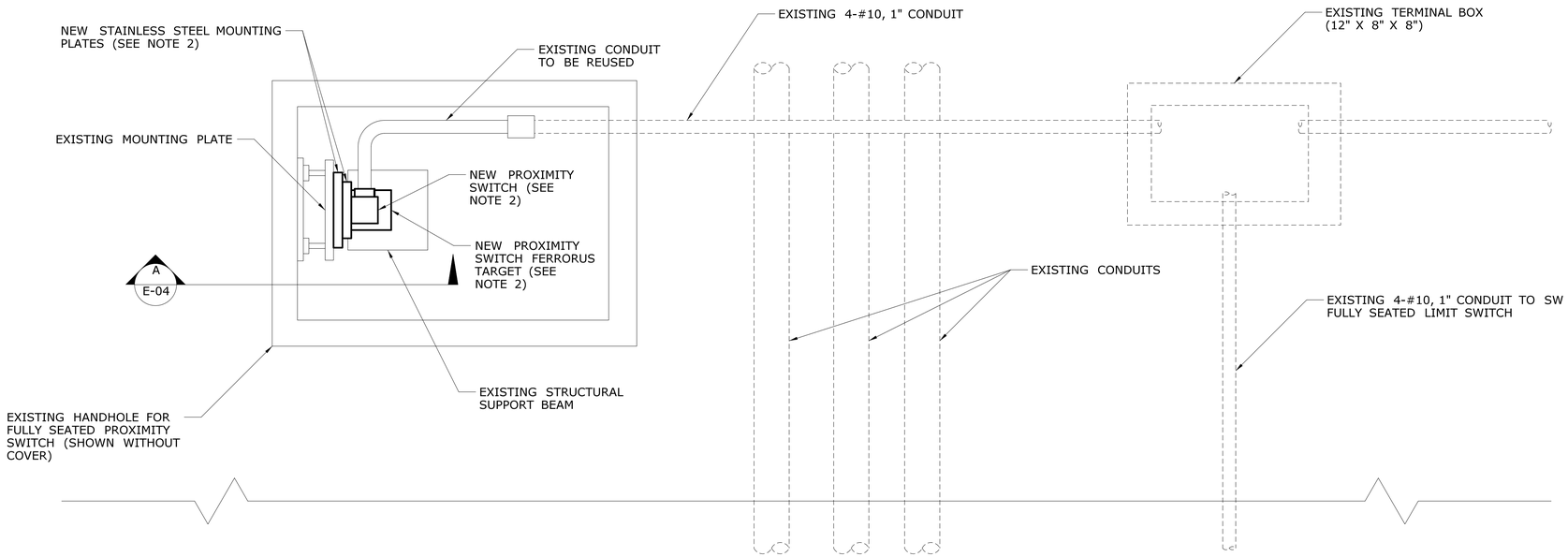

FULLY SEATED PROXIMITY SWITCH - PROPOSED

SCALE: N.T.S.

(PLAN VIEW) (SW CORNER SHOWN) (TYP. FOR 4 CORNERS)

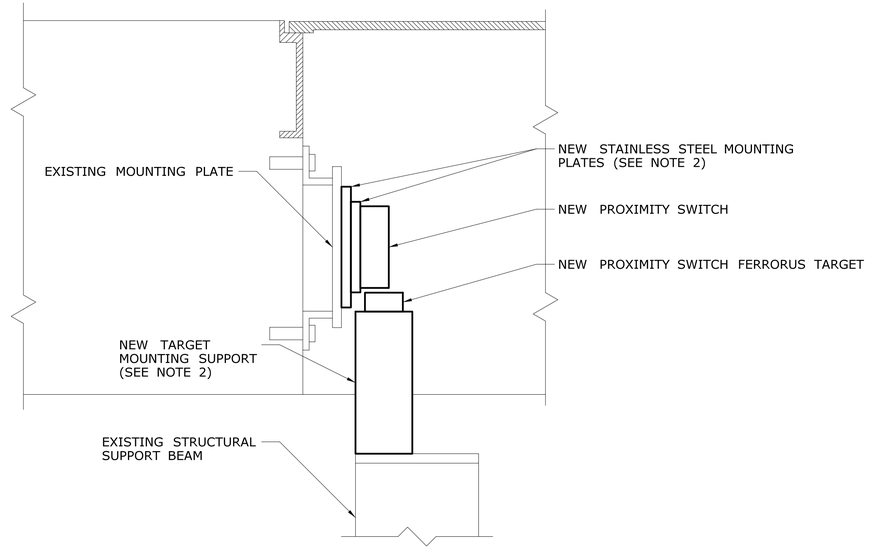

SECTION A-A: FULLY SEATED PROXIMITY SWITCH - PROPOSED

SCALE: N.T.S.

(ELEVATION VIEW) (SW CORNER SHOWN) (TYP. FOR 4 CORNERS)

RELATED SCOPE OF WORK

1. REPLACE SPAN SEATED LIMIT SWITCHES WITH NEW LIMIT SWITCHES.
2. PROVIDE AND INSTALL NEW HAND CRANK LIMIT SWITCH AND CONNECT INTO THE EXISTING CONTROL SYSTEM TO PREVENT ELECTRICAL OPERATION OF THE CLUTCH WHEN HAND CRANK DEVICE IS INSERTED.

NOTES:

1. VIEWS AND SECTIONS ARE REFERENCED FROM EXISTING AS-BUILT DRAWINGS. CONTRACTOR TO FIELD VERIFY ALL EXISTING CONDITIONS. EXISTING AS-BUILTS ARE AVAILABLE FROM THE ENGINEER.
2. REMOVE AND DISPOSE OF EXISTING PLUNGER LIMIT SWITCHES ON EXISTING MOUNTING PLATE. NEW MOUNTING PLATES SHALL BE MADE SUCH THAT IT IS SIMILAR IN NATURE TO EXISTING MOUNTING PLATE. MOUNTING PLATE SHALL BE EXTENDED OUTWARD UNTIL PROXIMITY SWITCH IS IN-LINE WITH FERROROUS TARGET. NEW TARGET MOUNTING SUPPORT SHALL BE MADE SUCH THAT THE FERRORUS TARGET IS NO MORE THAN 1/4" AWAY FROM PROXIMITY SWITCH.

REV.	DATE	REVISION DESCRIPTION	SHEET NO.

THE INFORMATION, INCLUDING ESTIMATED QUANTITIES OF WORK, SHOWN ON THESE SHEETS IS BASED ON LIMITED INVESTIGATIONS BY THE STATE AND IS IN NO WAY WARRANTED TO INDICATE THE CONDITIONS OF ACTUAL QUANTITIES OF WORK WHICH WILL BE REQUIRED.

Plotted Date: 9/25/2018

DESIGNER/DRAFTER: M.A.E.

CHECKED BY: A.H.N.

SCALE: AS NOTED

STATE OF CONNECTICUT
DEPARTMENT OF TRANSPORTATION

Filename: ...\SB_MST_Br2295_173-462_ELE_Fully_Seated_Proximity_Switch_Details.dgn

SIGNATURE/BLOCK:

Hardesty & Hanover
59 ELM STREET, SUITE 406
NEW HAVEN, CT 06510
(203) 772-2857

PROJECT TITLE:

REHABILITATION OF BRIDGE NO. 02295, ROUTE 136 OVER NORWALK RIVER

TOWN: NORWALK

DRAWING TITLE: **FULLY SEATED PROXIMITY SWITCH DETAILS**

PROJECT NO. 173-462

DRAWING NO. E-04

SHEET NO. 07.04

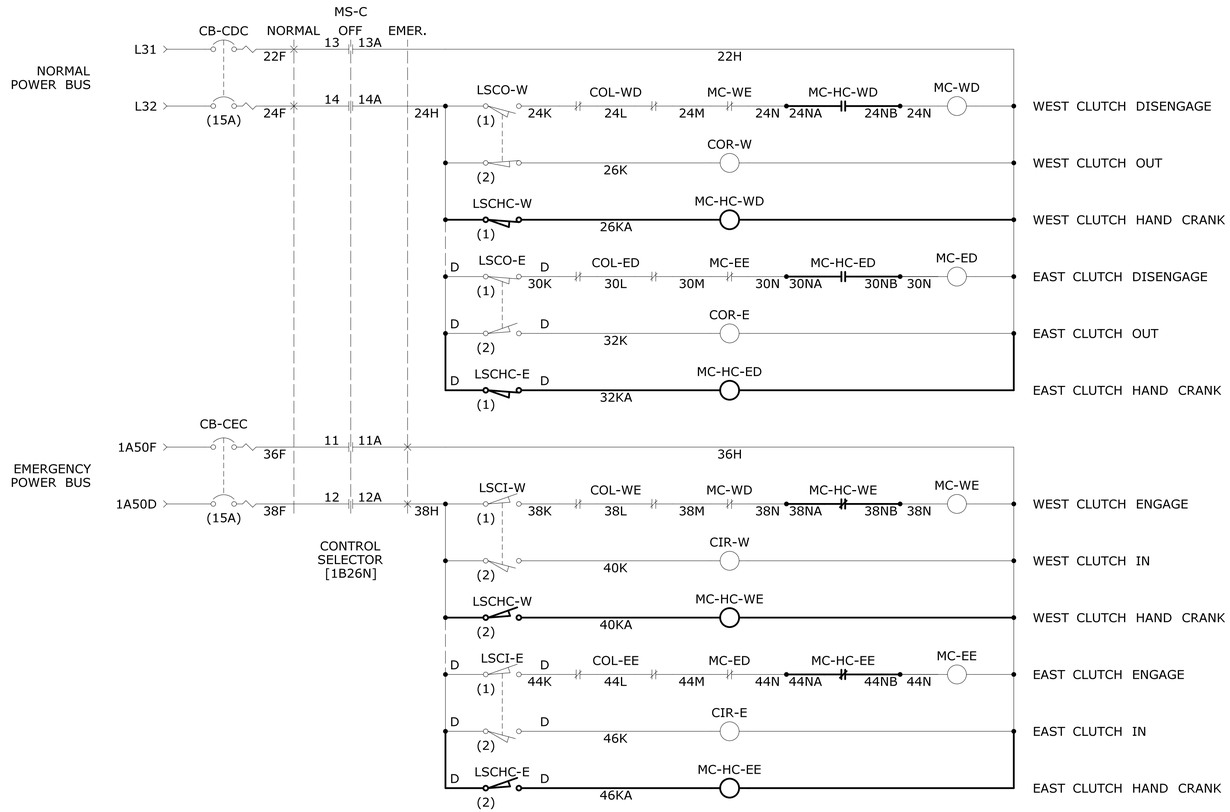

EMERGENCY CLUTCH HAND CRANK LIMIT SWITCH WIRING DIAGRAM

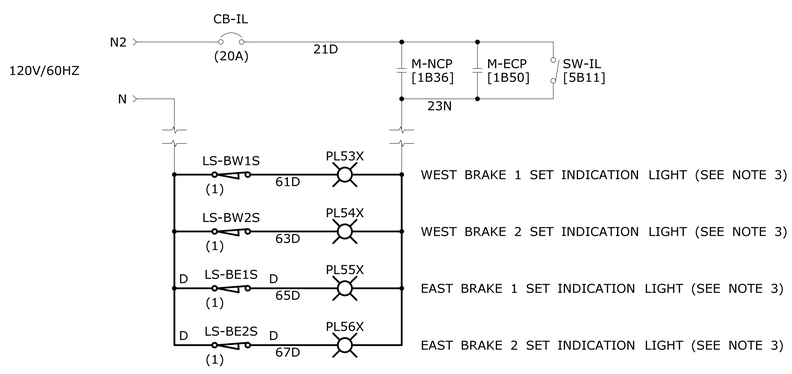

BRAKE SET INDICATING LIGHT WIRING DIAGRAM

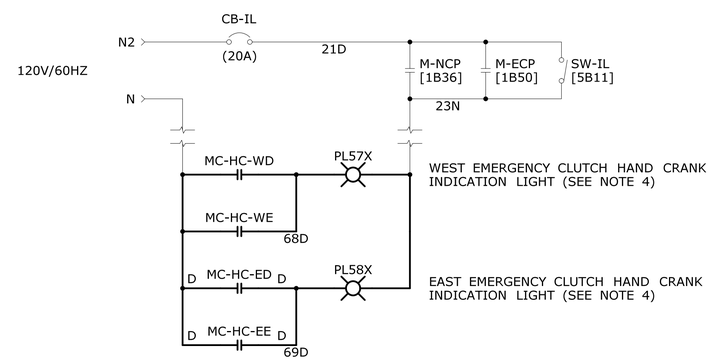

EMERGENCY CLUTCH HAND CRANK INDICATING LIGHT WIRING DIAGRAM

RELATED SCOPE OF WORK

1. PROVIDE AND INSTALL NEW HAND CRANK LIMIT SWITCH AND CONNECT INTO THE EXISTING CONTROL SYSTEM TO PREVENT ELECTRICAL OPERATION OF THE CLUTCH WHEN HAND CRANK DEVICE IS INSERTED.

NOTES:

1. SCHEMATICS ARE REFERENCED FROM EXISTING AS-BUILT DRAWINGS. CONTRACTOR TO FIELD VERIFY ALL EXISTING CONDITIONS. EXISTING AS-BUILTS ARE AVAILABLE FROM THE ENGINEER.
2. EXISTING WIRING AND CONNECTIONS ARE REFERENCES FROM EXISTING AS-BUILT DRAWINGS GENERAL ELECTRIC CO. #302-81901/313-81-391.
3. NEW BRAKE SET INDICATION LIGHT SHALL BE LOCATED NEXT TO EXISTING BRAKE RELEASED INDICATING LIGHT ON CONTROL DESK. NEW BRAKE SET INDICATION LIGHT SHALL HAVE GREEN LENSES.
4. NEW EMERGENCY CLUTCH HAND CRANK INDICATION SHALL BE LOCATED NEXT TO EXISTING CLUTCH POWER INDICATING LIGHT NEAR EXISTING CONTROL SELECTOR SWITCH ON CONTROL DESK. NEW EMERGENCY CLUTCH HAND CRANK INDICATION LIGHT SHALL HAVE RED LENSES.

LEGEND

D	SUBMARINE CABLE CONNECTION
	EXISTING DEVICE/WIRE
	NEW DEVICE/WIRE
	RELAY/CONTACTOR COIL
	NORMALLY OPEN CONTACT
	NORMALLY CLOSED CONTACT
	CIRCUIT BREAKER
	THERMAL MAGNETIC CIRCUIT BREAKER
	NORMALLY OPEN LIMIT SWITCH
	NORMALLY CLOSED LIMIT SWITCH
	NORMALLY OPEN HELD CLOSED
	NORMALLY CLOSED HELD OPEN
	PILOT LIGHT
A B C	SWITCH IN NORMAL CONDITION "B"
	CONDITION "A" MET
	CONDITION "C" MET

REV.	DATE	REVISION DESCRIPTION	SHEET NO.
-	-	-	-
-	-	-	-
-	-	-	-
-	-	-	-
-	-	-	-
-	-	-	-

THE INFORMATION, INCLUDING ESTIMATED QUANTITIES OF WORK, SHOWN ON THESE SHEETS IS BASED ON LIMITED INVESTIGATIONS BY THE STATE AND IS IN NO WAY WARRANTED TO INDICATE THE CONDITIONS OF ACTUAL QUANTITIES OF WORK WHICH WILL BE REQUIRED.

Plotted Date: 9/25/2018

DESIGNER/DRAFTER: M.A.E.
CHECKED BY: A.H.N.
SCALE: NO SCALE

STATE OF CONNECTICUT
DEPARTMENT OF TRANSPORTATION

Filename: ...\SB_MST_Br2295_173-462_ELE_Wiring Diagrams.dgn

SIGNATURE/BLOCK:
Hardesty & Hanover
59 ELM STREET, SUITE 406
NEW HAVEN, CT 06510
(203) 772-2857

PROJECT TITLE:
REHABILITATION OF BRIDGE NO. 02295, ROUTE 136 OVER NORWALK RIVER

TOWN: NORWALK

DRAWING TITLE: WIRING DIAGRAMS

PROJECT NO. 173-462
DRAWING NO. E-05
SHEET NO. 07.05