03 - STRUCTURES
INDEX OF DRAWINGS

DRAWING NUMBER	DRAWING TITLE	DRAWING NUMBER	DRAWING TITLE
S-01	SUBSET COVER SHEET - INDEX OF DRAWINGS - 1	S-21	SPAN A-1 G8 DETERIORATION
S-02	SUBSET COVER SHEET - INDEX OF DRAWINGS - 2	S-22	SPAN A-1 G9 DETERORATION
S-03	GENERAL PLAN & ELEVATION	S-23	SPAN A-1 G10 DETERIORATION
S-04	GENERAL NOTES	S-24	SPAN A-1 G11 DETERIORATION
S-05	TYPICAL SECTION - 1	S-25	SPAN P-2 FRAMING PLAN
S-06	TYPICAL SECTION - 2	S-26	SPAN P-2 G1 DETERIORATION
S-07	CONSTRUCTION STAGES	S-27	SPAN P-2 G2 DETERIORATION
S-08	ABUTMENT NO. 1	S-28	SPAN P-2 G3 DETERIORATION
S-09	ABUTMENT NO. 2	S-29	SPAN P-2 G5 DETERIORATION
S-10	PIER NO. 1	S-30	SPAN P-2 G7 DETERIORATION
S-11	PIER NO. 2	S-31	SPAN P-2 G8 DETERIORATION
S-12	PIER NO. 3	S-32	SPAN P-2 G9 DETERIORATION
S-13	SUBSTRUCTURE REPAIR DETAILS	S-33	SPAN P-2 G10 DETERIORATION
S-14	SPAN A-1 FRAMING PLAN	S-34	SPAN P-2 G11 DETERIORATION
S-15	SPAN A-1 G1 DETERIORATION	S-35	SPAN P-3 FRAMING PLAN
S-16	SPAN A-1 G2 DETERIORATION	S-36	SPAN P-3 G1 DETERIORATION
S-17	SPAN A-1 G3 DETERIORATION	S-37	SPAN P-3 G2 DETERIORATION
S-18	SPAN A-1 G4 DETERIORATION	S-38	SPAN P-3 G3 DETERIORATION
S-19	SPAN A-1 G6 DETERIORATION	S-39	SPAN P-3 G4 DETERIORATION
S-20	SPAN A-1 G7 DETERIORATION	S-40	SPAN P-3 G5 DETERIORATION

DESIGNED BY:
CLOSE, JENSEN AND MILLER, PC

Close, Jensen and Miller, P.C.
1137 Silas Deane Highway
Wethersfield, CT 06109

Digitally signed by John Miller
Date: 2018.09.25 12:03:33-04'00'

REV.	DATE	REVISION DESCRIPTION	SHEET NO.

THE INFORMATION, INCLUDING ESTIMATED QUANTITIES OF WORK, SHOWN ON THESE SHEETS IS BASED ON LIMITED INVESTIGATIONS BY THE STATE AND IS IN NO WAY WARRANTED TO INDICATE THE CONDITIONS OF ACTUAL QUANTITIES OF WORK WHICH WILL BE REQUIRED.

Plotted Date: 9/25/2018

DESIGNER/DRAFTER: B.A./S.C.
CHECKED BY: J.H.M. II

STATE OF CONNECTICUT
DEPARTMENT OF TRANSPORTATION

Filename: ..\SB_MSH_173_462_BR02295_S-01_INDEX_SHEET-1.dgn

SIGNATURE/BLOCK:
Close, Jensen and Miller, P.C.
1137 Silas Deane Highway
Wethersfield, CT 06109

PROJECT TITLE:
REHABILITATION OF BRIDGE
NO. 02295, ROUTE 136
OVER NORWALK RIVER

TOWN: NORWALK

DRAWING TITLE:
SUBSET COVER SHEET
INDEX OF DRAWINGS-1

PROJECT NO. 173-462
DRAWING NO. S-01
SHEET NO. 03.01

03 - STRUCTURES
INDEX OF DRAWINGS

DRAWING NUMBER	DRAWING TITLE	DRAWING NUMBER	DRAWING TITLE
S-41	SPAN P-3 G6 DETERIORATION	S-62	DECK PLAN GRID SPAN P-2
S-42	SPAN P-3 G7 DETERIORATION	S-63	DECK PLAN SPAN P-3
S-43	SPAN P-3 G8 DETERIORATION	S-64	DECK PLAN GRID SPAN P-3
S-44	SPAN P-3 G9 DETERIORATION	S-65	DECK PLAN SPAN P-1 (TOP)
S-45	SPAN P-3 G10 DETERIORATION	S-66	DECK PLAN SPAN P-1 (BOTTOM)
S-46	SPAN P-3 G11 DETERIORATION	S-67	DECK REHABILITATION PATCH DETAILS - 1
S-47	TYPICAL CONCRETE BEAM REPAIR DETAILS	S-68	DECK REHABILITATION PATCH DETAILS - 2
S-48	EXISTING BEARINGS	S-69	DECK REPAIR DETAILS - 1
S-49	FRAMING PLAN, SPAN P-1, EAST AND WEST	S-70	BASCULE GRID DECK SPAN P-1
S-50	FRAMING PLAN, SPAN P-1 (BASCULE)	S-71	GRID DECK REPAIR DETAILS - 1
S-51	TYPICAL BASCULAR GIRDER	S-72	GRID DECK REPAIR DETAILS - 2
S-52	TYPICAL BASCULE CONNECTION DETAILS - 1	S-73	GRID DECK REPAIRS DETAILS - 3
S-53	TYPICAL BASCULE CONNECTION DETAILS - 2	S-74	JOINT REPAIR DETAILS - 1
S-54	SPAN P-1 (BASCULE) STEEL REPAIRS	S-75	JOINT REPAIR DETAILS - 2
S-55	STEEL REPAIR DETAILS - 1	S-76	JOINT REPAIR DETAILS - 3
S-56	STEEL REPAIR DETAILS - 2	S-77	JOINT REPAIR DETAILS - 4
S-57	STEEL REPAIR DETAILS - 3	S-78	MISCELLANEOUS DETAILS
S-58	STEEL REPAIRS AND PAINTING LIMITS	S-79	AVIARY PROTECTION SCREEN REPAIR DETAIL
S-59	DECK PLAN, SPAN A-1	S-80	FENDER REPAIR
S-60	DECK PLAN GRID, SPAN A-1	S-81	DOLPHIN REPAIR DETAILS
S-61	DECK PLAN SPAN P-2		

DESIGNED BY:
CLOSE, JENSEN AND MILLER, PC

REV.	DATE	REVISION DESCRIPTION	SHEET NO.

THE INFORMATION, INCLUDING ESTIMATED QUANTITIES OF WORK, SHOWN ON THESE SHEETS IS BASED ON LIMITED INVESTIGATIONS BY THE STATE AND IS IN NO WAY WARRANTED TO INDICATE THE CONDITIONS OF ACTUAL QUANTITIES OF WORK WHICH WILL BE REQUIRED.

Plotted Date: 9/25/2018

DESIGNER/DRAFTER: B.A./S.C.
CHECKED BY: J.H.M. II

STATE OF CONNECTICUT
DEPARTMENT OF TRANSPORTATION

Filename: ..\SB_MSH_173_462_BR02295_S-02_INDEX_SHEET-2.dgn

SIGNATURE/ BLOCK:
Close, Jensen and Miller, P.C.
1137 Silas Deane Highway
Wethersfield, CT 06109

PROJECT TITLE:
REHABILITATION OF BRIDGE
NO. 02295, ROUTE 136
OVER NORWALK RIVER

TOWN: NORWALK

DRAWING TITLE:
SUBSET COVER SHEET
INDEX OF DRAWINGS-2

PROJECT NO. 173-462
DRAWING NO. S-02
SHEET NO. 03.02

GENERAL NOTE:

ALL WORK ADJACENT TO THE NAVIGATION CHANNEL BETWEEN PIER NOS. 1 AND 2 SHALL BE PERFORMED IN ACCORDANCE WITH THE "GENERAL CONSTRUCTION REQUIREMENTS" OF THE U.S. COAST GUARD AS SPECIFIED IN THE CONTRACT SPECIAL PROVISIONS. THE EXISTING MINIMUM VERTICAL CLEARANCE OF 10.5 FEET ABOVE THE MEAN HIGH WATER ELEVATION SHALL BE MAINTAINED AT ALL TIMES. FLOATING WORK PLATFORMS WILL BE ALLOWED TO ACCESS THE FENDER SYSTEM WORK WITHIN THE NAVIGATION CHANNEL. SPUDDING OF BARGES WILL NOT BE ALLOWED, AND FLOATING WORK PLATFORMS MUST BE REMOVED FROM THE NAVIGATION CHANNEL WHEN WORK IS NOT BEING PERFOMED FROM THEM. FENDER REPAIRS SHALL BE ABOVE THE HIGH TIDE LINE ELEVATION.

GENERAL SCOPE OF WORK

1. REPAIR CONCRETE FILLED STEEL GRID DECKING AND INSTALL A THIN POLYMER (EPOXY) OVERLAY ATOP THE CONCRETE FILLED GRID DECK, SIDEWALK AND ACCESS PANEL HATCHES.
2. MILL AND PATCH CONCRETE DECK, SPAN NO'S. A-1, P-2, P-3 AND DECKS OVER COUNTERWEIGHTS, AND INSTALL MEMBRANE WATERPROOFING AND PAVE. CONSTRUCT DECK WEEP HOLES.
3. REPLACE EXISTING DECK JOINTS AT ABUTMENTS AND PIERS 1 - 3 WITH ASPHALTIC PLUG EXPANSION JOINT SYSTEM.
4. PATCH THE EXISTING SUBSTRUCTURE. ALL SUBSTRUCTURE REPAIRS SHALL BE ABOVE THE HIGH TIDE LINE.
5. REPAIR EXISTING PRESTRESSED CONCRETE BEAMS.
6. CLEAN, PAINT AND REPAIR EXISTING STRUCTURAL STEEL, AS NECESSARY.
7. PROVIDE REPAIRS TO THE MECHANICAL AND ELECTRICAL SYSTEMS. (SEE RESPECTIVE SUBSETS).

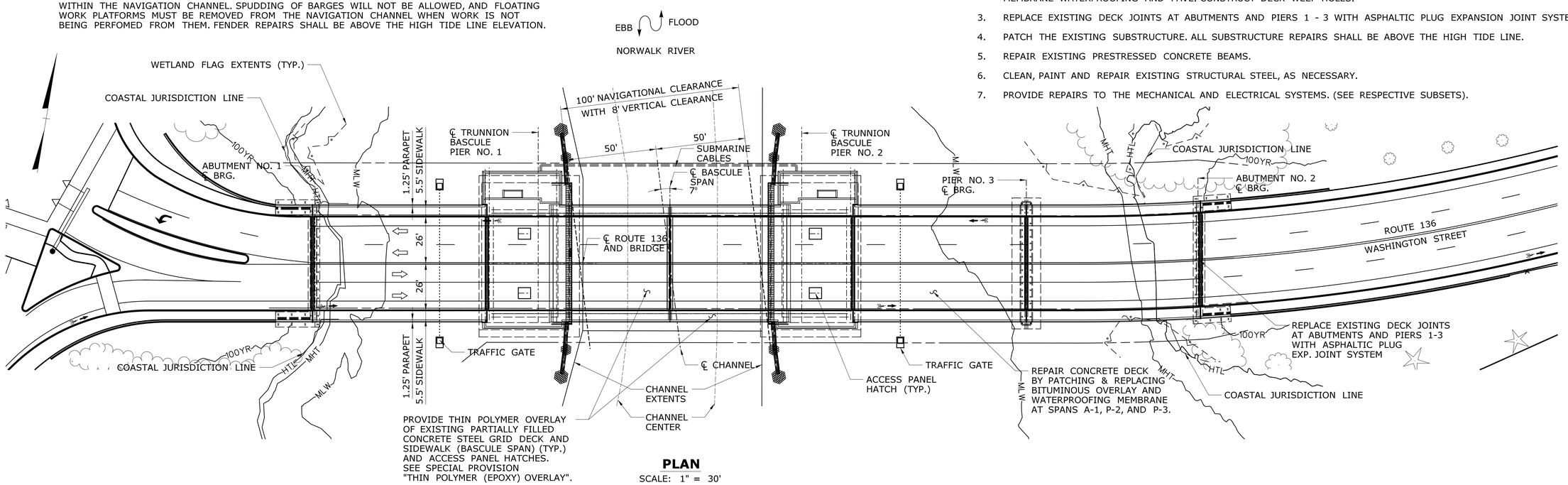

PLAN

SCALE: 1" = 30'

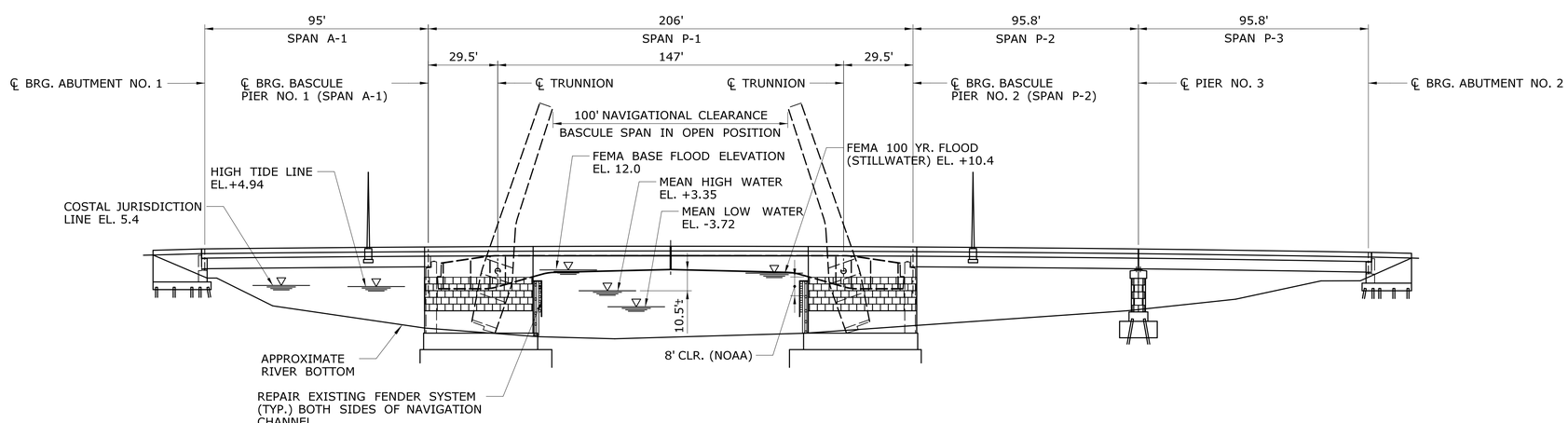

ELEVATION

SCALE: 1" = 30'

NOTES:

1. FLOATING WORK PLATFORMS MAY BE UTILIZED FOR FENDER REPAIR OPERATIONS. THE TIMES WHEN THE PLATFORM CAN OCCUPY THE CHANNEL ARE LIMITED TO DAYTIME WORKING HOURS. PLATFORMS MAY ONLY BE UTILIZED ON ONE SIDE OF THE CHANNEL AT A TIME.
2. ALL TEMPORARY FACILITIES AND EQUIPMENT BELOW THE 100 YEAR FLOOD ELEVATION WILL BE SUBJECT TO REMOVAL IN THE EVENT OF A FLOOD WARNING. THIS REMOVAL SHALL BE PERFORMED UNDER AN APPROPRIATE EVACUATION PLAN TO BE APPROVED BY THE ENGINEER.
3. THE CONTRACTOR WILL BE REQUIRED TO PROVIDE DEBRIS SHIELDING WHERE IT IS ANTICIPATED THAT FULL DEPTH DECK PATCHING WILL OCCUR.

REV.	DATE	REVISION DESCRIPTION	SHEET NO.

THE INFORMATION, INCLUDING ESTIMATED QUANTITIES OF WORK, SHOWN ON THESE SHEETS IS BASED ON LIMITED INVESTIGATIONS BY THE STATE AND IS IN NO WAY WARRANTED TO INDICATE THE CONDITIONS OF ACTUAL QUANTITIES OF WORK WHICH WILL BE REQUIRED.

Plotted Date: 9/25/2018

DESIGNER/DRAFTER: B.A./S.C.

CHECKED BY: J.H.M. II

SCALE AS NOTED

STATE OF CONNECTICUT
DEPARTMENT OF TRANSPORTATION

Filename: ...\SB_MSH_173_462_BR02295_S-03_GEN.dgn

SIGNATURE/BLOCK:

Close, Jensen and Miller, P.C.
1137 Silas Deane Highway
Wethersfield, CT 06109

PROJECT TITLE:

REHABILITATION OF BRIDGE NO. 02295, ROUTE 136 OVER NORWALK RIVER

TOWN: **NORWALK**

DRAWING TITLE: **GENERAL PLAN AND ELEVATION**

PROJECT NO. 173-462

DRAWING NO. S-03

SHEET NO. 03.03

GENERAL NOTES:

SPECIFICATIONS:
CONNECTICUT DEPARTMENT OF TRANSPORTATION FORM 817 (2016), SUPPLEMENTAL SPECIFICATIONS JANUARY 2018, AND SPECIAL PROVISIONS.

DESIGN SPECIFICATIONS:
AASHTO LRFD BRIDGE DESIGN SPECIFICATION, (AASHTO 8TH EDITION, 2017) INCLUDING INTERIM'S THROUGH 2016, AS SUPPLEMENTED BY THE CONNECTICUT DEPARTMENT OF TRANSPORTATION BRIDGE DESIGN MANUAL (2003 WITH INTERIM REVISIONS UP TO AND INCLUDING 2011). AASHTO LRFD MOVABLE HIGHWAY BRIDGE DESIGN SPECIFICATIONS (AASHTO 2007, 2ND EDITION), WITH REVISIONS DATED 2014.

ALLOWABLE DESIGN STRESSES:

CLASS "S" CONCRETE	f'c = 4,000 psi
REINFORCEMENT: (ASTM A615 GRADE 60)	fy = 60,000 psi
STRUCTURAL STEEL FOR REPAIRS (AASHTO M270, GRADE 50)	Fy = 50,000 psi

HIGH EARLY STRENGTH CONCRETE:
- SHALL ATTAIN A 1 HOUR MINIMUM COMPRESSIVE STRENGTH OF 2,500 psi
- SHALL ATTAIN A 28 DAY COMPRESSIVE STRENGTH OF 5,000 psi, AND
- SHALL ATTAIN A MINIMUM COMPRESSIVE STRENGTH OF 3,500 psi PRIOR TO PLACEMENT OF "MEMBRANE WATERPROOFING (COLD LIQUID ELASTOMERIC)" AND PRIOR TO ALLOWING TRAFFIC ON THE PATCHED SURFACES.

LIVE LOAD:
HL-93 (STEEL REPAIRS ONLY)

FUTURE PAVING ALLOWANCE:
NONE

STRUCTURAL STEEL:
SEE STRUCTURE SHEET NOTES FOR DESIGNATIONS AND REQUIREMENTS.

PAINT:
PAINT SHALL CONFORM TO THE REQUIREMENTS OF THE SPECIAL PROVISION "LOCALIZED PAINT REMOVAL AND FIELD PAINTING OF EXISTING STEEL".
THE COLOR OF THE TOP COAT MATERIAL ON REPAIR AND EXISTING STRUCTURAL STEEL SHALL CONFORM TO FEDERAL STANDARD COLOR, AND MATCH EXISTING.

BITUMINOUS CONCRETE OVERLAY:
THIS SHALL CONSIST OF TWO LIFTS. THE FIRST SHALL BE HMA S0.25 (1" THICK), TRAFFIC LEVEL 2, AND THE SECOND SHALL BE HMA S0.375 (1.5" THICK), TRAFFIC LEVEL 2, TO MATCH EXISTING CROSS-SLOPE.

DIMENSIONS:
WHEN DECIMAL DIMENSIONS ARE GIVEN TO LESS THAN THREE DECIMAL PLACES, THE OMITTED DIGITS SHALL BE ASSUMED TO BE ZEROS.

EXISTING DIMENSIONS:
DIMENSIONS OF THE EXISTING STRUCTURES SHOWN ON THESE PLANS ARE FOR GENERAL REFERENCE ONLY. THEY HAVE BEEN TAKEN FROM ORIGINAL DESIGN AND REHABILITATION DRAWINGS (PROJECTS 0102-0050 DATED 1948, 0102-0126 DATED 1968, 0102-0282 DATED 1998, 0102-0300 DATED 2006 AND 0102-0357 DATED 2016) AND FROM BRIDGE INSPECTION REPORTS AVAILABLE AT THE TIME AND ARE NOT GUARANTEED. THE CONTRACTOR SHALL TAKE ALL FIELD MEASUREMENTS NECESSARY TO ASSURE PROPER FIT OF THE FINISHED WORK, AND SHALL ASSUME FULL RESPONSIBILITY FOR THEIR ACCURACY. WHEN SHOP DRAWINGS BASED ON FIELD MEASUREMENTS ARE SUBMITTED FOR APPROVAL, THE FIELD MEASUREMENTS SHALL ALSO BE SUBMITTED FOR THE REFERENCE OF THE REVIEWER.

EXISTING PLANS:
INFORMATION PERTAINING TO THE EXISTING STRUCTURE IS BASED ON EXISTING PLANS, WHICH ARE AVAILABLE FOR INSPECTION AT THE CONNECTICUT DEPARTMENT OF TRANSPORTATION PLANS OFFICE, 160 PASCONE PLACE, NEWINGTON, CT. OPERATION AND MAINTENANCE MANUALS MAY BE FOUND AT BRIDGE DEPARTMENT, 44 BANNER DRIVE, MILFORD, CT. USE OF EXISTING PLANS IS AT THE CONTRACTOR'S RISK. THE CONTRACTOR SHALL FIELD VERIFY LOCATIONS, DIMENSIONS, AND ELEVATIONS WHICH CAN AFFECT THE SATISFACTORY COMPLETION OF THE PROPOSED WORK. SUCH FIELD VERIFICATION SHALL BE PERFORMED BEFORE SHOP DRAWINGS ARE SUBMITTED.

FINISHED ELEVATIONS:
UPON COMPLETION OF THE CONSTRUCTION THE FINAL ROADWAY AND SIDEWALK GRADES MUST MATCH WITH THOSE EXISTING. TO ENSURE THIS, THE CONTRACTOR WILL SURVEY THE EXISTING GRADES AND SHOW THAT SURVEYS MADE AFTER COMPLETION OF WORK DEMONSTRATE THAT ORIGINAL GRADES WERE ACHIEVED.

TRAFFIC:
ALL WORK SHALL BE DONE IN ACCORDANCE WITH THE TRAFFIC SUBSET, AND THE SPECIAL PROVISIONS "MAINTENANCE AND PROTECTION OF TRAFFIC" & "PROSECUTION AND PROGRESS."

UTILITIES:
THE CONTRACTOR SHALL TAKE THE PROPER PRECAUTIONS TO ENSURE THERE WILL BE NO DISRUPTION OF EXISTING UTILITIES WHILE COMPLETING THE REQUIRED WORK.

SALVAGE:
NONE

LOAD RESTRICTIONS:
AT NO TIME DURING CONSTRUCTION AND STEEL REPAIR OPERATIONS SHALL MATERIALS OR EQUIPMENT BE ALLOWED TO BE STOCKPILED OR STORED EXCEPT IN THE APPROVED STAGING AREA.

CONCRETE NOTES:

CLASS "S" CONCRETE: CLASS "S" CONCRETE SHALL BE USED FOR BRIDGE SUBSTRUCTURE REPAIRS.

VARIABLE DEPTH PATCH: VARIABLE DEPTH PATCH SHALL BE USED FOR PRECAST CONCRETE BEAM REPAIRS (SEE SPECIAL PROVISIONS).

FULL DEPTH PATCH (HIGH EARLY STRENGTH CONCRETE): SEE SPECIAL PROVISIONS.

PARTIAL DEPTH PATCH: SEE SPECIAL PROVISIONS.

JOINT SEAL: SEE SPECIAL PROVISIONS.

EXPOSED EDGES:
EXPOSED EDGES OF CONCRETE SHALL BE BEVELED 1" X 1" UNLESS DIMENSIONED OTHERWISE.

CONCRETE COVER:
REINFORCEMENT SHALL HAVE TWO INCHES OF COVER, WHERE POSSIBLE, UNLESS DIMENSIONED OTHERWISE.

REINFORCEMENT:
ALL REINFORCEMENT SHALL BE ASTM A615 GRADE 60.

CONSTRUCTION JOINTS:
CONSTRUCTION JOINTS, OTHER THAN THOSE SHOWN ON THE PLANS, WILL NOT BE PERMITTED WITHOUT THE PRIOR APPROVAL OF THE ENGINEER.

THIN POLYMER (EPOXY) OVERLAY: THIN POLYMER OVERLAY SHALL BE USED ON TOP OF GALVANIZED STEEL GRID DECK (SEE SPECIAL PROVISIONS).

NOTES:

THE CONTRACTOR'S ATTENTION IS DIRECTED TO THE FACT THAT DUE TO THE NATURE OF REHABILITATION PROJECTS, THE EXACT EXTENT OF REHABILITATION WORK CANNOT ALWAYS BE ACCURATELY DETERMINED PRIOR TO THE COMMENCEMENT OF WORK. THESE PLANS HAVE BEEN PREPARED BASED ON LIMITED FIELD INVESTIGATIONS AND BRIDGE INSPECTION REPORTS (DATED 06/28/2016 AND 05/06/2016), AVAILABLE AT THE TIME. THE ACTUAL FIELD CONDITIONS MAY VARY AND MAY REQUIRE MODIFICATIONS TO CONSTRUCTION DETAILS AND WORK QUANTITIES. THE CONTRACTOR SHALL PERFORM ALL WORK IN ACCORDANCE WITH FIELD CONDITIONS AND AS DIRECTED BY THE ENGINEER.

THE CONTRACTOR IS CAUTIONED THAT HE ONLY WILL BE PERMITTED TO PERFORM SOME OF THE WORK WHILE ENSURING THAT TRAVEL LANES ARE OPEN TO TRAFFIC IN ACCORDANCE WITH THE SPECIAL PROVISION, "SECTION 1.08 - PROSECUTION AND PROGRESS" AND "MAINTENANCE AND PROTECTION OF TRAFFIC".

HYDRO-DEMOLITION DRAINAGE RUNOFF CONTROL SHALL BE DESIGN BY THE CONTRACTOR AND APPROVED BY THE ENGINEER (SEE "PARTIAL DEPTH PATCH" SPECIAL PROVISION).

CONSTRUCTION OPERATIONS SHALL BE COORDINATED BY THE CONTRACTOR WITH APPROPRIATE UTILITY COMPANIES, AND SHALL BE PERFORMED AS DIRECTED BY THE ENGINEER. SEE SPECIAL PROVISIONS "PROSECUTION AND PROGRESS" FOR LIMITATION OF CONTRACTOR'S OPERATIONS.

SCAFFOLDING USED FOR STEEL REPAIR SHALL BE INCLUDED FOR PAYMENT UNDER THE ITEM "REHABILITATION OF EXISTING STRUCTURAL STEEL" SEE SPECIAL PROVISIONS.

ANY MEANS OF ACCESS TO THE STRUCTURE BY TRACKED MACHINERY OR OTHERWISE, THAT MAY RESULT IN DISTURBANCE TO THE EXISTING SOIL, IS NOT PERMITTED WITHOUT APPROVAL OF THE ENGINEER. THE CONTRACTOR IS NOT PERMITTED TO PERFORM WORK IN, NOR GAIN ACCESS THROUGH, ANY EXISTING WETLAND AREA.

NOTICES TO CONTRACTOR:

1. STRUCTURAL WORK THAT INCREASES LEAF IMBALANCE BY MORE THAN 200 KIP-FT NEEDS TO BE COMPENSATED WITH COUNTERWEIGHT IF LEAF NEEDS TO BE OPERATED. LEAF MUST ALWAYS REMAIN SPAN HEAVY FOR SAFETY.
2. THE CONTRACTOR SHALL PROVIDE A SAFE ACCESS FOR THE ENGINEER TO DELINEATE AND REVIEW THE REPAIR WORK. THE COST OF PROVIDING ACCESS SHALL BE INCLUDED IN THE COST OF APPROPRIATE REPAIR ITEMS.

NOTICE TO BRIDGE INSPECTORS

THE DEPARTMENT'S BRIDGE SAFETY PROCEDURES REQUIRE THIS BRIDGE TO BE INSPECTED FOR, BUT NOT LIMITED TO, ALL APPLICABLE COMPONENTS INDICATED IN THE GOVERNING MANUALS FOR BRIDGE INSPECTION. ATTENTION MUST BE GIVEN TO INSPECTING THE FOLLOWING SPECIAL COMPONENTS AND DETAILS. (THE LISTING OF COMPONENTS FOR SPECIFIC ATTENTION SHALL NOT BE CONSTRUED TO REDUCE THE IMPORTANCE OF INSPECTION OF ANY OTHER COMPONENT OF THE STRUCTURE). THE FREQUENCY OF INSPECTION OF THIS STRUCTURE SHALL BE IN ACCORDANCE WITH THE GOVERNING MANUALS FOR BRIDGE INSPECTION, UNLESS OTHERWISE DIRECTED BY THE MANAGER OF BRIDGE SAFETY AND EVALUATION.

COMPONENT OR DETAIL	STRUCTURE SHEET REFERENCE
FOLLOW NORMAL INSPECTION PROCEDURES	--

REV.	DATE	REVISION DESCRIPTION	SHEET NO.

THE INFORMATION, INCLUDING ESTIMATED QUANTITIES OF WORK, SHOWN ON THESE SHEETS IS BASED ON LIMITED INVESTIGATIONS BY THE STATE AND IS IN NO WAY WARRANTED TO INDICATE THE CONDITIONS OF ACTUAL QUANTITIES OF WORK WHICH WILL BE REQUIRED.

Plotted Date: 9/25/2018

DESIGNER/DRAFTER: B.A./S.C.
CHECKED BY: J.H.M. II
SCALE AS NOTED

STATE OF CONNECTICUT
DEPARTMENT OF TRANSPORTATION

Filename: ...\SB_MSH_173_462_BR02295_S-04_GENERAL NOTES.dgn

SIGNATURE/BLOCK:
Close, Jensen and Miller, P.C.
1137 Silas Deane Highway
Wethersfield, CT 06109

PROJECT TITLE:
REHABILITATION OF BRIDGE
NO. 02295, ROUTE 136
OVER NORWALK RIVER

TOWN: NORWALK

DRAWING TITLE: GENERAL NOTES

PROJECT NO. 173-462
DRAWING NO. S-04
SHEET NO. 03.04

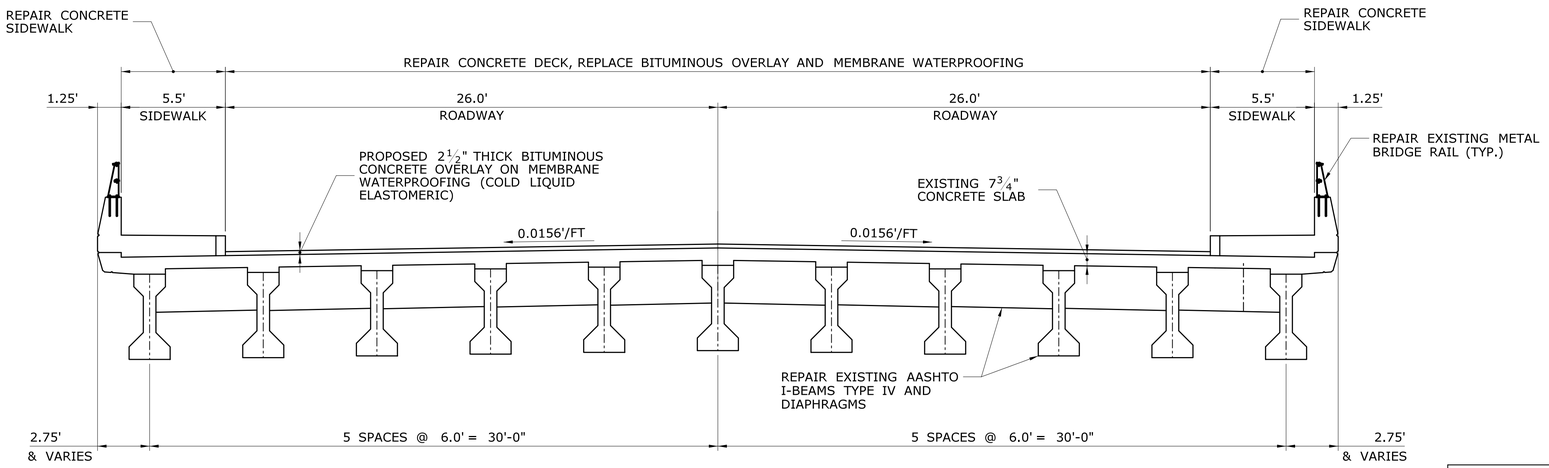

EXISTING CROSS SECTION (SPANS A-1, P-2 AND P-3)

SCALE: ¼" = 1'-0"

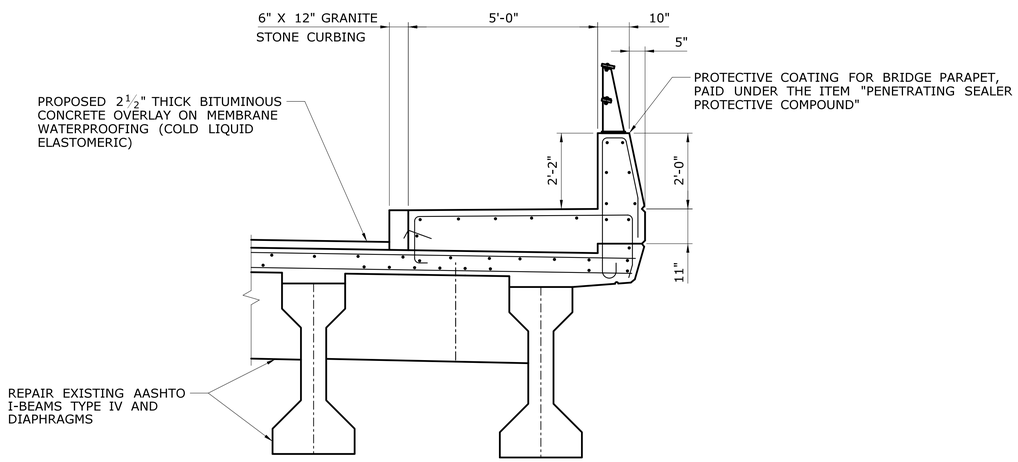

EXISTING SIDEWALK (SPANS A-1, P-2 AND P-3) (TYP.)

SCALE: ½" = 1'-0"

NOTES:

1. THE CONTRACTOR SHALL UNDERTAKE A SURVEY OF THE EXISTING METAL BRIDGE RAIL DEFICIENCY LOCATION PRIOR TO START OF ANY WORK. THE COST TO DO THE SURVEY IS INCLUDED IN THE ITEM "REPAIR METAL BRIDGE RAIL".
2. REPAIR OF CONCRETE SIDEWALK, IF REQUIRED, SHALL BE PAID FOR UNDER THE ITEM "PARTIAL DEPTH PATCH".

QUANTITIES

BRIDGE PAY ITEM	UNIT	QUANTITY
FURNISH AND INSTALL BIRD CONTROL SYSTEM	L.S.	L.S.
WATER RESCUE OPERATIONS	L.S.	L.S.
CUT BITUMINOUS CONCRETE PAVEMENT	L.F.	110
HMA S0.5	TON	4
HMA S0.375	TON	187
HMA S0.25	TON	125
MATERIAL FOR TACK COAT	GAL	2
REMOVAL OF EXISTING WEARING SURFACE	S.Y.	2190
EXTEND EXISTING WEEPHOLES	EA.	15
ASPHALTIC PLUG EXPANSION JOINT SYSTEM	C.F.	105
PREFORMED JOINT SEAL	L.F.	390
REPLACE JOINT SEAL	L.F.	485
CLASS "S" CONCRETE	C.Y.	1
VARIABLE DEPTH PATCH	C.F.	45
FULL DEPTH PATCH (HIGH EARLY STRENGTH CONCRETE)	C.Y.	4
PARTIAL DEPTH PATCH	C.F.	125
THIN POLYMER (EPOXY) OVERLAY	S.F.	8495
DEFORMED STEEL BARS - EPOXY COATED	LB.	30
DRILLING HOLES	EA.	895
CLEAN AND COAT EXPOSED REINFORCING STEEL	L.F.	310
REPAIR DEFECTIVE WELDS	L.F.	5
LOCALIZED PAINT REMOVAL AND FIELD PAINTING OF EXISTING STEEL	S.F.	435
REHABILITATION OF EXISTING STRUCTURAL STEEL	CWT.	70
FENDER SYSTEM	L.S.	L.S.
MEMBRANE WATERPROOFING (COLD LIQUID ELASTOMERIC)	S.Y.	2155
PENETRATING SEALER PROTECTIVE COMPOUND	S.Y.	585
REPAIR METAL BRIDGE RAIL	L.S.	L.S.

REV.	DATE	REVISION DESCRIPTION	SHEET NO.

THE INFORMATION, INCLUDING ESTIMATED QUANTITIES OF WORK, SHOWN ON THESE SHEETS IS BASED ON LIMITED INVESTIGATIONS BY THE STATE AND IS IN NO WAY WARRANTED TO INDICATE THE CONDITIONS OF ACTUAL QUANTITIES OF WORK WHICH WILL BE REQUIRED.

Plotted Date: 9/25/2018

DESIGNER/DRAFTER: B.A./S.C.
CHECKED BY: J.H.M. II
SCALE AS NOTED

STATE OF CONNECTICUT
DEPARTMENT OF TRANSPORTATION

Filename: ...\SB_MSH_173_462_BR02295_S-05_DECK_XSEC-1.dgn

SIGNATURE/BLOCK:
Close, Jensen and Miller, P.C.
1137 Silas Deane Highway
Wethersfield, CT 06109

PROJECT TITLE:
REHABILITATION OF BRIDGE NO. 02295, ROUTE 136 OVER NORWALK RIVER

TOWN: NORWALK

DRAWING TITLE: TYPICAL SECTION - 1

PROJECT NO. 173-462
DRAWING NO. S-05
SHEET NO. 03.05

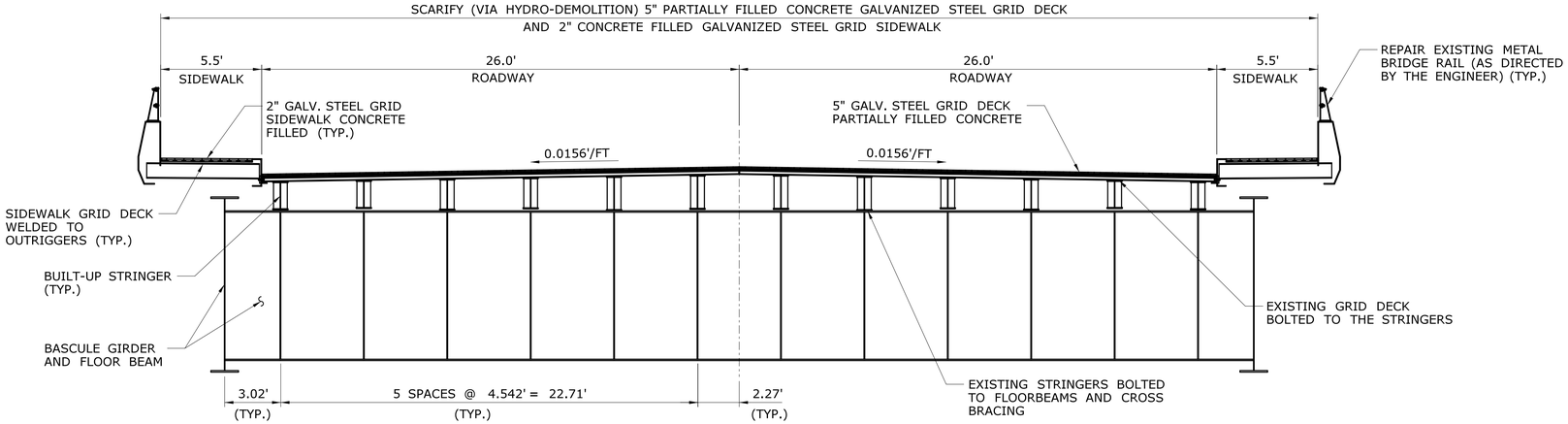

EXISTING CROSS SECTION (BASCULE SPAN P-1)

SCALE: 1/4" = 1'-0"

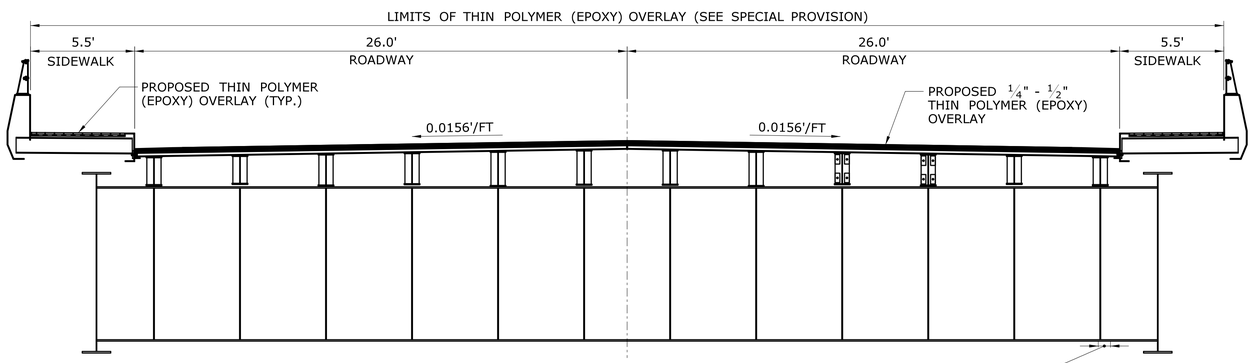

PROPOSED CROSS SECTION (BASCULE SPAN P-1)

SCALE: 1/4" = 1'-0"

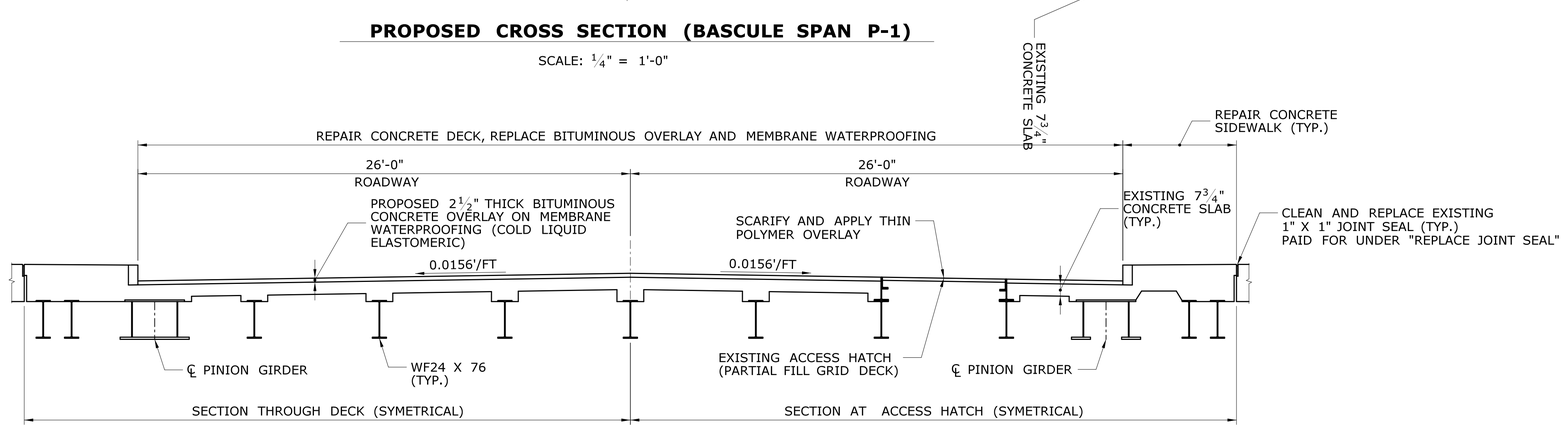

TYPICAL CROSS SECTION (BASCULE SPAN P-1 OVER COUNTERWEIGHT)

SCALE: 1/4" = 1'-0"

REV.	DATE	REVISION DESCRIPTION	SHEET NO.

THE INFORMATION, INCLUDING ESTIMATED QUANTITIES OF WORK, SHOWN ON THESE SHEETS IS BASED ON LIMITED INVESTIGATIONS BY THE STATE AND IS IN NO WAY WARRANTED TO INDICATE THE CONDITIONS OF ACTUAL QUANTITIES OF WORK WHICH WILL BE REQUIRED.

Plotted Date: 9/25/2018

DESIGNER/DRAFTER: **B.A./S.C.**

CHECKED BY: **J.H.M. II**

SCALE AS NOTED

STATE OF CONNECTICUT
DEPARTMENT OF TRANSPORTATION

Filename: ...\SB_MSH_173_462_BR02295_S-06_DECK_XSEC-2.dgn

SIGNATURE/ BLOCK:

Close, Jensen and Miller, P.C.
1137 Silas Deane Highway
Wethersfield, CT 06109

PROJECT TITLE:

REHABILITATION OF BRIDGE NO. 02295, ROUTE 136 OVER NORWALK RIVER

TOWN: **NORWALK**

DRAWING TITLE: **TYPICAL SECTION - 2**

PROJECT NO. **173-462**

DRAWING NO. **S-06**

SHEET NO. **03.06**

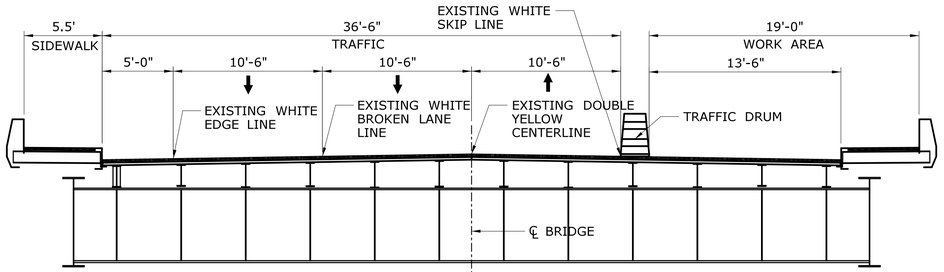

STAGE 1

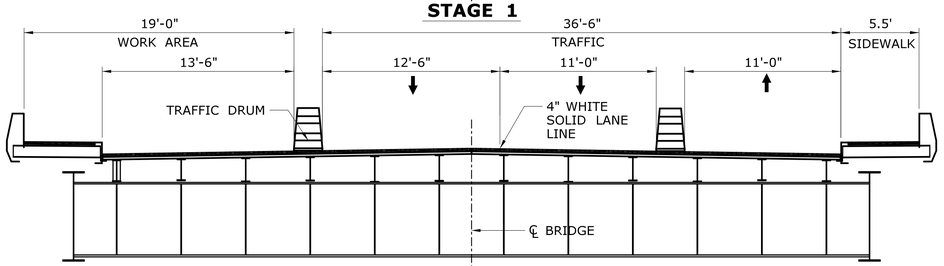

STAGE 2

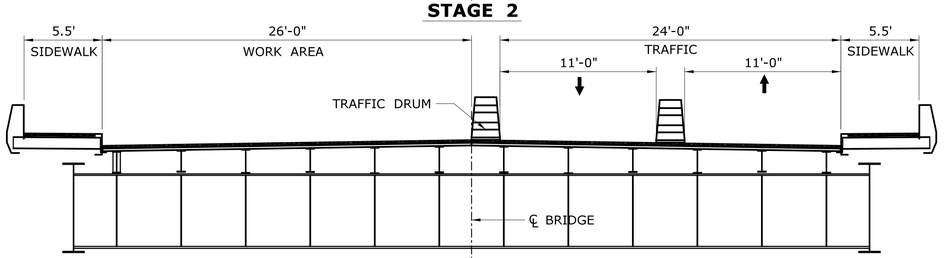

STAGE 3

(OFF-PEAK HOURS FOR STAGE 2)

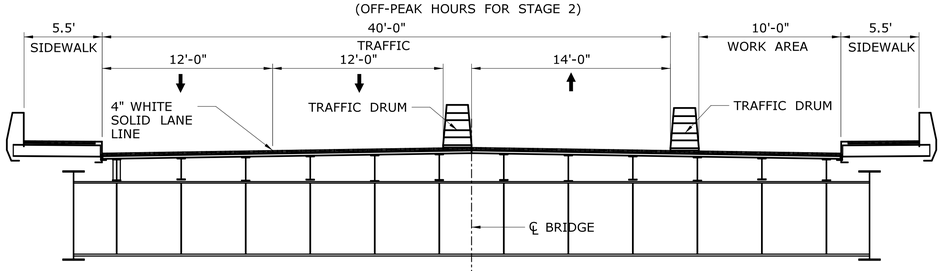

STAGE 4

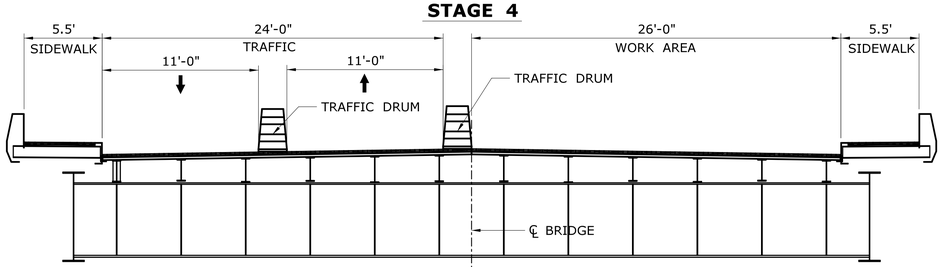

STAGE 5

(OFF-PEAK HOURS FOR STAGE 4)

NOTES:

1. STAGES 1, 2 AND 4 CAN BE UTILIZED AT ALL HOURS.
2. STAGES 3 AND 5 CAN BE UTILIZED DURING THE OFF-PEAK HOURS OF 9 AM TO 6 AM.
3. STAGE 1 WILL UTILIZE EXISTING PAVEMENT MARKINGS. LANES ARE LESS THAN 11' DUE TO BIKELANES BEING 5' WIDE.

DETOUR NOTE:

THE WORK REQUIRED TO FURNISH AND APPLY A TWO COURSE THIN POLYMER (EPOXY) OVERLAY ON THE SPAN P-1 (MOVABLE BRIDGE) DECK SURFACE SHALL TAKE PLACE DURING A FULL ROADWAY CLOSURE AND DETOUR OF ROUTE 136 IN ACCORDANCE WITH SECTION 1.08 OF THE CONTRACT DOCUMENTS. SEE TRAFFIC DETOUR PLANS IN THE TRAFFIC SUBSET. THIS WORK WILL REQUIRE COORDINATION WITH THE NAVIGATION CLOSURE RESTRICTIONS FOR THE MECHANICAL/ELECTRICAL WORK ON THE BASCULE BRIDGE SPAN SHOWN IN THE RESPECTIVE SUBSETS.

REV.	DATE	REVISION DESCRIPTION	SHEET NO.

THE INFORMATION, INCLUDING ESTIMATED QUANTITIES OF WORK, SHOWN ON THESE SHEETS IS BASED ON LIMITED INVESTIGATIONS BY THE STATE AND IS IN NO WAY WARRANTED TO INDICATE THE CONDITIONS OF ACTUAL QUANTITIES OF WORK WHICH WILL BE REQUIRED.

Plotted Date: 9/25/2018

DESIGNER/DRAFTER: **B.A./S.C.**
CHECKED BY: **J.H.M. II**
SCALE: 3/16" = 1'-0"

STATE OF CONNECTICUT
DEPARTMENT OF TRANSPORTATION

Filename: ...\SB_MSH_173_462_BR02295_S-07_STAGE_CONSTR-1.dgn

SIGNATURE/BLOCK:
Close, Jensen and Miller, P.C.
1137 Silas Deane Highway
Wethersfield, CT 06109

PROJECT TITLE:
REHABILITATION OF BRIDGE NO. 02295, ROUTE 136 OVER NORWALK RIVER

TOWN: **NORWALK**

DRAWING TITLE: **CONSTRUCTION STAGES**

PROJECT NO. **173-462**
DRAWING NO. **S-07**
SHEET NO. **03.07**

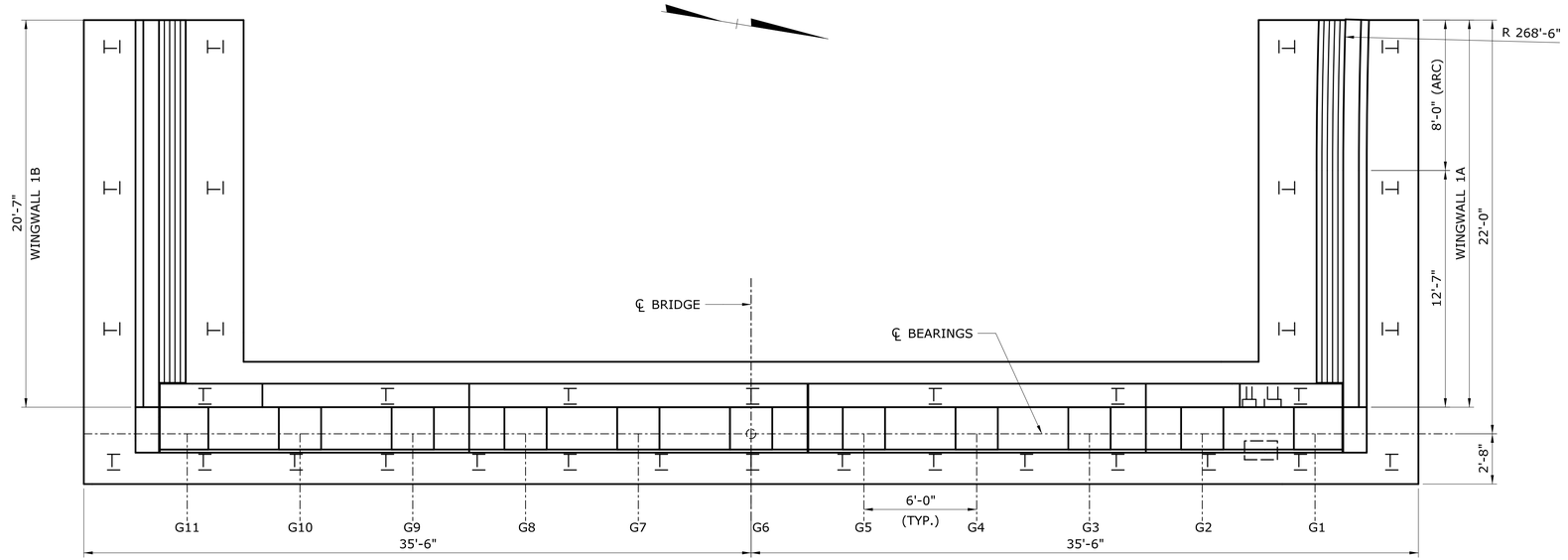

PLAN

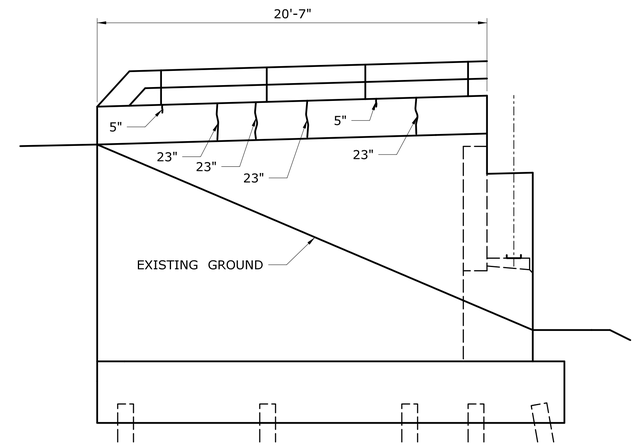

WINGWALL 1B ELEVATION

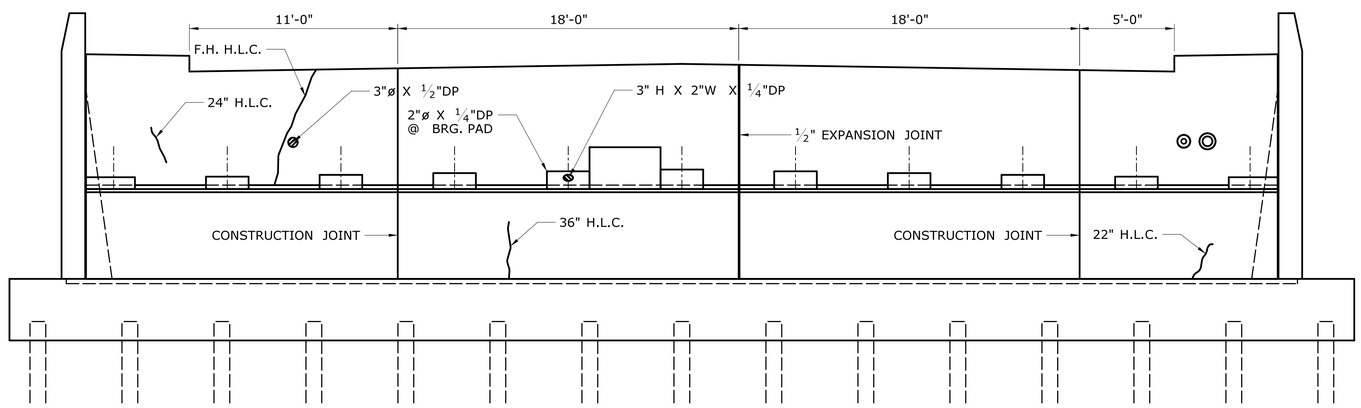

ELEVATION

FEMA 100 YR. FLOOD
(STILLWATER) EL. +10.4

HTL
+4.94

CJL
EL. 5.4

MHW
EL. +3.35

MLW
EL. -3.72

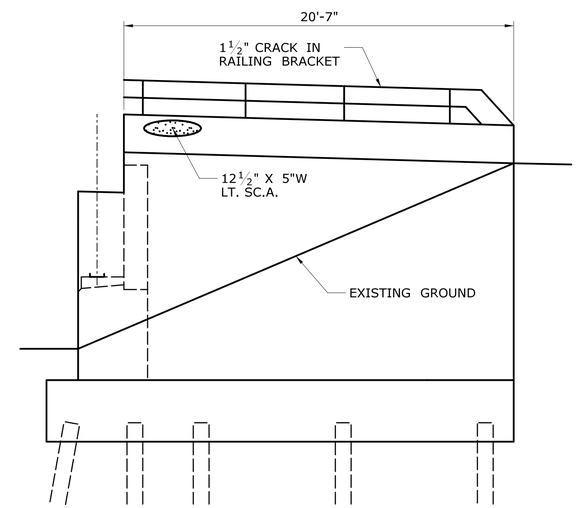

WINGWALL 1A ELEVATION

LEGEND

- CRACK (HAIRLINE UNLESS DIMENSIONED OTHERWISE) (H.L.C.)
- SPALL AREA WITH EXPOSED REINFORCING (S.A. W/E.R.)
- SPALL AREA (S.A.)
- HOLLOW AREA (H.A.)
- SHALLOW REBAR (SH. A.)
- HONEY COMB AREA (H.C.A.)
- SCALE AREA (SC. A.)
- MAP CRACKS (MPCR)
- EFFLORESCENCE (E)

REV.	DATE	REVISION DESCRIPTION	SHEET NO.

THE INFORMATION, INCLUDING ESTIMATED QUANTITIES OF WORK, SHOWN ON THESE SHEETS IS BASED ON LIMITED INVESTIGATIONS BY THE STATE AND IS IN NO WAY WARRANTED TO INDICATE THE CONDITIONS OF ACTUAL QUANTITIES OF WORK WHICH WILL BE REQUIRED.

Plotted Date: 9/25/2018

DESIGNER/DRAFTER: **B.A./S.C.**

CHECKED BY: **J.H.M. II**

SCALE: ¼" = 1'-0"

STATE OF CONNECTICUT
DEPARTMENT OF TRANSPORTATION

Filename: ...\SB_MSH_173_462_BR02295_S-08_ABUT-1.dgn

SIGNATURE/BLOCK:

Close, Jensen and Miller, P.C.
1137 Silas Deane Highway
Wethersfield, CT 06109

PROJECT TITLE:
REHABILITATION OF BRIDGE NO. 02295, ROUTE 136 OVER NORWALK RIVER

TOWN: **NORWALK**

DRAWING TITLE: **ABUTMENT NO. 1**

PROJECT NO. **173-462**

DRAWING NO. **S-08**

SHEET NO. **03.08**

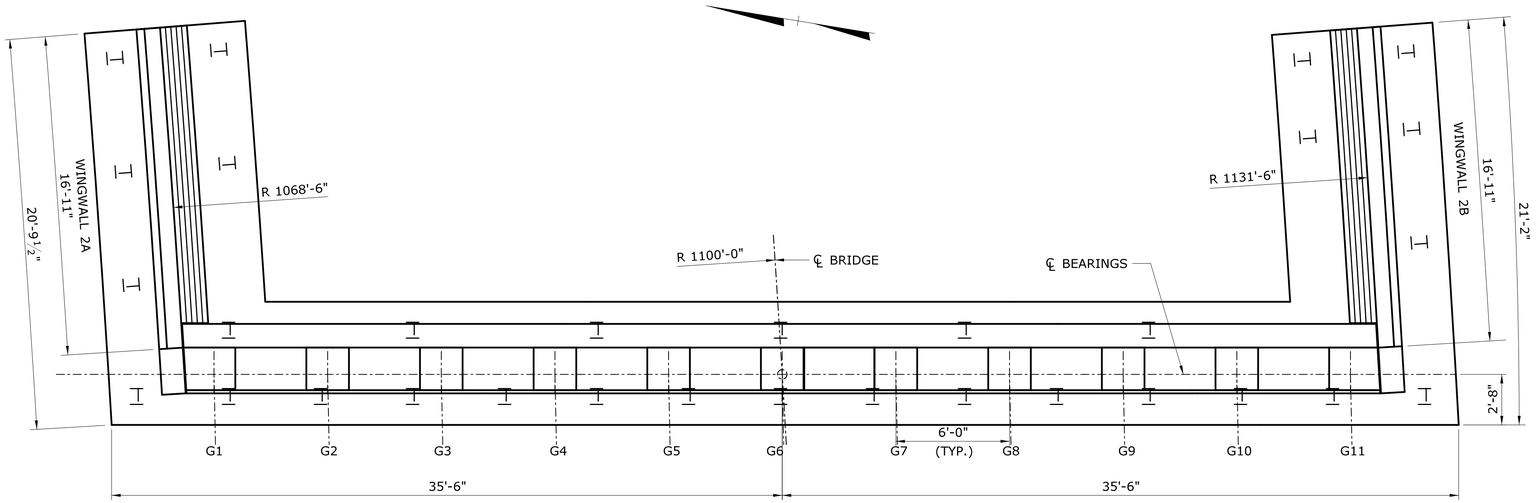

PLAN

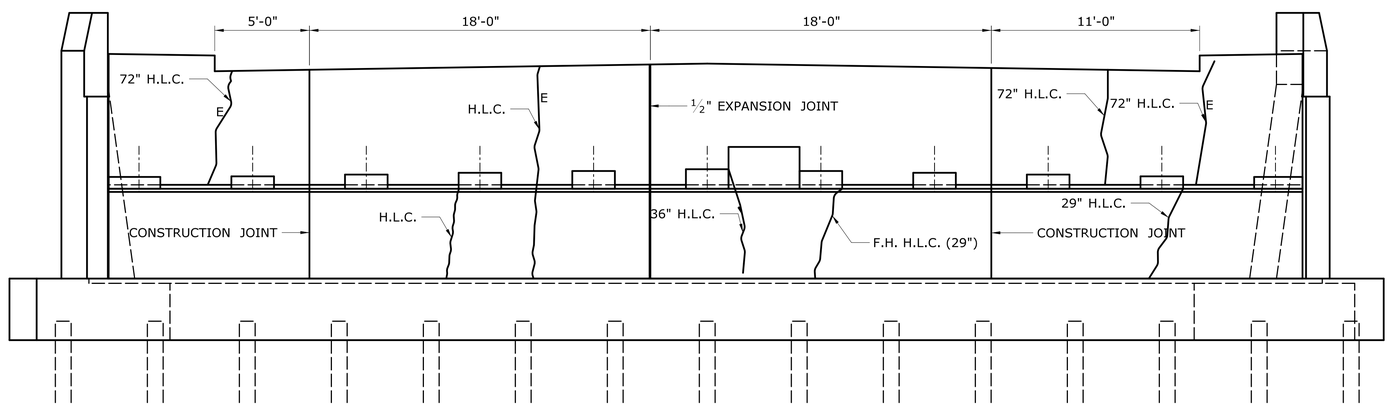

ELEVATION

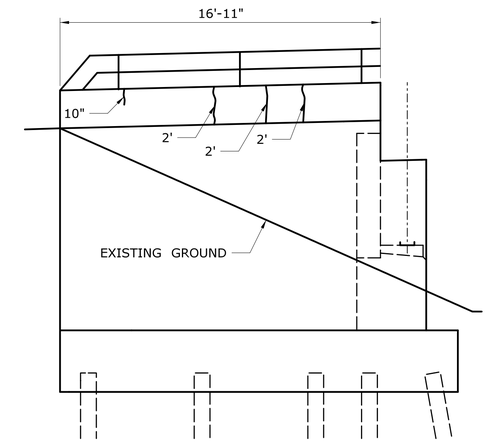

WINGWALL 2A

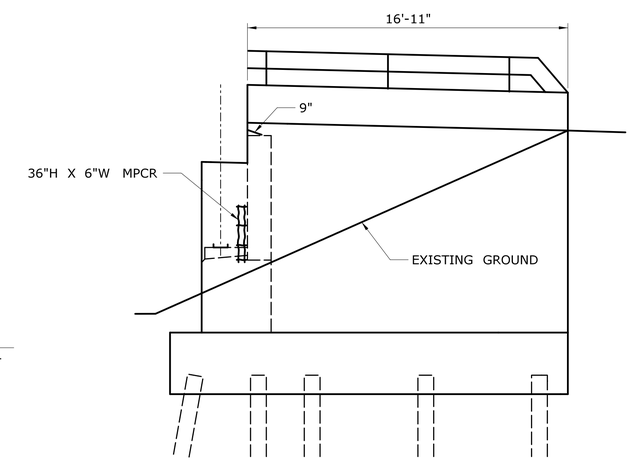

WINGWALL 2B

FEMA 100 YR. FLOOD
(STILLWATER) EL. +10.4

HTL
+4.94

CJL
EL. 5.4

MHW
EL. +3.35

MLW
EL. -3.72

LEGEND

- CRACK (HAIRLINE UNLESS DIMENSIONED OTHERWISE) (H.L.C.)
- SPALL AREA WITH EXPOSED REINFORCING (S.A. W/E.R.)
- SPALL AREA (S.A.)
- HOLLOW AREA (H.A.)
- SHALLOW REBAR (SH. A.)
- HONEY COMB AREA (H.C.A.)
- SCALE AREA (SC. A.)
- MAP CRACKS (MPCR)
- E EFFLORESCENCE (E)

KEY

F.H. = FULL HEIGHT

REV.	DATE	REVISION DESCRIPTION	SHEET NO.

THE INFORMATION, INCLUDING ESTIMATED QUANTITIES OF WORK, SHOWN ON THESE SHEETS IS BASED ON LIMITED INVESTIGATIONS BY THE STATE AND IS IN NO WAY WARRANTED TO INDICATE THE CONDITIONS OF ACTUAL QUANTITIES OF WORK WHICH WILL BE REQUIRED.

Plotted Date: 9/25/2018

DESIGNER/DRAFTER: B.A./S.C.
CHECKED BY: J.H.M. II
SCALE: ¼" = 1'-0"

STATE OF CONNECTICUT
DEPARTMENT OF TRANSPORTATION

Filename: ...\SB_MSH_173_462_BR02295_S-09_ABUT-2.dgn

SIGNATURE/BLOCK:
Close, Jensen and Miller, P.C.
1137 Silas Deane Highway
Wethersfield, CT 06109

PROJECT TITLE:
REHABILITATION OF BRIDGE NO. 02295, ROUTE 136 OVER NORWALK RIVER

TOWN: **NORWALK**

DRAWING TITLE: **ABUTMENT NO. 2**

PROJECT NO. 173-462
DRAWING NO. S-09
SHEET NO. 03.09

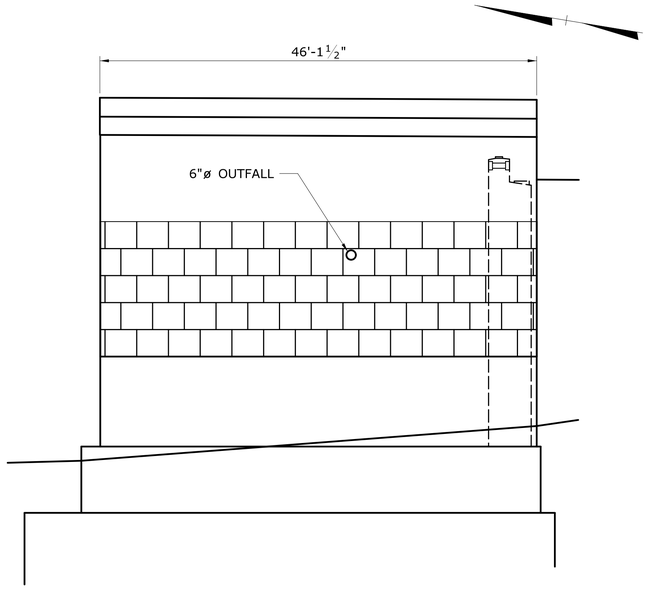

NORTH ELEVATION

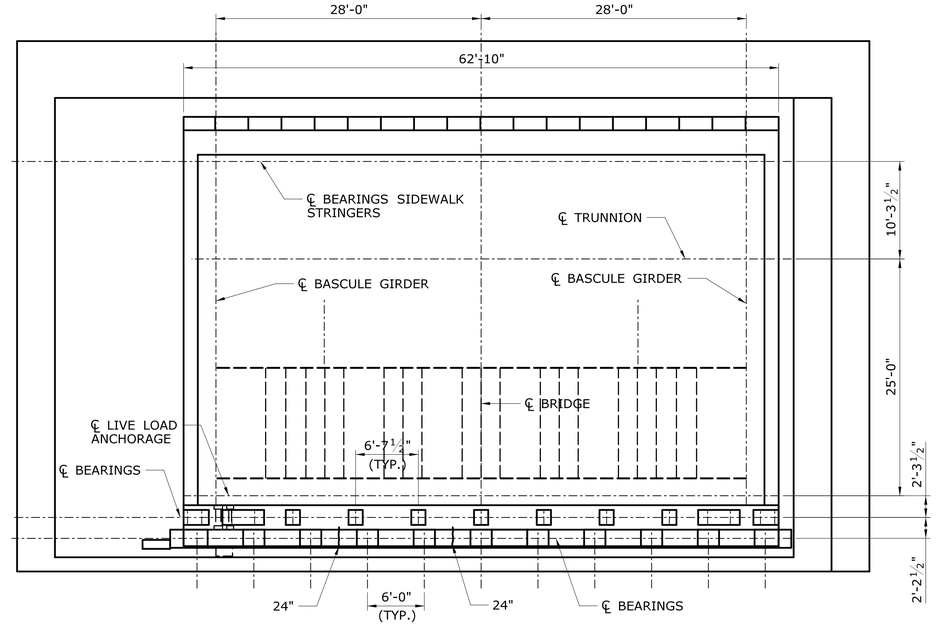

PLAN

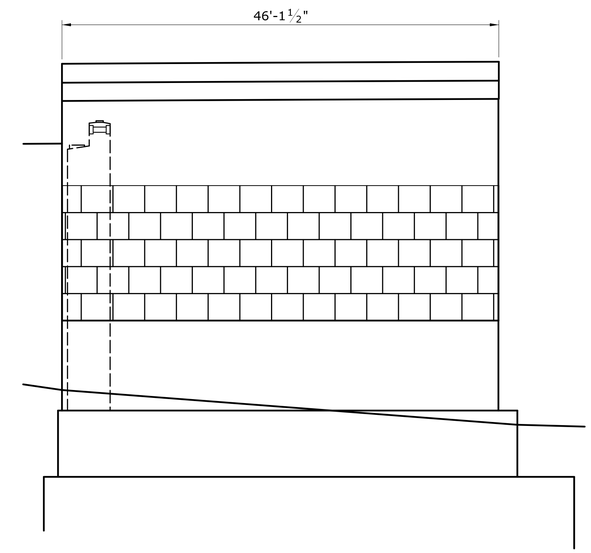

SOUTH ELEVATION

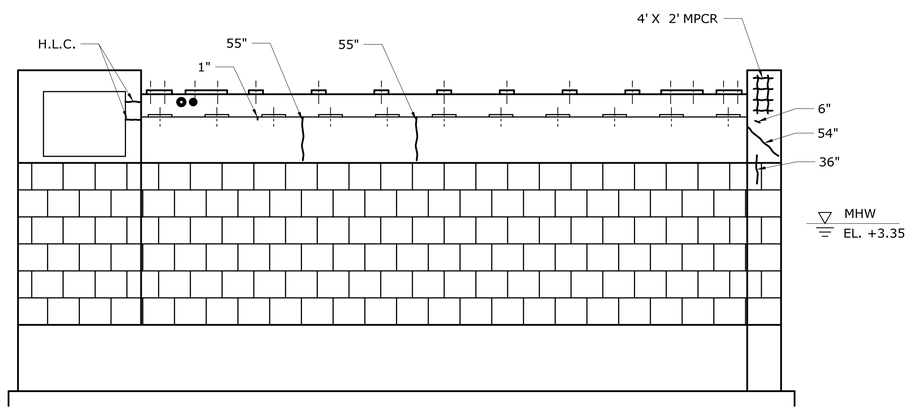

WEST ELEVATION

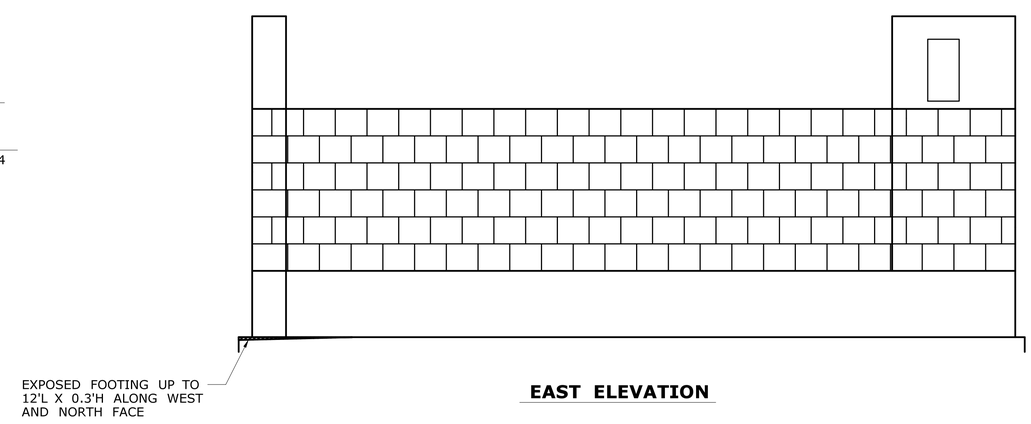

EAST ELEVATION

LEGEND

- CRACK (HAIRLINE UNLESS DIMENSIONED OTHERWISE) (H.L.C.)
- SPALL AREA WITH EXPOSED REINFORCING (S.A. W/E.R.)
- SPALL AREA (S.A.)
- HOLLOW AREA (H.A.)
- SHALLOW REBAR (SH. A.)
- HONEY COMB AREA (H.C.A.)
- SCALE AREA (SC. A.)
- MAP CRACKS (MPCR)
- E EFFLORESCENCE (E)

REV.	DATE	REVISION DESCRIPTION	SHEET NO.

THE INFORMATION, INCLUDING ESTIMATED QUANTITIES OF WORK, SHOWN ON THESE SHEETS IS BASED ON LIMITED INVESTIGATIONS BY THE STATE AND IS IN NO WAY WARRANTED TO INDICATE THE CONDITIONS OF ACTUAL QUANTITIES OF WORK WHICH WILL BE REQUIRED.

Plotted Date: 9/25/2018

DESIGNER/DRAFTER: B.A./S.C.
CHECKED BY: J.H.M. II
SCALE: ⅛" = 1'-0"

STATE OF CONNECTICUT
DEPARTMENT OF TRANSPORTATION

Filename: ...\SB_MSH_173_462_BR02295_S-10_PIER-1.dgn

SIGNATURE/BLOCK:
Close, Jensen and Miller, P.C.
1137 Silas Deane Highway
Wethersfield, CT 06109

PROJECT TITLE:
REHABILITATION OF BRIDGE NO. 02295, ROUTE 136 OVER NORWALK RIVER

TOWN: **NORWALK**

DRAWING TITLE: **PIER NO. 1**

PROJECT NO. 173-462
DRAWING NO. S-10
SHEET NO. 03.10

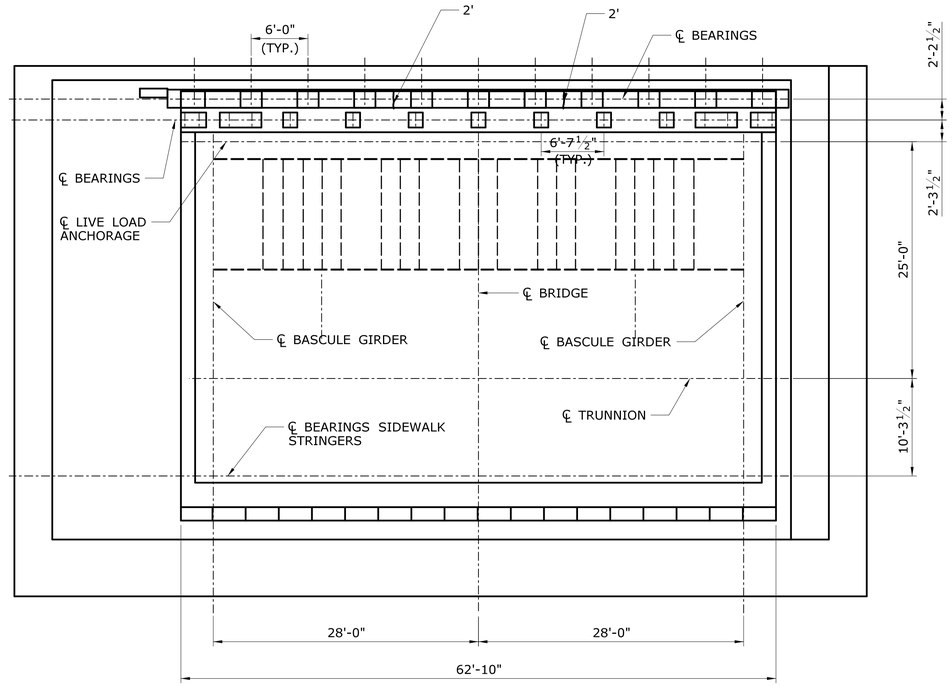

PLAN

LEGEND

- CRACK (HAIRLINE UNLESS DIMENSIONED OTHERWISE) (H.L.C.)
- SPALL AREA WITH EXPOSED REINFORCING (S.A. W/E.R.)
- SPALL AREA (S.A.)
- HOLLOW AREA (H.A.)
- SHALLOW REBAR (SH. A.)
- HONEY COMB AREA (H.C.A.)
- SCALE AREA (SC. A.)
- MAP CRACKS (MPCR)
- E EFFLORESCENCE (E)

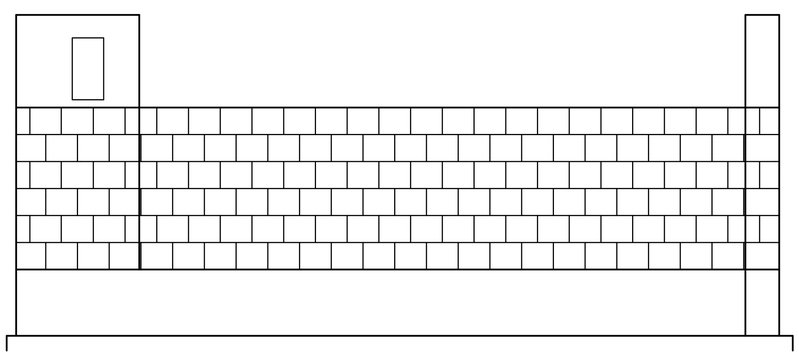

WEST ELEVATION

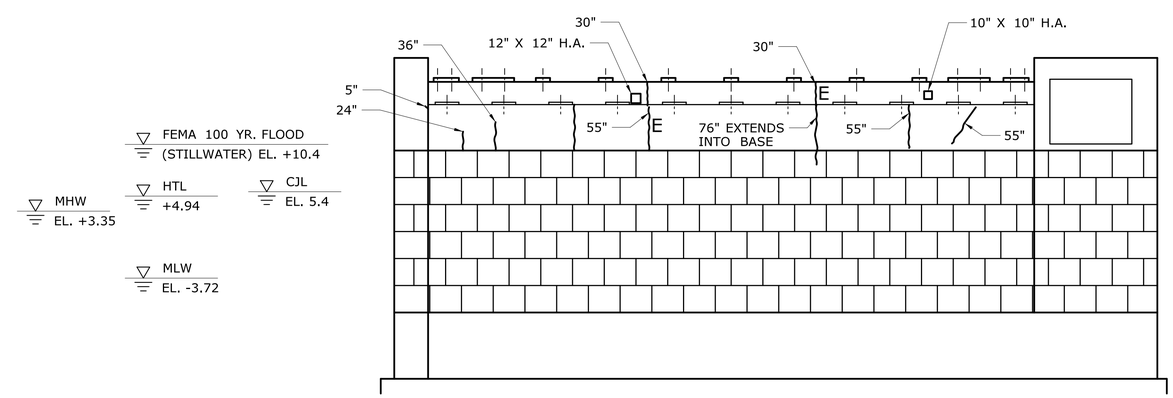

EAST ELEVATION

REV.	DATE	REVISION DESCRIPTION	SHEET NO.

THE INFORMATION, INCLUDING ESTIMATED QUANTITIES OF WORK, SHOWN ON THESE SHEETS IS BASED ON LIMITED INVESTIGATIONS BY THE STATE AND IS IN NO WAY WARRANTED TO INDICATE THE CONDITIONS OF ACTUAL QUANTITIES OF WORK WHICH WILL BE REQUIRED.

Plotted Date: 9/25/2018

DESIGNER/DRAFTER: **B.A./S.C.**

CHECKED BY: **J.H.M. II**

SCALE: 1/8" = 1'-0"

STATE OF CONNECTICUT
DEPARTMENT OF TRANSPORTATION

Filename: ...\SB_MSH_173_462_BR02295_S-11_PIER-2.dgn

SIGNATURE/ BLOCK:

Close, Jensen and Miller, P.C.
1137 Silas Deane Highway
Wethersfield, CT 06109

PROJECT TITLE:

REHABILITATION OF BRIDGE NO. 02295, ROUTE 136 OVER NORWALK RIVER

TOWN: **NORWALK**

DRAWING TITLE: **PIER NO. 2**

PROJECT NO. **173-462**

DRAWING NO. **S-11**

SHEET NO. **03.11**

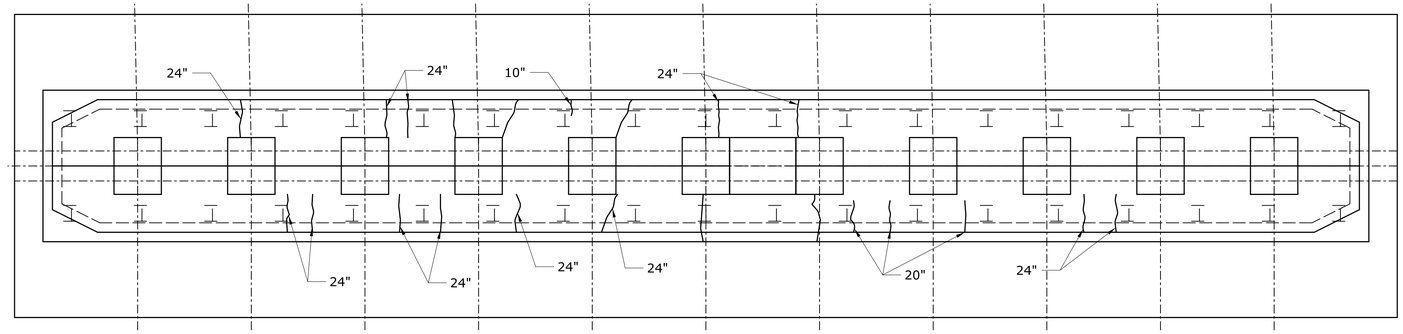

PLAN VIEW

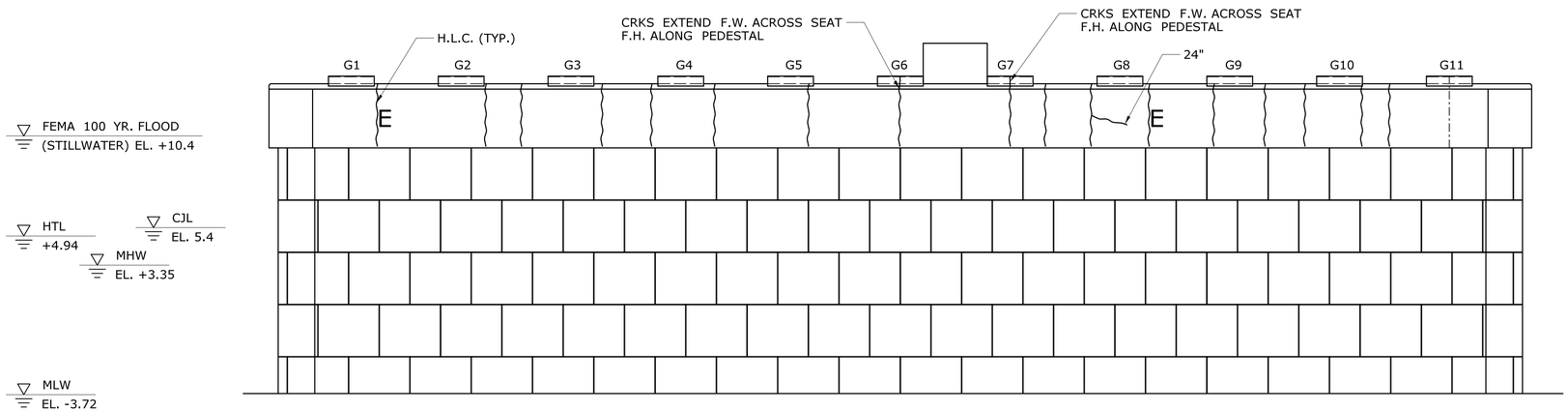

WEST ELEVATION

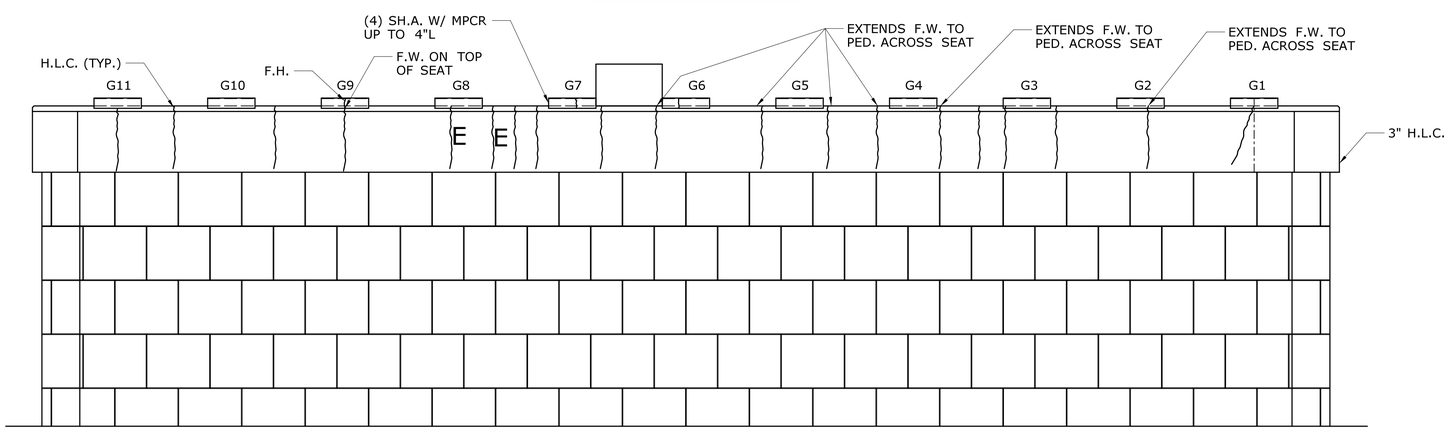

EAST ELEVATION

LEGEND

- CRACK (HAIRLINE UNLESS DIMENSIONED OTHERWISE) (H.L.C.)
- SPALL AREA WITH EXPOSED REINFORCING (S.A. W/E.R.)
- SPALL AREA (S.A.)
- HOLLOW AREA (H.A.)
- SHALLOW REBAR (SH. A.)
- HONEY COMB AREA (H.C.A.)
- SCALE AREA (SC. A.)
- MAP CRACKS (MPCR)
- E EFFLORESCENCE (E)

REV.	DATE	REVISION DESCRIPTION	SHEET NO.

THE INFORMATION, INCLUDING ESTIMATED QUANTITIES OF WORK, SHOWN ON THESE SHEETS IS BASED ON LIMITED INVESTIGATIONS BY THE STATE AND IS IN NO WAY WARRANTED TO INDICATE THE CONDITIONS OF ACTUAL QUANTITIES OF WORK WHICH WILL BE REQUIRED.

Plotted Date: 9/25/2018

DESIGNER/DRAFTER: **B.A./S.C.**

CHECKED BY: **J.H.M. II**

SCALE: 1/4" = 1'-0"

STATE OF CONNECTICUT
DEPARTMENT OF TRANSPORTATION

Filename: ..\SB_MSH_173_462_BR02295_S-12_PIER-3.dgn

SIGNATURE/ BLOCK:

Close, Jensen and Miller, P.C.
1137 Silas Deane Highway
Wethersfield, CT 06109

PROJECT TITLE:

REHABILITATION OF BRIDGE NO. 02295, ROUTE 136 OVER NORWALK RIVER

TOWN: **NORWALK**

DRAWING TITLE: **PIER NO. 3**

PROJECT NO. **173-462**

DRAWING NO. **S-12**

SHEET NO. **03.12**

CONCRETE SUBSTRUCTURE REPAIR NOTES:

1. UNLESS OTHERWISE DIRECTED BY THE ENGINEER, ALL SPALLS, INCLUDING CORNER RECONSTRUCTION, SHALL BE REPAIRED BY "CLASS 'S' CONCRETE", SEE SPECIAL PROVISION.
2. CONCRETE HOLLOW AREAS SHALL BE REMOVED TO SOUND CONCRETE.
3. AFTER CONCRETE REMOVAL, IF ANY OF THE REINFORCING STEEL IS EXPOSED, THE CONCRETE SHALL BE FURTHER REMOVED TO A DEPTH OF 1" BEHIND THE REINFORCING STEEL.
4. IF DURING REMOVAL OF DETERIORATED CONCRETE, THE CONTRACTOR DAMAGES EXISTING REINFORCEMENT TO THE EXTENT REQUIRING REPLACEMENT, ANY ADDITIONAL CONCRETE REMOVAL AND REPLACEMENT WITH PATCHING MATERIAL SHALL BE AT CONTRACTOR'S EXPENSE.
5. THE LOCATION AND EXTENT OF SUBSTRUCTURE DETERIORATION SHOWN ON THESE DRAWINGS IS BASED ON THE 2016 CT DOT BIENNIAL INSPECTION REPORT AND LIMITED FIELD INVESTIGATION. IT IS INTENDED TO BE USED AS A GUIDE AND DOES NOT NECESSARILY REFLECT THE CURRENT CONDITION OF THE STRUCTURE.
6. THE EXISTING STRUCTURE INFORMATION, INCLUDING DIMENSIONS SHOWN ON THESE DRAWINGS IS BASED ON ORIGINAL DESIGN DRAWINGS AND SUBSEQUENT REPAIR DRAWINGS AND IS NOT GUARANTEED.

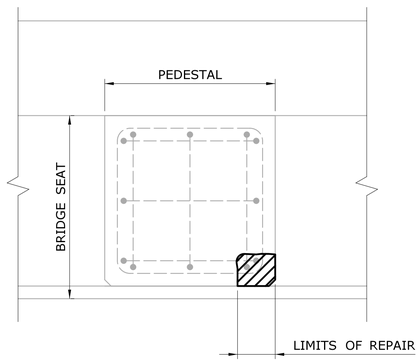

PLAN

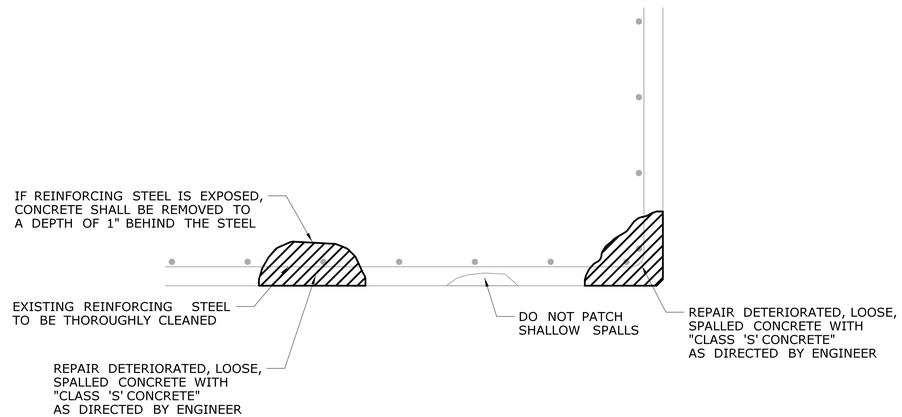

CONCRETE PATCHING FOR VERTICAL SURFACES

SCALE: 1" = 1'-0"

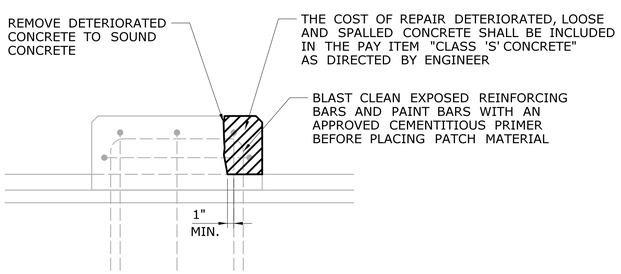

ELEVATION

CONCRETE BEARING PAD REPAIR DETAILS

SCALE: 1" = 1'-0"

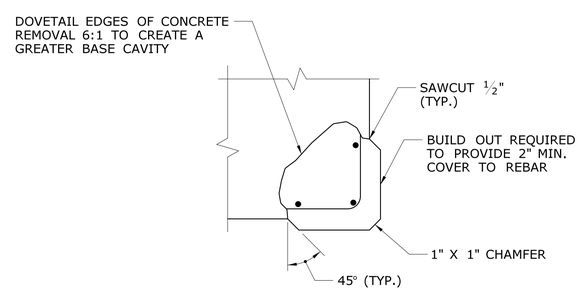

CORNER PATCH DETAIL WITH BUILD-OUT

N.T.S.

REV.	DATE	REVISION DESCRIPTION	SHEET NO.

THE INFORMATION, INCLUDING ESTIMATED QUANTITIES OF WORK, SHOWN ON THESE SHEETS IS BASED ON LIMITED INVESTIGATIONS BY THE STATE AND IS IN NO WAY WARRANTED TO INDICATE THE CONDITIONS OF ACTUAL QUANTITIES OF WORK WHICH WILL BE REQUIRED.

Plotted Date: 9/25/2018

DESIGNER/DRAFTER: B.A./S.C.
CHECKED BY: J.H.M. II
SCALE AS NOTED

STATE OF CONNECTICUT
DEPARTMENT OF TRANSPORTATION

Filename: ...\SB_MSH_173_462_BR02295_S-13_SUB_REPAIR.dgn

SIGNATURE/BLOCK:
Close, Jensen and Miller, P.C.
1137 Silas Deane Highway
Wethersfield, CT 06109

PROJECT TITLE:
REHABILITATION OF BRIDGE NO. 02295, ROUTE 136 OVER NORWALK RIVER

TOWN: **NORWALK**

DRAWING TITLE: **SUBSTRUCTURE REPAIR DETAILS**

PROJECT NO. 173-462
DRAWING NO. S-13
SHEET NO. 03.13

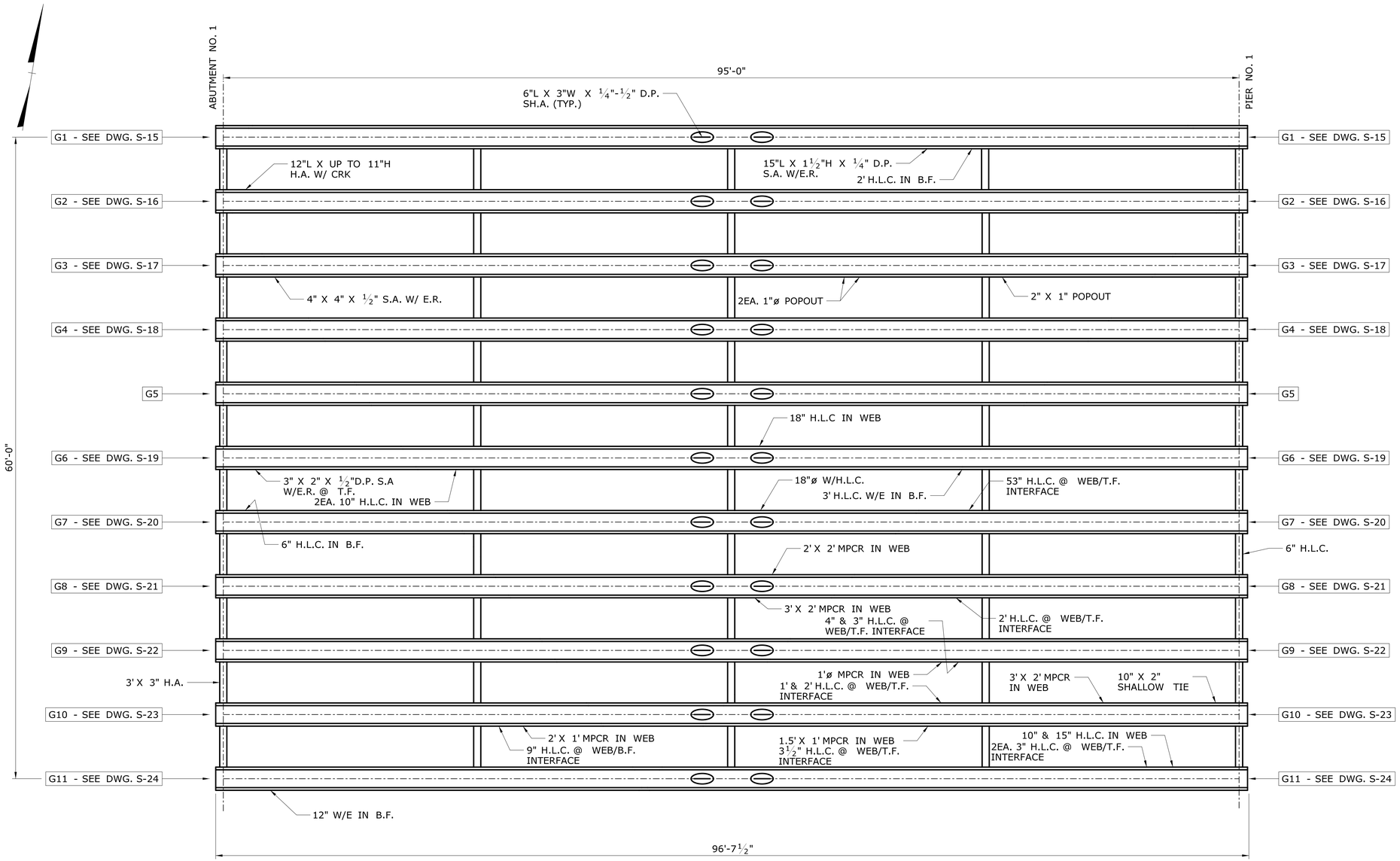

LEGEND

- CRACK (HAIRLINE UNLESS DIMENSIONED OTHERWISE) (H.L.C.)
- SPALL AREA WITH EXPOSED REINFORCING (S.A. W/E.R.)
- SPALL AREA (S.A.)
- HOLLOW AREA (H.A.)
- SHALLOW REBAR (SH. A.)
- HONEY COMB AREA (H.C.A.)
- SCALE AREA (SC. A.)
- MAP CRACKS (MPCR)
- E EFFLORESCENCE (E)

KEY

F.H. = FULL HEIGHT
F.W. = FULL WIDTH
F.L. = FULL LENGTH
D.P. = DEEP

T.F. = TOP FLANGE
B.F. = BOTTOM FLANGE
L.R. = LAMINAR RUST
S.L. = SECTION LOSS
NEG. = NEGLIGIBLE
VT. = VERTICAL

NOTE:

FOR NOTES AND BEAM REPAIR DETAILS SEE DWG. S-47.

SPAN A-1 FRAMING PLAN

REV.	DATE	REVISION DESCRIPTION	SHEET NO.

THE INFORMATION, INCLUDING ESTIMATED QUANTITIES OF WORK, SHOWN ON THESE SHEETS IS BASED ON LIMITED INVESTIGATIONS BY THE STATE AND IS IN NO WAY WARRANTED TO INDICATE THE CONDITIONS OF ACTUAL QUANTITIES OF WORK WHICH WILL BE REQUIRED.

Plotted Date: 9/25/2018

DESIGNER/DRAFTER: B.A./S.C.
CHECKED BY: J.H.M. II
SCALE: 3/16" = 1'-0"

STATE OF CONNECTICUT
DEPARTMENT OF TRANSPORTATION

Filename: ...\SB_MSH_173_462_BR02295_S-14_FRAM_SPAN-A-1.dgn

SIGNATURE/BLOCK:
Close, Jensen and Miller, P.C.
1137 Silas Deane Highway
Wethersfield, CT 06109

PROJECT TITLE:
REHABILITATION OF BRIDGE
NO. 02295, ROUTE 136
OVER NORWALK RIVER

TOWN: NORWALK

DRAWING TITLE: SPAN A-1 FRAMING PLAN

PROJECT NO. 173-462
DRAWING NO. S-14
SHEET NO. 03.14

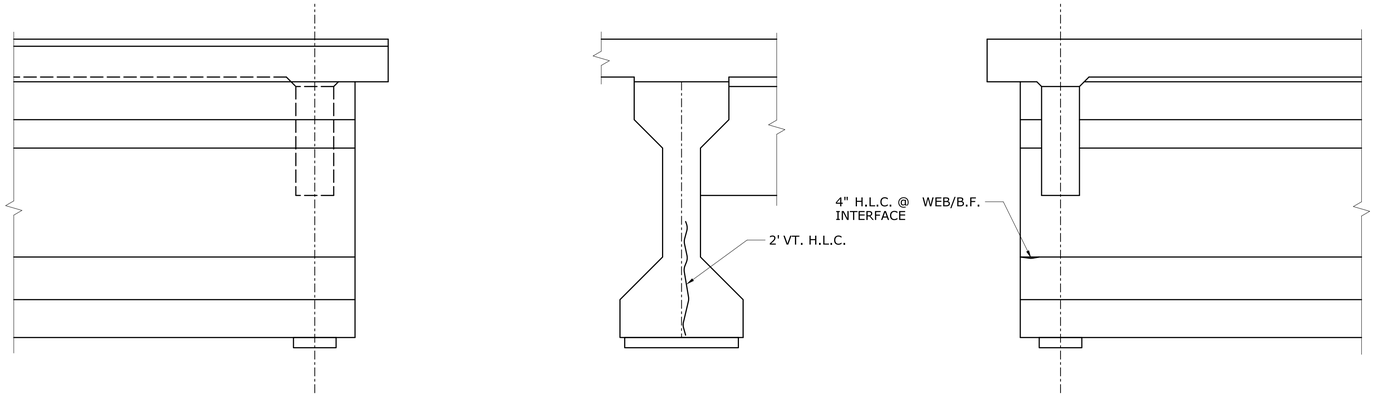

NORTH ELEVATION **BEAM END** **SOUTH ELEVATION**

EXISTING CONDITION ABUTMENT NO. 1 SPAN A-1 G1

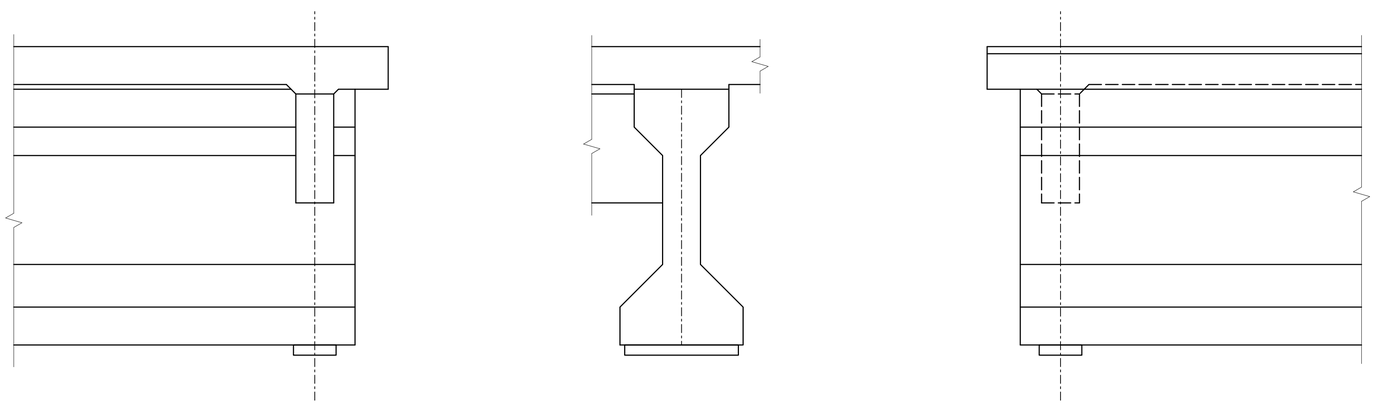

SOUTH ELEVATION **BEAM END** **NORTH ELEVATION**

EXISTING CONDITION PIER NO. 1 SPAN A-1 G1

NOTE:

FOR NOTES AND BEAM REPAIR DETAILS SEE DWG. S-47.

LEGEND

- CRACK (HAIRLINE UNLESS DIMENSIONED OTHERWISE) (H.L.C.)
- SPALL AREA WITH EXPOSED REINFORCING (S.A. W/E.R.)
- SPALL AREA (S.A.)
- HOLLOW AREA (H.A.)
- SHALLOW REBAR (SH. A.)
- HONEY COMB AREA (H.C.A.)
- SCALE AREA (SC. A.)
- MAP CRACKS (MPCR)
- E EFFLORESCENCE (E)

KEY

F.H. = FULL HEIGHT
F.W. = FULL WIDTH
F.L. = FULL LENGTH
D.P. = DEEP

T.F. = TOP FLANGE
B.F. = BOTTOM FLANGE
L.R. = LAMINAR RUST
S.L. = SECTION LOSS
NEG. = NEGLIGIBLE
VT. = VERTICAL
C.P. = CONCRETE PATCH

REV.	DATE	REVISION DESCRIPTION	SHEET NO.

THE INFORMATION, INCLUDING ESTIMATED QUANTITIES OF WORK, SHOWN ON THESE SHEETS IS BASED ON LIMITED INVESTIGATIONS BY THE STATE AND IS IN NO WAY WARRANTED TO INDICATE THE CONDITIONS OF ACTUAL QUANTITIES OF WORK WHICH WILL BE REQUIRED.

Plotted Date: 9/25/2018

DESIGNER/DRAFTER: B.A./S.C.
CHECKED BY: J.H.M. II
SCALE: 3/4" = 1'-0"

STATE OF CONNECTICUT
DEPARTMENT OF TRANSPORTATION

Filename: ...\SB_MSH_173_462_BR02295_S-15_BEAM_DETER-A1-G1.dgn

SIGNATURE/ BLOCK:
Close, Jensen and Miller, P.C.
1137 Silas Deane Highway
Wethersfield, CT 06109

PROJECT TITLE:
REHABILITATION OF BRIDGE NO. 02295, ROUTE 136 OVER NORWALK RIVER

TOWN: **NORWALK**

DRAWING TITLE: **SPAN A-1 G1 DETERIORATION**

PROJECT NO. 173-462
DRAWING NO. S-15
SHEET NO. 03.15

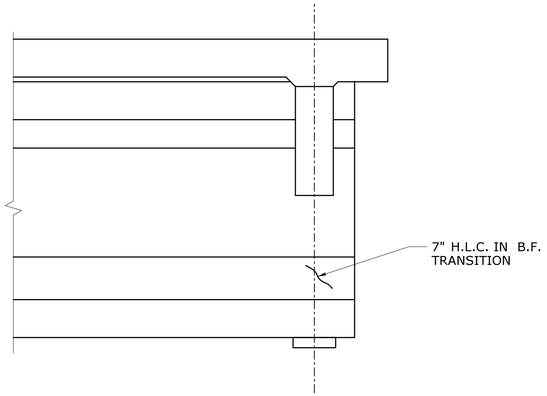

NORTH ELEVATION

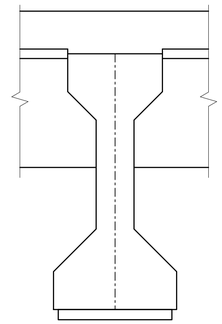

BEAM END

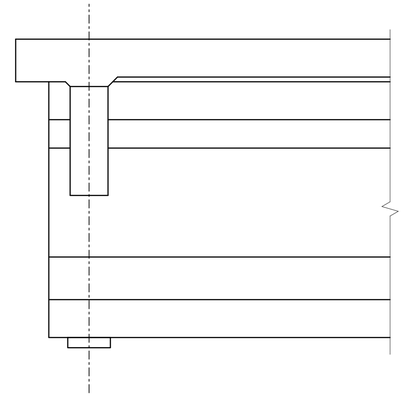

SOUTH ELEVATION

EXISTING CONDITION ABUTMENT NO. 1 SPAN A-1 G2

NOTE:

FOR NOTES AND BEAM REPAIR DETAILS SEE DWG. S-47.

LEGEND

- CRACK (HAIRLINE UNLESS DIMENSIONED OTHERWISE) (H.L.C.)
- SPALL AREA WITH EXPOSED REINFORCING (S.A. W/E.R.)
- SPALL AREA (S.A.)
- HOLLOW AREA (H.A.)
- SHALLOW REBAR (SH. A.)
- HONEY COMB AREA (H.C.A.)
- SCALE AREA (SC. A.)
- MAP CRACKS (MPCR)
- E EFFLORESCENCE (E)

KEY

F.H. = FULL HEIGHT
F.W. = FULL WIDTH
F.L. = FULL LENGTH
D.P. = DEEP

T.F. = TOP FLANGE
B.F. = BOTTOM FLANGE
L.R. = LAMINAR RUST
S.L. = SECTION LOSS
NEG. = NEGLIGIBLE
VT. = VERTICAL
C.P. = CONCRETE PATCH

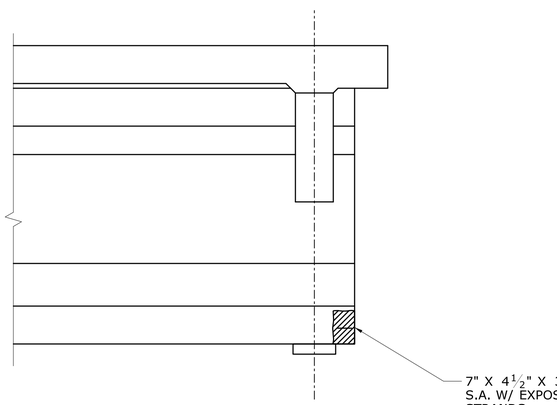

SOUTH ELEVATION

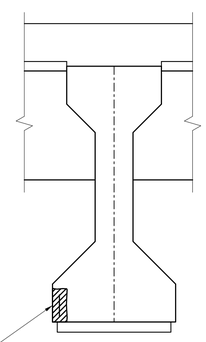

BEAM END

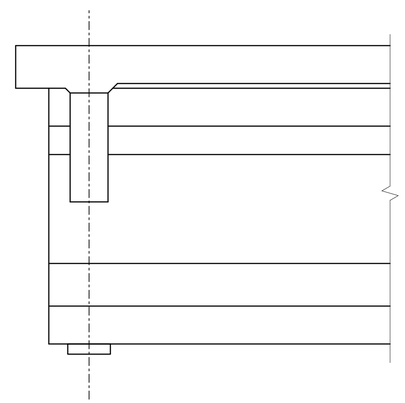

NORTH ELEVATION

EXISTING CONDITION PIER NO. 1 SPAN A-1 G2

REV.	DATE	REVISION DESCRIPTION	SHEET NO.

THE INFORMATION, INCLUDING ESTIMATED QUANTITIES OF WORK, SHOWN ON THESE SHEETS IS BASED ON LIMITED INVESTIGATIONS BY THE STATE AND IS IN NO WAY WARRANTED TO INDICATE THE CONDITIONS OF ACTUAL QUANTITIES OF WORK WHICH WILL BE REQUIRED.

Plotted Date: 9/25/2018

DESIGNER/DRAFTER: B.A./S.C.
CHECKED BY: J.H.M. II
SCALE: ¾" = 1'-0"

STATE OF CONNECTICUT
DEPARTMENT OF TRANSPORTATION

Filename: ...\SB_MSH_173_462_BR02295_S-16_BEAM_DETER-A1-G2.dgn

SIGNATURE/BLOCK:
Close, Jensen and Miller, P.C.
1137 Silas Deane Highway
Wethersfield, CT 06109

PROJECT TITLE:
REHABILITATION OF BRIDGE NO. 02295, ROUTE 136 OVER NORWALK RIVER

TOWN: **NORWALK**

DRAWING TITLE: **SPAN A-1 G2 DETERIORATION**

PROJECT NO. 173-462
DRAWING NO. S-16
SHEET NO. 03.16

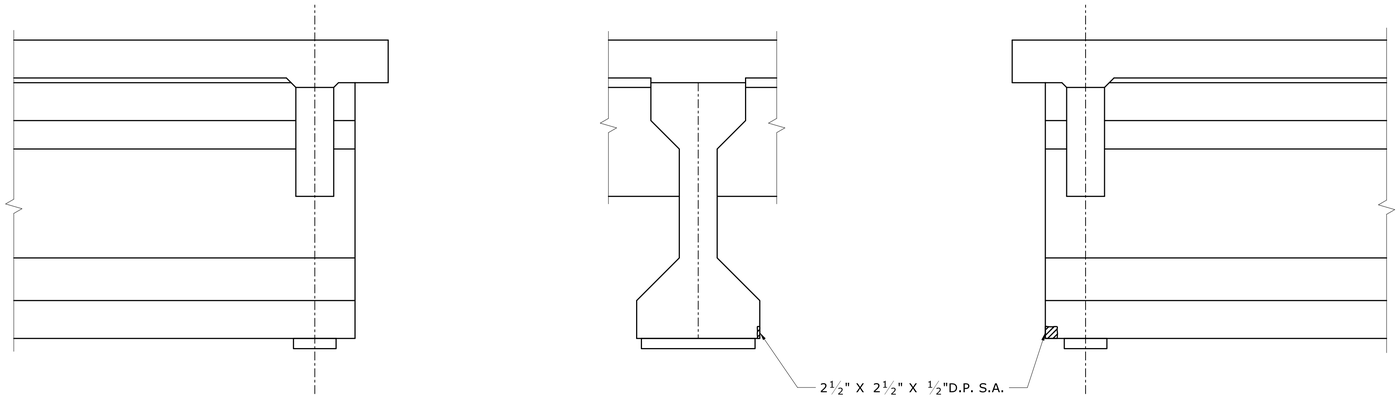

NORTH ELEVATION **BEAM END** **SOUTH ELEVATION**

EXISTING CONDITION ABUTMENT NO. 1 SPAN A-1 G3

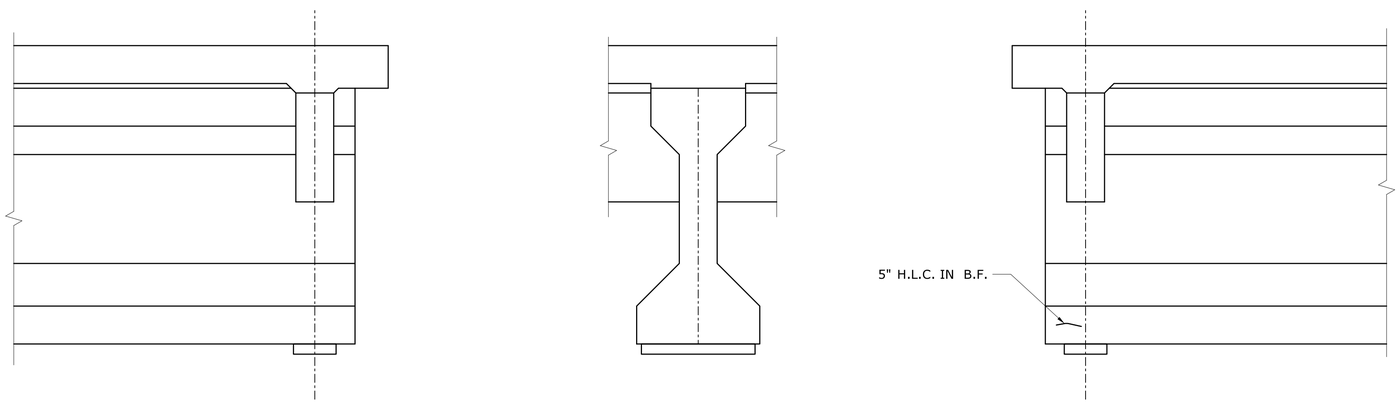

SOUTH ELEVATION **BEAM END** **NORTH ELEVATION**

EXISTING CONDITION PIER NO. 1 SPAN A-1 G3

NOTE:

FOR NOTES AND BEAM REPAIR DETAILS SEE DWG. S-47.

LEGEND

- CRACK (HAIRLINE UNLESS DIMENSIONED OTHERWISE) (H.L.C.)
- SPALL AREA WITH EXPOSED REINFORCING (S.A. W/E.R.)
- SPALL AREA (S.A.)
- HOLLOW AREA (H.A.)
- SHALLOW REBAR (SH. A.)
- HONEY COMB AREA (H.C.A.)
- SCALE AREA (SC. A.)
- MAP CRACKS (MPCR)
- E EFFLORESCENCE (E)

KEY

F.H. = FULL HEIGHT
F.W. = FULL WIDTH
F.L. = FULL LENGTH
D.P. = DEEP

T.F. = TOP FLANGE
B.F. = BOTTOM FLANGE
L.R. = LAMINAR RUST
S.L. = SECTION LOSS
NEG. = NEGLIGIBLE
VT. = VERTICAL
C.P. = CONCRETE PATCH

REV.	DATE	REVISION DESCRIPTION	SHEET NO.

THE INFORMATION, INCLUDING ESTIMATED QUANTITIES OF WORK, SHOWN ON THESE SHEETS IS BASED ON LIMITED INVESTIGATIONS BY THE STATE AND IS IN NO WAY WARRANTED TO INDICATE THE CONDITIONS OF ACTUAL QUANTITIES OF WORK WHICH WILL BE REQUIRED.

Plotted Date: 9/25/2018

DESIGNER/DRAFTER: B.A./S.C.
CHECKED BY: J.H.M. II
SCALE: 3/4" = 1'-0"

STATE OF CONNECTICUT
DEPARTMENT OF TRANSPORTATION

Filename: ...\SB_MSH_173_462_BR02295_S-17_BEAM_DETER-A1-G3.dgn

SIGNATURE/ BLOCK:
Close, Jensen and Miller, P.C.
1137 Silas Deane Highway
Wethersfield, CT 06109

PROJECT TITLE:
REHABILITATION OF BRIDGE NO. 02295, ROUTE 136 OVER NORWALK RIVER

TOWN: **NORWALK**

DRAWING TITLE: **SPAN A-1 G3 DETERIORATION**

PROJECT NO. 173-462
DRAWING NO. S-17
SHEET NO. 03.17

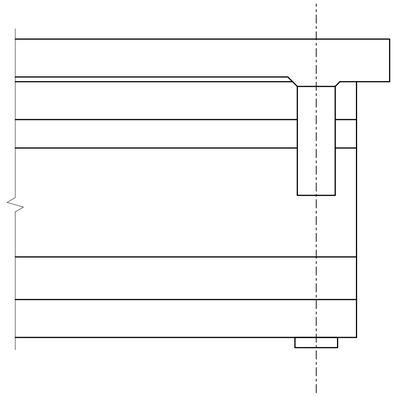

NORTH ELEVATION

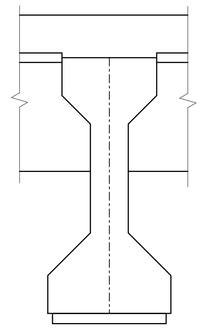

BEAM END

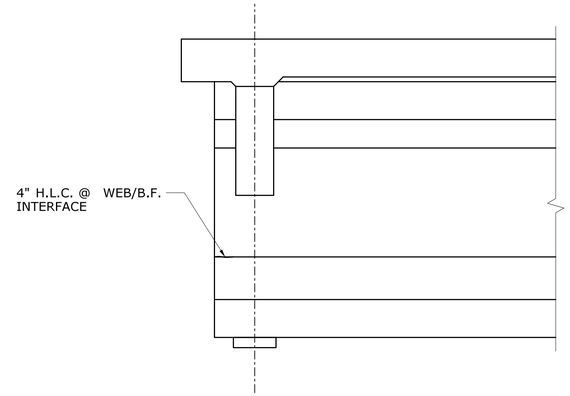

SOUTH ELEVATION

EXISTING CONDITION ABUTMENT NO. 1 SPAN A-1 G4

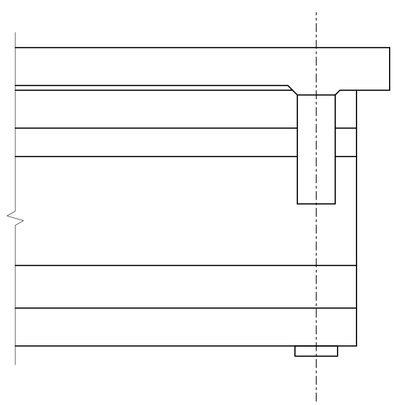

SOUTH ELEVATION

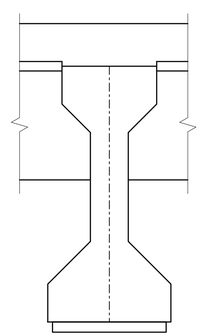

BEAM END

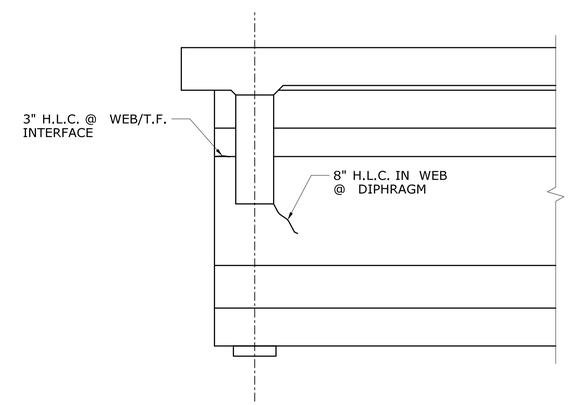

NORTH ELEVATION

EXISTING CONDITION PIER NO. 1 SPAN A-1 G4

NOTE:

FOR NOTES AND BEAM REPAIR DETAILS SEE DWG. S-47.

LEGEND

- CRACK (HAIRLINE UNLESS DIMENSIONED OTHERWISE) (H.L.C.)
- SPALL AREA WITH EXPOSED REINFORCING (S.A. W/E.R.)
- SPALL AREA (S.A.)
- HOLLOW AREA (H.A.)
- SHALLOW REBAR (SH. A.)
- HONEY COMB AREA (H.C.A.)
- SCALE AREA (SC. A.)
- MAP CRACKS (MPCR)
- E EFFLORESCENCE (E)

KEY

F.H. = FULL HEIGHT
F.W. = FULL WIDTH
F.L. = FULL LENGTH
D.P. = DEEP

T.F. = TOP FLANGE
B.F. = BOTTOM FLANGE
L.R. = LAMINAR RUST
S.L. = SECTION LOSS
NEG. = NEGLIGIBLE
VT. = VERTICAL
C.P. = CONCRETE PATCH

REV.	DATE	REVISION DESCRIPTION	SHEET NO.

THE INFORMATION, INCLUDING ESTIMATED QUANTITIES OF WORK, SHOWN ON THESE SHEETS IS BASED ON LIMITED INVESTIGATIONS BY THE STATE AND IS IN NO WAY WARRANTED TO INDICATE THE CONDITIONS OF ACTUAL QUANTITIES OF WORK WHICH WILL BE REQUIRED.

Plotted Date: 9/25/2018

DESIGNER/DRAFTER: B.A./S.C.
CHECKED BY: J.H.M. II
SCALE: 3/4" = 1'-0"

STATE OF CONNECTICUT
DEPARTMENT OF TRANSPORTATION

Filename: ...\SB_MSH_173_462_BR02295_S-18_BEAM_DETER-A1-G4.dgn

SIGNATURE/BLOCK:
Close, Jensen and Miller, P.C.
1137 Silas Deane Highway
Wethersfield, CT 06109

PROJECT TITLE:
REHABILITATION OF BRIDGE
NO. 02295, ROUTE 136
OVER NORWALK RIVER

TOWN: NORWALK

DRAWING TITLE:
SPAN A-1 G4
DETERIORATION

PROJECT NO. 173-462
DRAWING NO. S-18
SHEET NO. 03.18

NOTE:

FOR NOTES AND BEAM REPAIR DETAILS SEE DWG. S-47.

LEGEND

- CRACK (HAIRLINE UNLESS DIMENSIONED OTHERWISE) (H.L.C.)
- SPALL AREA WITH EXPOSED REINFORCING (S.A. W/E.R.)
- SPALL AREA (S.A.)
- HOLLOW AREA (H.A.)
- SHALLOW REBAR (SH. A.)
- HONEY COMB AREA (H.C.A.)
- SCALE AREA (SC. A.)
- MAP CRACKS (MPCR)
- E EFFLORESCENCE (E)

KEY

F.H. = FULL HEIGHT
F.W. = FULL WIDTH
F.L. = FULL LENGTH
D.P. = DEEP

T.F. = TOP FLANGE
B.F. = BOTTOM FLANGE
L.R. = LAMINAR RUST
S.L. = SECTION LOSS
NEG. = NEGLIGIBLE
VT. = VERTICAL
C.P. = CONCRETE PATCH

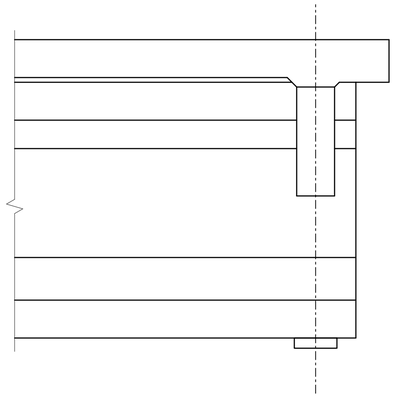

NORTH ELEVATION

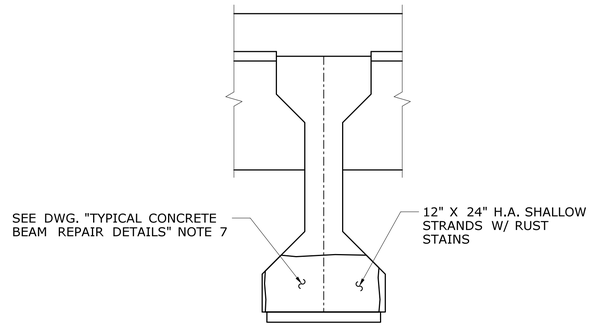

BEAM END

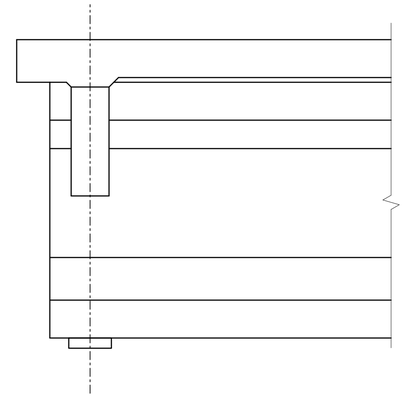

SOUTH ELEVATION

EXISTING CONDITION ABUTMENT NO. 1 SPAN A-1 G6

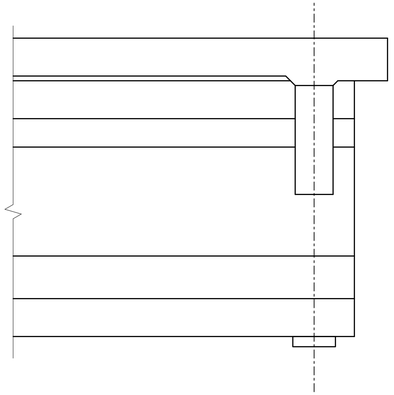

SOUTH ELEVATION

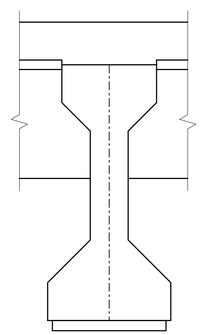

BEAM END

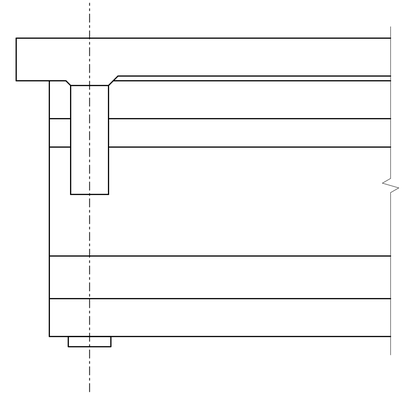

NORTH ELEVATION

EXISTING CONDITION PIER NO. 1 SPAN A-1 G6

REV.	DATE	REVISION DESCRIPTION	SHEET NO.

THE INFORMATION, INCLUDING ESTIMATED QUANTITIES OF WORK, SHOWN ON THESE SHEETS IS BASED ON LIMITED INVESTIGATIONS BY THE STATE AND IS IN NO WAY WARRANTED TO INDICATE THE CONDITIONS OF ACTUAL QUANTITIES OF WORK WHICH WILL BE REQUIRED.

Plotted Date: 9/25/2018

DESIGNER/DRAFTER: B.A./S.C.
CHECKED BY: J.H.M. II
SCALE: 3/4" = 1'-0"

STATE OF CONNECTICUT
DEPARTMENT OF TRANSPORTATION

Filename: ...\SB_MSH_173_462_BR02295_S-19_BEAM_DETER-A1-G6.dgn

SIGNATURE/ BLOCK:
Close, Jensen and Miller, P.C.
1137 Silas Deane Highway
Wethersfield, CT 06109

PROJECT TITLE:
REHABILITATION OF BRIDGE
NO. 02295, ROUTE 136
OVER NORWALK RIVER

TOWN: NORWALK

DRAWING TITLE:
SPAN A-1 G6
DETERIORATION

PROJECT NO. 173-462
DRAWING NO. S-19
SHEET NO. 03.19

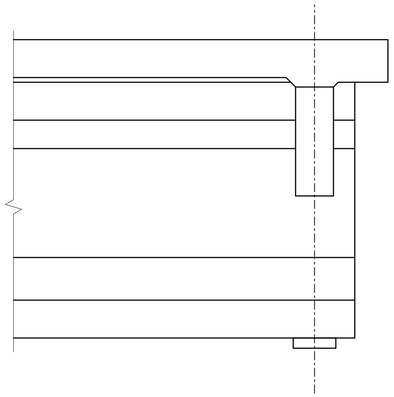

NORTH ELEVATION

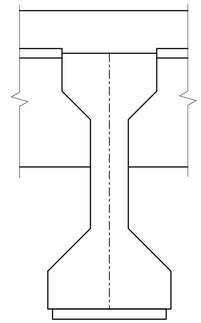

BEAM END

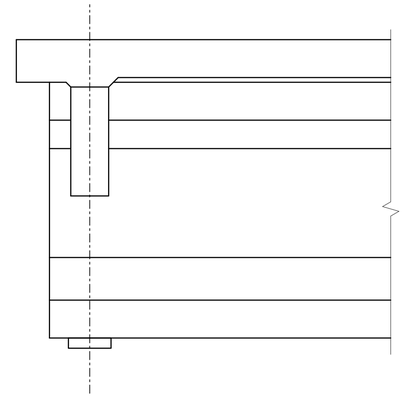

SOUTH ELEVATION

EXISTING CONDITION ABUTMENT NO. 1 SPAN A-1 G7

NOTE:

FOR NOTES AND BEAM REPAIR DETAILS SEE DWG. S-47.

LEGEND

- CRACK (HAIRLINE UNLESS DIMENSIONED OTHERWISE) (H.L.C.)
- SPALL AREA WITH EXPOSED REINFORCING (S.A. W/E.R.)
- SPALL AREA (S.A.)
- HOLLOW AREA (H.A.)
- SHALLOW REBAR (SH. A.)
- HONEY COMB AREA (H.C.A.)
- SCALE AREA (SC. A.)
- MAP CRACKS (MPCR)
- E EFFLORESCENCE (E)

KEY

F.H. = FULL HEIGHT
F.W. = FULL WIDTH
F.L. = FULL LENGTH
D.P. = DEEP

T.F. = TOP FLANGE
B.F. = BOTTOM FLANGE
L.R. = LAMINAR RUST
S.L. = SECTION LOSS
NEG. = NEGLIGIBLE
VT. = VERTICAL
C.P. = CONCRETE PATCH

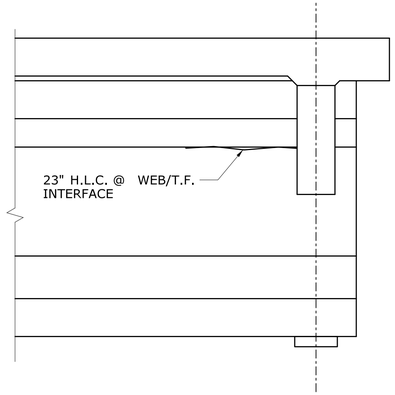

SOUTH ELEVATION

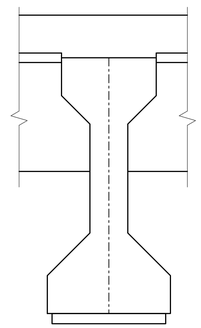

BEAM END

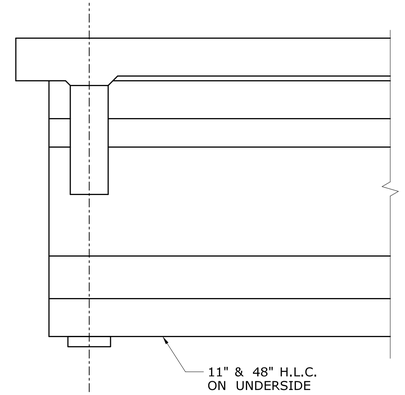

NORTH ELEVATION

EXISTING CONDITION PIER NO. 1 SPAN A-1 G7

REV.	DATE	REVISION DESCRIPTION	SHEET NO.

THE INFORMATION, INCLUDING ESTIMATED QUANTITIES OF WORK, SHOWN ON THESE SHEETS IS BASED ON LIMITED INVESTIGATIONS BY THE STATE AND IS IN NO WAY WARRANTED TO INDICATE THE CONDITIONS OF ACTUAL QUANTITIES OF WORK WHICH WILL BE REQUIRED.

Plotted Date: 9/25/2018

DESIGNER/DRAFTER: B.A./S.C.
CHECKED BY: J.H.M. II
SCALE: 3/4" = 1'-0"

STATE OF CONNECTICUT
DEPARTMENT OF TRANSPORTATION

Filename: ...\SB_MSH_173_462_BR02295_S-20_BEAM_DETER-A1-G7.dgn

SIGNATURE/BLOCK:
Close, Jensen and Miller, P.C.
1137 Silas Deane Highway
Wethersfield, CT 06109

PROJECT TITLE:
REHABILITATION OF BRIDGE
NO. 02295, ROUTE 136
OVER NORWALK RIVER

TOWN: NORWALK

DRAWING TITLE:
SPAN A-1 G7
DETERIORATION

PROJECT NO. 173-462
DRAWING NO. S-20
SHEET NO. 03.20

NOTE:

FOR NOTES AND BEAM REPAIR DETAILS SEE DWG. S-47.

LEGEND

- CRACK (HAIRLINE UNLESS DIMENSIONED OTHERWISE) (H.L.C.)
- SPALL AREA WITH EXPOSED REINFORCING (S.A. W/E.R.)
- SPALL AREA (S.A.)
- HOLLOW AREA (H.A.)
- SHALLOW REBAR (SH. A.)
- HONEY COMB AREA (H.C.A.)
- SCALE AREA (SC. A.)
- MAP CRACKS (MPCR)
- E EFFLORESCENCE (E)

KEY

F.H. = FULL HEIGHT
F.W. = FULL WIDTH
F.L. = FULL LENGTH
D.P. = DEEP

T.F. = TOP FLANGE
B.F. = BOTTOM FLANGE
L.R. = LAMINAR RUST
S.L. = SECTION LOSS
NEG. = NEGLIGIBLE
VT. = VERTICAL
C.P. = CONCRETE PATCH

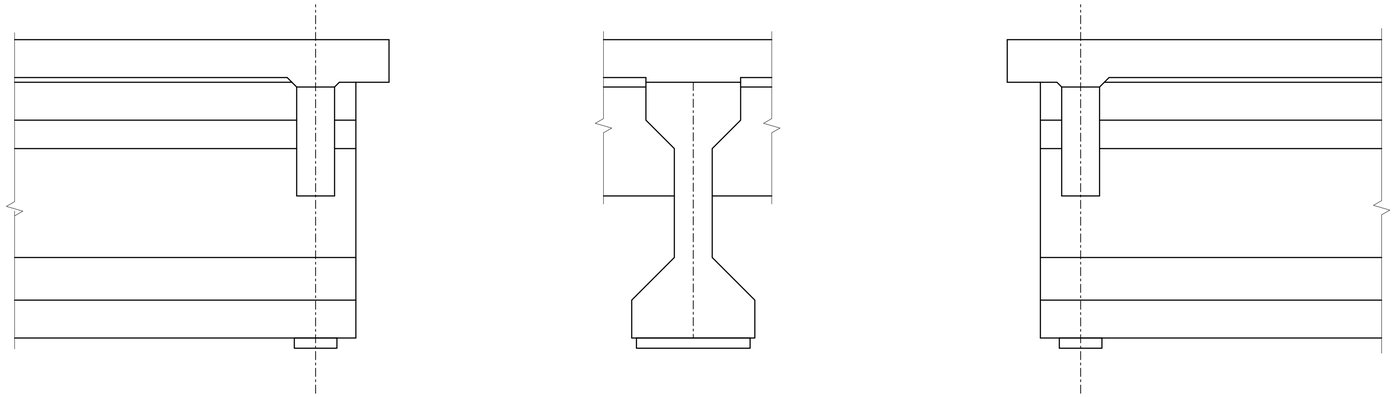

NORTH ELEVATION **BEAM END** **SOUTH ELEVATION**

EXISTING CONDITION ABUTMENT NO. 1 SPAN A-1 G8

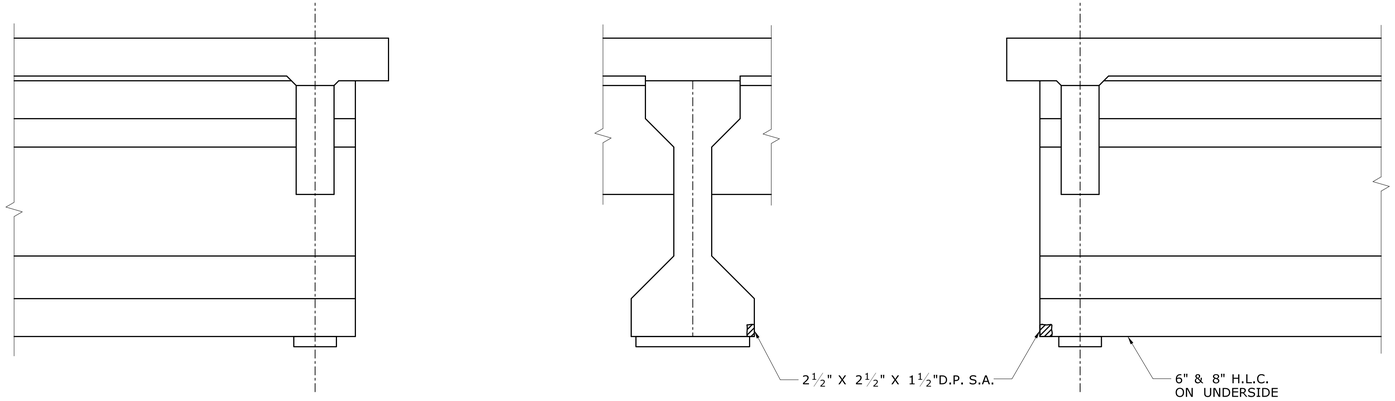

SOUTH ELEVATION **BEAM END** **NORTH ELEVATION**

EXISTING CONDITION PIER NO. 1 SPAN A-1 G8

REV.	DATE	REVISION DESCRIPTION	SHEET NO.

THE INFORMATION, INCLUDING ESTIMATED QUANTITIES OF WORK, SHOWN ON THESE SHEETS IS BASED ON LIMITED INVESTIGATIONS BY THE STATE AND IS IN NO WAY WARRANTED TO INDICATE THE CONDITIONS OF ACTUAL QUANTITIES OF WORK WHICH WILL BE REQUIRED.

Plotted Date: 9/25/2018

DESIGNER/DRAFTER: B.A./S.C.
CHECKED BY: J.H.M. II
SCALE: 3/4" = 1'-0"

STATE OF CONNECTICUT
DEPARTMENT OF TRANSPORTATION

Filename: ...\SB_MSH_173_462_BR02295_S-21_BEAM_DETER-A1-G8.dgn

SIGNATURE/ BLOCK:
Close, Jensen and Miller, P.C.
1137 Silas Deane Highway
Wethersfield, CT 06109

PROJECT TITLE:
REHABILITATION OF BRIDGE NO. 02295, ROUTE 136 OVER NORWALK RIVER

TOWN: **NORWALK**

DRAWING TITLE: **SPAN A-1 G8 DETERIORATION**

PROJECT NO. 173-462
DRAWING NO. S-21
SHEET NO. 03.21

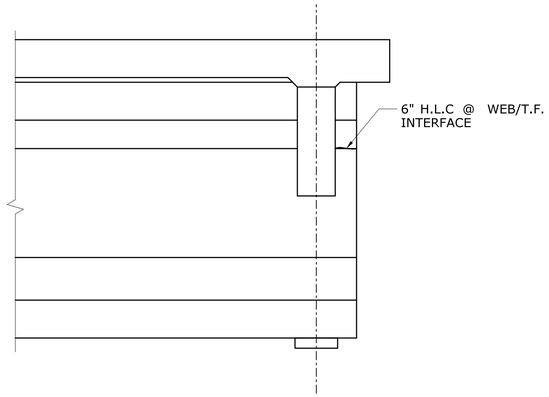

NORTH ELEVATION

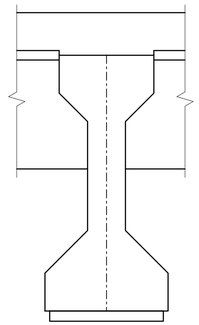

BEAM END

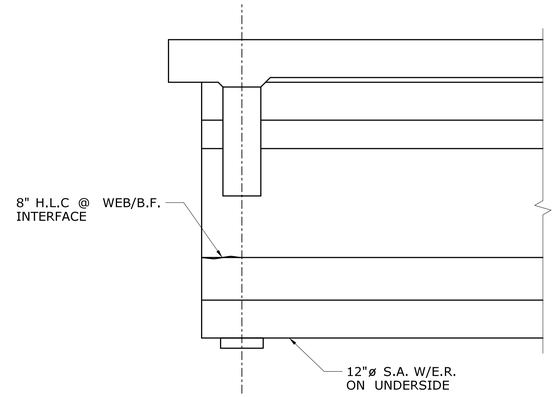

SOUTH ELEVATION

EXISTING CONDITION ABUTMENT NO. 1 SPAN A-1 G9

NOTE:

FOR NOTES AND BEAM REPAIR DETAILS SEE DWG. S-47.

LEGEND

- CRACK (HAIRLINE UNLESS DIMENSIONED OTHERWISE) (H.L.C.)
- SPALL AREA WITH EXPOSED REINFORCING (S.A. W/E.R.)
- SPALL AREA (S.A.)
- HOLLOW AREA (H.A.)
- SHALLOW REBAR (SH. A.)
- HONEY COMB AREA (H.C.A.)
- SCALE AREA (SC. A.)
- MAP CRACKS (MPCR)
- E EFFLORESCENCE (E)

KEY

F.H. = FULL HEIGHT
F.W. = FULL WIDTH
F.L. = FULL LENGTH
D.P. = DEEP

T.F. = TOP FLANGE
B.F. = BOTTOM FLANGE
L.R. = LAMINAR RUST
S.L. = SECTION LOSS
NEG. = NEGLIGIBLE
VT. = VERTICAL
C.P. = CONCRETE PATCH

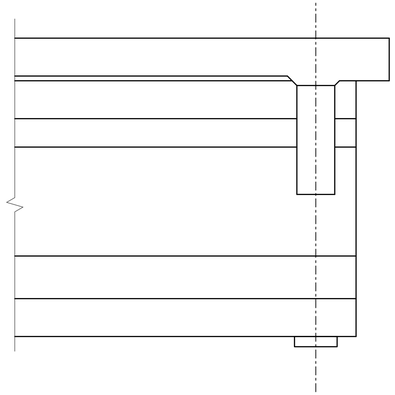

SOUTH ELEVATION

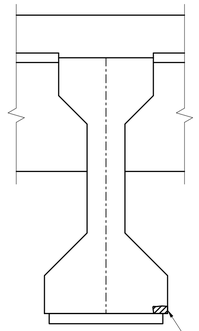

BEAM END

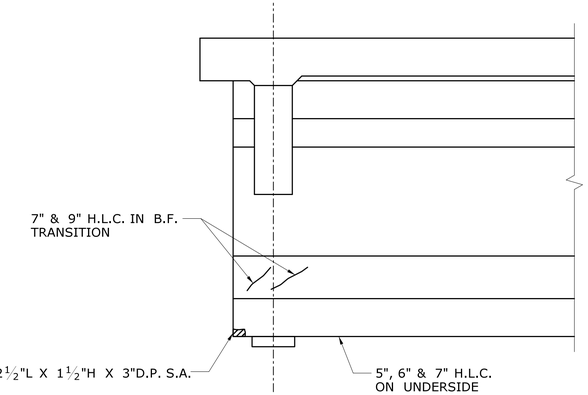

NORTH ELEVATION

EXISTING CONDITION PIER NO. 1 SPAN A-1 G9

REV.	DATE	REVISION DESCRIPTION	SHEET NO.

THE INFORMATION, INCLUDING ESTIMATED QUANTITIES OF WORK, SHOWN ON THESE SHEETS IS BASED ON LIMITED INVESTIGATIONS BY THE STATE AND IS IN NO WAY WARRANTED TO INDICATE THE CONDITIONS OF ACTUAL QUANTITIES OF WORK WHICH WILL BE REQUIRED.

Plotted Date: 9/25/2018

DESIGNER/DRAFTER: B.A./S.C.
CHECKED BY: J.H.M. II
SCALE: ¾" = 1'-0"

STATE OF CONNECTICUT
DEPARTMENT OF TRANSPORTATION

Filename: ...\SB_MSH_173_462_BR02295_S-22_BEAM_DETER-A1-G9.dgn

SIGNATURE/BLOCK:
Close, Jensen and Miller, P.C.
1137 Silas Deane Highway
Wethersfield, CT 06109

PROJECT TITLE:
REHABILITATION OF BRIDGE NO. 02295, ROUTE 136 OVER NORWALK RIVER

TOWN: **NORWALK**

DRAWING TITLE: **SPAN A-1 G9 DETERIORATION**

PROJECT NO. 173-462
DRAWING NO. S-22
SHEET NO. 03.22

NOTE:

FOR NOTES AND BEAM REPAIR DETAILS SEE DWG. S-47.

LEGEND

- CRACK (HAIRLINE UNLESS DIMENSIONED OTHERWISE) (H.L.C.)
- SPALL AREA WITH EXPOSED REINFORCING (S.A. W/E.R.)
- SPALL AREA (S.A.)
- HOLLOW AREA (H.A.)
- SHALLOW REBAR (SH. A.)
- HONEY COMB AREA (H.C.A.)
- SCALE AREA (SC. A.)
- MAP CRACKS (MPCR)
- E EFFLORESCENCE (E)

KEY

F.H. = FULL HEIGHT
F.W. = FULL WIDTH
F.L. = FULL LENGTH
D.P. = DEEP

T.F. = TOP FLANGE
B.F. = BOTTOM FLANGE
L.R. = LAMINAR RUST
S.L. = SECTION LOSS
NEG. = NEGLIGIBLE
VT. = VERTICAL
C.P. = CONCRETE PATCH

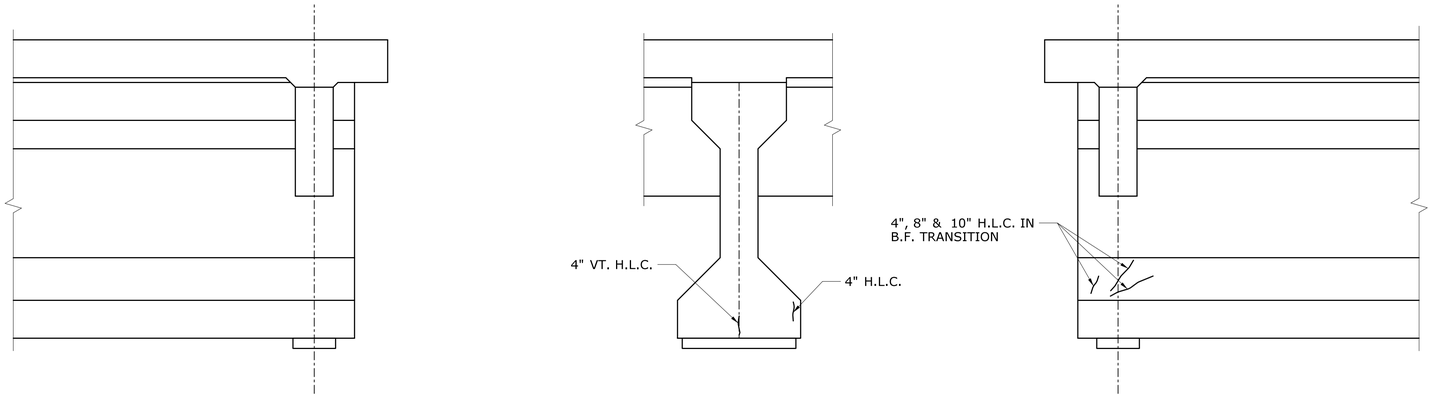

NORTH ELEVATION **BEAM END** **SOUTH ELEVATION**

EXISTING CONDITION ABUTMENT NO. 1 SPAN A-1 G10

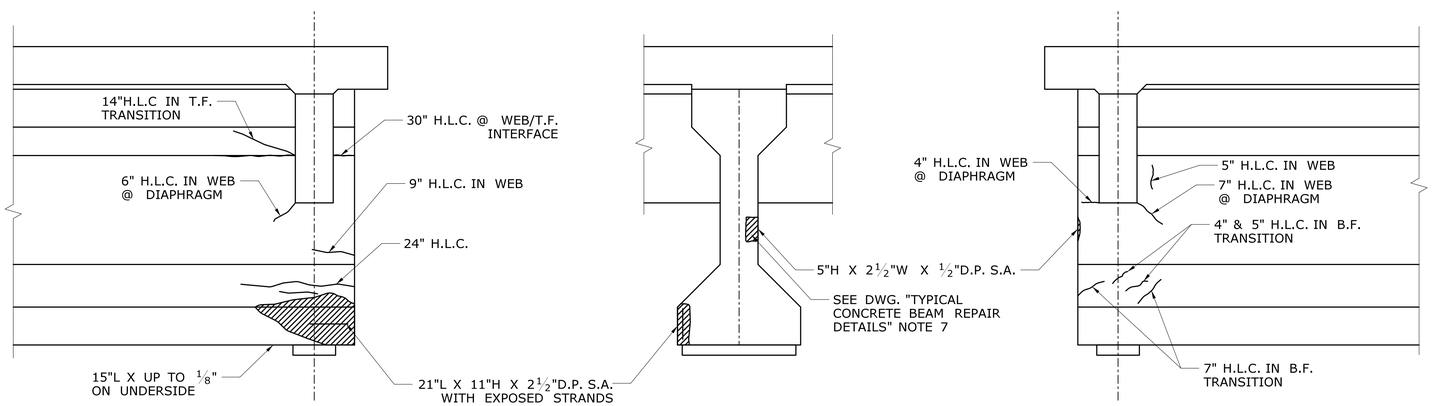

SOUTH ELEVATION **BEAM END** **NORTH ELEVATION**

EXISTING CONDITION PIER NO. 1 SPAN A-1 G10

REV.	DATE	REVISION DESCRIPTION	SHEET NO.

THE INFORMATION, INCLUDING ESTIMATED QUANTITIES OF WORK, SHOWN ON THESE SHEETS IS BASED ON LIMITED INVESTIGATIONS BY THE STATE AND IS IN NO WAY WARRANTED TO INDICATE THE CONDITIONS OF ACTUAL QUANTITIES OF WORK WHICH WILL BE REQUIRED.

Plotted Date: 9/25/2018

DESIGNER/DRAFTER: B.A./S.C.
CHECKED BY: J.H.M. II
SCALE: 3/4" = 1'-0"

STATE OF CONNECTICUT
DEPARTMENT OF TRANSPORTATION

Filename: ...\SB_MSH_173_462_BR02295_S-23_BEAM_DETER-A1-G10.dgn

SIGNATURE/BLOCK:
Close, Jensen and Miller, P.C.
1137 Silas Deane Highway
Wethersfield, CT 06109

PROJECT TITLE:
REHABILITATION OF BRIDGE NO. 02295, ROUTE 136 OVER NORWALK RIVER

TOWN: **NORWALK**

DRAWING TITLE: **SPAN A-1 G1O DETERIORATION**

PROJECT NO. 173-462
DRAWING NO. S-23
SHEET NO. 03.23

NOTE:

FOR NOTES AND BEAM REPAIR DETAILS SEE DWG. S-47.

LEGEND

- CRACK (HAIRLINE UNLESS DIMENSIONED OTHERWISE) (H.L.C.)
- SPALL AREA WITH EXPOSED REINFORCING (S.A. W/E.R.)
- SPALL AREA (S.A.)
- HOLLOW AREA (H.A.)
- SHALLOW REBAR (SH. A.)
- HONEY COMB AREA (H.C.A.)
- SCALE AREA (SC. A.)
- MAP CRACKS (MPCR)
- E EFFLORESCENCE (E)

KEY

F.H. = FULL HEIGHT
F.W. = FULL WIDTH
F.L. = FULL LENGTH
D.P. = DEEP

T.F. = TOP FLANGE
B.F. = BOTTOM FLANGE
L.R. = LAMINAR RUST
S.L. = SECTION LOSS
NEG. = NEGLIGIBLE
VT. = VERTICAL
C.P. = CONCRETE PATCH

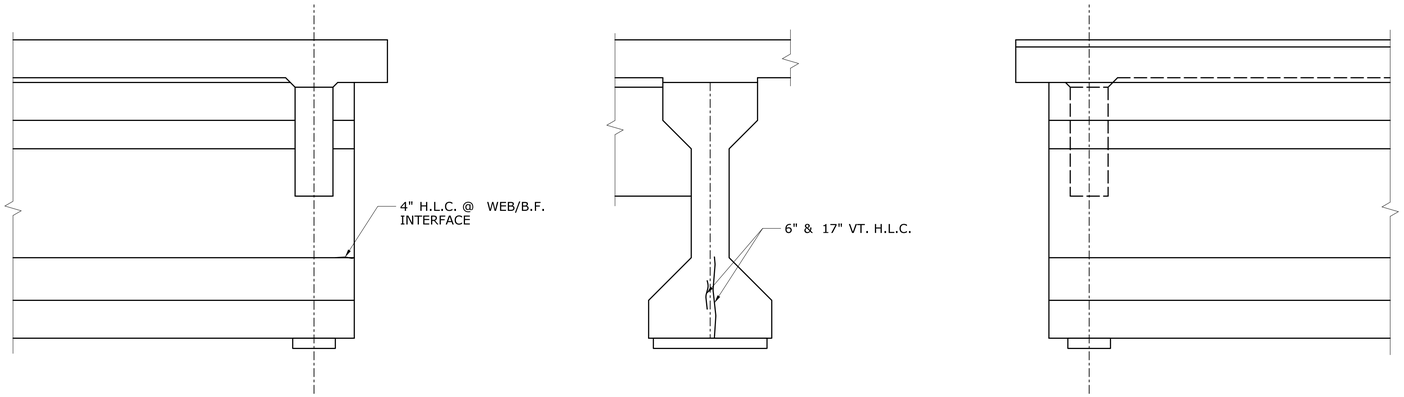

NORTH ELEVATION **BEAM END** **SOUTH ELEVATION**

EXISTING CONDITION ABUTMENT NO. 1 SPAN A-1 G11

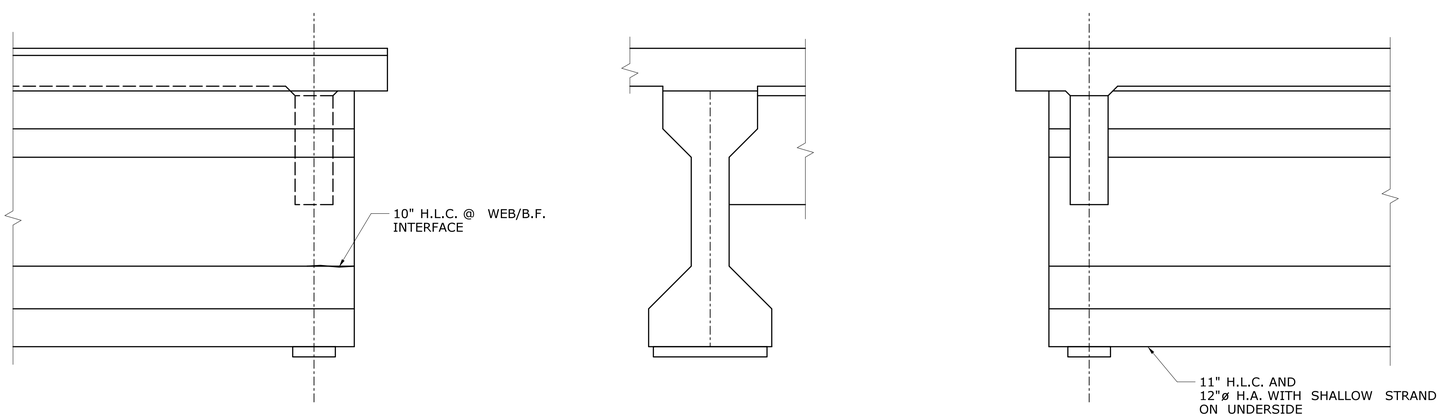

SOUTH ELEVATION **BEAM END** **NORTH ELEVATION**

EXISTING CONDITION PIER NO. 1 SPAN A-1 G11

REV.	DATE	REVISION DESCRIPTION	SHEET NO.

THE INFORMATION, INCLUDING ESTIMATED QUANTITIES OF WORK, SHOWN ON THESE SHEETS IS BASED ON LIMITED INVESTIGATIONS BY THE STATE AND IS IN NO WAY WARRANTED TO INDICATE THE CONDITIONS OF ACTUAL QUANTITIES OF WORK WHICH WILL BE REQUIRED.

Plotted Date: 9/25/2018

DESIGNER/DRAFTER: B.A./S.C.
CHECKED BY: J.H.M. II
SCALE: 3/4" = 1'-0"

STATE OF CONNECTICUT
DEPARTMENT OF TRANSPORTATION

Filename: ...\SB_MSH_173_462_BR02295_S-24_BEAM_DETER-A1-G11.dgn

SIGNATURE/BLOCK:
Close, Jensen and Miller, P.C.
1137 Silas Deane Highway
Wethersfield, CT 06109

PROJECT TITLE:
REHABILITATION OF BRIDGE NO. 02295, ROUTE 136 OVER NORWALK RIVER

TOWN: **NORWALK**

DRAWING TITLE: **SPAN A-1 G11 DETERIORATION**

PROJECT NO. 173-462
DRAWING NO. S-24
SHEET NO. 03.24

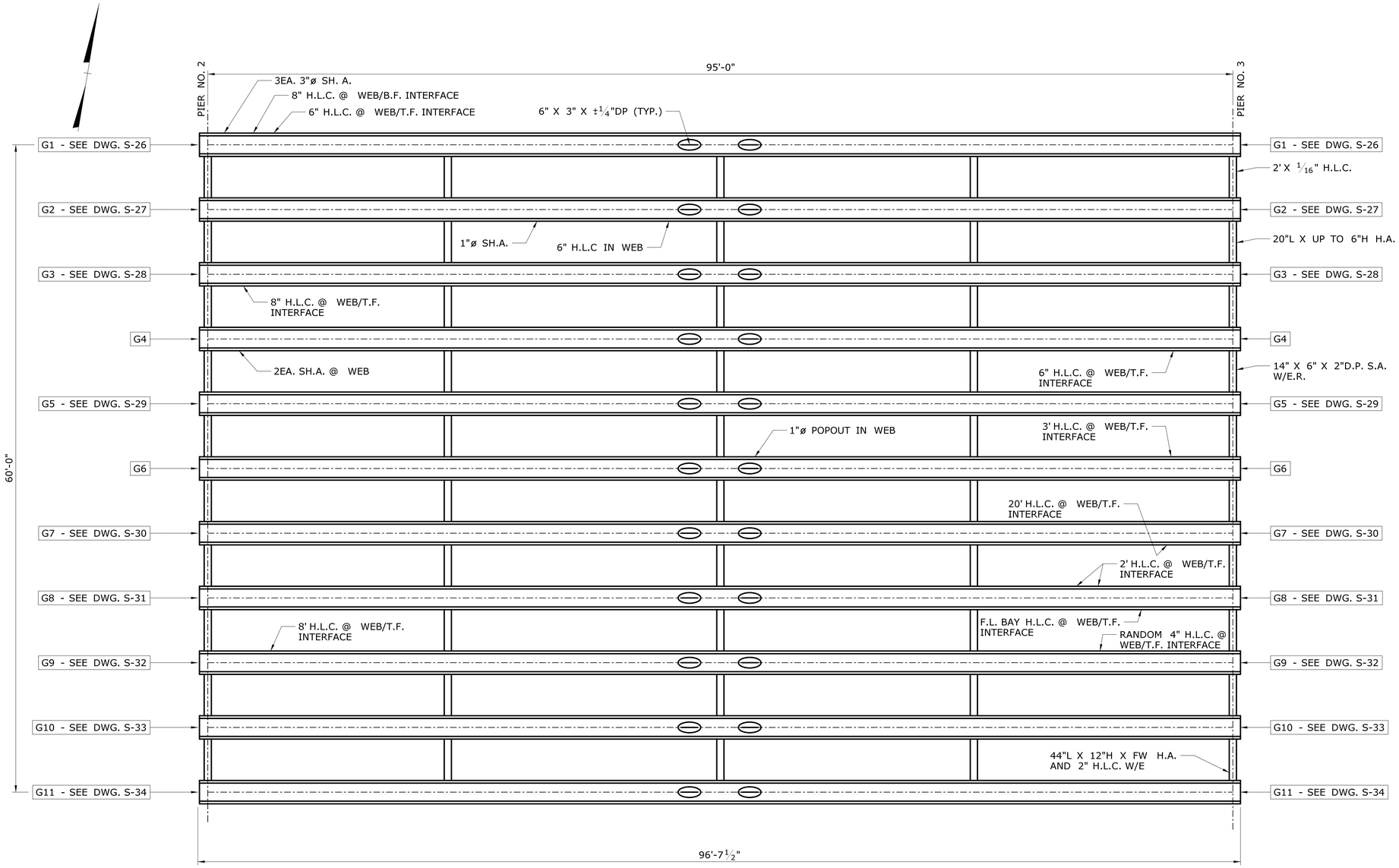

LEGEND

- CRACK (HAIRLINE UNLESS DIMENSIONED OTHERWISE) (H.L.C.)
- SPALL AREA WITH EXPOSED REINFORCING (S.A. W/E.R.)
- SPALL AREA (S.A.)
- HOLLOW AREA (H.A.)
- SHALLOW REBAR (SH. A.)
- HONEY COMB AREA (H.C.A.)
- SCALE AREA (SC. A.)
- MAP CRACKS (MPCR)
- E EFFLORESCENCE (E)

KEY

F.H. = FULL HEIGHT
F.W. = FULL WIDTH
F.L. = FULL LENGTH
D.P. = DEEP

T.F. = TOP FLANGE
B.F. = BOTTOM FLANGE
L.R. = LAMINAR RUST
S.L. = SECTION LOSS
NEG. = NEGLIGIBLE
VT. = VERTICAL

SPAN P-2 FRAMING PLAN

REV.	DATE	REVISION DESCRIPTION	SHEET NO.

THE INFORMATION, INCLUDING ESTIMATED QUANTITIES OF WORK, SHOWN ON THESE SHEETS IS BASED ON LIMITED INVESTIGATIONS BY THE STATE AND IS IN NO WAY WARRANTED TO INDICATE THE CONDITIONS OF ACTUAL QUANTITIES OF WORK WHICH WILL BE REQUIRED.

Plotted Date: 9/25/2018

DESIGNER/DRAFTER: B.A./S.C.
CHECKED BY: J.H.M. II
SCALE: 3/16" = 1'-0"

STATE OF CONNECTICUT
DEPARTMENT OF TRANSPORTATION

Filename: ...\SB_MSH_173_462_BR02295_S-25_FRAM_SPAN-P-2.dgn

SIGNATURE/ BLOCK:
Close, Jensen and Miller, P.C.
1137 Silas Deane Highway
Wethersfield, CT 06109

PROJECT TITLE:
REHABILITATION OF BRIDGE NO. 02295, ROUTE 136 OVER NORWALK RIVER

TOWN: NORWALK

DRAWING TITLE: SPAN P-2 FRAMING PLAN

PROJECT NO. 173-462
DRAWING NO. S-25
SHEET NO. 03.25

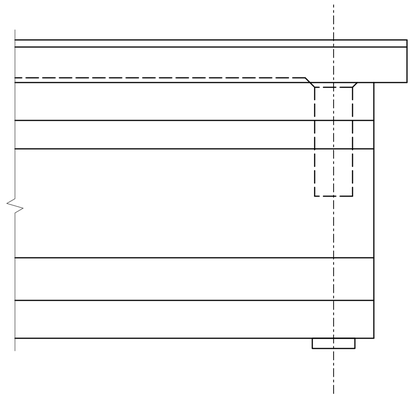

NORTH ELEVATION

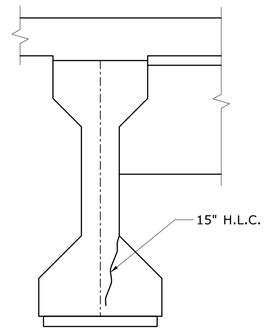

BEAM END

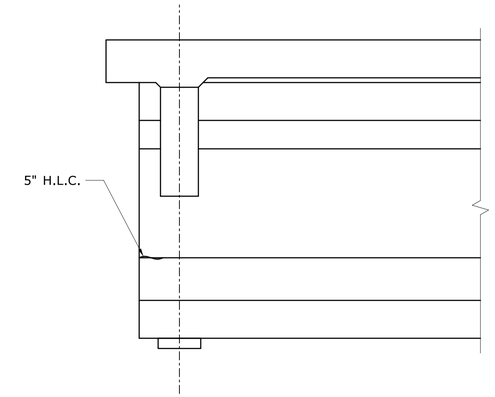

SOUTH ELEVATION

EXISTING CONDITION PIER NO. 2 SPAN P-2 G1

NOTE:

FOR NOTES AND BEAM REPAIR DETAILS SEE DWG. S-47.

LEGEND

- CRACK (HAIRLINE UNLESS DIMENSIONED OTHERWISE) (H.L.C.)
- SPALL AREA WITH EXPOSED REINFORCING (S.A. W/E.R.)
- SPALL AREA (S.A.)
- HOLLOW AREA (H.A.)
- SHALLOW REBAR (SH. A.)
- HONEY COMB AREA (H.C.A.)
- SCALE AREA (SC. A.)
- MAP CRACKS (MPCR)
- E EFFLORESCENCE (E)

KEY

F.H. = FULL HEIGHT
F.W. = FULL WIDTH
F.L. = FULL LENGTH
D.P. = DEEP

T.F. = TOP FLANGE
B.F. = BOTTOM FLANGE
L.R. = LAMINAR RUST
S.L. = SECTION LOSS
NEG. = NEGLIGIBLE
VT. = VERTICAL
C.P. = CONCRETE PATCH

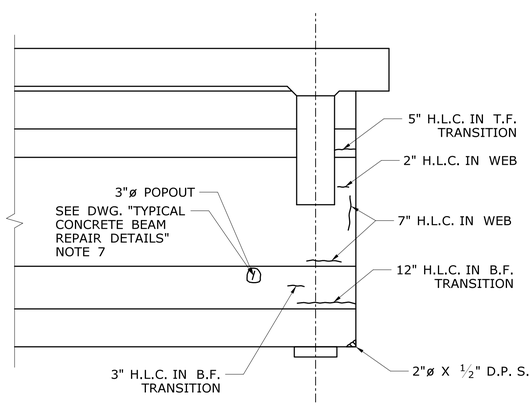

SOUTH ELEVATION

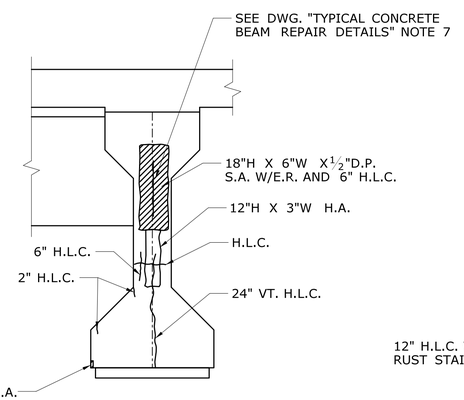

BEAM END

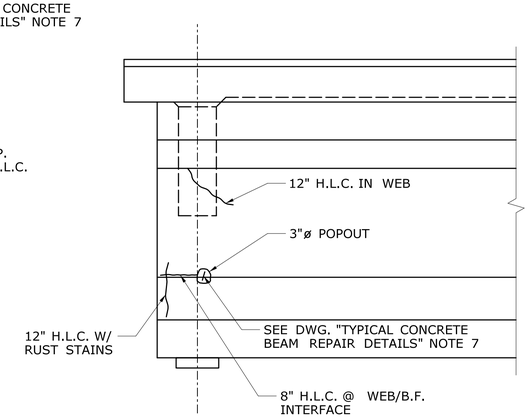

NORTH ELEVATION

EXISTING CONDITION PIER NO. 3 SPAN P-2 G1

REV.	DATE	REVISION DESCRIPTION	SHEET NO.

THE INFORMATION, INCLUDING ESTIMATED QUANTITIES OF WORK, SHOWN ON THESE SHEETS IS BASED ON LIMITED INVESTIGATIONS BY THE STATE AND IS IN NO WAY WARRANTED TO INDICATE THE CONDITIONS OF ACTUAL QUANTITIES OF WORK WHICH WILL BE REQUIRED.

Plotted Date: 9/25/2018

DESIGNER/DRAFTER: B.A./S.C.
CHECKED BY: J.H.M. II
SCALE: ¾" = 1'-0"

STATE OF CONNECTICUT
DEPARTMENT OF TRANSPORTATION

Filename: ...\SB_MSH_173_462_BR02295_S-26_BEAM_DETER-P2-G1.dgn

SIGNATURE/BLOCK:
Close, Jensen and Miller, P.C.
1137 Silas Deane Highway
Wethersfield, CT 06109

PROJECT TITLE:
REHABILITATION OF BRIDGE NO. 02295, ROUTE 136 OVER NORWALK RIVER

TOWN: **NORWALK**

DRAWING TITLE: **SPAN P-2 G1 DETERIORATION**

PROJECT NO. 173-462
DRAWING NO. S-26
SHEET NO. 03.26

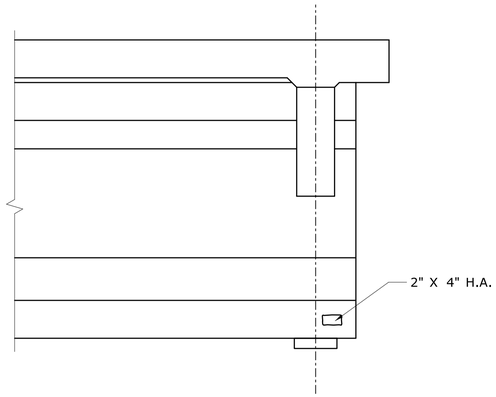

NORTH ELEVATION

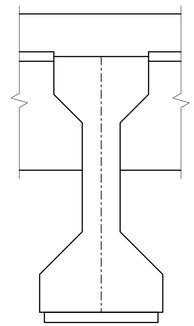

BEAM END

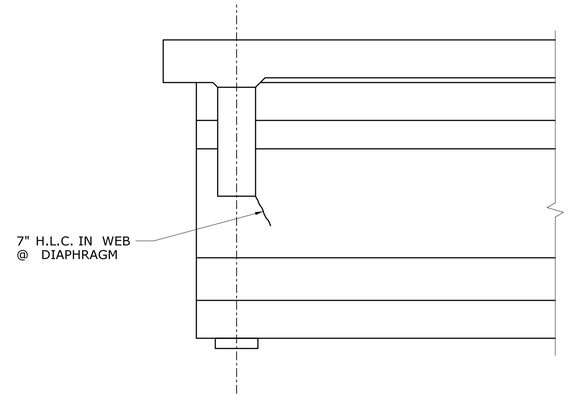

SOUTH ELEVATION

EXISTING CONDITION PIER NO. 2 SPAN P-2 G2

NOTE:

FOR NOTES AND BEAM REPAIR DETAILS SEE DWG. S-47.

LEGEND

- CRACK (HAIRLINE UNLESS DIMENSIONED OTHERWISE) (H.L.C.)
- SPALL AREA WITH EXPOSED REINFORCING (S.A. W/E.R.)
- SPALL AREA (S.A.)
- HOLLOW AREA (H.A.)
- SHALLOW REBAR (SH. A.)
- HONEY COMB AREA (H.C.A.)
- SCALE AREA (SC. A.)
- MAP CRACKS (MPCR)
- E EFFLORESCENCE (E)

KEY

F.H. = FULL HEIGHT
F.W. = FULL WIDTH
F.L. = FULL LENGTH
D.P. = DEEP

T.F. = TOP FLANGE
B.F. = BOTTOM FLANGE
L.R. = LAMINAR RUST
S.L. = SECTION LOSS
NEG. = NEGLIGIBLE
VT. = VERTICAL
C.P. = CONCRETE PATCH

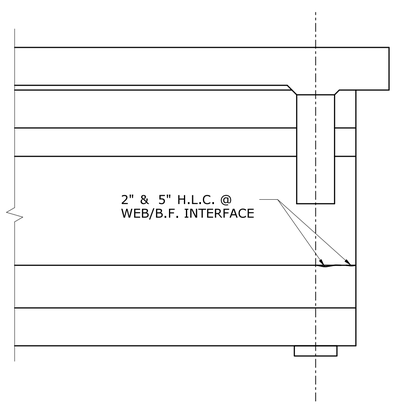

SOUTH ELEVATION

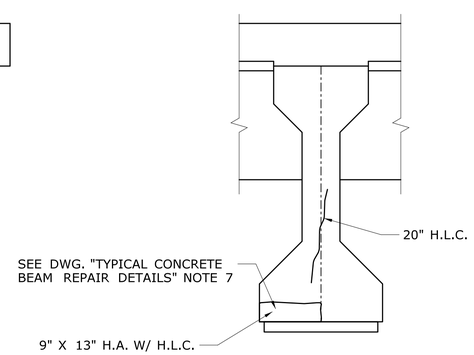

BEAM END

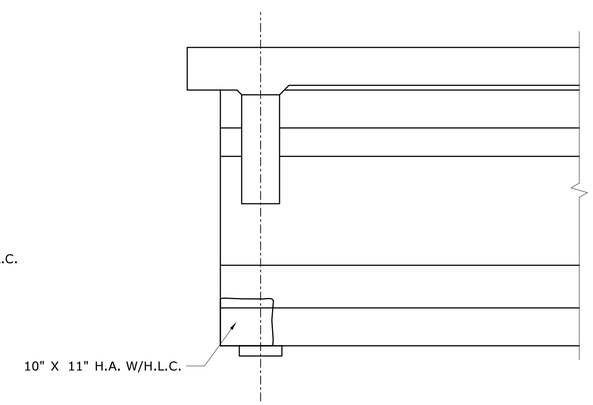

NORTH ELEVATION

EXISTING CONDITION PIER NO. 3 SPAN P-2 G2

REV.	DATE	REVISION DESCRIPTION	SHEET NO.

THE INFORMATION, INCLUDING ESTIMATED QUANTITIES OF WORK, SHOWN ON THESE SHEETS IS BASED ON LIMITED INVESTIGATIONS BY THE STATE AND IS IN NO WAY WARRANTED TO INDICATE THE CONDITIONS OF ACTUAL QUANTITIES OF WORK WHICH WILL BE REQUIRED.

Plotted Date: 9/25/2018

DESIGNER/DRAFTER: B.A./S.C.
CHECKED BY: J.H.M. II
SCALE: 3/4" = 1'-0"

STATE OF CONNECTICUT
DEPARTMENT OF TRANSPORTATION

Filename: ...\SB..MSH..173..462..BR02295..S-27..BEAM..DETER-P2-G2.dgn

SIGNATURE/ BLOCK:
Close, Jensen and Miller, P.C.
1137 Silas Deane Highway
Wethersfield, CT 06109

PROJECT TITLE:
REHABILITATION OF BRIDGE NO. 02295, ROUTE 136 OVER NORWALK RIVER

TOWN: **NORWALK**

DRAWING TITLE: **SPAN P-2 G2 DETERIORATION**

PROJECT NO. 173-462
DRAWING NO. S-27
SHEET NO. 03.27

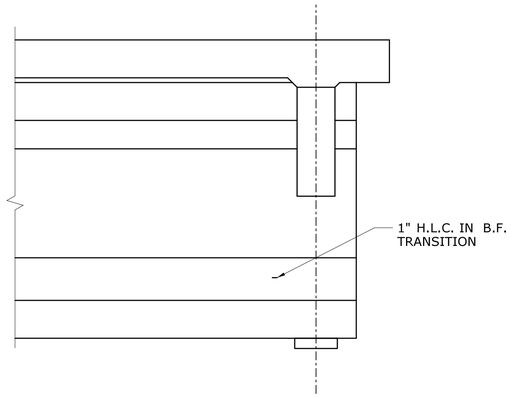

NORTH ELEVATION

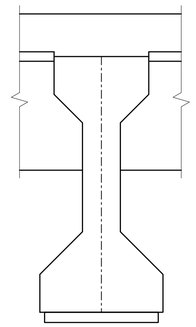

BEAM END

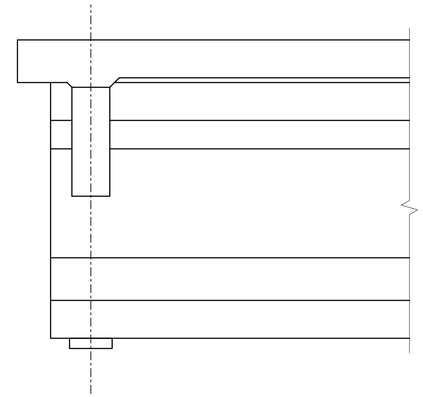

SOUTH ELEVATION

EXISTING CONDITION PIER NO. 2 SPAN P-2 G3

NOTE:

FOR NOTES AND BEAM REPAIR DETAILS SEE DWG. S-47.

LEGEND

- CRACK (HAIRLINE UNLESS DIMENSIONED OTHERWISE) (H.L.C.)
- SPALL AREA WITH EXPOSED REINFORCING (S.A. W/E.R.)
- SPALL AREA (S.A.)
- HOLLOW AREA (H.A.)
- SHALLOW REBAR (SH. A.)
- HONEY COMB AREA (H.C.A.)
- SCALE AREA (SC. A.)
- MAP CRACKS (MPCR)
- E EFFLORESCENCE (E)

KEY

F.H. = FULL HEIGHT
F.W. = FULL WIDTH
F.L. = FULL LENGTH
D.P. = DEEP

T.F. = TOP FLANGE
B.F. = BOTTOM FLANGE
L.R. = LAMINAR RUST
S.L. = SECTION LOSS
NEG. = NEGLIGIBLE
VT. = VERTICAL
C.P. = CONCRETE PATCH

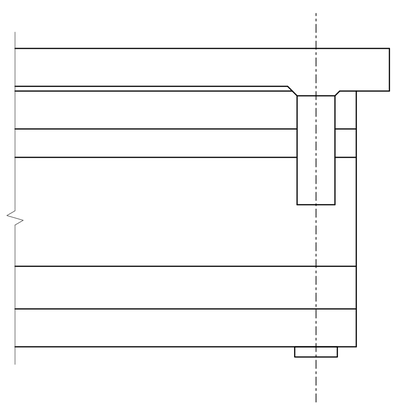

SOUTH ELEVATION

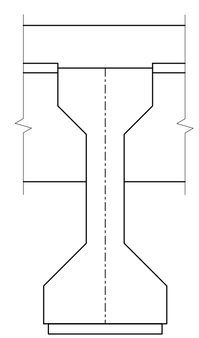

BEAM END

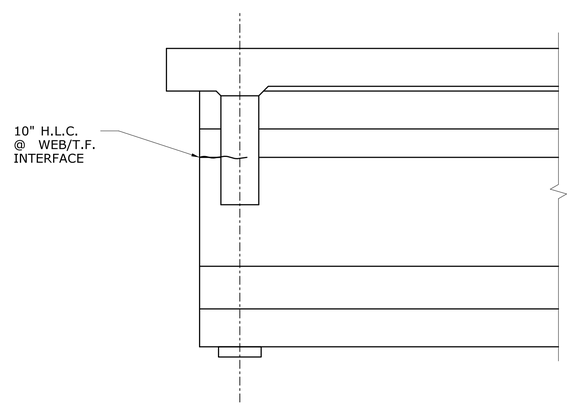

NORTH ELEVATION

EXISTING CONDITION PIER NO. 3 SPAN P-2 G3

REV.	DATE	REVISION DESCRIPTION	SHEET NO.

THE INFORMATION, INCLUDING ESTIMATED QUANTITIES OF WORK, SHOWN ON THESE SHEETS IS BASED ON LIMITED INVESTIGATIONS BY THE STATE AND IS IN NO WAY WARRANTED TO INDICATE THE CONDITIONS OF ACTUAL QUANTITIES OF WORK WHICH WILL BE REQUIRED.

Plotted Date: 9/25/2018

DESIGNER/DRAFTER: **B.A./S.C.**
CHECKED BY: **J.H.M. II**
SCALE: 3/4" = 1'-0"

STATE OF CONNECTICUT
DEPARTMENT OF TRANSPORTATION

Filename: ...\SB_MSH_173_462_BR02295_S-28_BEAM_DETER-P2-G3.dgn

SIGNATURE/ BLOCK:
Close, Jensen and Miller, P.C.
1137 Silas Deane Highway
Wethersfield, CT 06109

PROJECT TITLE:
REHABILITATION OF BRIDGE NO. 02295, ROUTE 136 OVER NORWALK RIVER

TOWN: **NORWALK**

DRAWING TITLE: **SPAN P-2 G3 DETERIORATION**

PROJECT NO. **173-462**
DRAWING NO. **S-28**
SHEET NO. **03.28**

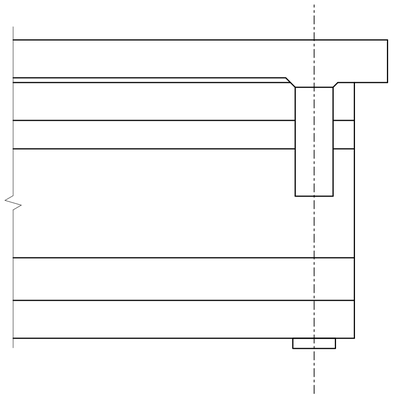

NORTH ELEVATION

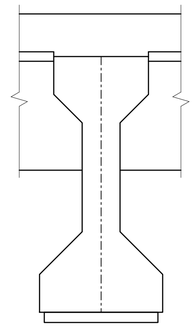

BEAM END

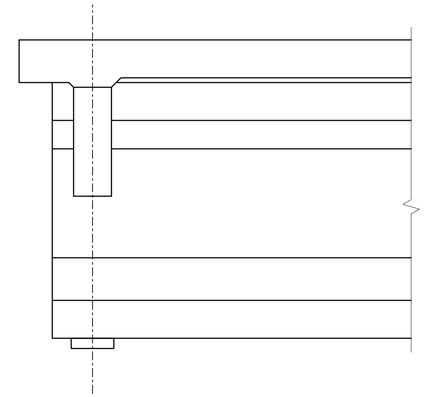

SOUTH ELEVATION

EXISTING CONDITION PIER NO. 2 SPAN P-2 G5

NOTE:

FOR NOTES AND BEAM REPAIR DETAILS SEE DWG. S-47.

LEGEND

- CRACK (HAIRLINE UNLESS DIMENSIONED OTHERWISE) (H.L.C.)
- SPALL AREA WITH EXPOSED REINFORCING (S.A. W/E.R.)
- SPALL AREA (S.A.)
- HOLLOW AREA (H.A.)
- SHALLOW REBAR (SH. A.)
- HONEY COMB AREA (H.C.A.)
- SCALE AREA (SC. A.)
- MAP CRACKS (MPCR)
- E EFFLORESCENCE (E)

KEY

F.H. = FULL HEIGHT
F.W. = FULL WIDTH
F.L. = FULL LENGTH
D.P. = DEEP

T.F. = TOP FLANGE
B.F. = BOTTOM FLANGE
L.R. = LAMINAR RUST
S.L. = SECTION LOSS
NEG. = NEGLIGIBLE
VT. = VERTICAL
C.P. = CONCRETE PATCH

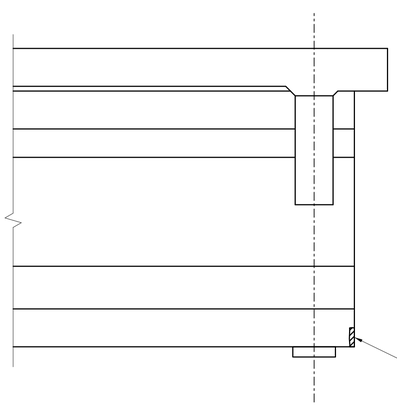

SOUTH ELEVATION

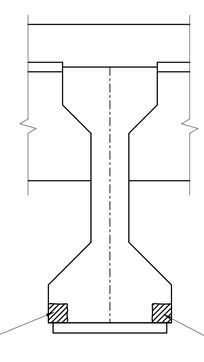

BEAM END

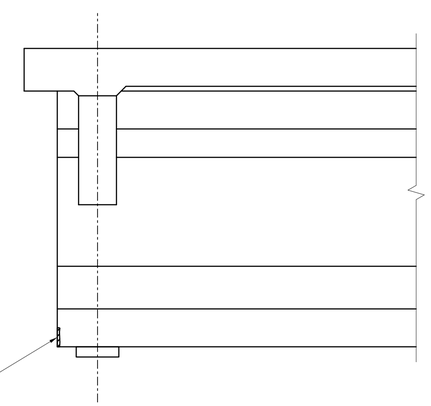

NORTH ELEVATION

EXISTING CONDITION PIER NO. 3 SPAN P-2 G5

REV.	DATE	REVISION DESCRIPTION	SHEET NO.

THE INFORMATION, INCLUDING ESTIMATED QUANTITIES OF WORK, SHOWN ON THESE SHEETS IS BASED ON LIMITED INVESTIGATIONS BY THE STATE AND IS IN NO WAY WARRANTED TO INDICATE THE CONDITIONS OF ACTUAL QUANTITIES OF WORK WHICH WILL BE REQUIRED.

Plotted Date: 9/25/2018

DESIGNER/DRAFTER: **B.A./S.C.**
CHECKED BY: **J.H.M. II**
SCALE: ¾" = 1'-0"

STATE OF CONNECTICUT
DEPARTMENT OF TRANSPORTATION

Filename: ...\SB_MSH_173_462_BR02295_S-29_BEAM_DETER-P2-G5.dgn

SIGNATURE/ BLOCK:
Close, Jensen and Miller, P.C.
1137 Silas Deane Highway
Wethersfield, CT 06109

PROJECT TITLE:
REHABILITATION OF BRIDGE NO. 02295, ROUTE 136 OVER NORWALK RIVER

TOWN: **NORWALK**

DRAWING TITLE: **SPAN P-2 G5 DETERIORATION**

PROJECT NO. **173-462**
DRAWING NO. **S-29**
SHEET NO. **03.29**

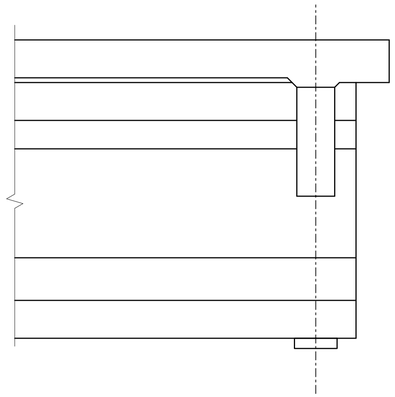

NORTH ELEVATION

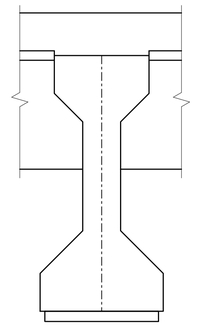

BEAM END

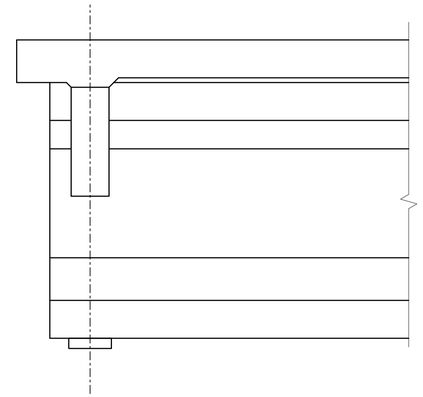

SOUTH ELEVATION

EXISTING CONDITION PIER NO. 2 SPAN P-2 G7

NOTE:

FOR NOTES AND BEAM REPAIR DETAILS SEE DWG. S-47.

LEGEND

- CRACK (HAIRLINE UNLESS DIMENSIONED OTHERWISE) (H.L.C.)
- SPALL AREA WITH EXPOSED REINFORCING (S.A. W/E.R.)
- SPALL AREA (S.A.)
- HOLLOW AREA (H.A.)
- SHALLOW REBAR (SH. A.)
- HONEY COMB AREA (H.C.A.)
- SCALE AREA (SC. A.)
- MAP CRACKS (MPCR)
- E EFFLORESCENCE (E)

KEY

F.H. = FULL HEIGHT
F.W. = FULL WIDTH
F.L. = FULL LENGTH
D.P. = DEEP

T.F. = TOP FLANGE
B.F. = BOTTOM FLANGE
L.R. = LAMINAR RUST
S.L. = SECTION LOSS
NEG. = NEGLIGIBLE
VT. = VERTICAL
C.P. = CONCRETE PATCH

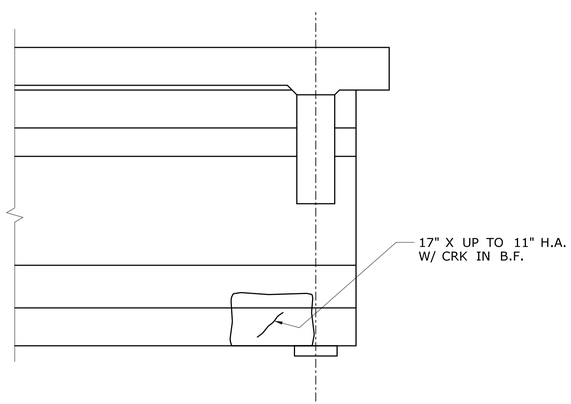

SOUTH ELEVATION

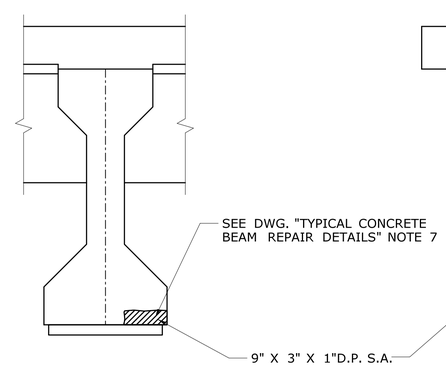

BEAM END

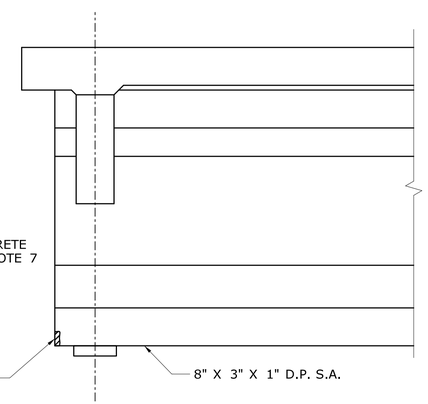

NORTH ELEVATION

EXISTING CONDITION PIER NO. 3 SPAN P-2 G7

REV.	DATE	REVISION DESCRIPTION	SHEET NO.

THE INFORMATION, INCLUDING ESTIMATED QUANTITIES OF WORK, SHOWN ON THESE SHEETS IS BASED ON LIMITED INVESTIGATIONS BY THE STATE AND IS IN NO WAY WARRANTED TO INDICATE THE CONDITIONS OF ACTUAL QUANTITIES OF WORK WHICH WILL BE REQUIRED.

Plotted Date: 9/25/2018

DESIGNER/DRAFTER: B.A./S.C.
CHECKED BY: J.H.M. II
SCALE: 3/4" = 1'-0"

STATE OF CONNECTICUT
DEPARTMENT OF TRANSPORTATION

Filename: ...\SB_MSH_173_462_BR02295_S-30_BEAM_DETER-P2- G7.dgn

SIGNATURE/BLOCK:
Close, Jensen and Miller, P.C.
1137 Silas Deane Highway
Wethersfield, CT 06109

PROJECT TITLE:
REHABILITATION OF BRIDGE NO. 02295, ROUTE 136 OVER NORWALK RIVER

TOWN: **NORWALK**

DRAWING TITLE: **SPAN P-2 G7 DETERIORATION**

PROJECT NO. 173-462
DRAWING NO. S-30
SHEET NO. 03.30

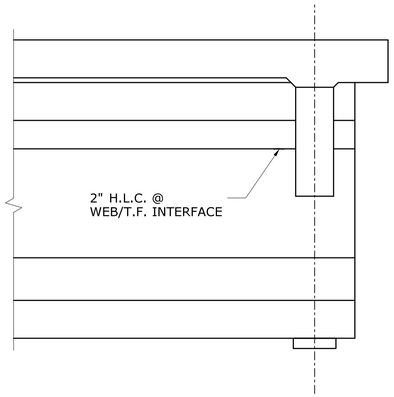

NORTH ELEVATION

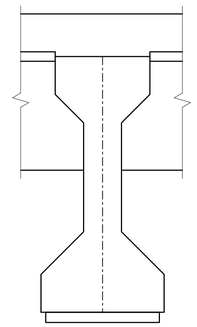

BEAM END

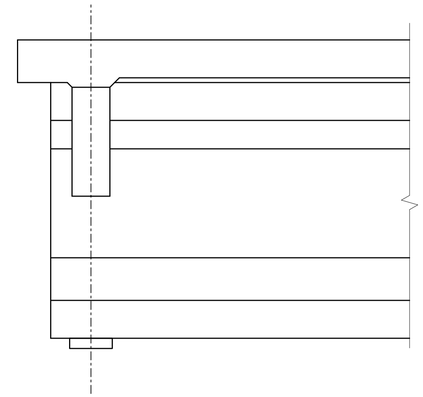

SOUTH ELEVATION

EXISTING CONDITION PIER NO. 2 SPAN P-2 G8

NOTE:

FOR NOTES AND BEAM REPAIR DETAILS SEE DWG. S-47.

LEGEND

- CRACK (HAIRLINE UNLESS DIMENSIONED OTHERWISE) (H.L.C.)
- SPALL AREA WITH EXPOSED REINFORCING (S.A. W/E.R.)
- SPALL AREA (S.A.)
- HOLLOW AREA (H.A.)
- SHALLOW REBAR (SH. A.)
- HONEY COMB AREA (H.C.A.)
- SCALE AREA (SC. A.)
- MAP CRACKS (MPCR)
- E EFFLORESCENCE (E)

KEY

F.H. = FULL HEIGHT
F.W. = FULL WIDTH
F.L. = FULL LENGTH
D.P. = DEEP

T.F. = TOP FLANGE
B.F. = BOTTOM FLANGE
L.R. = LAMINAR RUST
S.L. = SECTION LOSS
NEG. = NEGLIGIBLE
VT. = VERTICAL
C.P. = CONCRETE PATCH

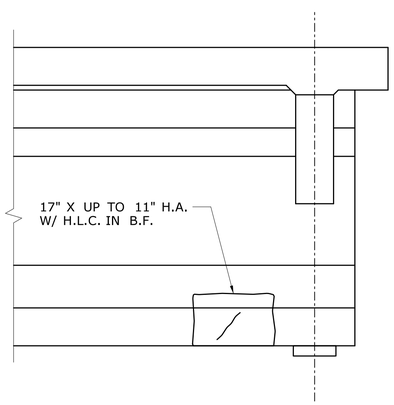

SOUTH ELEVATION

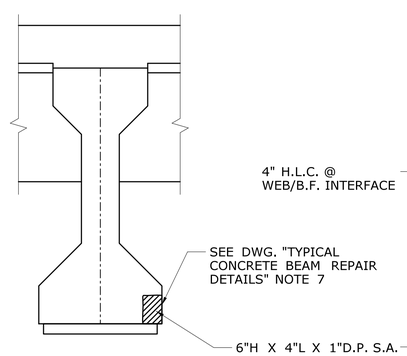

BEAM END

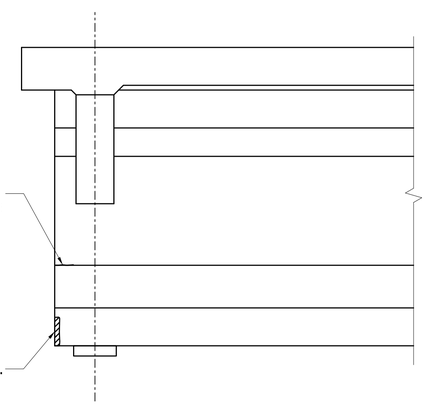

NORTH ELEVATION

EXISTING CONDITION PIER NO. 3 SPAN P-2 G8

REV.	DATE	REVISION DESCRIPTION	SHEET NO.

THE INFORMATION, INCLUDING ESTIMATED QUANTITIES OF WORK, SHOWN ON THESE SHEETS IS BASED ON LIMITED INVESTIGATIONS BY THE STATE AND IS IN NO WAY WARRANTED TO INDICATE THE CONDITIONS OF ACTUAL QUANTITIES OF WORK WHICH WILL BE REQUIRED.

Plotted Date: 9/25/2018

DESIGNER/DRAFTER: B.A./S.C.
CHECKED BY: J.H.M. II
SCALE: 3/4" = 1'-0"

STATE OF CONNECTICUT
DEPARTMENT OF TRANSPORTATION

Filename: ...\SB_MSH_173_462_BR02295_S-31_BEAM_DETER-P2-G8.dgn

SIGNATURE/BLOCK:
Close, Jensen and Miller, P.C.
1137 Silas Deane Highway
Wethersfield, CT 06109

PROJECT TITLE:
REHABILITATION OF BRIDGE NO. 02295, ROUTE 136 OVER NORWALK RIVER

TOWN: **NORWALK**

DRAWING TITLE: **SPAN P-2 G8 DETERIORATION**

PROJECT NO. 173-462
DRAWING NO. S-31
SHEET NO. 03.31

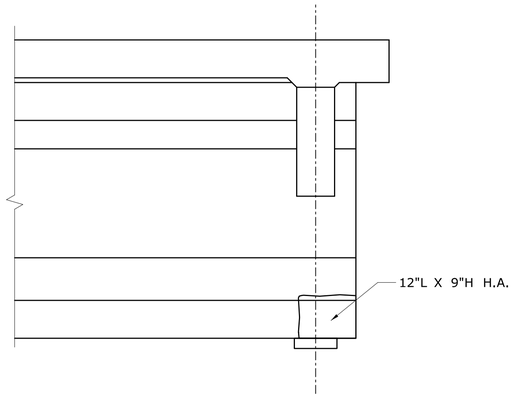

NORTH ELEVATION

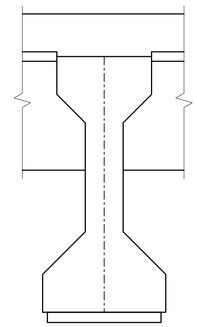

BEAM END

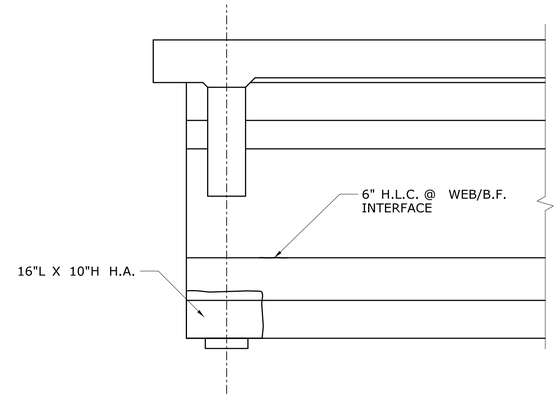

SOUTH ELEVATION

EXISTING CONDITION PIER NO. 2 SPAN P-2 G9

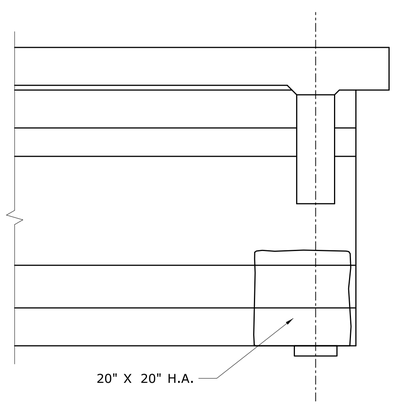

SOUTH ELEVATION

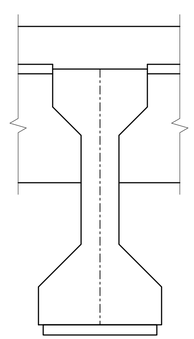

BEAM END

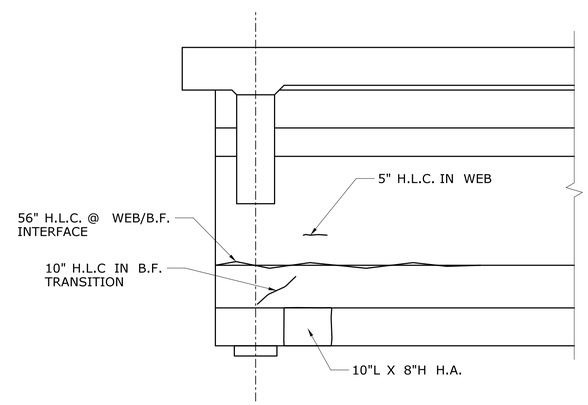

NORTH ELEVATION

EXISTING CONDITION PIER NO. 3 SPAN P-2 G9

NOTE:

FOR NOTES AND BEAM REPAIR DETAILS SEE DWG. S-47.

LEGEND

- CRACK (HAIRLINE UNLESS DIMENSIONED OTHERWISE) (H.L.C.)
- SPALL AREA WITH EXPOSED REINFORCING (S.A. W/E.R.)
- SPALL AREA (S.A.)
- HOLLOW AREA (H.A.)
- SHALLOW REBAR (SH. A.)
- HONEY COMB AREA (H.C.A.)
- SCALE AREA (SC. A.)
- MAP CRACKS (MPCR)
- E EFFLORESCENCE (E)

KEY

F.H. = FULL HEIGHT
F.W. = FULL WIDTH
F.L. = FULL LENGTH
D.P. = DEEP

T.F. = TOP FLANGE
B.F. = BOTTOM FLANGE
L.R. = LAMINAR RUST
S.L. = SECTION LOSS
NEG. = NEGLIGIBLE
VT. = VERTICAL
C.P. = CONCRETE PATCH

REV.	DATE	REVISION DESCRIPTION	SHEET NO.

THE INFORMATION, INCLUDING ESTIMATED QUANTITIES OF WORK, SHOWN ON THESE SHEETS IS BASED ON LIMITED INVESTIGATIONS BY THE STATE AND IS IN NO WAY WARRANTED TO INDICATE THE CONDITIONS OF ACTUAL QUANTITIES OF WORK WHICH WILL BE REQUIRED.

Plotted Date: 9/25/2018

DESIGNER/DRAFTER: B.A./S.C.
CHECKED BY: J.H.M. II
SCALE: 3/4" = 1'-0"

STATE OF CONNECTICUT
DEPARTMENT OF TRANSPORTATION

Filename: ...\SB_MSH_173_462_BR02295_S-32_BEAM_DETER-P2-G9.dgn

SIGNATURE/BLOCK:
Close, Jensen and Miller, P.C.
1137 Silas Deane Highway
Wethersfield, CT 06109

PROJECT TITLE:
REHABILITATION OF BRIDGE NO. 02295, ROUTE 136 OVER NORWALK RIVER

TOWN: **NORWALK**

DRAWING TITLE: **SPAN P-2 G9 DETERIORATION**

PROJECT NO. 173-462
DRAWING NO. S-32
SHEET NO. 03.32

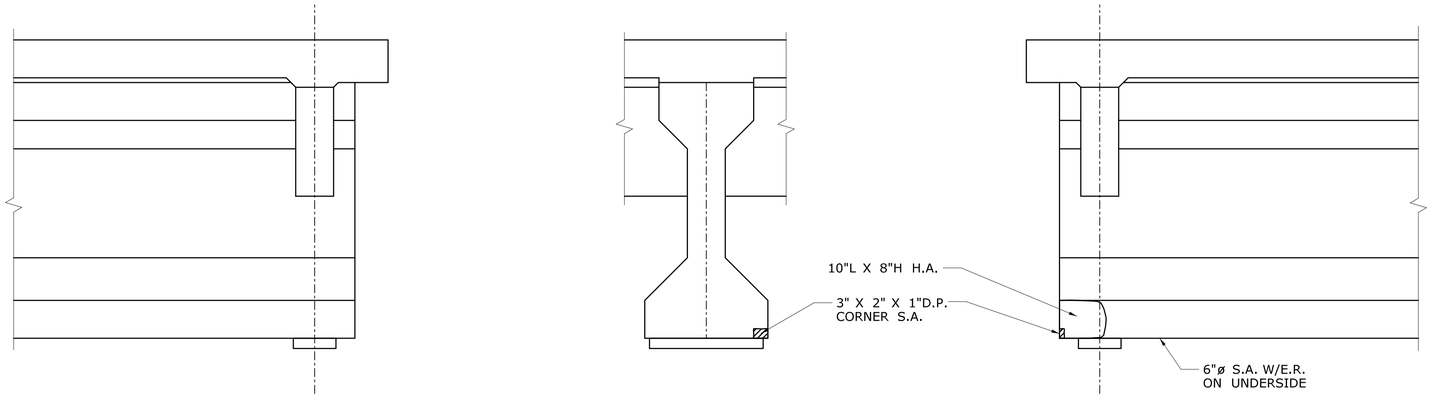

NORTH ELEVATION **BEAM END** **SOUTH ELEVATION**

EXISTING CONDITION PIER NO. 2 SPAN P-2 G10

NOTE:

FOR NOTES AND BEAM REPAIR DETAILS SEE DWG. S-47.

LEGEND

- CRACK (HAIRLINE UNLESS DIMENSIONED OTHERWISE) (H.L.C.)
- SPALL AREA WITH EXPOSED REINFORCING (S.A. W/E.R.)
- SPALL AREA (S.A.)
- HOLLOW AREA (H.A.)
- SHALLOW REBAR (SH. A.)
- HONEY COMB AREA (H.C.A.)
- SCALE AREA (SC. A.)
- MAP CRACKS (MPCR)
- E EFFLORESCENCE (E)

KEY

F.H. = FULL HEIGHT
F.W. = FULL WIDTH
F.L. = FULL LENGTH
D.P. = DEEP

T.F. = TOP FLANGE
B.F. = BOTTOM FLANGE
L.R. = LAMINAR RUST
S.L. = SECTION LOSS
NEG. = NEGLIGIBLE
VT. = VERTICAL
C.P. = CONCRETE PATCH

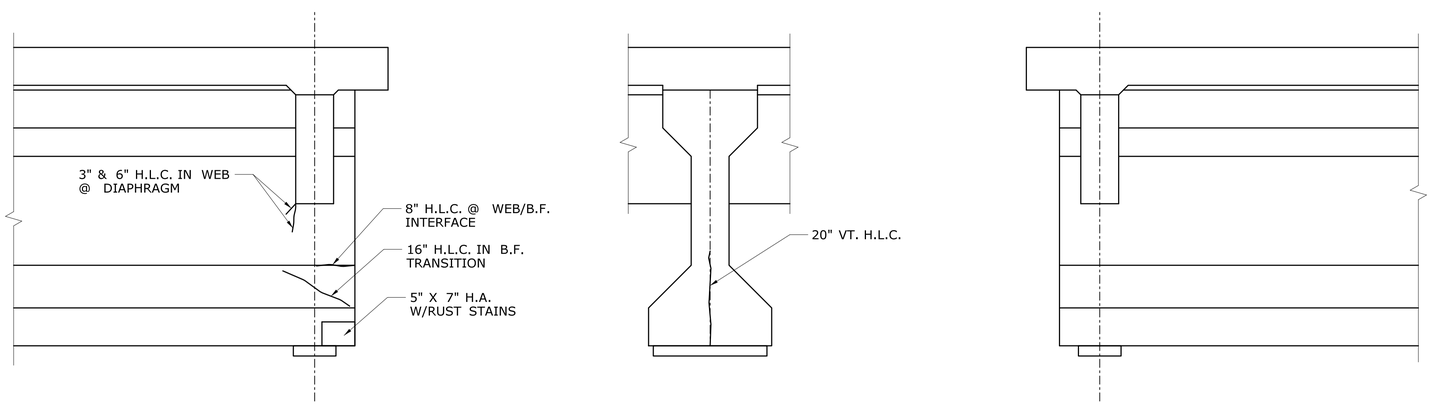

SOUTH ELEVATION **BEAM END** **NORTH ELEVATION**

EXISTING CONDITION PIER NO. 3 SPAN P-2 G10

REV.	DATE	REVISION DESCRIPTION	SHEET NO.

THE INFORMATION, INCLUDING ESTIMATED QUANTITIES OF WORK, SHOWN ON THESE SHEETS IS BASED ON LIMITED INVESTIGATIONS BY THE STATE AND IS IN NO WAY WARRANTED TO INDICATE THE CONDITIONS OF ACTUAL QUANTITIES OF WORK WHICH WILL BE REQUIRED.

Plotted Date: 9/25/2018

DESIGNER/DRAFTER: B.A./S.C.
CHECKED BY: J.H.M. II
SCALE: 3/4" = 1'-0"

STATE OF CONNECTICUT
DEPARTMENT OF TRANSPORTATION

Filename: ...\SB_MSH_173_462_BR02295_S-33_BEAM_DETER-P2-G10.dgn

SIGNATURE/ BLOCK:
Close, Jensen and Miller, P.C.
1137 Silas Deane Highway
Wethersfield, CT 06109

PROJECT TITLE:
REHABILITATION OF BRIDGE NO. 02295, ROUTE 136 OVER NORWALK RIVER

TOWN: **NORWALK**

DRAWING TITLE: **SPAN P-2 G10 DETERIORATION**

PROJECT NO. 173-462
DRAWING NO. S-33
SHEET NO. 03.33

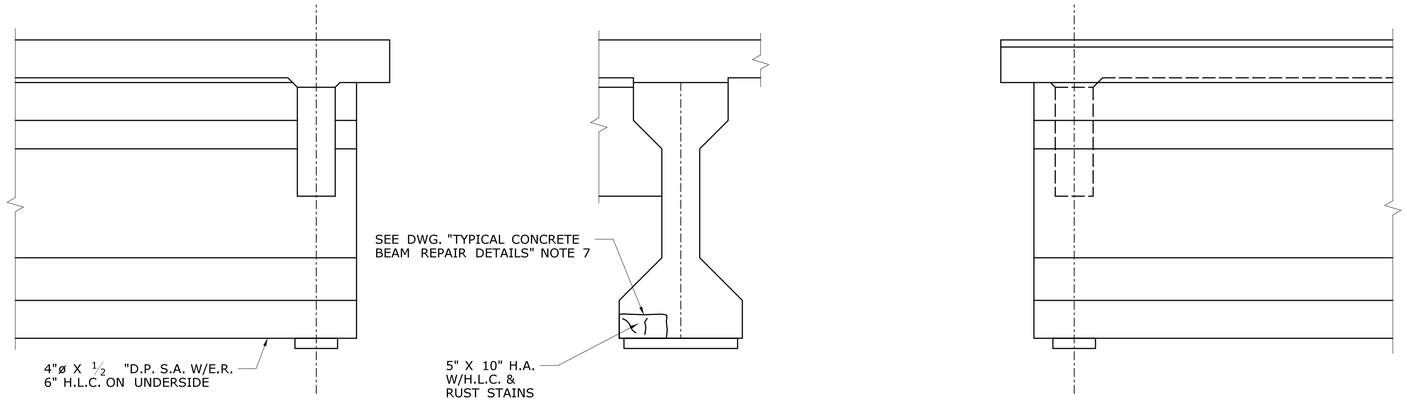

NORTH ELEVATION **BEAM END** **SOUTH ELEVATION**

EXISTING CONDITION PIER NO. 2 SPAN P-2 G11

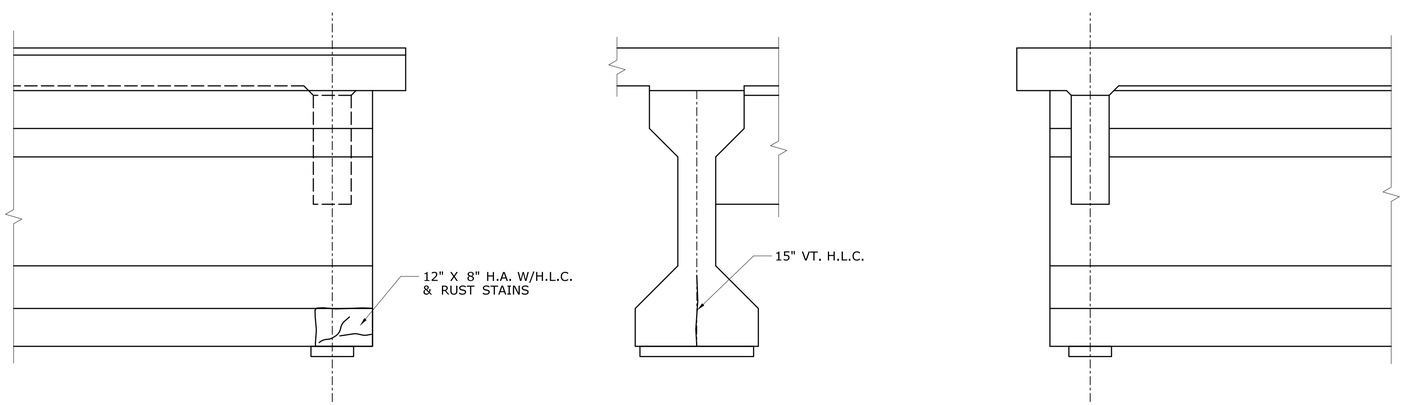

SOUTH ELEVATION **BEAM END** **NORTH ELEVATION**

EXISTING CONDITION PIER NO. 3 SPAN P-2 G11

NOTE:

FOR NOTES AND BEAM REPAIR DETAILS SEE DWG. S-47.

LEGEND

- CRACK (HAIRLINE UNLESS DIMENSIONED OTHERWISE) (H.L.C.)
- SPALL AREA WITH EXPOSED REINFORCING (S.A. W/E.R.)
- SPALL AREA (S.A.)
- HOLLOW AREA (H.A.)
- SHALLOW REBAR (SH. A.)
- HONEY COMB AREA (H.C.A.)
- SCALE AREA (SC. A.)
- MAP CRACKS (MPCR)
- E EFFLORESCENCE (E)

KEY

F.H. = FULL HEIGHT
F.W. = FULL WIDTH
F.L. = FULL LENGTH
D.P. = DEEP

T.F. = TOP FLANGE
B.F. = BOTTOM FLANGE
L.R. = LAMINAR RUST
S.L. = SECTION LOSS
NEG. = NEGLIGIBLE
VT. = VERTICAL
C.P. = CONCRETE PATCH

REV.	DATE	REVISION DESCRIPTION	SHEET NO.

THE INFORMATION, INCLUDING ESTIMATED QUANTITIES OF WORK, SHOWN ON THESE SHEETS IS BASED ON LIMITED INVESTIGATIONS BY THE STATE AND IS IN NO WAY WARRANTED TO INDICATE THE CONDITIONS OF ACTUAL QUANTITIES OF WORK WHICH WILL BE REQUIRED.

Plotted Date: 9/25/2018

DESIGNER/DRAFTER: B.A./S.C.
CHECKED BY: J.H.M. II
SCALE: ¾" = 1'-0"

STATE OF CONNECTICUT
DEPARTMENT OF TRANSPORTATION

Filename: ...\SB_MSH_173_462_BR02295_S-34_BEAM_DETER-P2-G11.dgn

SIGNATURE/BLOCK:
Close, Jensen and Miller, P.C.
1137 Silas Deane Highway
Wethersfield, CT 06109

PROJECT TITLE:
REHABILITATION OF BRIDGE NO. 02295, ROUTE 136 OVER NORWALK RIVER

TOWN: **NORWALK**

DRAWING TITLE: **SPAN P-2 G11 DETERIORATION**

PROJECT NO. 173-462
DRAWING NO. S-34
SHEET NO. 03.34

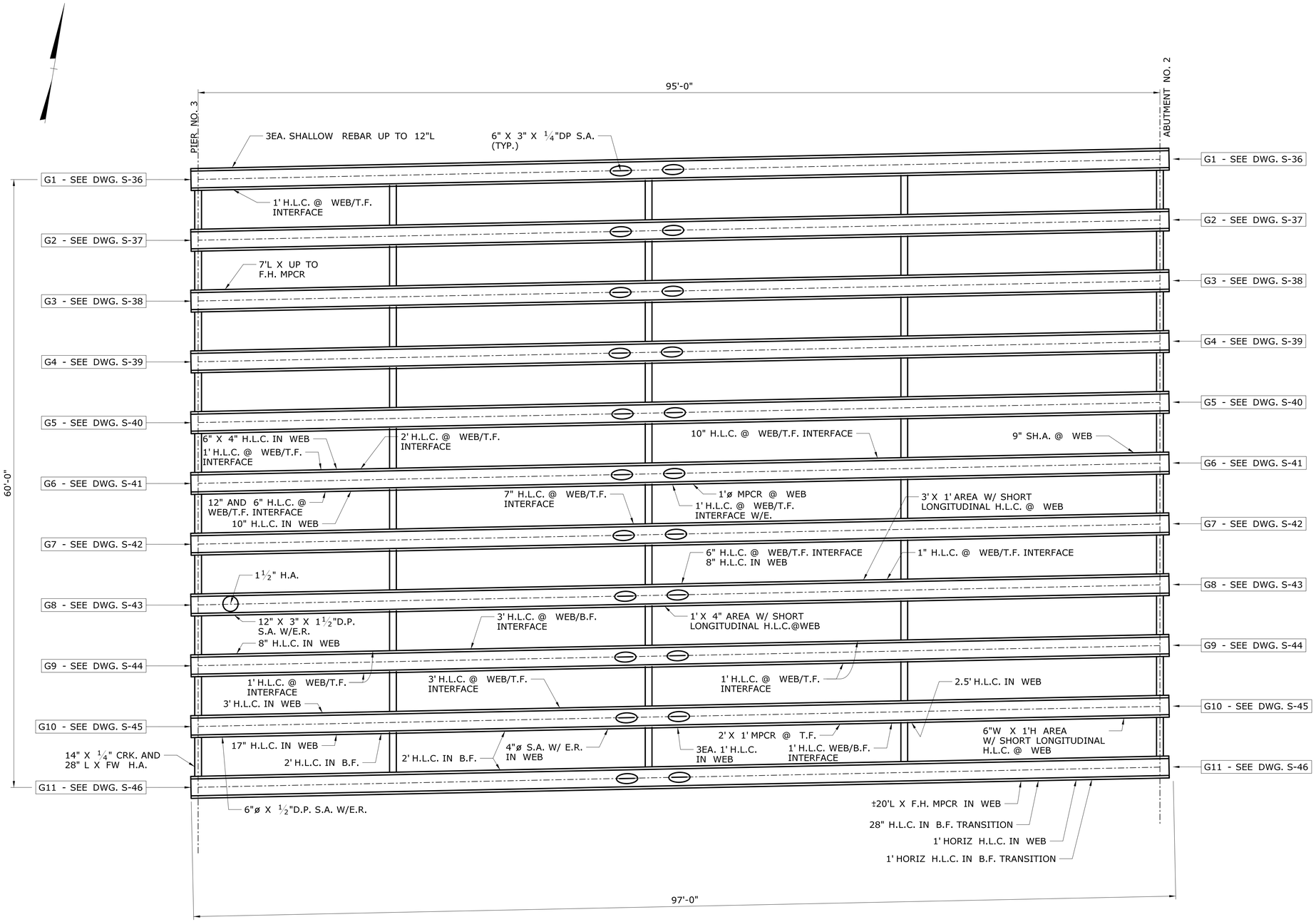

SPAN P-3 FRAMING PLAN

LEGEND

- CRACK (HAIRLINE UNLESS DIMENSIONED OTHERWISE) (H.L.C.)
- SPALL AREA WITH EXPOSED REINFORCING (S.A. W/E.R.)
- SPALL AREA (S.A.)
- HOLLOW AREA (H.A.)
- SHALLOW REBAR (SH. A.)
- HONEY COMB AREA (H.C.A.)
- SCALE AREA (SC. A.)
- MAP CRACKS (MPCR)
- E EFFLORESCENCE (E)

KEY

F.H. = FULL HEIGHT
F.W. = FULL WIDTH
F.L. = FULL LENGTH
D.P. = DEEP

T.F. = TOP FLANGE
B.F. = BOTTOM FLANGE
L.R. = LAMINAR RUST
S.L. = SECTION LOSS
NEG. = NEGLIGIBLE
VT. = VERTICAL

REV.	DATE	REVISION DESCRIPTION	SHEET NO.

THE INFORMATION, INCLUDING ESTIMATED QUANTITIES OF WORK, SHOWN ON THESE SHEETS IS BASED ON LIMITED INVESTIGATIONS BY THE STATE AND IS IN NO WAY WARRANTED TO INDICATE THE CONDITIONS OF ACTUAL QUANTITIES OF WORK WHICH WILL BE REQUIRED.

Plotted Date: 9/25/2018

DESIGNER/DRAFTER: B.A./S.C.
CHECKED BY: J.H.M. II

STATE OF CONNECTICUT
DEPARTMENT OF TRANSPORTATION

Filename: ...\SB_MSH_173_462_BR02295_S-35_FRAM_SPAN-P-3.dgn

SIGNATURE/BLOCK:
Close, Jensen and Miller, P.C.
1137 Silas Deane Highway
Wethersfield, CT 06109

PROJECT TITLE:
REHABILITATION OF BRIDGE NO. 02295, ROUTE 136 OVER NORWALK RIVER

TOWN: NORWALK

DRAWING TITLE: SPAN P-3 FRAMING PLAN

PROJECT NO. 173-462
DRAWING NO. S-35
SHEET NO. 03.35

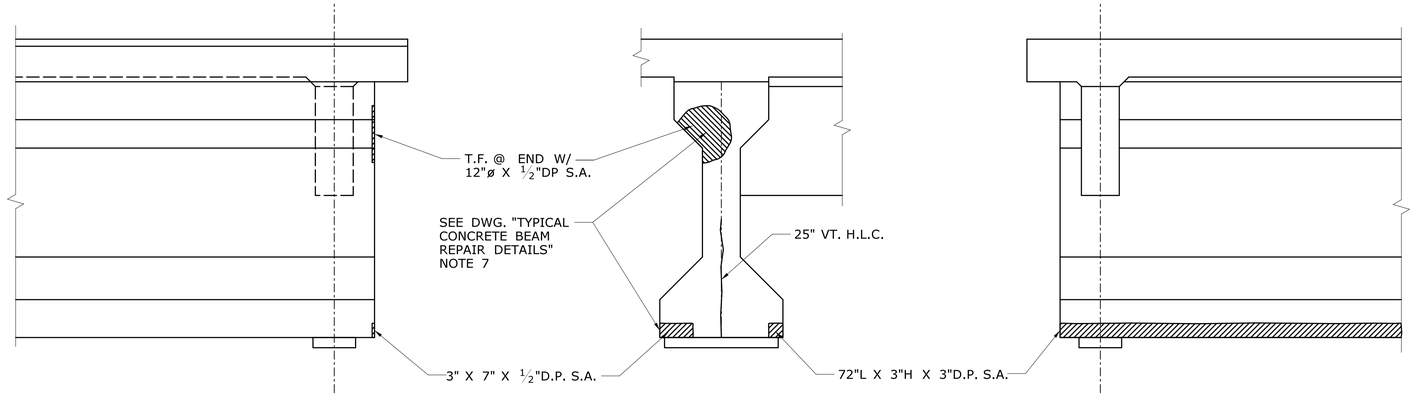

NORTH ELEVATION **BEAM END** **SOUTH ELEVATION**

EXISTING CONDITION PIER NO. 3 SPAN P-3 G1

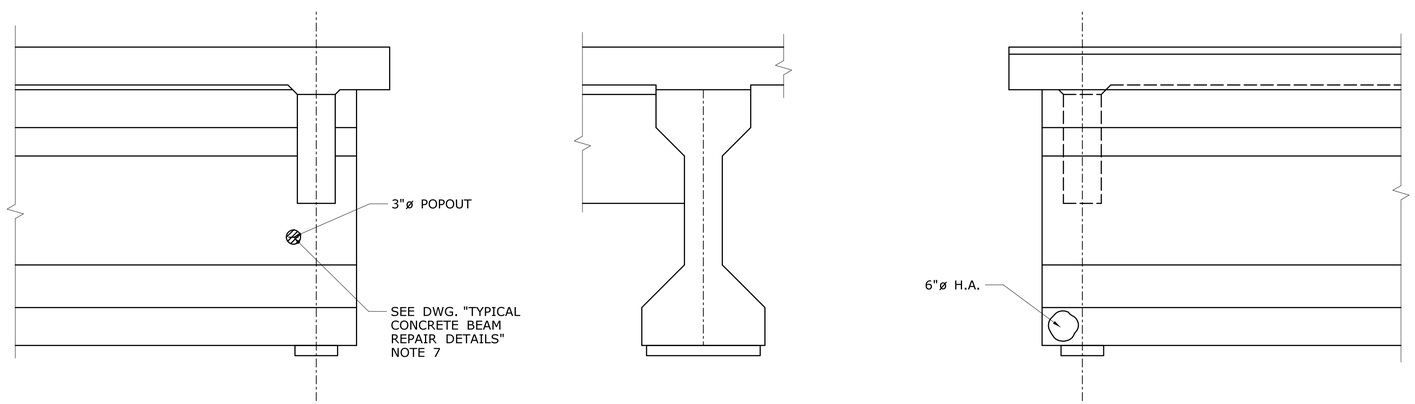

SOUTH ELEVATION **BEAM END** **NORTH ELEVATION**

EXISTING CONDITION ABUTMENT NO. 2 SPAN P-3 G1

NOTE:

FOR NOTES AND BEAM REPAIR DETAILS SEE DWG. S-47.

LEGEND

- CRACK (HAIRLINE UNLESS DIMENSIONED OTHERWISE) (H.L.C.)
- SPALL AREA WITH EXPOSED REINFORCING (S.A. W/E.R.)
- SPALL AREA (S.A.)
- HOLLOW AREA (H.A.)
- SHALLOW REBAR (SH. A.)
- HONEY COMB AREA (H.C.A.)
- SCALE AREA (SC. A.)
- MAP CRACKS (MPCR)
- E EFFLORESCENCE (E)

KEY

F.H. = FULL HEIGHT
F.W. = FULL WIDTH
F.L. = FULL LENGTH
D.P. = DEEP

T.F. = TOP FLANGE
B.F. = BOTTOM FLANGE
L.R. = LAMINAR RUST
S.L. = SECTION LOSS
NEG. = NEGLIGIBLE
VT. = VERTICAL
C.P. = CONCRETE PATCH

REV.	DATE	REVISION DESCRIPTION	SHEET NO.

THE INFORMATION, INCLUDING ESTIMATED QUANTITIES OF WORK, SHOWN ON THESE SHEETS IS BASED ON LIMITED INVESTIGATIONS BY THE STATE AND IS IN NO WAY WARRANTED TO INDICATE THE CONDITIONS OF ACTUAL QUANTITIES OF WORK WHICH WILL BE REQUIRED.

Plotted Date: 9/25/2018

DESIGNER/DRAFTER: B.A./S.C.
CHECKED BY: J.H.M. II
SCALE: ¾" = 1'-0"

STATE OF CONNECTICUT
DEPARTMENT OF TRANSPORTATION

Filename: ...\SB_MSH_173_462_BR02295_S-36_BEAM_DETER-P3-G1.dgn

SIGNATURE/BLOCK:
Close, Jensen and Miller, P.C.
1137 Silas Deane Highway
Wethersfield, CT 06109

PROJECT TITLE:
REHABILITATION OF BRIDGE NO. 02295, ROUTE 136 OVER NORWALK RIVER

TOWN: **NORWALK**

DRAWING TITLE: **SPAN P-3 G1 DETERIORATION**

PROJECT NO. 173-462
DRAWING NO. S-36
SHEET NO. 03.36

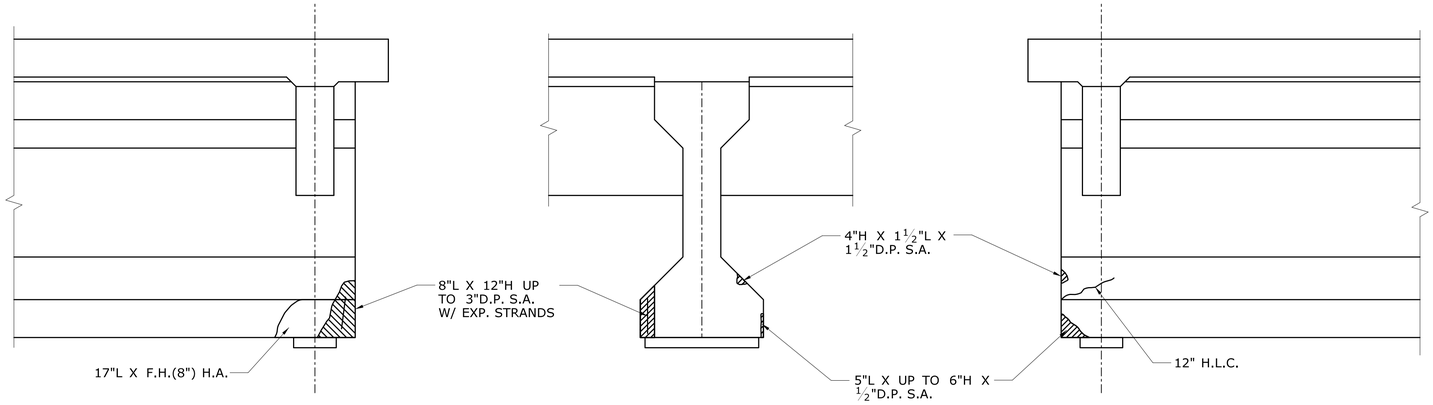

NORTH ELEVATION **BEAM END** **SOUTH ELEVATION**

EXISTING CONDITION PIER NO. 3 SPAN P-3 G2

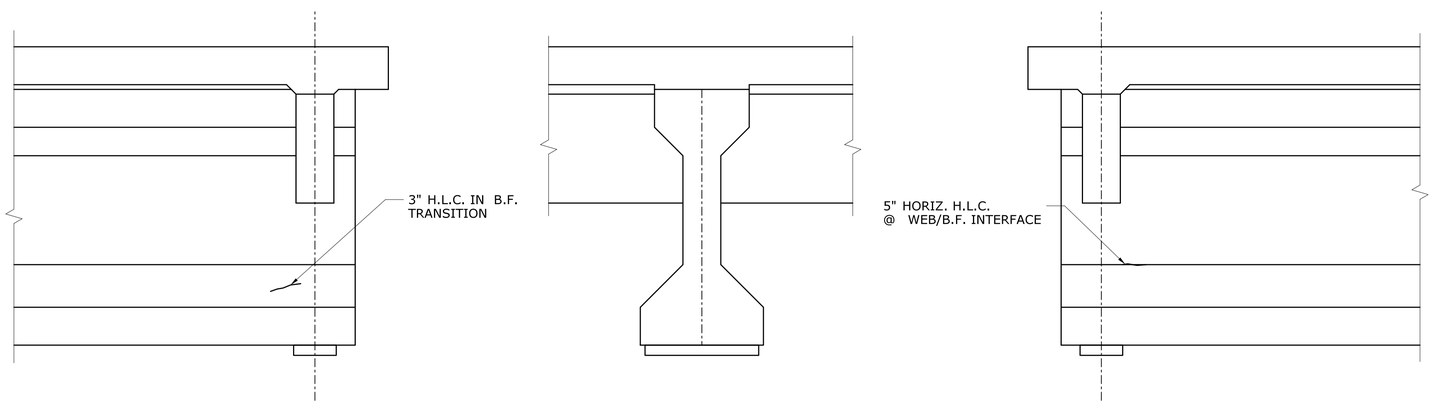

SOUTH ELEVATION **BEAM END** **NORTH ELEVATION**

EXISTING CONDITION ABUTMENT NO. 2 SPAN P-3 G2

NOTE:

FOR NOTES AND BEAM REPAIR DETAILS SEE DWG. S-47.

LEGEND

- CRACK (HAIRLINE UNLESS DIMENSIONED OTHERWISE) (H.L.C.)
- SPALL AREA WITH EXPOSED REINFORCING (S.A. W/E.R.)
- SPALL AREA (S.A.)
- HOLLOW AREA (H.A.)
- SHALLOW REBAR (SH. A.)
- HONEY COMB AREA (H.C.A.)
- SCALE AREA (SC. A.)
- MAP CRACKS (MPCR)
- E EFFLORESCENCE (E)

KEY

F.H. = FULL HEIGHT
F.W. = FULL WIDTH
F.L. = FULL LENGTH
D.P. = DEEP

T.F. = TOP FLANGE
B.F. = BOTTOM FLANGE
L.R. = LAMINAR RUST
S.L. = SECTION LOSS
NEG. = NEGLIGIBLE
VT. = VERTICAL
C.P. = CONCRETE PATCH

REV.	DATE	REVISION DESCRIPTION	SHEET NO.

THE INFORMATION, INCLUDING ESTIMATED QUANTITIES OF WORK, SHOWN ON THESE SHEETS IS BASED ON LIMITED INVESTIGATIONS BY THE STATE AND IS IN NO WAY WARRANTED TO INDICATE THE CONDITIONS OF ACTUAL QUANTITIES OF WORK WHICH WILL BE REQUIRED.

Plotted Date: 9/25/2018

DESIGNER/DRAFTER: B.A./S.C.
CHECKED BY: J.H.M. II
SCALE: ¾" = 1'-0"

STATE OF CONNECTICUT
DEPARTMENT OF TRANSPORTATION

Filename: ...\SB_MSH_173_462_BR02295_S-37_BEAM_DETER-P3-G2.dgn

SIGNATURE/ BLOCK:
Close, Jensen and Miller, P.C.
1137 Silas Deane Highway
Wethersfield, CT 06109

PROJECT TITLE:
REHABILITATION OF BRIDGE NO. 02295, ROUTE 136 OVER NORWALK RIVER

TOWN: **NORWALK**

DRAWING TITLE: **SPAN P-3 G2 DETERIORATION**

PROJECT NO. 173-462
DRAWING NO. S-37
SHEET NO. 03.37

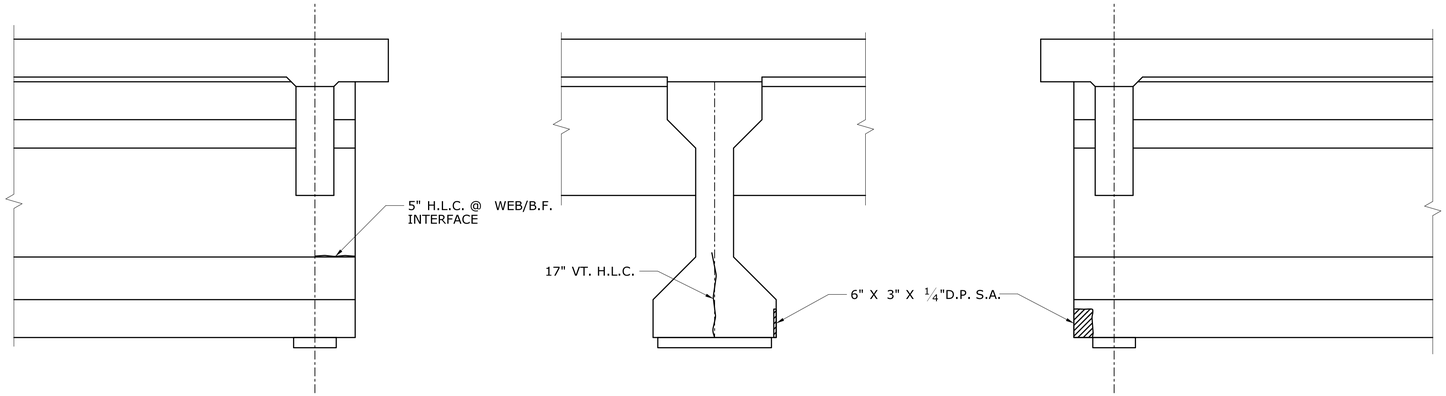

NORTH ELEVATION **BEAM END** **SOUTH ELEVATION**

EXISTING CONDITION PIER NO. 3 SPAN P-3 G3

NOTE:

FOR NOTES AND BEAM REPAIR DETAILS SEE DWG. S-47.

LEGEND

- CRACK (HAIRLINE UNLESS DIMENSIONED OTHERWISE) (H.L.C.)
- SPALL AREA WITH EXPOSED REINFORCING (S.A. W/E.R.)
- SPALL AREA (S.A.)
- HOLLOW AREA (H.A.)
- SHALLOW REBAR (SH. A.)
- HONEY COMB AREA (H.C.A.)
- SCALE AREA (SC. A.)
- MAP CRACKS (MPCR)
- E EFFLORESCENCE (E)

KEY

F.H. = FULL HEIGHT
F.W. = FULL WIDTH
F.L. = FULL LENGTH
D.P. = DEEP

T.F. = TOP FLANGE
B.F. = BOTTOM FLANGE
L.R. = LAMINAR RUST
S.L. = SECTION LOSS
NEG. = NEGLIGIBLE
VT. = VERTICAL
C.P. = CONCRETE PATCH

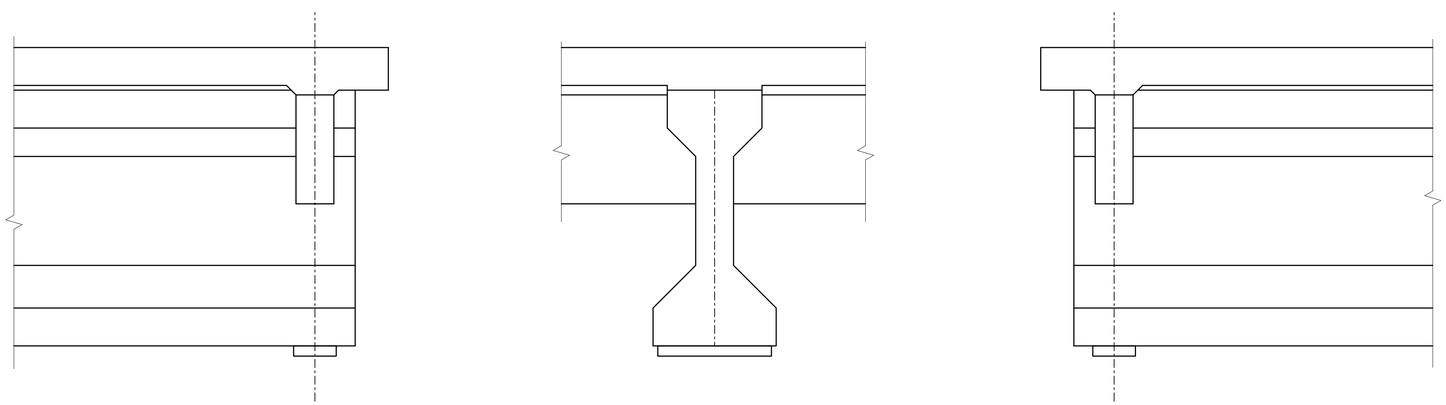

SOUTH ELEVATION **BEAM END** **NORTH ELEVATION**

EXISTING CONDITION ABUTMENT NO. 2 SPAN P-3 G3

REV.	DATE	REVISION DESCRIPTION	SHEET NO.

THE INFORMATION, INCLUDING ESTIMATED QUANTITIES OF WORK, SHOWN ON THESE SHEETS IS BASED ON LIMITED INVESTIGATIONS BY THE STATE AND IS IN NO WAY WARRANTED TO INDICATE THE CONDITIONS OF ACTUAL QUANTITIES OF WORK WHICH WILL BE REQUIRED.

Plotted Date: 9/25/2018

DESIGNER/DRAFTER: B.A./S.C.
CHECKED BY: J.H.M. II
SCALE: 3/4" = 1'-0"

STATE OF CONNECTICUT
DEPARTMENT OF TRANSPORTATION

Filename: ...\SB_MSH_173_462_BR02295_S-38_BEAM_DETER-P3-G3.dgn

SIGNATURE/ BLOCK:
Close, Jensen and Miller, P.C.
1137 Silas Deane Highway
Wethersfield, CT 06109

PROJECT TITLE:
REHABILITATION OF BRIDGE NO. 02295, ROUTE 136 OVER NORWALK RIVER

TOWN: **NORWALK**

DRAWING TITLE: **SPAN P-3 G3 DETERIORATION**

PROJECT NO. 173-462
DRAWING NO. S-38
SHEET NO. 03.38

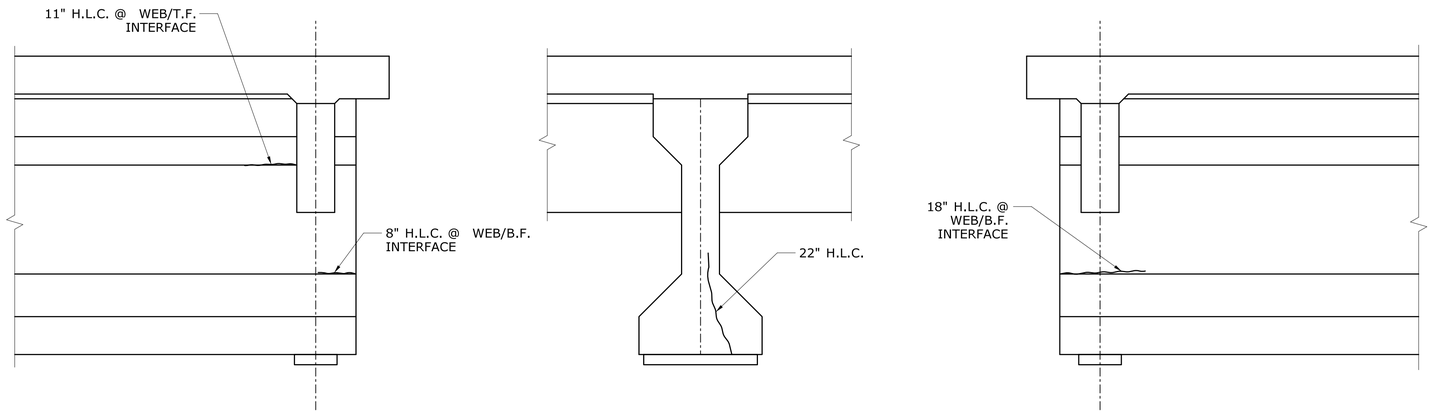

NORTH ELEVATION **BEAM END** **SOUTH ELEVATION**

EXISTING CONDITION PIER NO. 3 SPAN P-3 G4

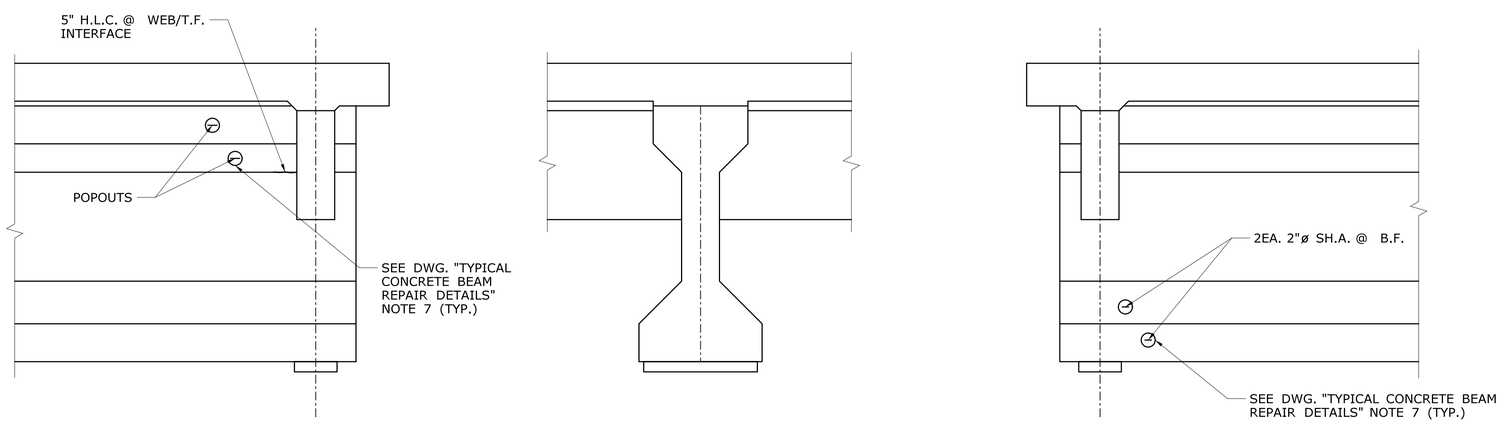

SOUTH ELEVATION **BEAM END** **NORTH ELEVATION**

EXISTING CONDITION ABUTMENT NO. 2 SPAN P-3 G4

NOTE:

FOR NOTES AND BEAM REPAIR DETAILS SEE DWG. S-47.

LEGEND

- CRACK (HAIRLINE UNLESS DIMENSIONED OTHERWISE) (H.L.C.)
- SPALL AREA WITH EXPOSED REINFORCING (S.A. W/E.R.)
- SPALL AREA (S.A.)
- HOLLOW AREA (H.A.)
- SHALLOW REBAR (SH. A.)
- HONEY COMB AREA (H.C.A.)
- SCALE AREA (SC. A.)
- MAP CRACKS (MPCR)
- E EFFLORESCENCE (E)

KEY

F.H. = FULL HEIGHT
F.W. = FULL WIDTH
F.L. = FULL LENGTH
D.P. = DEEP

T.F. = TOP FLANGE
B.F. = BOTTOM FLANGE
L.R. = LAMINAR RUST
S.L. = SECTION LOSS
NEG. = NEGLIGIBLE
VT. = VERTICAL
C.P. = CONCRETE PATCH

REV.	DATE	REVISION DESCRIPTION	SHEET NO.

THE INFORMATION, INCLUDING ESTIMATED QUANTITIES OF WORK, SHOWN ON THESE SHEETS IS BASED ON LIMITED INVESTIGATIONS BY THE STATE AND IS IN NO WAY WARRANTED TO INDICATE THE CONDITIONS OF ACTUAL QUANTITIES OF WORK WHICH WILL BE REQUIRED.

Plotted Date: 9/25/2018

DESIGNER/DRAFTER: B.A./S.C.
CHECKED BY: J.H.M. II
SCALE: 3/4" = 1'-0"

STATE OF CONNECTICUT
DEPARTMENT OF TRANSPORTATION

Filename: ...\SB_MSH_173_462_BR02295_S-39_BEAM_DETER-P3-G4.dgn

SIGNATURE/BLOCK:
Close, Jensen and Miller, P.C.
1137 Silas Deane Highway
Wethersfield, CT 06109

PROJECT TITLE:
REHABILITATION OF BRIDGE NO. 02295, ROUTE 136 OVER NORWALK RIVER

TOWN: **NORWALK**

DRAWING TITLE: **SPAN P-3 G4 DETERIORATION**

PROJECT NO. 173-462
DRAWING NO. S-39
SHEET NO. 03.39

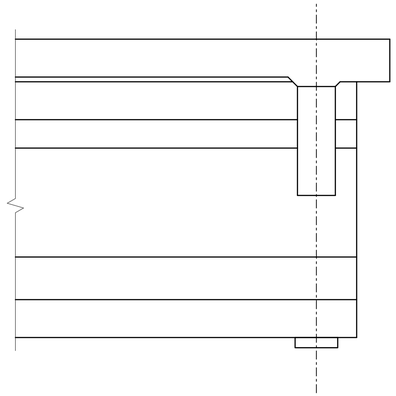

NORTH ELEVATION

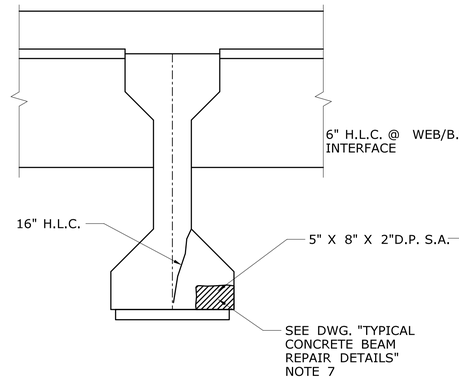

BEAM END

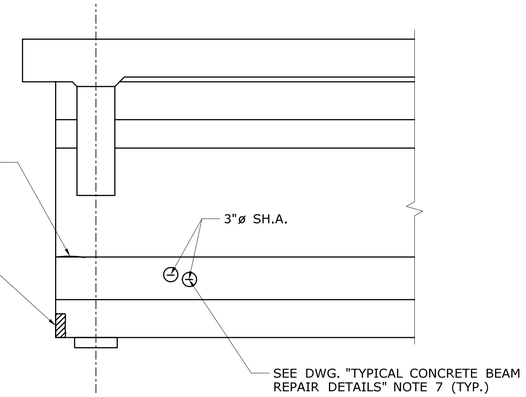

SOUTH ELEVATION

EXISTING CONDITION PIER NO. 3 SPAN P-3 G5

NOTE:

FOR NOTES AND BEAM REPAIR DETAILS SEE DWG. S-47.

LEGEND

- CRACK (HAIRLINE UNLESS DIMENSIONED OTHERWISE) (H.L.C.)
- SPALL AREA WITH EXPOSED REINFORCING (S.A. W/E.R.)
- SPALL AREA (S.A.)
- HOLLOW AREA (H.A.)
- SHALLOW REBAR (SH. A.)
- HONEY COMB AREA (H.C.A.)
- SCALE AREA (SC. A.)
- MAP CRACKS (MPCR)
- E EFFLORESCENCE (E)

KEY

F.H. = FULL HEIGHT
F.W. = FULL WIDTH
F.L. = FULL LENGTH
D.P. = DEEP

T.F. = TOP FLANGE
B.F. = BOTTOM FLANGE
L.R. = LAMINAR RUST
S.L. = SECTION LOSS
NEG. = NEGLIGIBLE
VT. = VERTICAL
C.P. = CONCRETE PATCH

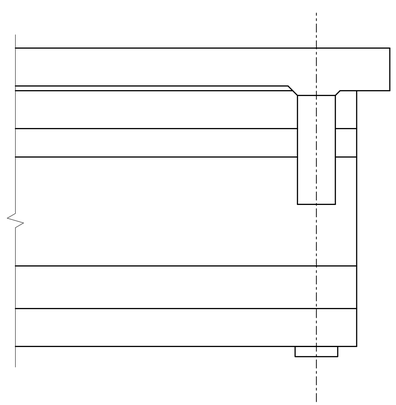

SOUTH ELEVATION

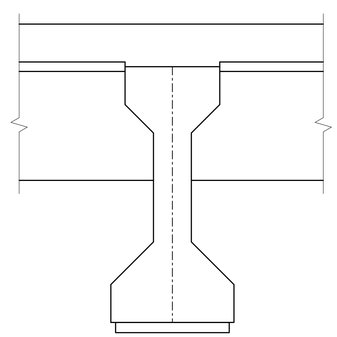

BEAM END

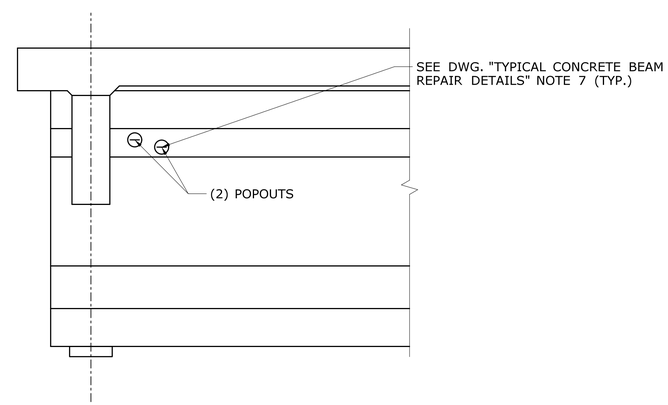

NORTH ELEVATION

EXISTING CONDITION ABUTMENT NO. 2 SPAN P-3 G5

REV.	DATE	REVISION DESCRIPTION	SHEET NO.

THE INFORMATION, INCLUDING ESTIMATED QUANTITIES OF WORK, SHOWN ON THESE SHEETS IS BASED ON LIMITED INVESTIGATIONS BY THE STATE AND IS IN NO WAY WARRANTED TO INDICATE THE CONDITIONS OF ACTUAL QUANTITIES OF WORK WHICH WILL BE REQUIRED.

Plotted Date: 9/25/2018

DESIGNER/DRAFTER: B.A./S.C.
CHECKED BY: J.H.M. II
SCALE: 3/4" = 1'-0"

STATE OF CONNECTICUT
DEPARTMENT OF TRANSPORTATION

Filename: ...\SB_MSH_173_462_BR02295_S-40_BEAM_DETER-P3-G5.dgn

SIGNATURE/BLOCK:
Close, Jensen and Miller, P.C.
1137 Silas Deane Highway
Wethersfield, CT 06109

PROJECT TITLE:
REHABILITATION OF BRIDGE NO. 02295, ROUTE 136 OVER NORWALK RIVER

TOWN: **NORWALK**

DRAWING TITLE: **SPAN P-3 G5 DETERIORATION**

PROJECT NO. 173-462
DRAWING NO. S-40
SHEET NO. 03.40

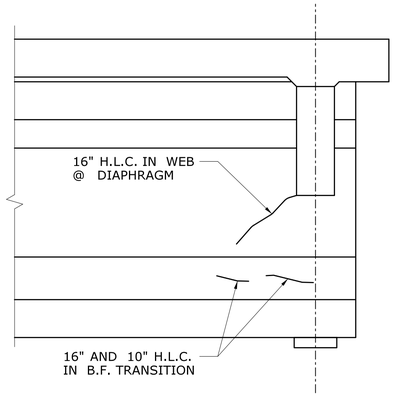

NORTH ELEVATION

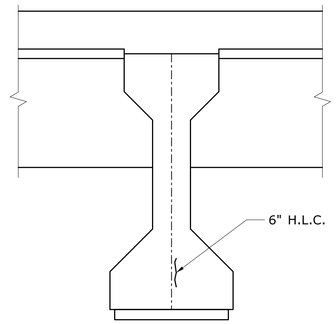

BEAM END

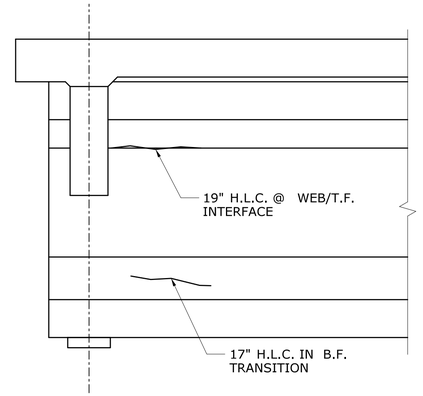

SOUTH ELEVATION

EXISTING CONDITION PIER NO. 3 SPAN P-3 G6

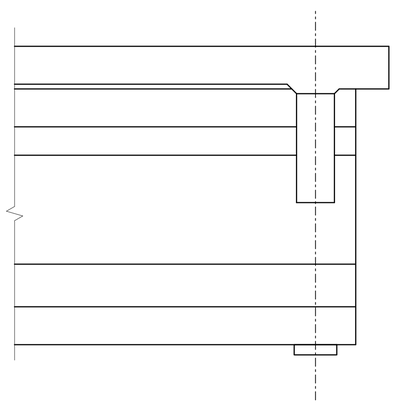

SOUTH ELEVATION

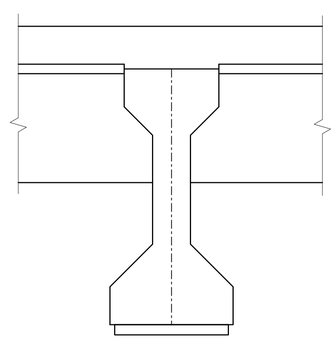

BEAM END

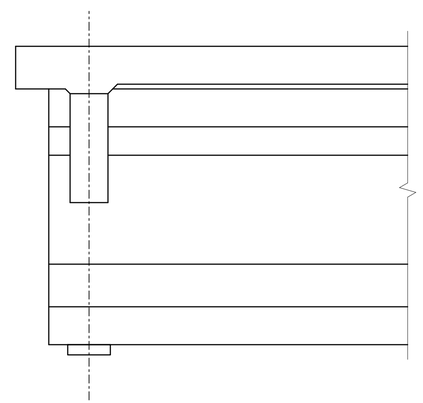

NORTH ELEVATION

EXISTING CONDITION ABUTMENT NO. 2 SPAN P-3 G6

NOTE:

FOR NOTES AND BEAM REPAIR DETAILS SEE DWG. S-47.

LEGEND

- CRACK (HAIRLINE UNLESS DIMENSIONED OTHERWISE) (H.L.C.)
- SPALL AREA WITH EXPOSED REINFORCING (S.A. W/E.R.)
- SPALL AREA (S.A.)
- HOLLOW AREA (H.A.)
- SHALLOW REBAR (SH. A.)
- HONEY COMB AREA (H.C.A.)
- SCALE AREA (SC. A.)
- MAP CRACKS (MPCR)
- E EFFLORESCENCE (E)

KEY

F.H. = FULL HEIGHT
F.W. = FULL WIDTH
F.L. = FULL LENGTH
D.P. = DEEP

T.F. = TOP FLANGE
B.F. = BOTTOM FLANGE
L.R. = LAMINAR RUST
S.L. = SECTION LOSS
NEG. = NEGLIGIBLE
VT. = VERTICAL
C.P. = CONCRETE PATCH

REV.	DATE	REVISION DESCRIPTION	SHEET NO.

THE INFORMATION, INCLUDING ESTIMATED QUANTITIES OF WORK, SHOWN ON THESE SHEETS IS BASED ON LIMITED INVESTIGATIONS BY THE STATE AND IS IN NO WAY WARRANTED TO INDICATE THE CONDITIONS OF ACTUAL QUANTITIES OF WORK WHICH WILL BE REQUIRED.

Plotted Date: 9/25/2018

DESIGNER/DRAFTER: B.A./S.C.
CHECKED BY: J.H.M. II
SCALE: 3/4" = 1'-0"

STATE OF CONNECTICUT
DEPARTMENT OF TRANSPORTATION

Filename: ...\SB_MSH_173_462_BR02295_S-41_BEAM_DETER-P3-G6.dgn

SIGNATURE/BLOCK:
Close, Jensen and Miller, P.C.
1137 Silas Deane Highway
Wethersfield, CT 06109

PROJECT TITLE:
REHABILITATION OF BRIDGE NO. 02295, ROUTE 136 OVER NORWALK RIVER

TOWN: **NORWALK**

DRAWING TITLE: **SPAN P-3 G6 DETERIORATION**

PROJECT NO. 173-462
DRAWING NO. S-41
SHEET NO. 03.41

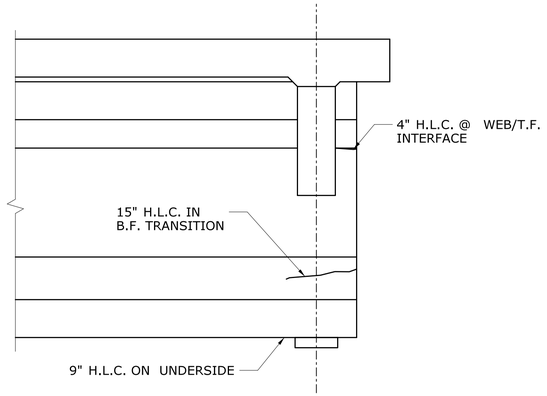

NORTH ELEVATION

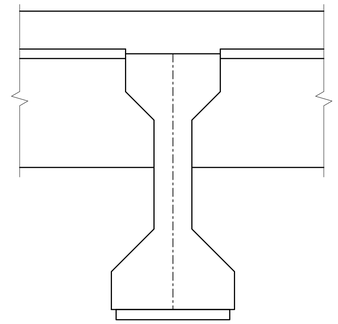

BEAM END

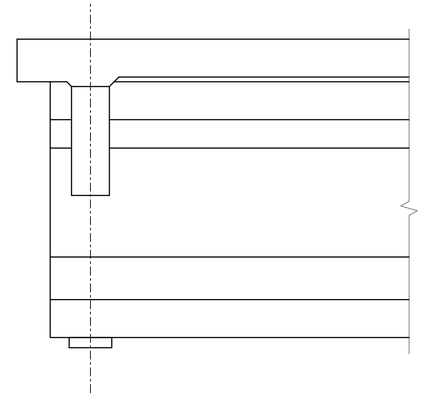

SOUTH ELEVATION

EXISTING CONDITION PIER NO. 3 SPAN P-3 G7

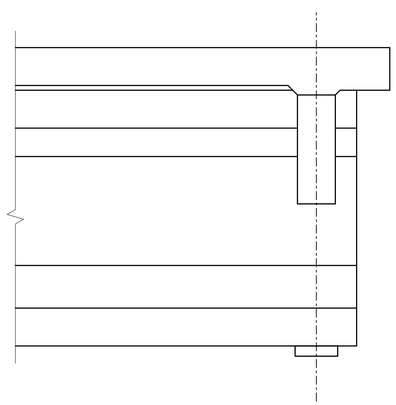

SOUTH ELEVATION

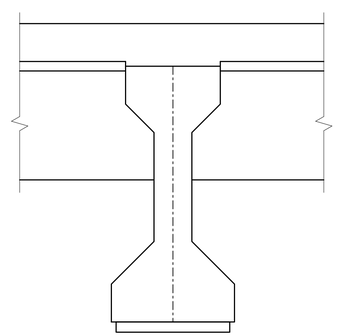

BEAM END

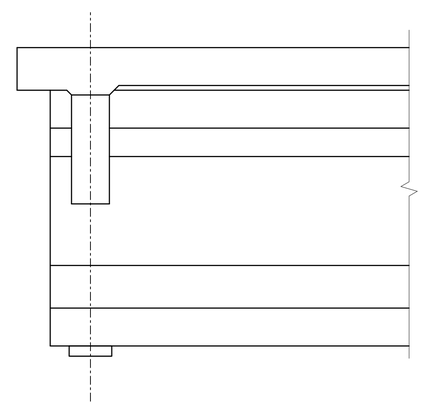

NORTH ELEVATION

EXISTING CONDITION ABUTMENT NO. 2 SPAN P-3 G7

NOTE:

FOR NOTES AND BEAM REPAIR DETAILS SEE DWG. S-47.

LEGEND

- CRACK (HAIRLINE UNLESS DIMENSIONED OTHERWISE) (H.L.C.)
- SPALL AREA WITH EXPOSED REINFORCING (S.A. W/E.R.)
- SPALL AREA (S.A.)
- HOLLOW AREA (H.A.)
- SHALLOW REBAR (SH. A.)
- HONEY COMB AREA (H.C.A.)
- SCALE AREA (SC. A.)
- MAP CRACKS (MPCR)
- E EFFLORESCENCE (E)

KEY

F.H. = FULL HEIGHT
F.W. = FULL WIDTH
F.L. = FULL LENGTH
D.P. = DEEP

T.F. = TOP FLANGE
B.F. = BOTTOM FLANGE
L.R. = LAMINAR RUST
S.L. = SECTION LOSS
NEG. = NEGLIGIBLE
VT. = VERTICAL
C.P. = CONCRETE PATCH

REV.	DATE	REVISION DESCRIPTION	SHEET NO.

THE INFORMATION, INCLUDING ESTIMATED QUANTITIES OF WORK, SHOWN ON THESE SHEETS IS BASED ON LIMITED INVESTIGATIONS BY THE STATE AND IS IN NO WAY WARRANTED TO INDICATE THE CONDITIONS OF ACTUAL QUANTITIES OF WORK WHICH WILL BE REQUIRED.

Plotted Date: 9/25/2018

DESIGNER/DRAFTER: B.A./S.C.
CHECKED BY: J.H.M. II
SCALE: 3/4" = 1'-0"

STATE OF CONNECTICUT
DEPARTMENT OF TRANSPORTATION

Filename: ...\SB_MSH_173_462_BR02295_S-42_BEAM_DETER-P3-G7.dgn

SIGNATURE/BLOCK:
Close, Jensen and Miller, P.C.
1137 Silas Deane Highway
Wethersfield, CT 06109

PROJECT TITLE:
REHABILITATION OF BRIDGE NO. 02295, ROUTE 136 OVER NORWALK RIVER

TOWN: **NORWALK**

DRAWING TITLE: **SPAN P-3 G7 DETERIORATION**

PROJECT NO. 173-462
DRAWING NO. S-42
SHEET NO. 03.42

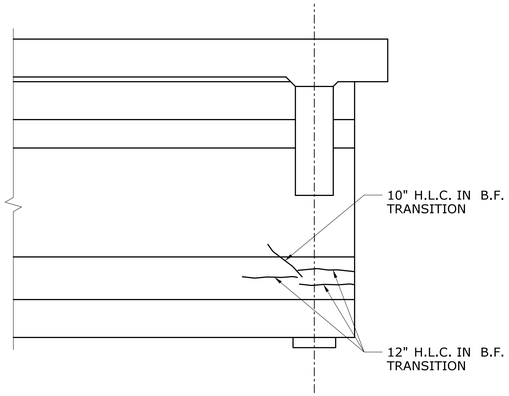

NORTH ELEVATION

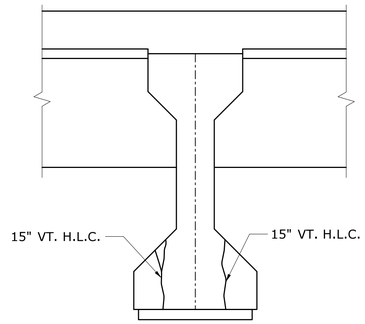

BEAM END

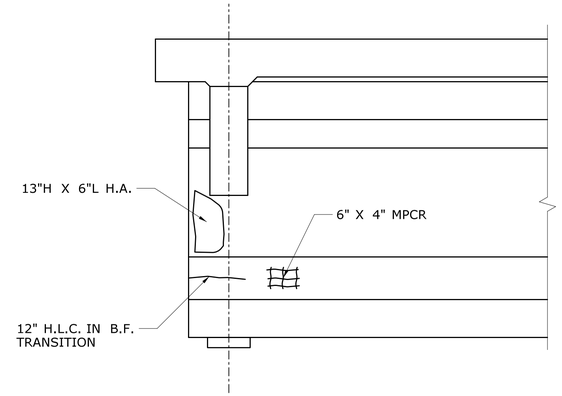

SOUTH ELEVATION

EXISTING CONDITION PIER NO. 3 SPAN P-3 G8

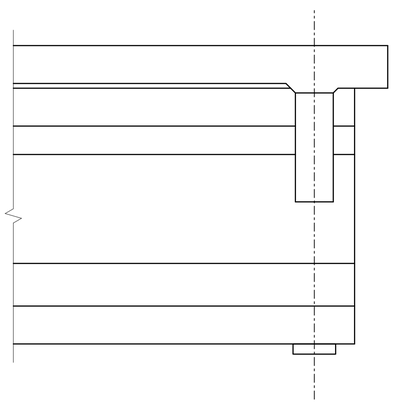

SOUTH ELEVATION

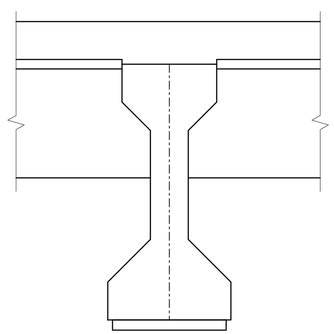

BEAM END

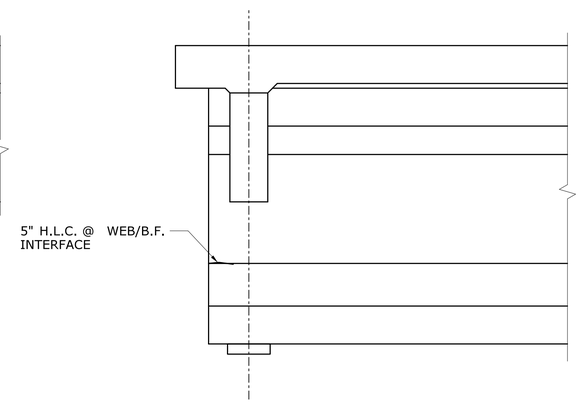

NORTH ELEVATION

EXISTING CONDITION ABUTMENT NO. 2 SPAN P-3 G8

NOTE:

FOR NOTES AND BEAM REPAIR DETAILS SEE DWG. S-47.

LEGEND

- CRACK (HAIRLINE UNLESS DIMENSIONED OTHERWISE) (H.L.C.)
- SPALL AREA WITH EXPOSED REINFORCING (S.A. W/E.R.)
- SPALL AREA (S.A.)
- HOLLOW AREA (H.A.)
- SHALLOW REBAR (SH. A.)
- HONEY COMB AREA (H.C.A.)
- SCALE AREA (SC. A.)
- MAP CRACKS (MPCR)
- E EFFLORESCENCE (E)

KEY

F.H. = FULL HEIGHT
F.W. = FULL WIDTH
F.L. = FULL LENGTH
D.P. = DEEP

T.F. = TOP FLANGE
B.F. = BOTTOM FLANGE
L.R. = LAMINAR RUST
S.L. = SECTION LOSS
NEG. = NEGLIGIBLE
VT. = VERTICAL
C.P. = CONCRETE PATCH

REV.	DATE	REVISION DESCRIPTION	SHEET NO.

THE INFORMATION, INCLUDING ESTIMATED QUANTITIES OF WORK, SHOWN ON THESE SHEETS IS BASED ON LIMITED INVESTIGATIONS BY THE STATE AND IS IN NO WAY WARRANTED TO INDICATE THE CONDITIONS OF ACTUAL QUANTITIES OF WORK WHICH WILL BE REQUIRED.

Plotted Date: 9/25/2018

DESIGNER/DRAFTER: B.A./S.C.
CHECKED BY: J.H.M. II
SCALE: 3/4" = 1'-0"

STATE OF CONNECTICUT
DEPARTMENT OF TRANSPORTATION

Filename: ...\SB_MSH_173_462_BR02295_S-43_BEAM_DETER-P3-G8.dgn

SIGNATURE/BLOCK:
Close, Jensen and Miller, P.C.
1137 Silas Deane Highway
Wethersfield, CT 06109

PROJECT TITLE:
REHABILITATION OF BRIDGE NO. 02295, ROUTE 136 OVER NORWALK RIVER

TOWN: **NORWALK**

DRAWING TITLE: **SPAN P-3 G8 DETERIORATION**

PROJECT NO. 173-462
DRAWING NO. S-43
SHEET NO. 03.43

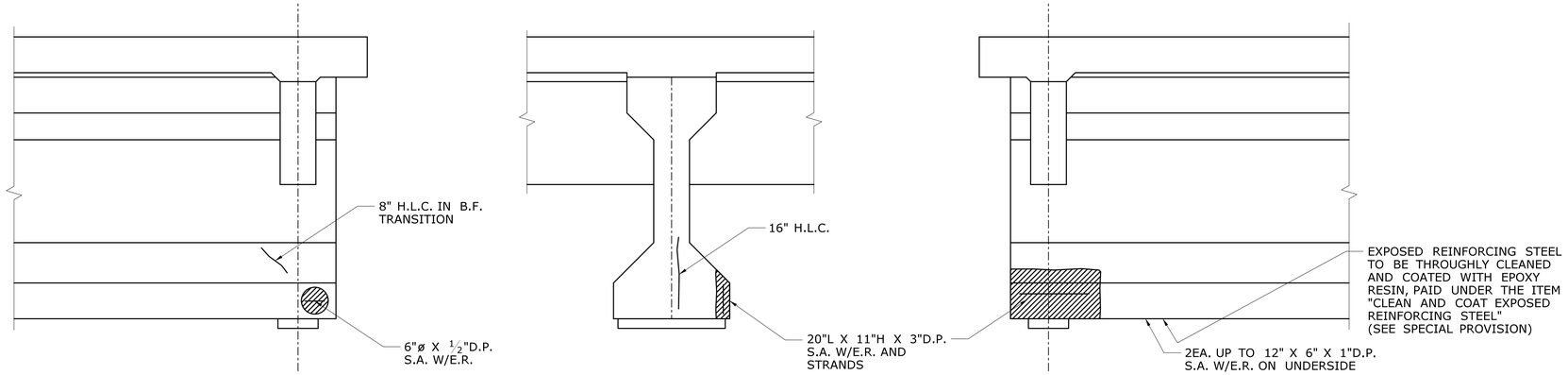

NORTH ELEVATION **BEAM END** **SOUTH ELEVATION**

EXISTING CONDITION PIER NO. 3 SPAN P-3 G9

NOTE:

FOR NOTES AND BEAM REPAIR DETAILS SEE DWG. S-47.

LEGEND

- CRACK (HAIRLINE UNLESS DIMENSIONED OTHERWISE) (H.L.C.)
- SPALL AREA WITH EXPOSED REINFORCING (S.A. W/E.R.)
- SPALL AREA (S.A.)
- HOLLOW AREA (H.A.)
- SHALLOW REBAR (SH. A.)
- HONEY COMB AREA (H.C.A.)
- SCALE AREA (SC. A.)
- MAP CRACKS (MPCR)
- E EFFLORESCENCE (E)

KEY

F.H. = FULL HEIGHT
F.W. = FULL WIDTH
F.L. = FULL LENGTH
D.P. = DEEP

T.F. = TOP FLANGE
B.F. = BOTTOM FLANGE
L.R. = LAMINAR RUST
S.L. = SECTION LOSS
NEG. = NEGLIGIBLE
VT. = VERTICAL
C.P. = CONCRETE PATCH

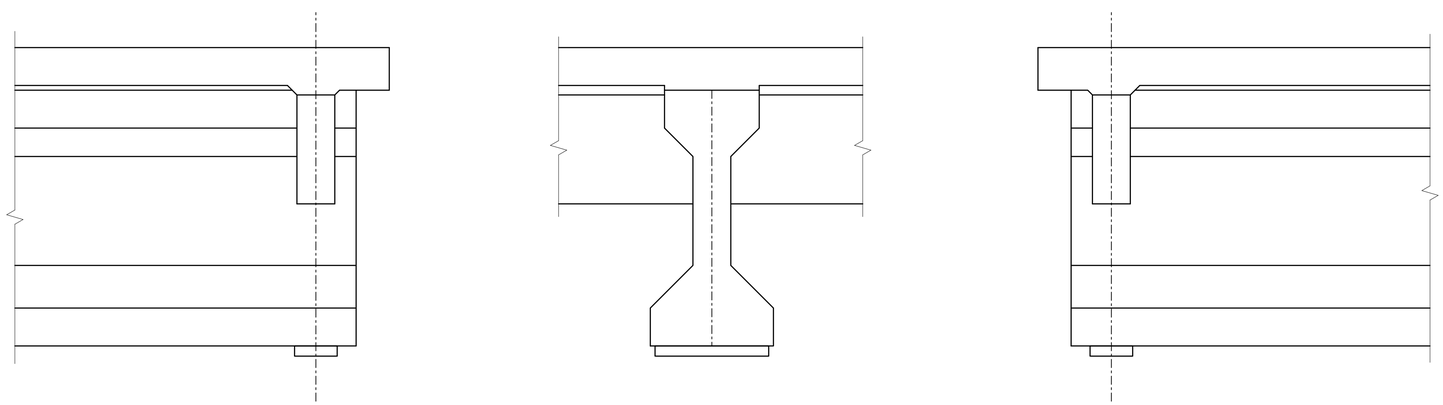

SOUTH ELEVATION **BEAM END** **NORTH ELEVATION**

EXISTING CONDITION ABUTMENT NO. 2 SPAN P-3 G9

REV.	DATE	REVISION DESCRIPTION	SHEET NO.

THE INFORMATION, INCLUDING ESTIMATED QUANTITIES OF WORK, SHOWN ON THESE SHEETS IS BASED ON LIMITED INVESTIGATIONS BY THE STATE AND IS IN NO WAY WARRANTED TO INDICATE THE CONDITIONS OF ACTUAL QUANTITIES OF WORK WHICH WILL BE REQUIRED.

Plotted Date: 9/25/2018

DESIGNER/DRAFTER: B.A./S.C.
CHECKED BY: J.H.M. II
SCALE: 3/4" = 1'-0"

STATE OF CONNECTICUT
DEPARTMENT OF TRANSPORTATION

Filename: ...\SB_MSH_173_462_BR02295_S-44_BEAM_DETER-P3-G9.dgn

SIGNATURE/ BLOCK:
Close, Jensen and Miller, P.C.
1137 Silas Deane Highway
Wethersfield, CT 06109

PROJECT TITLE:
REHABILITATION OF BRIDGE NO. 02295, ROUTE 136 OVER NORWALK RIVER

TOWN: **NORWALK**

DRAWING TITLE: **SPAN P-3 G9 DETERIORATION**

PROJECT NO. 173-462
DRAWING NO. S-44
SHEET NO. 03.44

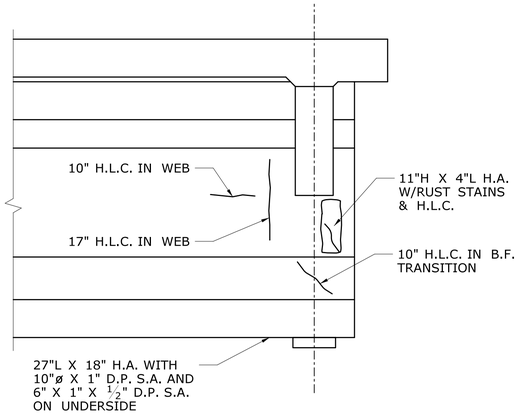

NORTH ELEVATION

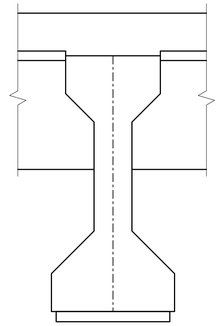

BEAM END

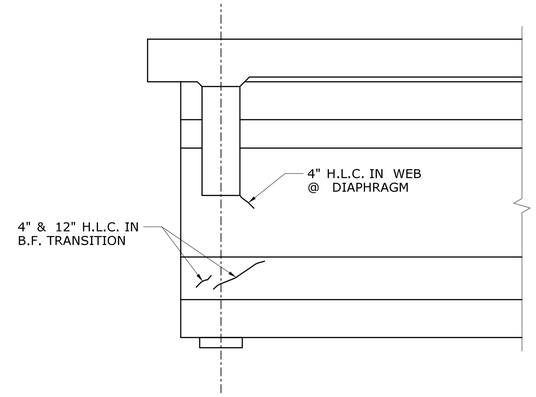

SOUTH ELEVATION

EXISTING CONDITION PIER NO. 3 SPAN P-3 G10

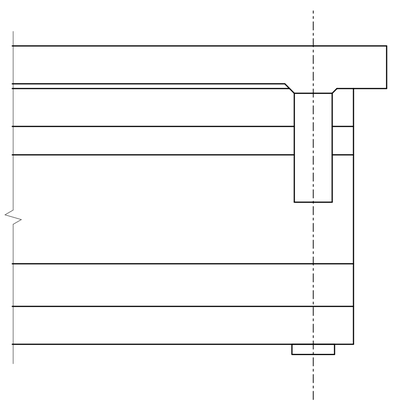

SOUTH ELEVATION

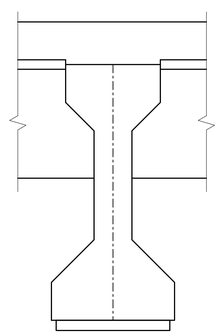

BEAM END

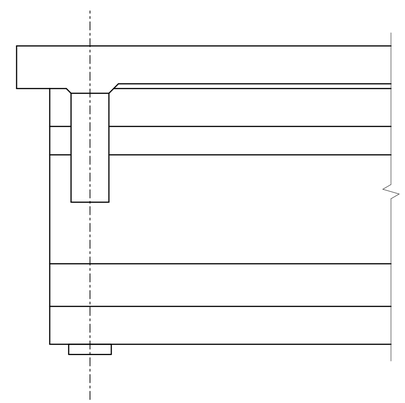

NORTH ELEVATION

EXISTING CONDITION ABUTMENT NO. 2 SPAN P-3 G10

NOTE:

FOR NOTES AND BEAM REPAIR DETAILS SEE DWG. S-47.

LEGEND

- CRACK (HAIRLINE UNLESS DIMENSIONED OTHERWISE) (H.L.C.)
- SPALL AREA WITH EXPOSED REINFORCING (S.A. W/E.R.)
- SPALL AREA (S.A.)
- HOLLOW AREA (H.A.)
- SHALLOW REBAR (SH. A.)
- HONEY COMB AREA (H.C.A.)
- SCALE AREA (SC. A.)
- MAP CRACKS (MPCR)
- E EFFLORESCENCE (E)

KEY

F.H. = FULL HEIGHT
F.W. = FULL WIDTH
F.L. = FULL LENGTH
D.P. = DEEP

T.F. = TOP FLANGE
B.F. = BOTTOM FLANGE
L.R. = LAMINAR RUST
S.L. = SECTION LOSS
NEG. = NEGLIGIBLE
VT. = VERTICAL
C.P. = CONCRETE PATCH

REV.	DATE	REVISION DESCRIPTION	SHEET NO.

THE INFORMATION, INCLUDING ESTIMATED QUANTITIES OF WORK, SHOWN ON THESE SHEETS IS BASED ON LIMITED INVESTIGATIONS BY THE STATE AND IS IN NO WAY WARRANTED TO INDICATE THE CONDITIONS OF ACTUAL QUANTITIES OF WORK WHICH WILL BE REQUIRED.

Plotted Date: 9/25/2018

DESIGNER/DRAFTER: B.A./S.C.
CHECKED BY: J.H.M. II
SCALE: 3/4" = 1'-0"

STATE OF CONNECTICUT
DEPARTMENT OF TRANSPORTATION

Filename: ...\SB_MSH_173_462_BR02295_S-45_BEAM_DETER-P3-G10.dgn

SIGNATURE/BLOCK:
Close, Jensen and Miller, P.C.
1137 Silas Deane Highway
Wethersfield, CT 06109

PROJECT TITLE:
REHABILITATION OF BRIDGE NO. 02295, ROUTE 136 OVER NORWALK RIVER

TOWN: **NORWALK**

DRAWING TITLE: **SPAN P-3 G10 DETERIORATION**

PROJECT NO. 173-462
DRAWING NO. S-45
SHEET NO. 03.45

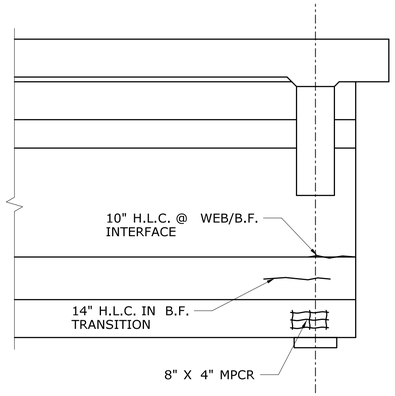

NORTH ELEVATION

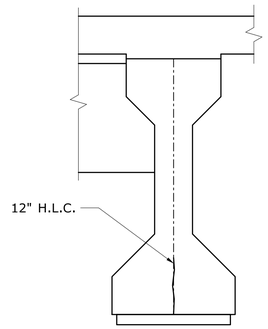

BEAM END

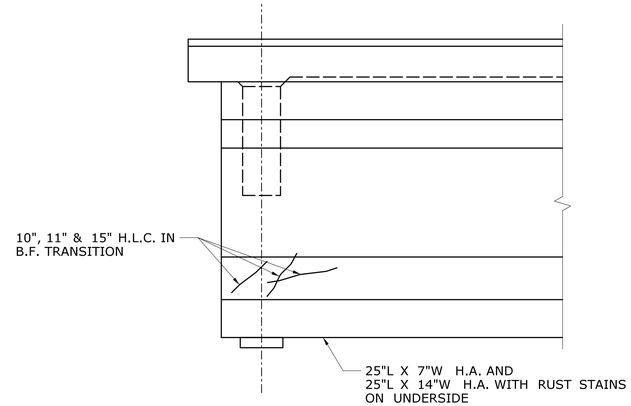

SOUTH ELEVATION

EXISTING CONDITION PIER NO. 3 SPAN P-3 G11

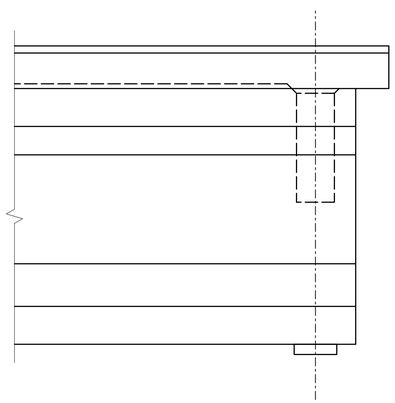

SOUTH ELEVATION

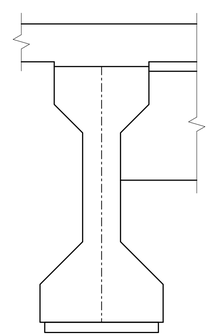

BEAM END

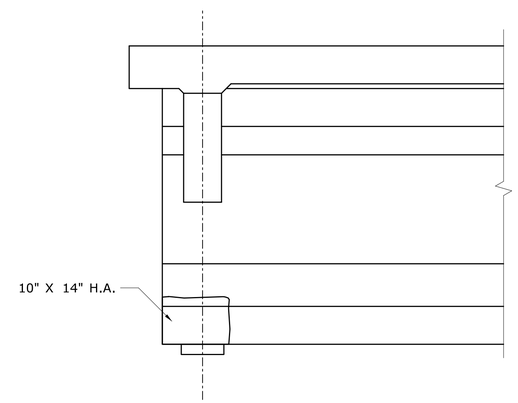

NORTH ELEVATION

EXISTING CONDITION ABUTMENT NO. 2 SPAN P-3 G11

NOTE:

FOR NOTES AND BEAM REPAIR DETAILS SEE DWG. S-47.

LEGEND

- CRACK (HAIRLINE UNLESS DIMENSIONED OTHERWISE) (H.L.C.)
- SPALL AREA WITH EXPOSED REINFORCING (S.A. W/E.R.)
- SPALL AREA (S.A.)
- HOLLOW AREA (H.A.)
- SHALLOW REBAR (SH. A.)
- HONEY COMB AREA (H.C.A.)
- SCALE AREA (SC. A.)
- MAP CRACKS (MPCR)
- E EFFLORESCENCE (E)

KEY

F.H. = FULL HEIGHT
F.W. = FULL WIDTH
F.L. = FULL LENGTH
D.P. = DEEP

T.F. = TOP FLANGE
B.F. = BOTTOM FLANGE
L.R. = LAMINAR RUST
S.L. = SECTION LOSS
NEG. = NEGLIGIBLE
VT. = VERTICAL
C.P. = CONCRETE PATCH

REV.	DATE	REVISION DESCRIPTION	SHEET NO.

THE INFORMATION, INCLUDING ESTIMATED QUANTITIES OF WORK, SHOWN ON THESE SHEETS IS BASED ON LIMITED INVESTIGATIONS BY THE STATE AND IS IN NO WAY WARRANTED TO INDICATE THE CONDITIONS OF ACTUAL QUANTITIES OF WORK WHICH WILL BE REQUIRED.

Plotted Date: 9/25/2018

DESIGNER/DRAFTER: B.A./S.C.
CHECKED BY: J.H.M. II
SCALE: 3/4" = 1'-0"

STATE OF CONNECTICUT
DEPARTMENT OF TRANSPORTATION

Filename: ...\SB_MSH_173_462_BR02295_S-46_BEAM_DETER-P3-G11.dgn

SIGNATURE/BLOCK:
Close, Jensen and Miller, P.C.
1137 Silas Deane Highway
Wethersfield, CT 06109

PROJECT TITLE:
REHABILITATION OF BRIDGE NO. 02295, ROUTE 136 OVER NORWALK RIVER

TOWN: **NORWALK**

DRAWING TITLE: **SPAN P-3 G11 DETERIORATION**

PROJECT NO. 173-462
DRAWING NO. S-46
SHEET NO. 03.46

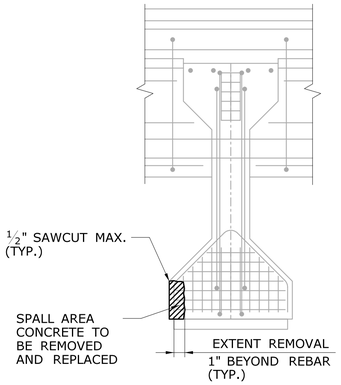

END VIEW

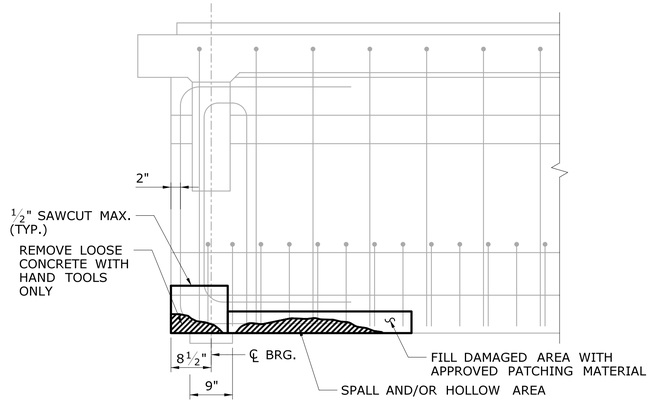

SIDE VIEW

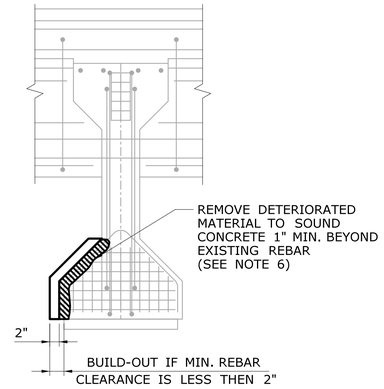

END VIEW

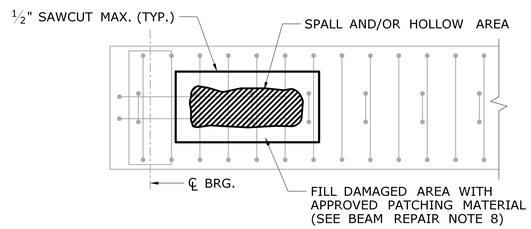

BOTTOM VIEW

CONCRETE BEAM END

BEAM REPAIR NOTES:

1. DEFINE LIMITS OF AREA TO BE REPAIRD PLUS 1" ON ALL SIDES.
2. DO NOT DAMAGE EXISTING REBAR AND STRANDS TO REMAIN DURING THE REMOVAL OPERATION.
3. REMOVE ALL DETERIORATED CONCRETE TO SOUND CONCRETE.
4. CLEAN ANY CORRODED REINFORCING BY SAND BLASTING.
5. USE COMPRESSED AIR TO REMOVE LOOSE CONCRETE DEBRIS.
6. CONCRETE REMOVAL IS TO BE PERFORMED WITH HAND TOOLS. NO POWER ACTUATED TOOL REMOVAL IS ALLOWED, FOR PRECAST CONCRETE BEAMS. USE CAUTION NEAR PRESTRESS TENDONS.
7. REMOVAL OF CAST IN PLACE CONCRETE DIAPHRAGMS MAY UTILIZE UP TO 15 LB. POWER ACTUATED CHIPPING HAMMER.
8. FILL DAMAGED AREA WITH APPROVED CEMENTITIOUS MORTAR (SEE "VARIABLE DEPTH PATCH" SPECIAL PROVISION)
9. FINISH FLUSH WITH THE EXISTING BEAM IF MIN. 2" CLEAR COVER IS ACHIEVED.
10. ALLOW TO FULLY CURE FOLLOWING MANUFACTURER'S RECOMMENDATIONS.

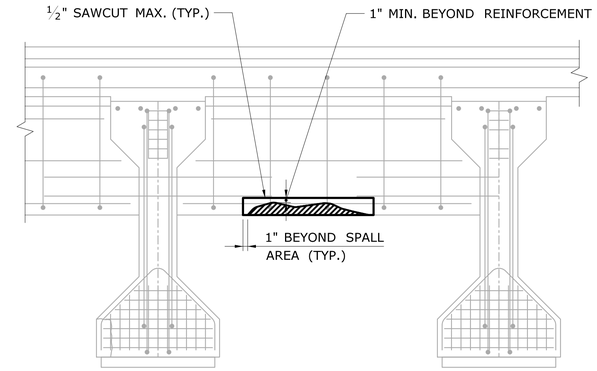

SECTION

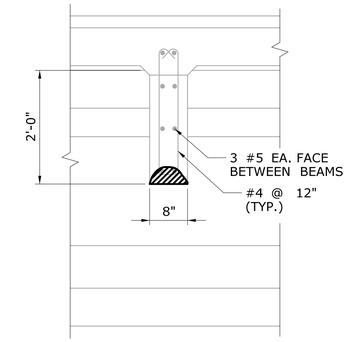

SECTION

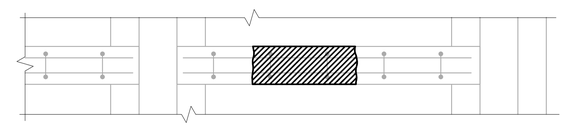

BOTTOM VIEW

CONCRETE DIAPHRAGM

LEGEND

DETERIORATED AREA FOR LOCATION AND DESCRIPTION, SEE DWG'S. S-14 - S-46.

NOTES:

1. ALL WORK SHOWN ON THIS DRAWING SHALL BE PERFORMED WHERE DIRECTED BY THE ENGINEER.
2. APPROVED PATCHING MATERIAL FOR CONCRETE REPAIRS SHALL BE PAID UNDER ITEM "VARIABLE DEPTH PATCH".
3. SURFACE PREPARATION, PROPORTIONING AND MIXING OF MATERIALS, APPLICATION OF MATERIALS AND REPAIR PROCEDURES SHALL BE IN ACCORDANCE WITH THE MANUFACTURER'S RECOMMENDATIONS.
4. NEW CONCRETE PATCHES SHALL MATCH SHAPE OF EXISTING CONCRETE SURFACES. COLOR OF NEW PATCH CONCRETE SHALL MATCH COLOR OF THE ADJACENT SURFACES AS CLOSELY AS POSSIBLE.
5. EXPOSED REINFORCING BARS SHALL BE CLEANED WITH HAND TOOLS AND COATED WITH AN APPROVED CEMENTITIOUS PRIMER, BEFORE APPLYING THE PATCHING MATERIAL. COST OF PRIMER SHALL BE INCLUDED IN THE COST OF THE PATCHING MATERIAL ITEM.
6. AREAS TO BE REPAIRED SHALL BE ROUGHLY OUTLINED AS SHOWN. RE-ENTRANT SHAPES AND SHAPES WITH INCLUDED ANGLES SHALL BE AVOIDED.
7. EXPOSED REINFORCING STEEL OR STRANDS, NOT BEING PATCHED, TO BE THROUGHLY CLEANED AND COATED WITH EPOXY RESIN ONLY, AT AREAS SHOWN ON PLANS, SHALL BE PAID UNDER THE ITEM "CLEAN AND COAT EXPOSED REINFORCING STEEL" (SEE SPECIAL PROVISION).
8. THE PERIPHERY OF THE AREAS TO BE REPAIRED SHALL BE SAWCUT TO THE DEPTH OF ½" MAX. FOR ALL TYPES OF REPAIR.
9. REPAIRS TO THE CONCRETE BEAMS SHALL BE PERFORMED FROM THE EXISTING SUBSTRUCTURE AS APPROVED BY THE ENGINEER WITH NO IMPACT TO THE WATER.

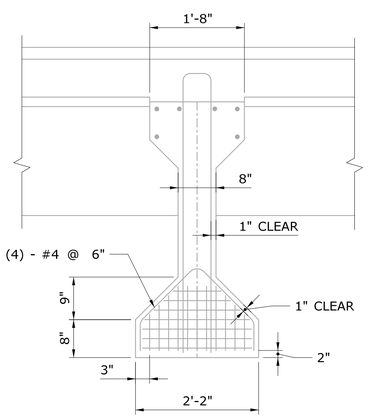

CROSS SECTION

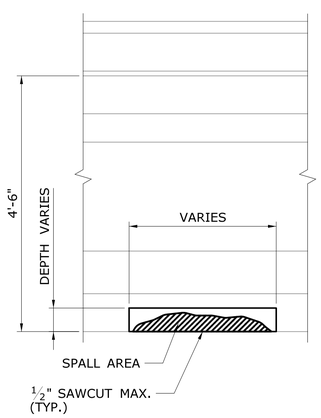

SIDE VIEW

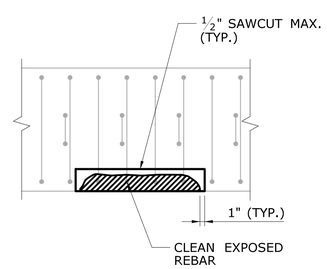

BOTTOM VIEW

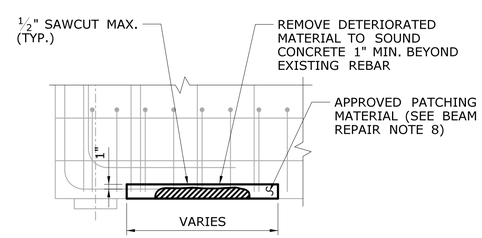

SIDE VIEW

TYPICAL CONCRETE BEAM

REV.	DATE	REVISION DESCRIPTION	SHEET NO.

THE INFORMATION, INCLUDING ESTIMATED QUANTITIES OF WORK, SHOWN ON THESE SHEETS IS BASED ON LIMITED INVESTIGATIONS BY THE STATE AND IS IN NO WAY WARRANTED TO INDICATE THE CONDITIONS OF ACTUAL QUANTITIES OF WORK WHICH WILL BE REQUIRED.

Plotted Date: 9/25/2018

DESIGNER/DRAFTER: B.A./S.C.
CHECKED BY: J.H.M. II
SCALE: ¾" = 1'-0"

STATE OF CONNECTICUT
DEPARTMENT OF TRANSPORTATION

Filename: ...\SB_MSH_173_462_BR02295_S-47_BEAM_DETER-det.dgn

SIGNATURE/BLOCK:
Close, Jensen and Miller, P.C.
1137 Silas Deane Highway
Wethersfield, CT 06109

PROJECT TITLE:
REHABILITATION OF BRIDGE NO. 02295, ROUTE 136 OVER NORWALK RIVER

TOWN: **NORWALK**

DRAWING TITLE: **TYPICAL CONCRETE BEAM REPAIR DETAILS**

PROJECT NO. 173-462
DRAWING NO. S-47
SHEET NO. 03.47

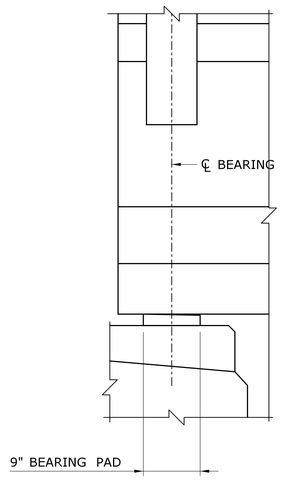

TYPICAL ELEVATION

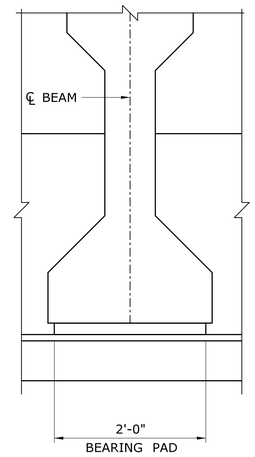

SECTION

EXISTING BEARINGS
ABUTMENT NO.1 AND 2, BASCULE PIER NO.1 AND 2, PIER NO. 3

SCALE: 1" = 1'-0"

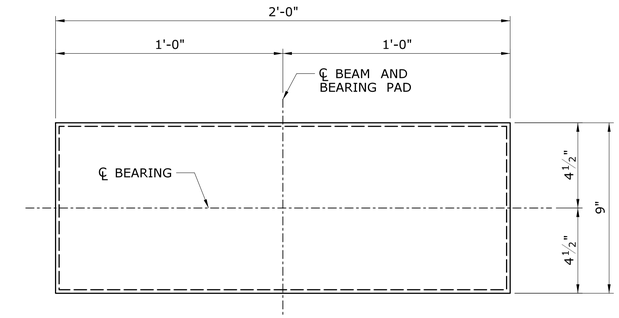

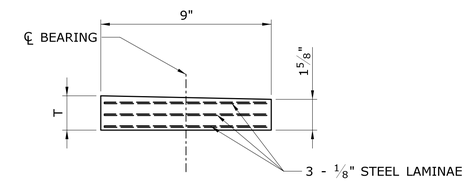

ELASTOMERIC PAD

SCALE: 3" = 1'-0"

BEAM GRADE (%)	T (IN)	SPAN	LOCATION
1.00 - 1.70	1 3/4	SPAN A-1 SPAN P-2	BASCULE PIER NO. 1 BASCULE PIER NO. 2
1.70 - 2.40	1 13/16	SPAN P-2 SPAN P-3	PIER NO. 3
2.40 - 3.10	1 7/8	SPAN A-1 SPAN P-3	ABUTMENT NO. 1 ABUTMENT NO. 2

ELASTOMERIC BEARINGS DEFICIENCIES

DETERIORATION TYPE	SPAN	GIRDER	LOCATION	DETERIORATION DIMENSIONS			NOTES
				L (IN)	W (IN)	D.P. (IN)	
EXPOSED TOP OF BRG. PAD	A-1	G1	ABUT. NO. 1	F.L.	3/8		5% SEC. LOSS OF BRG. PAD
GAP BETWEEN BRG. PAD & BEAM	A-1	G2	ABUT. NO. 1	6	2	1/8	N.W. CORNER
GAP BETWEEN BRG. PAD & BEAM	A-1	G4	ABUT. NO. 1	F.L.	6	3/16	BRG. PAD MISALIGNED 1/2" TO NORTH
	A-1	G5	PIER NO. 1				BRG. PAD MISALIGNED 1/2" TO NORTH
GAP BETWEEN BRG. PAD & BEAM	A-1	G7	PIER NO. 1	5	2	1/8	5% SEC. LOSS OF BRG. PAD @ N.W. CORNER
GAP BETWEEN BRG. PAD & PEDESTAL	A-1	G8	ABUT. NO. 1	3	3	1/16	N.W. CORNER
GAP BETWEEN BRG. PAD & BEAM	A-1	G8	ABUT. NO. 1	3	F.W.	3/16	
GAP BETWEEN BRG. PAD & BEAM	A-1	G9	ABUT. NO. 1	4	6	3/16	N.W. CORNER
GAP BETWEEN BRG. PAD & PEDESTAL	A-1	G9	ABUT. NO. 1	4	1	1/16	
	A-1	G9	PIER NO. 1				BRG. PAD MISALIGNED 1/4" TO NORTH
EXPOSED TOP OF BRG. PAD	A-1	G10	PIER NO. 1				BEAM CORNER SPALL @ S.E.
GAP BETWEEN BRG. PAD & BEAM	P-2	G2	PIER NO. 3	6	6	1/16	8.7% SEC. LOSS OF BRG. PAD @ S.W. CORNER
GAP BETWEEN BRG. PAD & BEAM	P-2	G5	PIER NO. 2	6	8	1/8	11.6% SEC. LOSS OF BRG. PAD @ S.W. CORNER
GAP BETWEEN BRG. PAD & BEAM	P-2	G6	PIER NO. 2	4	3	1/8	2.9% SEC. LOSS OF BRG. PAD @ N.E. CORNER
	P-2	G8	PIER NO. 2				BRG. PAD MISALIGNED 1/2" TO NORTH
	P-3	G4	PIER NO. 3				BRG. PAD MISALIGNED 1/4" TO NORTH
	P-3	G6	ABUT. NO. 2				BRG. PAD MISALIGNED 1" TO SOUTH
EXPOSED TOP OF BRG. PAD	P-3	G9	PIER NO. 3	4 1/2	1 1/4		BEAM CORNER SPALL @ S.W.

FOR INFORMATION ONLY

REV.	DATE	REVISION DESCRIPTION	SHEET NO.

THE INFORMATION, INCLUDING ESTIMATED QUANTITIES OF WORK, SHOWN ON THESE SHEETS IS BASED ON LIMITED INVESTIGATIONS BY THE STATE AND IS IN NO WAY WARRANTED TO INDICATE THE CONDITIONS OF ACTUAL QUANTITIES OF WORK WHICH WILL BE REQUIRED.

Plotted Date: 9/25/2018

DESIGNER/DRAFTER: B.A./S.C.
CHECKED BY: J.H.M. II
SCALE AS NOTED

STATE OF CONNECTICUT
DEPARTMENT OF TRANSPORTATION

Filename: ...\SB_MSH_173_462_BR02295_S-48_BEARING_REPAIR.dgn

SIGNATURE/ BLOCK:
Close, Jensen and Miller, P.C.
1137 Silas Deane Highway
Wethersfield, CT 06109

PROJECT TITLE:
REHABILITATION OF BRIDGE NO. 02295, ROUTE 136 OVER NORWALK RIVER

TOWN: NORWALK

DRAWING TITLE: EXISTING BEARINGS

PROJECT NO. 173-462
DRAWING NO. S-48
SHEET NO. 03.48

P-1 (EAST COUNTERWEIGHT)

DETERIORATION LOCATION	SPAN	STRINGER	DETERIORATION DIMENSIONS			ORIGINAL PLATE DIMENSIONS		% S.L. (THICK.)	SECTION LOSS NOTES	REPAIR REQUIRED	RECOMMENDED REPAIR DETAIL IF FIELD CONDITION WARRANTS REPAIR
			L (IN)	H/W (IN)	D.P. (IN)	W (IN)	THK (IN)				DRAWING NO.
TOP FLANGE	P-1	WF24X76	F.L.	4	1/8	9	11/16		FASCIA, S. EL.		
WEB	P-1	WF24X76	15	3	1/8	22.525	7/16	3.8%	FASCIA NEAR BEARING AREA	ST	S-57
BOTTOM FLANGE	P-1	WF24X76	15	4	1/8	9	11/16	8.2%	FASCIA MID SPAN, S.EL.	ST	S-57

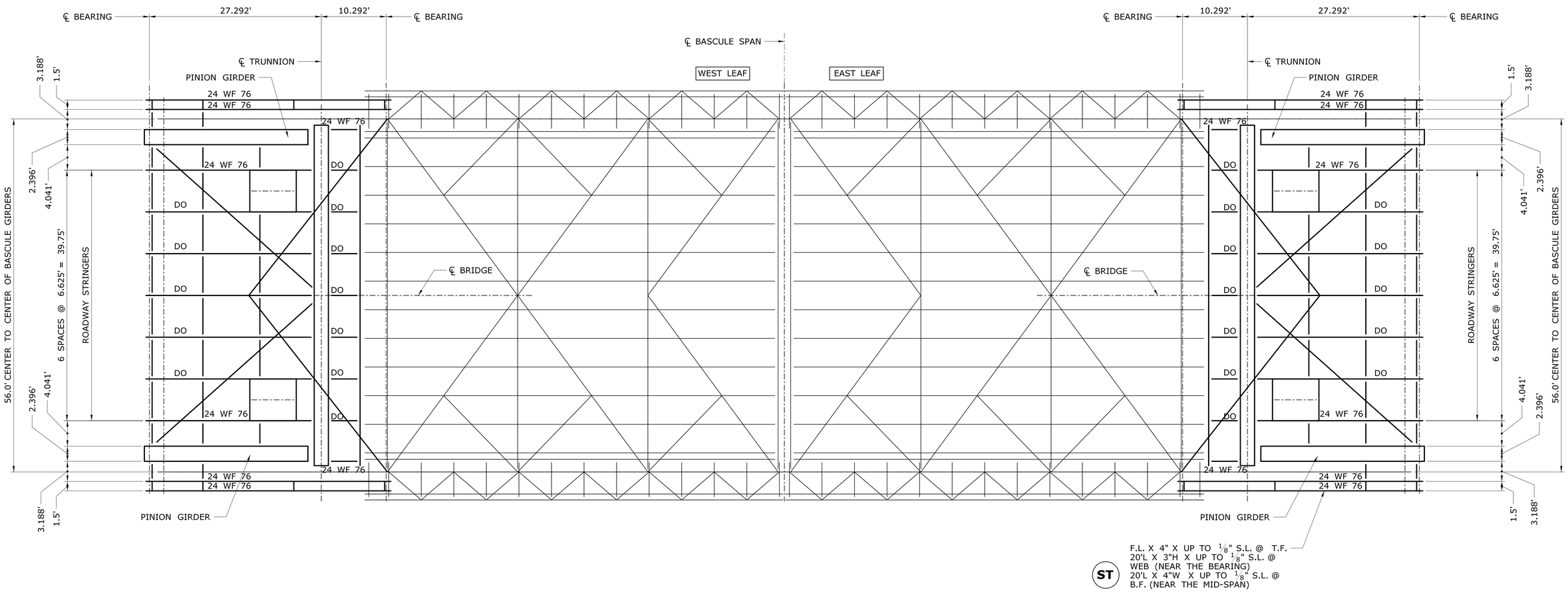

SPAN P-1 WEST FRAMING PLAN OVER COUNTERWEIGHT

SPAN P-1 EAST FRAMING PLAN OVER COUNTERWEIGHT

KEY

F.H. = FULL HEIGHT
F.W. = FULL WIDTH
F.L. = FULL LENGTH
D.P. = DEEP

T.F. = TOP FLANGE
B.F. = BOTTOM FLANGE
L.R. = LAMINAR RUST
S.L. = SECTION LOSS
NEG. = NEGLIGIBLE
V.T. = VERTICAL
STR. = STRINGER

NOTE:

SEE DWG. NO. S-57 FOR STEEL REPAIR NOTES AND DETAILS.

REV.	DATE	REVISION DESCRIPTION	SHEET NO.

THE INFORMATION, INCLUDING ESTIMATED QUANTITIES OF WORK, SHOWN ON THESE SHEETS IS BASED ON LIMITED INVESTIGATIONS BY THE STATE AND IS IN NO WAY WARRANTED TO INDICATE THE CONDITIONS OF ACTUAL QUANTITIES OF WORK WHICH WILL BE REQUIRED.

Plotted Date: 9/25/2018

DESIGNER/DRAFTER: B.A./S.C.
CHECKED BY: J.H.M. II
SCALE: 1/8" = 1'-0"

STATE OF CONNECTICUT
DEPARTMENT OF TRANSPORTATION

Filename: ...\SB_MSH_173_462_BR02295_S-49_FRAM_SPAN-P1-1.dgn

SIGNATURE/BLOCK:
Close, Jensen and Miller, P.C.
1137 Silas Deane Highway
Wethersfield, CT 06109

PROJECT TITLE:
REHABILITATION OF BRIDGE NO. 02295, ROUTE 136 OVER NORWALK RIVER

TOWN: **NORWALK**

DRAWING TITLE: **FRAMING PLAN SPANS P-1, E AND W**

PROJECT NO. 173-462
DRAWING NO. S-49
SHEET NO. 03.49

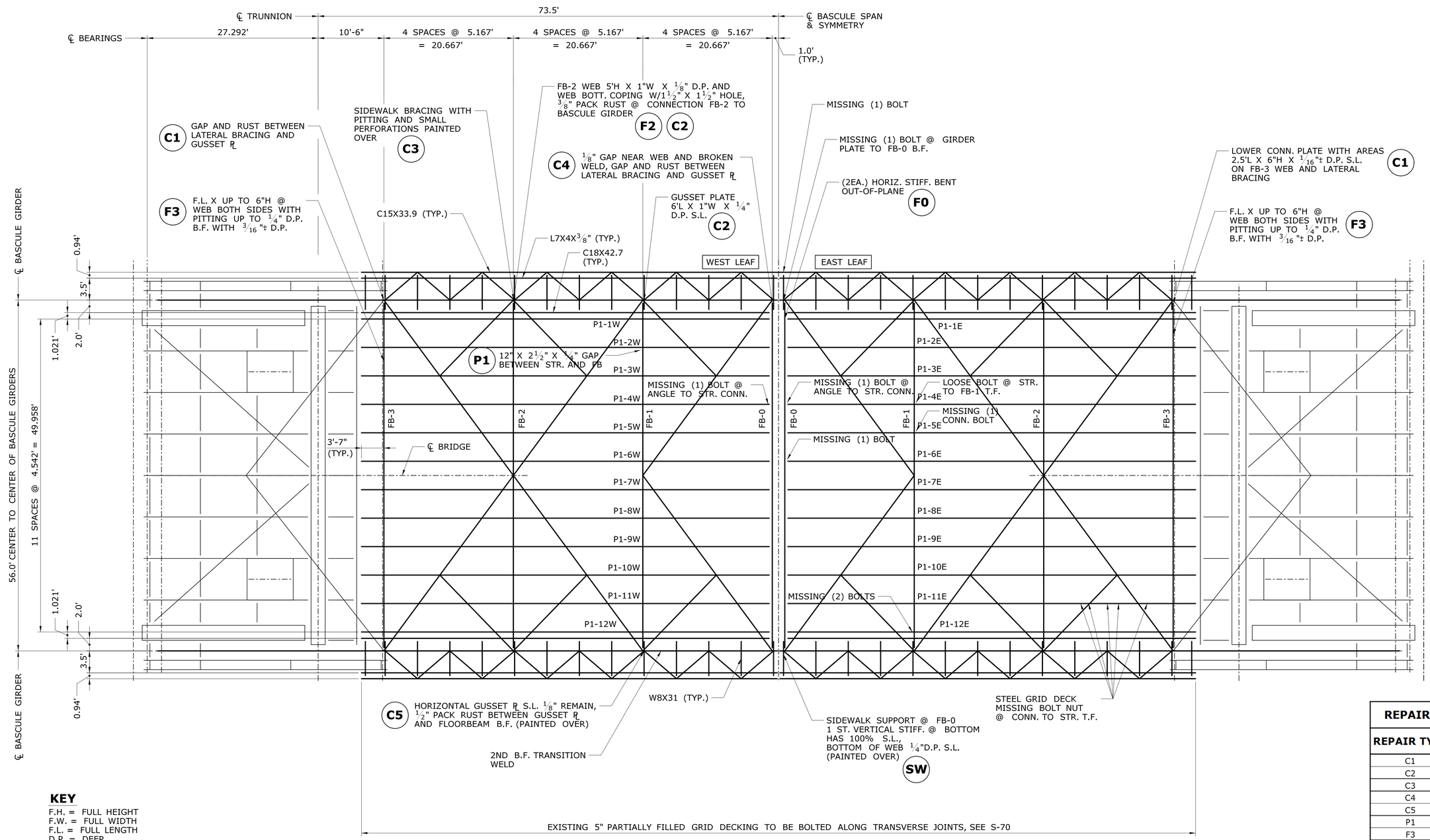

SPAN P-1 (BASCULE) FRAMING PLAN

REPAIR LOCATIONS

REPAIR TYPE	DWG. NO.
C1	S-52
C2	S-52
C3	S-52
C4	S-52
C5	S-53
P1	S-53
F3	S-54
SW	S-55
F0	S-56
F2	S-56
ST	S-57

KEY

F.H. = FULL HEIGHT
F.W. = FULL WIDTH
F.L. = FULL LENGTH
D.P. = DEEP

T.F. = TOP FLANGE
B.F. = BOTTOM FLANGE
L.R. = LAMINAR RUST
S.L. = SECTION LOSS
NEG. = NEGLIGIBLE
V.T. = VERTICAL
STR. = STRINGER

NOTE:

SEE DWG. NOS. S-52 TO S-56 AND S-58 FOR STEEL REPAIR NOTES AND DETAILS.

REV.	DATE	REVISION DESCRIPTION	SHEET NO.

THE INFORMATION, INCLUDING ESTIMATED QUANTITIES OF WORK, SHOWN ON THESE SHEETS IS BASED ON LIMITED INVESTIGATIONS BY THE STATE AND IS IN NO WAY WARRANTED TO INDICATE THE CONDITIONS OF ACTUAL QUANTITIES OF WORK WHICH WILL BE REQUIRED.

Plotted Date: 9/25/2018

DESIGNER/DRAFTER: B.A./S.C.
CHECKED BY: J.H.M. II
SCALE: 1/8" = 1'-0"

STATE OF CONNECTICUT
DEPARTMENT OF TRANSPORTATION

Filename: ..\SB_MSH_173_462_BR02295_S-50_FRAM_SPAN-P1-2.dgn

SIGNATURE/BLOCK:
Close, Jensen and Miller, P.C.
1137 Silas Deane Highway
Wethersfield, CT 06109

PROJECT TITLE:
REHABILITATION OF BRIDGE NO. 02295, ROUTE 136 OVER NORWALK RIVER

TOWN: **NORWALK**

DRAWING TITLE: **FRAMING PLAN SPAN P-1 (BASCULE)**

PROJECT NO. 173-462
DRAWING NO. S-50
SHEET NO. 03.50

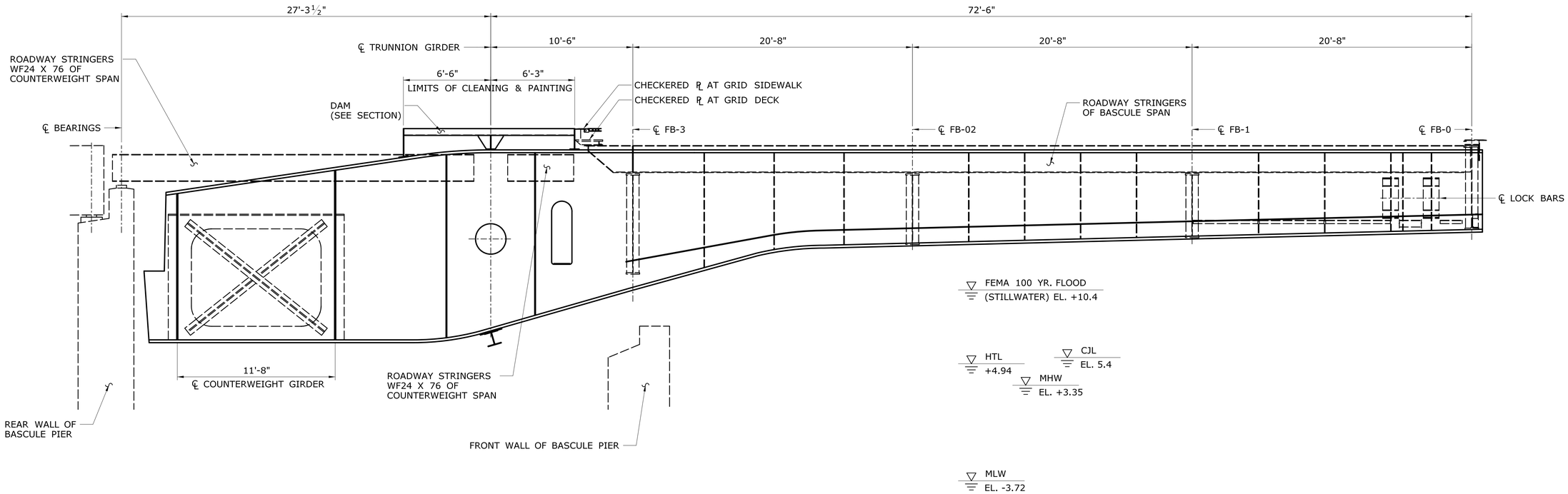

BASCULE GIRDER ELEVATION

SCALE: ¼" = 1'-0"

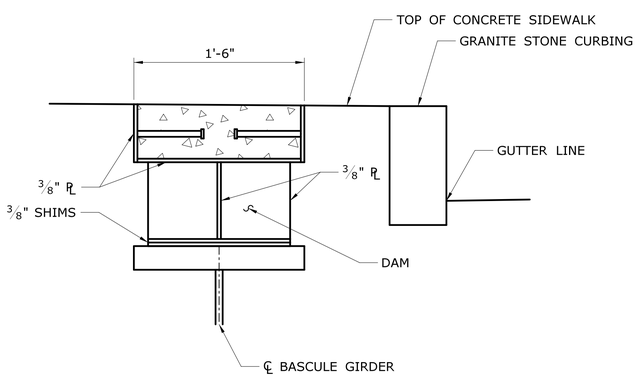

SECTION G / S-71

SCALE: 1½" = 1'-0"

NOTE:

CLEANING AND PAINTING OF DAM AREAS AS DIRECTED BY THE ENGINEER SHALL BE PAID FOR UNDER THE ITEM "LOCALIZED PAINT REMOVAL AND FIELD PAINTING OF EXISTING STEEL", SEE SPECIAL PROVISIONS.

STRUCTURAL STEEL REPAIR NOTES:

1. THE DETERIORATION AND REPAIR DIMENSIONS AND LOCATIONS DEPICTED ON THE FRAMING PLAN ARE BASED ON LIMITED FIELD OBSERVATIONS AND BRIDGE SAFETY IN-DEPTH INSPECTION REPORT DATED 06/28/2016. THE INFORMATION IS INTENDED TO BE USED AS A GUIDE AND DOES NOT NECESSARILY REFLECT THE CURRENT CONDITION OF THE STRUCTURE. THE EXACT LOCATION AND LIMITS OF DETERIORATED STEEL TO BE REPAIRED AND THE PROPOSED REPAIR DETAIL SHALL BE DELINEATED AND DETERMINED BY THE CONTRACTOR AND ENGINEER DURING CONSTRUCTION. NO MATERIAL SHALL BE ORDERED OR FABRICATED UNTIL THE ENGINEER HAS APPROVED REPAIR LOCATIONS.
2. STRUCTURAL STEEL (LOW ALLOY) FOR ALL SUPERSTRUCTURE STEEL REPAIRS SHALL CONFORM TO ASTM A709, GRADE 50 M270, (GRADE 50 T2).
3. WELDING DETAILS, PROCEDURES AND TESTING METHODS SHALL CONFORM TO THE CURRENT ANSI/AASHTO/AWS D1.5 (2015) - BRIDGE WELDING CODE, UNLESS OTHERWISE NOTED ON THE PLANS.
4. ALL WELDING ELECTRODES SHALL BE OF E70XXM SERIES TO CONFORM TO AWS D1.5 LATEST STANDARDS.
5. ALL BOLTED CONNECTIONS OF STRUCTURAL STEEL MEMBERS SHALL BE HIGH STRENGTH BOLTS MEETING THE REQUIREMENTS OF ASTM F3125 GRADE A325, AND CONFORMING TO THE REQUIREMENTS OF SECTION M.06.02-3.
6. ALL REPAIR AND REPLACEMENT OF MISCELLANEOUS STRUCTURAL STEEL OF THE BRIDGE SUPERSTRUCTURE IS TO BE INCLUDED IN THE COST OF "REHABILITATION OF EXISTING STRUCTURAL STEEL".
7. ALL PAINT REMOVAL, COLLECTION OF PAINT AND ASSOCIATED DEBRIS, SURFACE PREPARATION AND FIELD PAINTING OF THE EXISTING STEEL ARE TO BE INCLUDED IN THE COST OF "LOCALIZED PAINT REMOVAL AND FIELD PAINTING OF EXISTING STEEL".

COORDINATION AND SEQUENCING:

1. AREAS TO BE REPAIRED ARE TO BE FIELD INSPECTED AND DELINEATED BY THE CONTRACTOR AND ENGINEER AS A COOPERATIVE EFFORT. ACCESS TO THE AREAS TO BE INSPECTED IS TO BE SUPPLIED BY THE CONTRACTOR. THE DETERIORATED AREAS MAY REQUIRE HAND TOOL CLEANING (CHIPPING HAMMERS, WIRE BRUSHES, SCRAPERS, ETC...) TO PROPERLY ASSESS AND DELINEATE THE EXTENT OF DETERIORATION. THE COST OF ACCESS AND PRELIMINARY CLEANING IS TO BE INCLUDED IN THE COST OF THE STEEL REPAIR ITEMS.
2. THE REPAIRS ARE TO BE DETAILED BY THE CONTRACTOR AND SUBMITTED AS SHOP DRAWINGS WITH THE INFORMATION SPECIFIED ABOVE. THE SHOP DRAWINGS ARE TO INCLUDE THE TYPE OF PRIMER TO BE SHOP APPLIED TO THE NEW STEEL SHAPES. THE PRIMER MUST BE ONE OF THE APPROVED SYSTEMS OF THE PAINTING SPECIFICATIONS. NEW REPAIR STEEL SHAPES ARE TO BE FABRICATED AND SHIPPED WITH THE PRIME COAT APPLIED. THE AREAS TO BE WELDED MAY BE MASKED AND UNPAINTED OR PAINTED WITH FIELD REMOVAL OF THE PRIME COAT OCCURRING PRIOR TO WELDING.
3. FOLLOWING COMPLETION OF ABRASIVE BLAST CLEANING OPERATIONS, THE CONTRACTOR SHALL PROCEED WITH INSTALLATION OF THE NEW STRUCTURAL STEEL SHAPES.
4. FOR BOLTED CONNECTIONS, THE SLIP-CRITICAL PRIME COAT MUST BE APPLIED TO THE BASE STEEL PRIOR TO INSTALLATION OF THE REPAIR STEEL SHAPES. ALL NEW STRUCTURAL REPAIR CONNECTION PLATES SHALL BE SHOP DRILLED AND USED AS TEMPLATES FOR DRILLING IN EXISTING BASE STEEL.
5. FOR WELDED CONNECTIONS, THE PRIME COAT MUST BE APPLIED TO THE BASE STEEL, EXCEPT THE WELDING AREA WHICH SHOULD BE MASKED OFF PRIOR TO WELDING OF THE REPAIR STEEL TO EXISTING STEEL.
6. PRIME COATING AREAS DAMAGED BY WELDING ARE TO BE CLEANED AND RECOATED WITH PRIMER. THE COST OF THE CLEANING AND RECOAT WORK IS TO BE INCLUDED IN THE COST OF THE APPLICABLE PAINTING ITEM.
7. CLEANED SURFACES SHALL BE ACCEPTED BY THE ENGINEER BEFORE ANY PAINTING. THE PRIME COAT SHALL BE APPLIED TO THE STEEL BEFORE THE END OF THE DAY THAT PREPARATION WAS PERFORMED AND BEFORE THE FORMATION OF ANY FLASH RUSTING OR RE-RUSTING OF THE STEEL. FLUSH RUSTING OR RE-RUSTING OF THE SURFACE IS UNACCEPTABLE AND REQUIRES ADDITIONAL BLAST CLEANING PRIOR TO PAINTING WHICH WILL NOT BE MEASURED FOR PAYMENT.
8. AFTER THE NEW SHAPES ARE IN PLACE, COMPLETELY PRIMER COATED AND ACCEPTED, THE NEW PLATES SHALL BE COATED WITH THE SAME PAINT SYSTEM USED FOR THE EXISTING STEEL. THE CONTRACTOR IS TO ADHERE TO ALL INTER-COAT TIMES PRESCRIBED BY THE PAINT MANUFACTURER AND SCHEDULE THE REPAIR TRADES AND PAINTING TRADES ACCORDINGLY.

REV.	DATE	REVISION DESCRIPTION	SHEET NO.

THE INFORMATION, INCLUDING ESTIMATED QUANTITIES OF WORK, SHOWN ON THESE SHEETS IS BASED ON LIMITED INVESTIGATIONS BY THE STATE AND IS IN NO WAY WARRANTED TO INDICATE THE CONDITIONS OF ACTUAL QUANTITIES OF WORK WHICH WILL BE REQUIRED.

Plotted Date: 9/25/2018

DESIGNER/DRAFTER: B.A./S.C.
CHECKED BY: J.H.M. II
SCALE AS NOTED

STATE OF CONNECTICUT
DEPARTMENT OF TRANSPORTATION

Filename: ...\SB_MSH_173_462_BR02295_S-51_GIRDER_BASC.dgn

SIGNATURE/BLOCK:
Close, Jensen and Miller, P.C.
1137 Silas Deane Highway
Wethersfield, CT 06109

PROJECT TITLE:
REHABILITATION OF BRIDGE NO. 02295, ROUTE 136 OVER NORWALK RIVER

TOWN: **NORWALK**

DRAWING TITLE: **TYPICAL BASCULE GIRDER**

PROJECT NO. 173-462
DRAWING NO. S-51
SHEET NO. 03.51

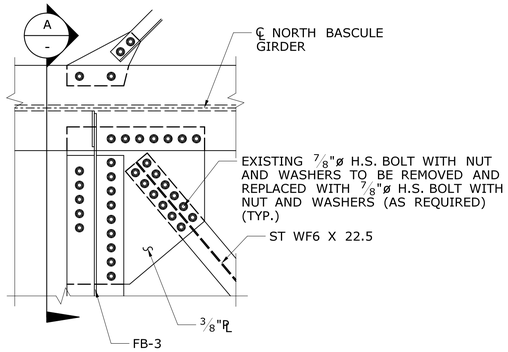

TOP VIEW

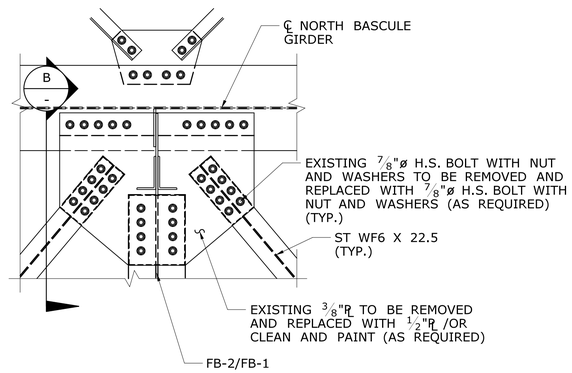

TOP VIEW

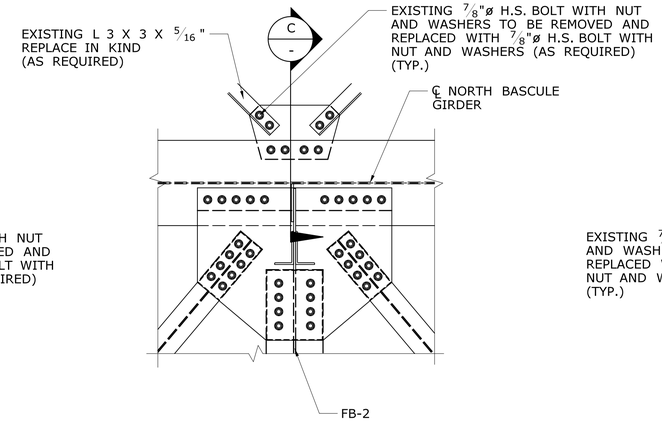

TOP VIEW

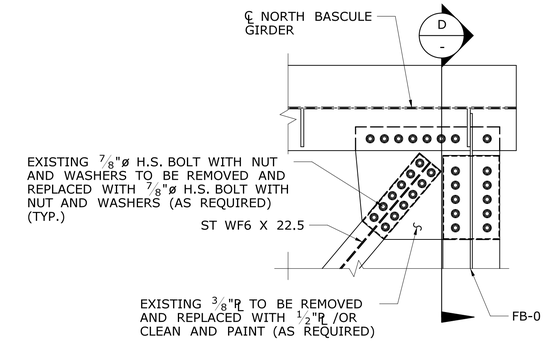

TOP VIEW

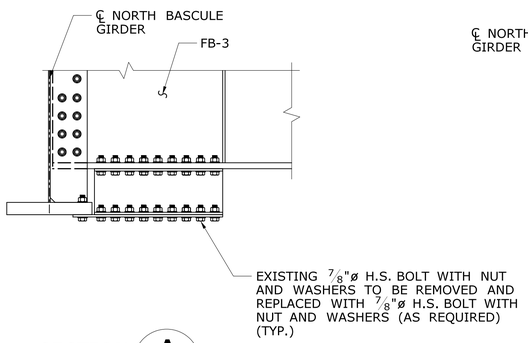

SECTION A -

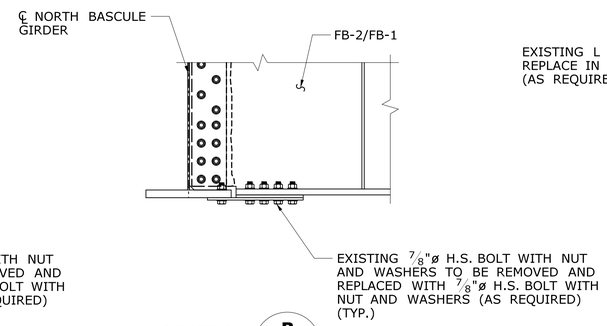

SECTION B -

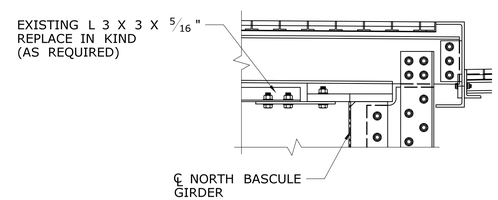

SECTION C -

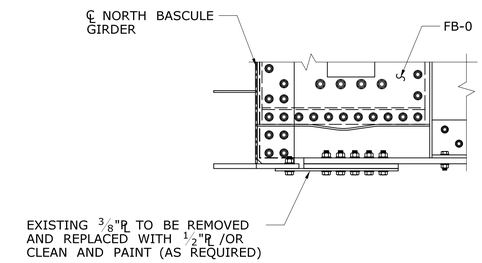

SECTION D -

C1 CONN. PLATE REPAIR DETAILS

C2 CONN. PLATE REPAIR DETAILS

C3 CONN. PLATE REPAIR DETAILS

C4 CONN. PLATE REPAIR DETAILS

NOTES:

SEE SPECIAL PROVISION "REHABILITATION OF EXISTING STRUCTURAL STEEL".

REV.	DATE	REVISION DESCRIPTION	SHEET NO.

THE INFORMATION, INCLUDING ESTIMATED QUANTITIES OF WORK, SHOWN ON THESE SHEETS IS BASED ON LIMITED INVESTIGATIONS BY THE STATE AND IS IN NO WAY WARRANTED TO INDICATE THE CONDITIONS OF ACTUAL QUANTITIES OF WORK WHICH WILL BE REQUIRED.

Plotted Date: 9/25/2018

DESIGNER/DRAFTER: B.A./S.C.
CHECKED BY: J.H.M. II
SCALE: 3/4" = 1'-0"

STATE OF CONNECTICUT
DEPARTMENT OF TRANSPORTATION

Filename: ..\SB_MSH_173_462_BR02295_S-52_BRACING_BASC_DET-1.dgn

SIGNATURE/BLOCK:
Close, Jensen and Miller, P.C.
1137 Silas Deane Highway
Wethersfield, CT 06109

PROJECT TITLE:
REHABILITATION OF BRIDGE NO. 02295, ROUTE 136 OVER NORWALK RIVER

TOWN: NORWALK

DRAWING TITLE: TYPICAL BASCULE CONNECTION DETAILS-1

PROJECT NO. 173-462
DRAWING NO. S-52
SHEET NO. 03.52

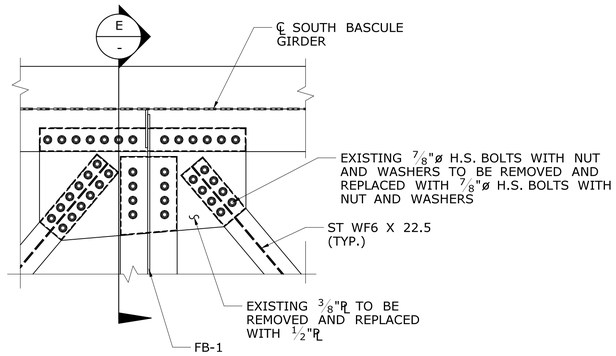

TOP VIEW

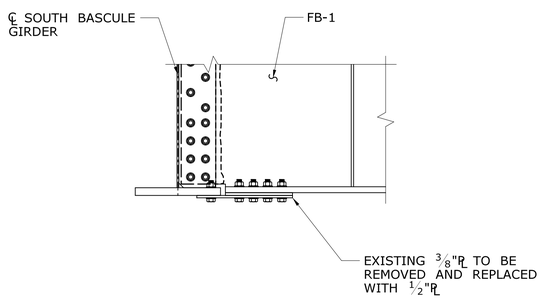

SECTION E / -

SCALE: 3/4" = 1'-0"

C5 CONN. PLATE REPAIR DETAILS

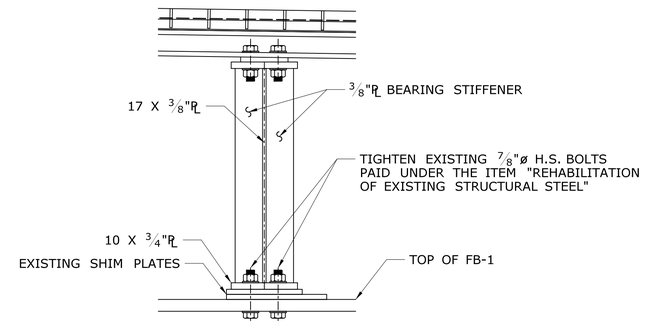

STRINGER P1-2W AT FB-1

SCALE: 1 1/2" = 1'-0"

P1 STRINGER CONNECTION REPAIR DETAIL

REV.	DATE	REVISION DESCRIPTION	SHEET NO.

THE INFORMATION, INCLUDING ESTIMATED QUANTITIES OF WORK, SHOWN ON THESE SHEETS IS BASED ON LIMITED INVESTIGATIONS BY THE STATE AND IS IN NO WAY WARRANTED TO INDICATE THE CONDITIONS OF ACTUAL QUANTITIES OF WORK WHICH WILL BE REQUIRED.

Plotted Date: 9/25/2018

DESIGNER/DRAFTER: B.A./S.C.
CHECKED BY: J.H.M. II

SCALE AS NOTED

STATE OF CONNECTICUT
DEPARTMENT OF TRANSPORTATION

Filename: ...\SB_MSH_173_462_BR02295_S-53_BRACING_BASC_DET-2.dgn

SIGNATURE/ BLOCK:

Close, Jensen and Miller, P.C.
1137 Silas Deane Highway
Wethersfield, CT 06109

PROJECT TITLE:
REHABILITATION OF BRIDGE NO. 02295, ROUTE 136 OVER NORWALK RIVER

TOWN: **NORWALK**

DRAWING TITLE: **TYPICAL BASCULE CONNECTION DETAILS-2**

PROJECT NO. 173-462
DRAWING NO. S-53
SHEET NO. 03.53

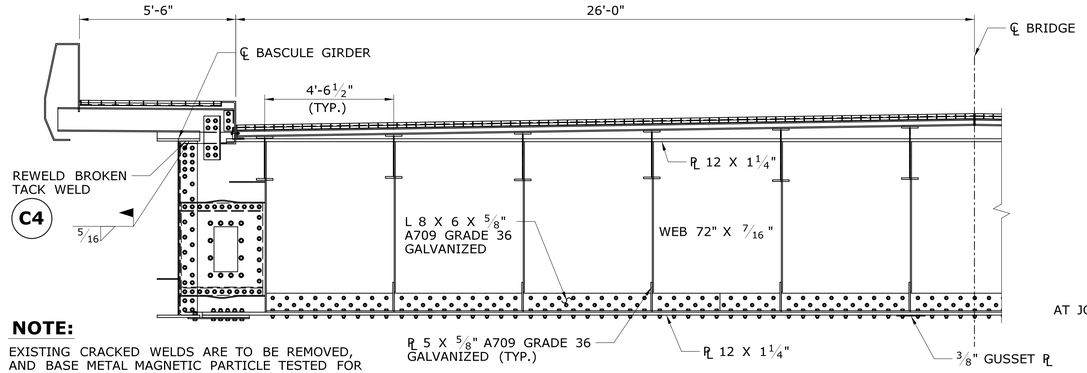

NOTE:

EXISTING CRACKED WELDS ARE TO BE REMOVED, AND BASE METAL MAGNETIC PARTICLE TESTED FOR CRACKS PRIOR TO REWELDING.
THE COST OF CLEANING, PAINT REMOVAL, REWELDING AND PAINTING AREAS SHOWN ON PLAN OR AS DIRECTED BY THE ENGINEER SHALL BE INCLUDED UNDER THE PAY ITEM "REPAIR DEFECTIVE WELDS".

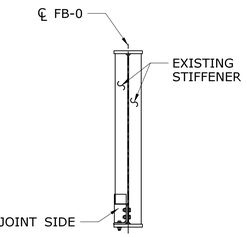

EXISTING FLOORBEAM FB-0

BASCULE SPAN, WEST LEAF (EAST ELEVATION) AND EAST LEAF (WEST ELEVATION)

SCALE: 3/8" = 1'-0"

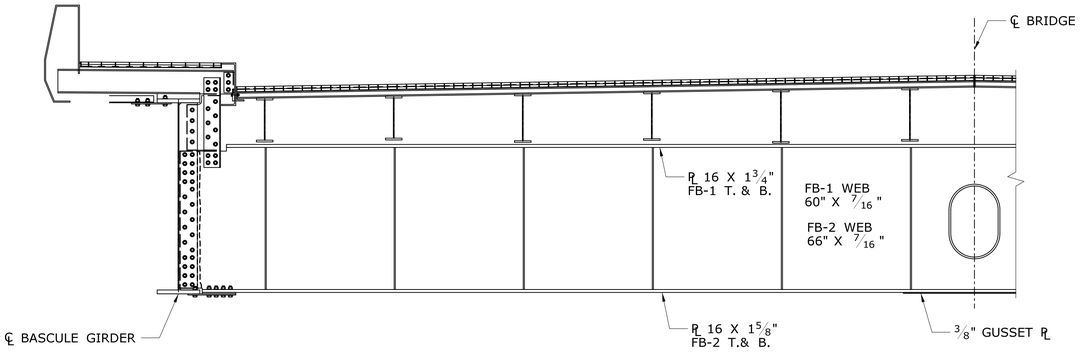

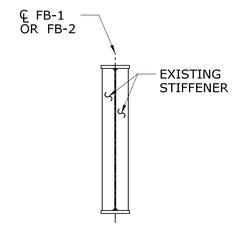

EXISTING FLOORBEAM FB-1, FB-2

SCALE: 3/8" = 1'-0"

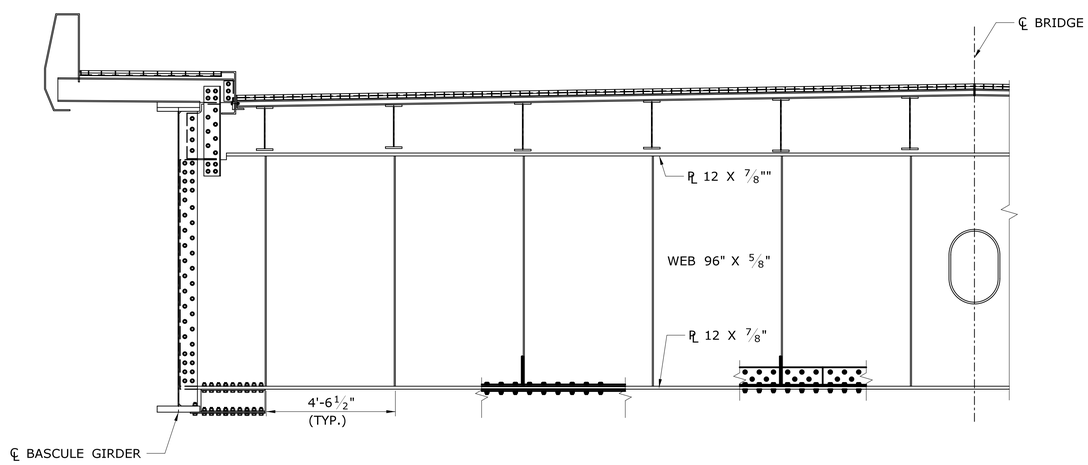

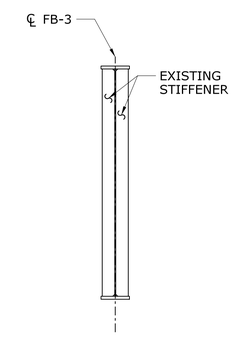

EXISTING FLOORBEAM FB-3

SCALE: 3/8" = 1'-0"

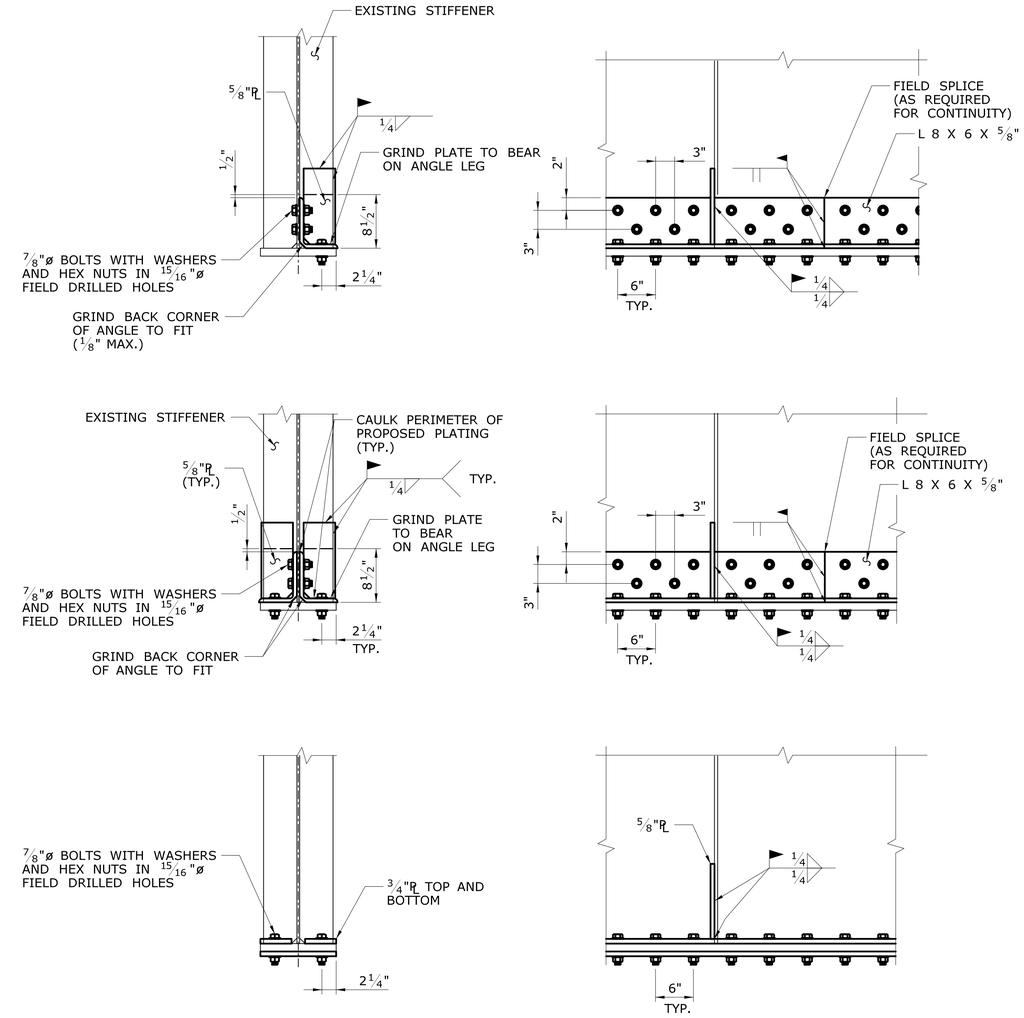

FB-3 REPAIR DETAILS

SCALE: 1" = 1'-0"

F3 FLOORBEAM FB-3 WEB AND BOTTOM FLANGE REPAIR DETAILS

(3 OPTIONS ABOVE, LOCATION SHALL BE DETERMINED BY THE ENGINEER)

NOTES:

1. APPLY EPOXY-BASED FILLER (PAID FOR UNDER "REHABILITATION OF EXISTING STRUCTURAL STEEL") TO ALL PITTED AND DETERIORATED SURFACES UNDER REPAIRING PLATES.
2. NUT IN EPOXY AREA SHALL NOT BE TORQUED UNTIL EPOXY IS SET.

REV.	DATE	REVISION DESCRIPTION	SHEET NO.

THE INFORMATION, INCLUDING ESTIMATED QUANTITIES OF WORK, SHOWN ON THESE SHEETS IS BASED ON LIMITED INVESTIGATIONS BY THE STATE AND IS IN NO WAY WARRANTED TO INDICATE THE CONDITIONS OF ACTUAL QUANTITIES OF WORK WHICH WILL BE REQUIRED.

Plotted Date: 9/25/2018

DESIGNER/DRAFTER: B.A./S.C.
CHECKED BY: J.H.M. II
SCALE AS NOTED

STATE OF CONNECTICUT
DEPARTMENT OF TRANSPORTATION

Filename: ...\SB_MSH_173_462_BR02295_S-54_FBM_details_repairs.dgn

SIGNATURE/BLOCK:
Close, Jensen and Miller, P.C.
1137 Silas Deane Highway
Wethersfield, CT 06109

PROJECT TITLE:
REHABILITATION OF BRIDGE NO. 02295, ROUTE 136 OVER NORWALK RIVER

TOWN: **NORWALK**

DRAWING TITLE: **SPAN P-1 (BASCULE) STEEL REPAIRS**

PROJECT NO. 173-462
DRAWING NO. S-54
SHEET NO. 03.54

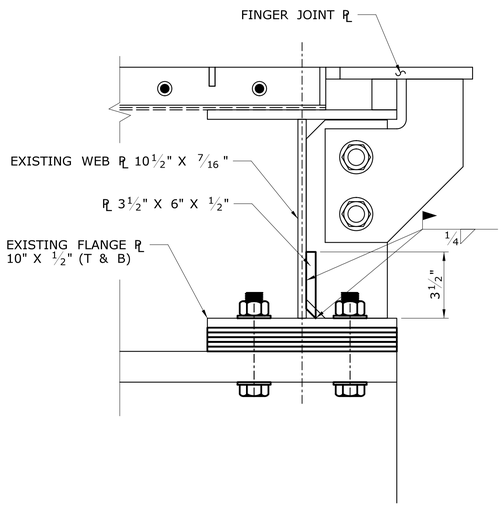

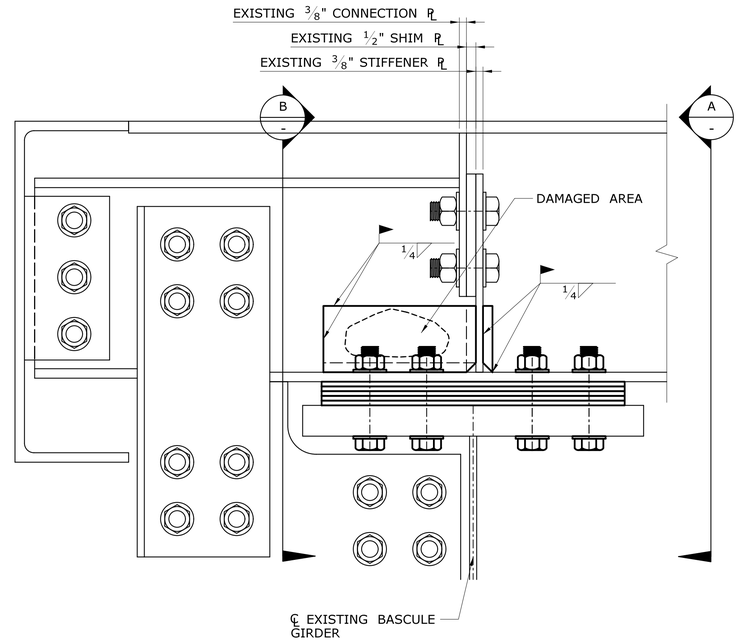

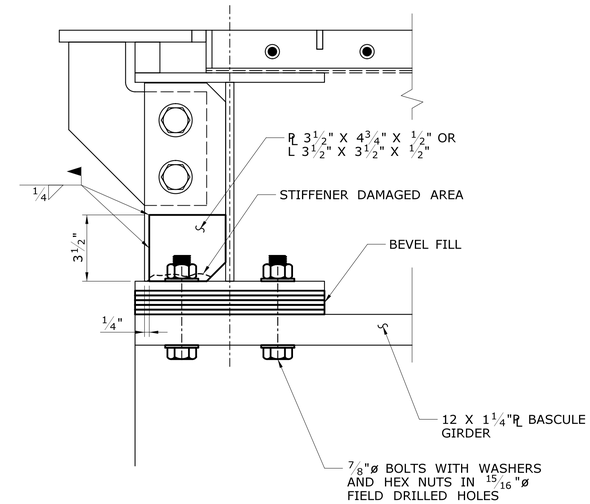

SECTION B
SCALE: 3" = 1'-0"

SIDEWALK SUPPORT
P-1 BASCULE SPAN (EAST LEAF)
FB-0 AND SOUTH BASCULE GIRDER
SCALE: 3" = 1'-0"

SECTION A
SCALE: 3" = 1'-0"

SW **SIDEWALK SUPPORT REPAIR DETAILS**

REV.	DATE	REVISION DESCRIPTION	SHEET NO.

THE INFORMATION, INCLUDING ESTIMATED QUANTITIES OF WORK, SHOWN ON THESE SHEETS IS BASED ON LIMITED INVESTIGATIONS BY THE STATE AND IS IN NO WAY WARRANTED TO INDICATE THE CONDITIONS OF ACTUAL QUANTITIES OF WORK WHICH WILL BE REQUIRED.

Plotted Date: 9/25/2018

DESIGNER/DRAFTER: B.A./S.C.
CHECKED BY: J.H.M. II
SCALE AS NOTED

STATE OF CONNECTICUT
DEPARTMENT OF TRANSPORTATION

Filename: ...\SB_MSH_173_462_BR02295_S-55_MISC_STEEL_repairs-1.dgn

SIGNATURE/ BLOCK:
Close, Jensen and Miller, P.C.
1137 Silas Deane Highway
Wethersfield, CT 06109

PROJECT TITLE:
REHABILITATION OF BRIDGE NO. 02295, ROUTE 136 OVER NORWALK RIVER

TOWN: **NORWALK**

DRAWING TITLE: **STEEL REPAIR DETAILS - 1**

PROJECT NO. **173-462**
DRAWING NO. **S-55**
SHEET NO. **03.55**

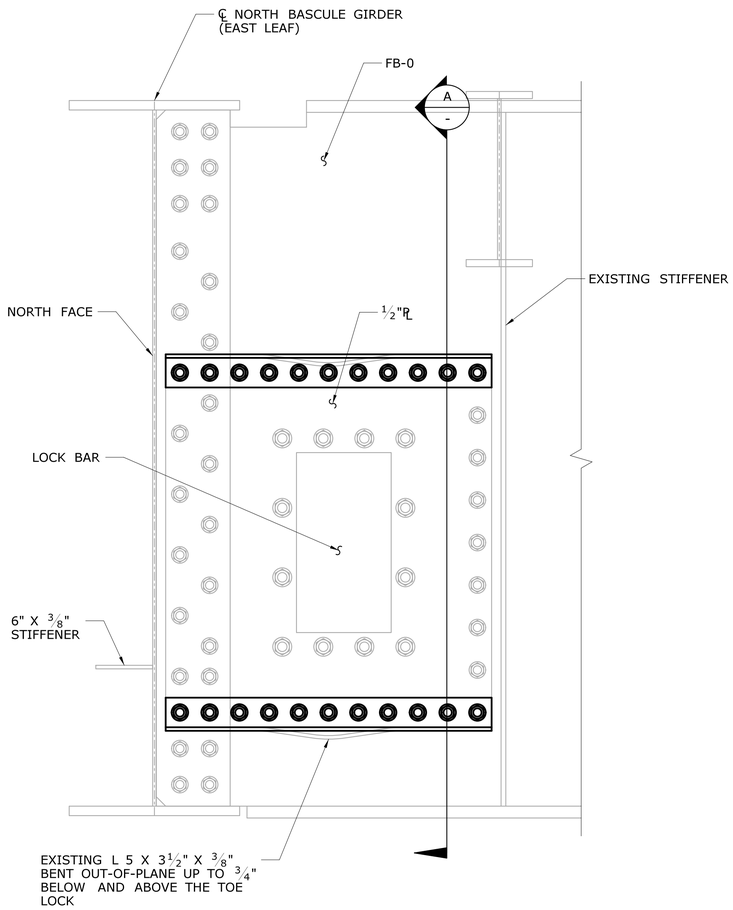

LOCK BAR DETAILS

BASCULE SPAN (EAST LEAF), FB-0 (LOOKING EAST)

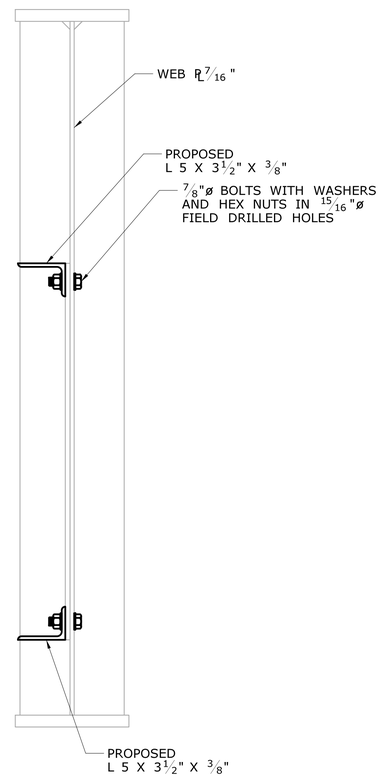

SECTION A / -

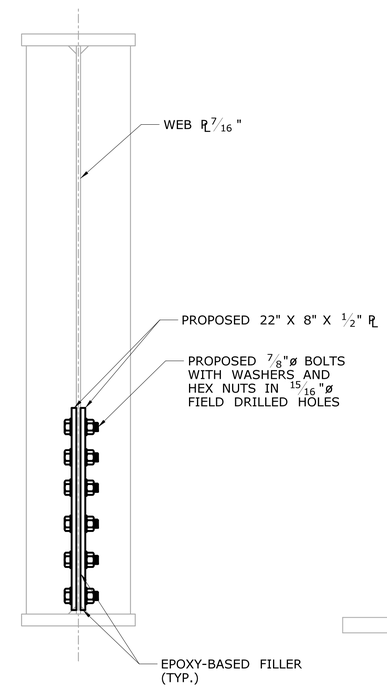

SECTION B / -

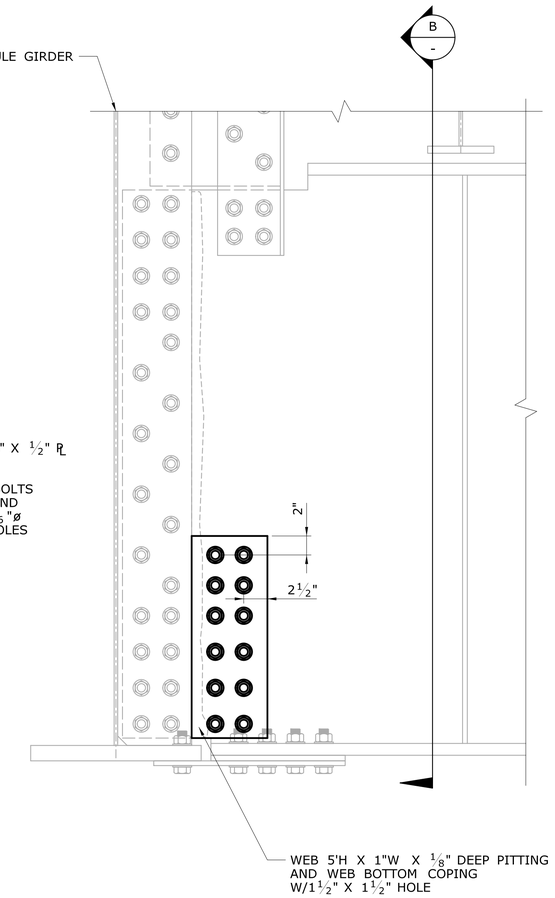

FB-2 BASCULE SPAN (WEST LEAF)

F0 FLOORBEAM STIFFENERS REPAIR DETAILS

F2 FLOORBEAM WEB REPAIR DETAILS

REV.	DATE	REVISION DESCRIPTION	SHEET NO.

THE INFORMATION, INCLUDING ESTIMATED QUANTITIES OF WORK, SHOWN ON THESE SHEETS IS BASED ON LIMITED INVESTIGATIONS BY THE STATE AND IS IN NO WAY WARRANTED TO INDICATE THE CONDITIONS OF ACTUAL QUANTITIES OF WORK WHICH WILL BE REQUIRED.

Plotted Date: 9/25/2018

DESIGNER/DRAFTER: **B.A./S.C.**

CHECKED BY: **J.H.M. II**

SCALE: 1 1/2" = 1'-0"

STATE OF CONNECTICUT
DEPARTMENT OF TRANSPORTATION

Filename: ...\SB_MSH_173_462_BR02295_S-56_MISC_STEEL_repairs-2.dgn

SIGNATURE/ BLOCK:

Close, Jensen and Miller, P.C.
1137 Silas Deane Highway
Wethersfield, CT 06109

PROJECT TITLE:

REHABILITATION OF BRIDGE NO. 02295, ROUTE 136 OVER NORWALK RIVER

TOWN: **NORWALK**

DRAWING TITLE: **STEEL REPAIR DETAILS - 2**

PROJECT NO. **173-462**

DRAWING NO. **S-56**

SHEET NO. **03.56**

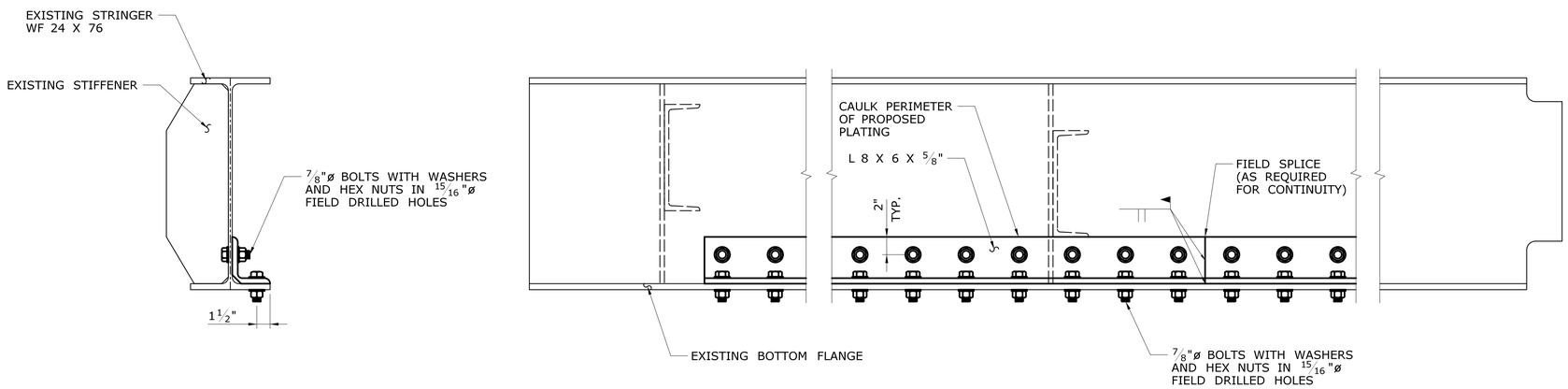

NOTE:

STEEL REHABILITATION REPAIR DETAIL SHOWN FOR DETERIORATION GREATER THAN 1/8".

EXISTING FASCIA STRINGER REPAIRS SPAN P-1 (COUNTERWEIGHT)

(ST) STRINGER WEB AND BOTTOM FLANGE REPAIR DETAILS

REV.	DATE	REVISION DESCRIPTION	SHEET NO.

THE INFORMATION, INCLUDING ESTIMATED QUANTITIES OF WORK, SHOWN ON THESE SHEETS IS BASED ON LIMITED INVESTIGATIONS BY THE STATE AND IS IN NO WAY WARRANTED TO INDICATE THE CONDITIONS OF ACTUAL QUANTITIES OF WORK WHICH WILL BE REQUIRED.

Plotted Date: 9/25/2018

DESIGNER/DRAFTER: **B.A./S.C.**

CHECKED BY: **J.H.M. II**

SCALE: 1 1/2" = 1'-0"

STATE OF CONNECTICUT
DEPARTMENT OF TRANSPORTATION

Filename: ...\SB_MSH_173_462_BR02295_S-57_STEEL_COUNTERWEIGHT_repairs-3.dgn

SIGNATURE/ BLOCK:

Close, Jensen and Miller, P.C.
1137 Silas Deane Highway
Wethersfield, CT 06109

PROJECT TITLE:

REHABILITATION OF BRIDGE NO. 02295, ROUTE 136 OVER NORWALK RIVER

TOWN: **NORWALK**

DRAWING TITLE: **STEEL REPAIRS DETAILS - 3**

PROJECT NO. **173-462**

DRAWING NO. **S-57**

SHEET NO. **03.57**

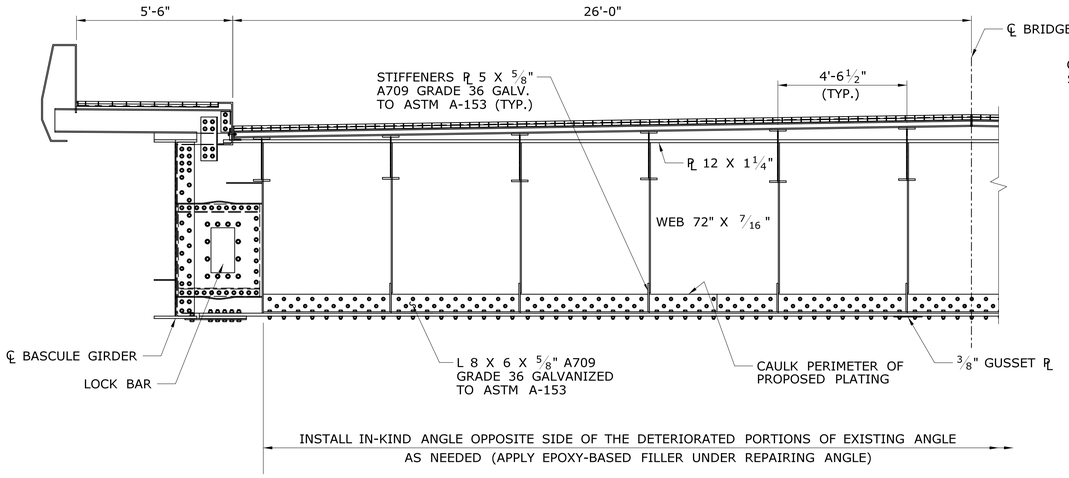

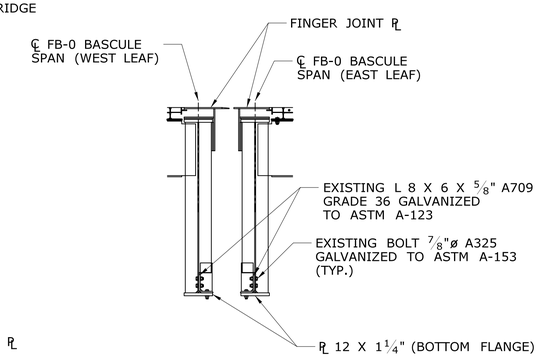

EXISTING CONDITION

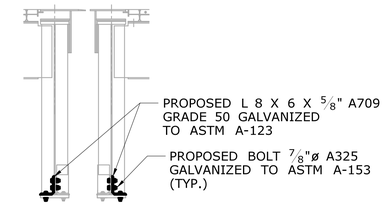

PROPOSED CONDITION

EXISTING FLOORBEAM FB-0

BASCULE SPAN, WEST LEAF (EAST ELEVATION) AND EAST LEAF (WEST ELEVATION)
SCALE: 3/8" = 1'-0"

NOTES:

1. STRUCTURAL STEEL SHALL CONFORM TO THE REQUIREMENTS OF AASHTO M270, GRADE 50 AND SHALL BE HOT DIP GALVANIZED IN ACCORDANCE WITH ASTM A123.
2. ALL HIGH-STRENGTH BOLTS SHALL CONFORM TO ASTM F3125 GRADE A325, TYPE 1. NUTS SHALL CONFORM TO ASTM A563, GRADE DH. WASHERS SHALL CONFORM TO ASTM F436. BOLTS, NUTS AND WASHERS SHALL BE GALVANIZED IN ACCORDANCE WITH ASTM A153, CLASS C.
3. THE PROPOSED GALVANIZED ANGLE REPAIR SHALL BE FIELD DRILLED TO MATCH THE EXISTING BOLT HOLE LOCATIONS. ALL WORK TO REMOVE AND REPLACE THE EXISTING FIELD BOLTS WITH NEW GALVANIZED A325 BOLTS IS INCLUDED IN THIS WORK.

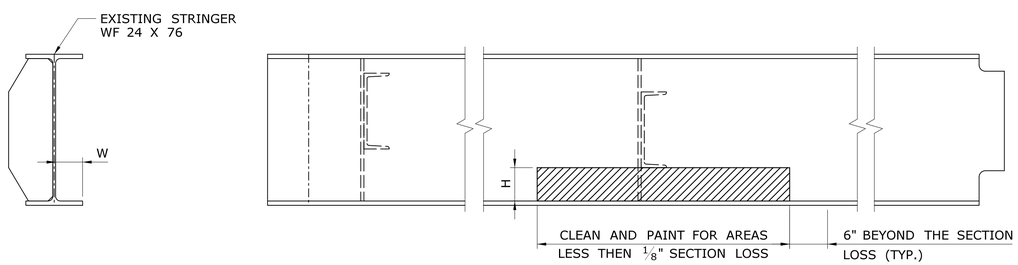

"H" = VERTICAL LIMITS OF CLEAN AND PAINT WEB HEIGHT (VARIES)
"W" = TOP OF FLANGE LIMITS OF CLEAN AND PAINT (VARIES)

EXISTING FASCIA STRINGER SPAN P-1
EAST FRAMING OVER COUNTERWEIGHT

SCALE: 1" = 1'-0"

PAINTING NOTES:

1. CLEANING AND PAINTING OF AREAS DEPICTED IN THE PLANS OR IDENTIFIED BY THE ENGINEER SHALL BE PAID FOR UNDER THE ITEM "LOCALIZED PAINT REMOVAL AND FIELD PAINTING OF EXISTING STEEL", SEE SPECIAL PROVISIONS.
2. EXACT COLOR OF TOP COAT TO BE DETERMINED BY THE ENGINEER. PROPOSED PAINT TO MATCH EXISTING AS CLOSE AS POSSIBLE.

REV.	DATE	REVISION DESCRIPTION	SHEET NO.

THE INFORMATION, INCLUDING ESTIMATED QUANTITIES OF WORK, SHOWN ON THESE SHEETS IS BASED ON LIMITED INVESTIGATIONS BY THE STATE AND IS IN NO WAY WARRANTED TO INDICATE THE CONDITIONS OF ACTUAL QUANTITIES OF WORK WHICH WILL BE REQUIRED.

Plotted Date: 9/25/2018

DESIGNER/DRAFTER: B.A./S.C.
CHECKED BY: J.H.M. II
SCALE AS NOTED

STATE OF CONNECTICUT
DEPARTMENT OF TRANSPORTATION

Filename: ...\SB_MSH_173_462_BR02295_S-58_Painting.dgn

SIGNATURE/BLOCK:
Close, Jensen and Miller, P.C.
1137 Silas Deane Highway
Wethersfield, CT 06109

PROJECT TITLE:
REHABILITATION OF BRIDGE NO. 02295, ROUTE 136 OVER NORWALK RIVER

TOWN: NORWALK

DRAWING TITLE: STEEL REPAIRS AND PAINTING LIMITS

PROJECT NO. 173-462
DRAWING NO. S-58
SHEET NO. 03.58

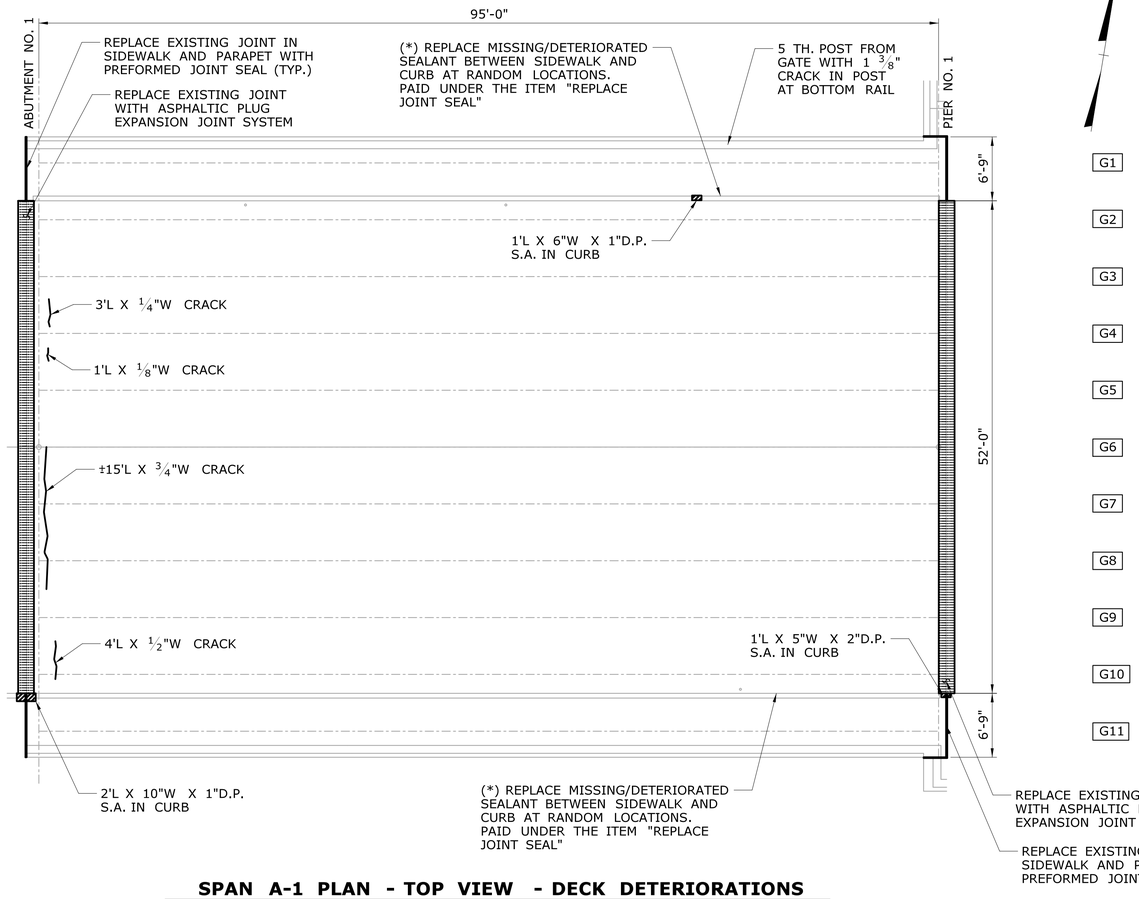

SPAN A-1 PLAN - TOP VIEW - DECK DETERIORATIONS

SCALE: 1/8" = 1'-0"

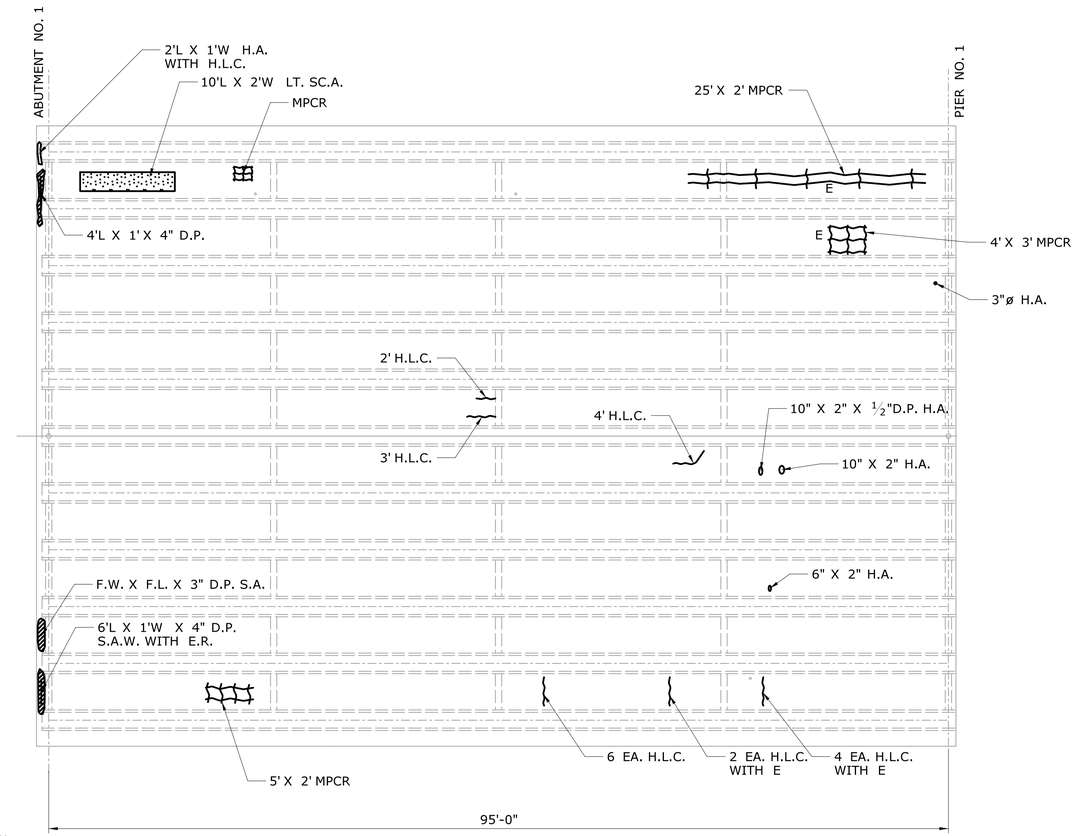

SPAN A-1 PLAN - TOP VIEW - UNDERSIDE DECK DETERIORATIONS

SCALE: 1/8" = 1'-0"

LEGEND

- CRACK (HAIRLINE UNLESS DIMENSIONED OTHERWISE) (H.L.C.)
- SPALL AREA WITH EXPOSED REINFORCING (S.A. W/E.R.)
- SPALL AREA (S.A.)
- HOLLOW AREA (H.A.)
- SHALLOW REBAR (SH. A.)
- HONEY COMB AREA (H.C.A.)
- SCALE AREA (SC. A.)
- MAP CRACKS (MPCR)
- E EFFLORESCENCE (E)

KEY

F.H. = FULL HEIGHT
F.W. = FULL WIDTH
F.L. = FULL LENGTH
D.P. = DEEP

T.F. = TOP FLANGE
B.F. = BOTTOM FLANGE
L.R. = LAMINAR RUST
S.L. = SECTION LOSS
NEG. = NEGLIGIBLE

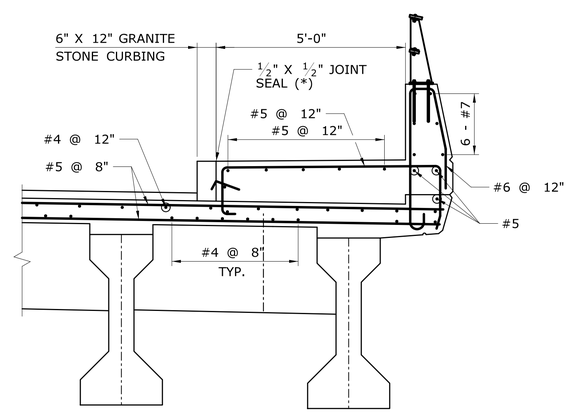

TYPICAL SIDEWALK SECTION (SPANS A-1, P-2 AND P-3)

SCALE: 1/2" = 1'-0"

REFERENCES:

1. SEE DWG. NOS. S-67 AND S-68 FOR DECK REPAIR NOTES AND DETAILS.
2. SEE DWG. NO S-69 FOR DECK END RECONSTRUCTION DETAILS AND NOTES.
3. SEE DWG. NOS. S-74 AND S-75 FOR "ASPHALTIC PLUG EXPANSION JOINT SYSTEM" DETAILS AND NOTES.

REV.	DATE	REVISION DESCRIPTION	SHEET NO.

THE INFORMATION, INCLUDING ESTIMATED QUANTITIES OF WORK, SHOWN ON THESE SHEETS IS BASED ON LIMITED INVESTIGATIONS BY THE STATE AND IS IN NO WAY WARRANTED TO INDICATE THE CONDITIONS OF ACTUAL QUANTITIES OF WORK WHICH WILL BE REQUIRED.

Plotted Date: 9/25/2018

DESIGNER/DRAFTER: B.A./S.C.
CHECKED BY: J.H.M. II
SCALE: 1/8" = 1'-0"

STATE OF CONNECTICUT
DEPARTMENT OF TRANSPORTATION

Filename: ...\SB_MSH_173_462_BR02295_S-59_DECK_SPAN-A-1.dgn

SIGNATURE/BLOCK:
Close, Jensen and Miller, P.C.
1137 Silas Deane Highway
Wethersfield, CT 06109

PROJECT TITLE:
REHABILITATION OF BRIDGE NO. 02295, ROUTE 136 OVER NORWALK RIVER

TOWN: NORWALK

DRAWING TITLE: DECK PLAN SPAN A-1

PROJECT NO. 173-462
DRAWING NO. S-59
SHEET NO. 03.59

THIS SHEET IS FOR INFORMATION ONLY AND IS TO BE COMPLETED BY THE ENGINEER ON A FULL SIZE PAPER COPY OF THIS SHEET. THE COMPLETED DRAWING SHALL BE FORWARDED TO THE MANAGER OF BRIDGE SAFETY AND EVALUATION.

INSPECTOR NOTES

PERCENTAGE AND QUANTITIES

DATES:	START OF REPAIRS		
	COMPLETION OF REPAIRS		
PARTIAL DEPTH PATCH		%	QTY.
HYDRO-DEMOLITION			
PNEUMATIC HAMMER			
TOTALS			
FULL DEPTH PATCH		%	QTY.
HYDRO-DEMOLITION			
PNEUMATIC HAMMER			
TOTALS			

DECK PATCHING LEGEND:

- EXISTING PATCHED AREA (FULL-DEPTH AND PARTIAL DEPTH) APPROXIMATE % OF TOTAL DECK AREA =
- DENOTES THE LIMITS OF REMOVAL BY HYDRO-DEMOLITION, REPLACE WITH PARTIAL DEPTH PATCH.
- DENOTES THE LIMITS OF REMOVAL BY PNEUMATIC HAMMER, REPLACE WITH PARTIAL-DEPTH PATCH.
- DENOTES THE LIMITS OF REMOVAL OF HYDRO-DEMOLITION, REPLACE WITH FULL DEPTH PATCH.
- DENOTES THE LIMITS OF REMOVAL BY PNEUMATIC HAMMER, REPLACE WITH FULL DEPTH PATCH.

THE ENGINEER SHALL INDICATE THE FOLLOWING:

1. THE BEGINNING AND COMPLETION DATES OF REPAIRS.
2. THE LIMITS OF EXISTING AND FINISHED PATCHED DECK AREAS ON THE PLAN USING THE PATTERN SHOWN IN THE DECK PATCHING LEGEND. (SEE EXAMPLE PLAN)
3. THE APPROXIMATE PERCENTAGE OF TOTAL DECK AREA REPAIRED WITH PARTIAL AND FULL DEPTH PATCHES.
4. THE FINAL QUANTITIES OF PARTIAL AND FULL DEPTH PATCHING MATERIALS USED IN THE DECK REPAIRS.
5. THE METHOD AND LIMIT OF REMOVAL OF THE DETERIORATED CONCRETE FOR EXAMPLE PNEUMATIC HAMMER OR HYDRO-DEMOLITION AS INDICATED ON THE DECK PLAN SHALL BE PAID FOR UNDER THE ITEM "PARTIAL DEPTH PATCH".

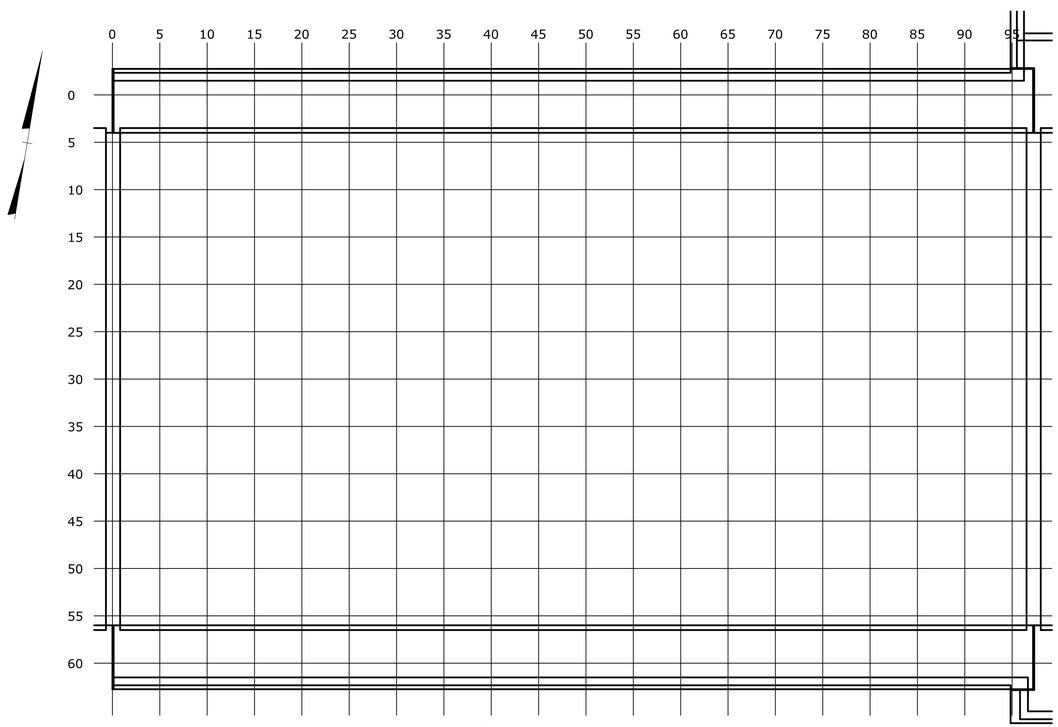

SPAN A-1 PLAN

SCALE: 1/8" = 1'-0"

REV.	DATE	REVISION DESCRIPTION	SHEET NO.

THE INFORMATION, INCLUDING ESTIMATED QUANTITIES OF WORK, SHOWN ON THESE SHEETS IS BASED ON LIMITED INVESTIGATIONS BY THE STATE AND IS IN NO WAY WARRANTED TO INDICATE THE CONDITIONS OF ACTUAL QUANTITIES OF WORK WHICH WILL BE REQUIRED.

Plotted Date: 9/25/2018

DESIGNER/DRAFTER: B.A./S.C.

CHECKED BY: J.H.M. II

SCALE AS NOTED

STATE OF CONNECTICUT
DEPARTMENT OF TRANSPORTATION

Filename: ...\SB_MSH_173_462_BR02295_S-60_DECK_GRID_SPAN-A-1.dgn

SIGNATURE/BLOCK:

Close, Jensen and Miller, P.C.
1137 Silas Deane Highway
Wethersfield, CT 06109

PROJECT TITLE:

REHABILITATION OF BRIDGE NO. 02295, ROUTE 136 OVER NORWALK RIVER

TOWN: **NORWALK**

DRAWING TITLE: **DECK PLAN GRID SPAN A-1**

PROJECT NO. **173-462**

DRAWING NO. **S-60**

SHEET NO. **03.60**

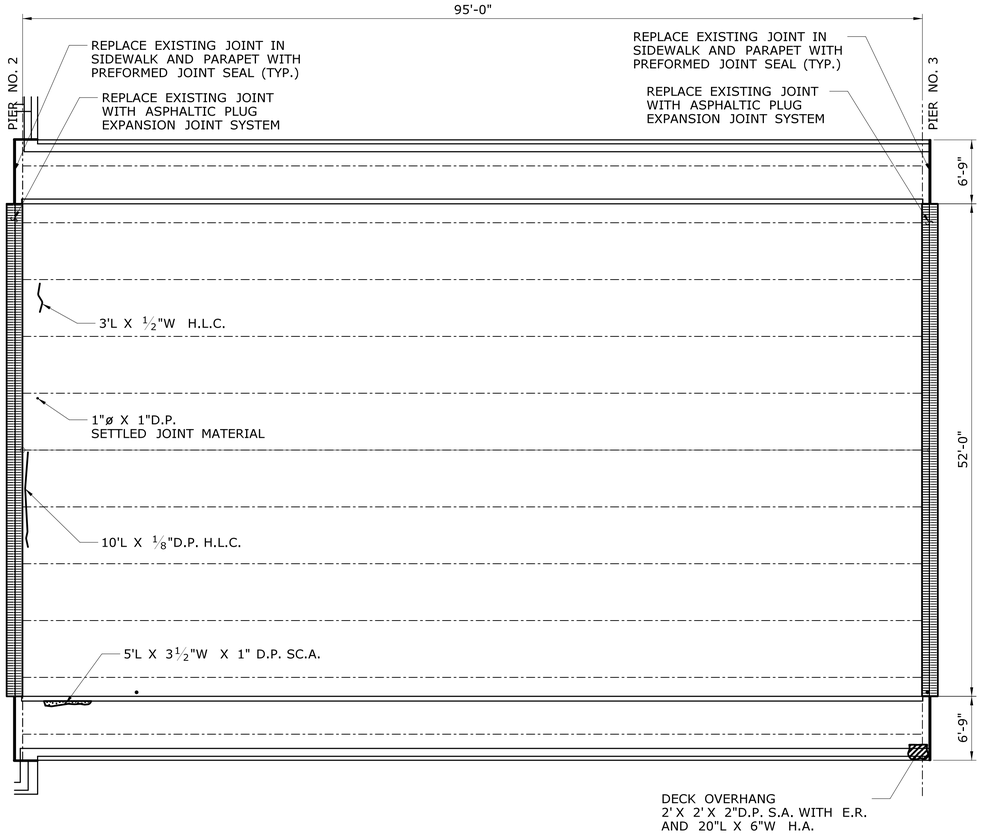

SPAN P-2 PLAN - TOP VIEW - DECK DETERIORATIONS

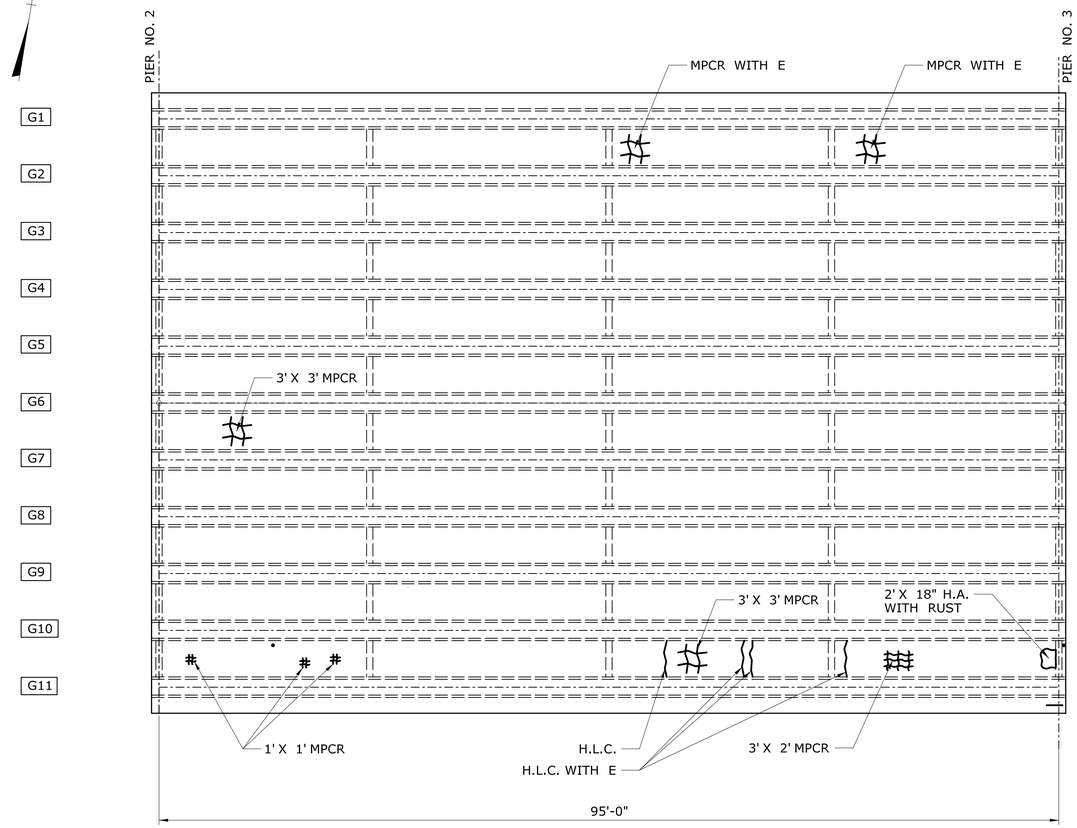

SPAN P-2 PLAN - TOP VIEW - UNDERSIDE DECK DETERIORATIONS

LEGEND

- CRACK (HAIRLINE UNLESS DIMENSIONED OTHERWISE) (H.L.C.)
- SPALL AREA WITH EXPOSED REINFORCING (S.A. W/E.R.)
- SPALL AREA (S.A.)
- HOLLOW AREA (H.A.)
- SHALLOW REBAR (SH. A.)
- HONEY COMB AREA (H.C.A.)
- SCALE AREA (SC. A.)
- MAP CRACKS (MPCR)
- E EFFLORESCENCE (E)

KEY

F.H. = FULL HEIGHT
F.W. = FULL WIDTH
F.L. = FULL LENGTH
D.P. = DEEP

T.F. = TOP FLANGE
B.F. = BOTTOM FLANGE
L.R. = LAMINAR RUST
S.L. = SECTION LOSS
NEG. = NEGLIGIBLE

REFERENCES:

1. SEE DWG. NOS. S-67 AND S-68 FOR DECK REPAIR NOTES AND DETAILS.
2. SEE DWG. NO S-69 FOR DECK END RECONSTRUCTION DETAILS AND NOTES.
3. SEE DWG. NOS. S-74 AND S-75 FOR "ASPHALTIC PLUG EXPANSION JOINT SYSTEM" DETAILS AND NOTES.

REV.	DATE	REVISION DESCRIPTION	SHEET NO.

THE INFORMATION, INCLUDING ESTIMATED QUANTITIES OF WORK, SHOWN ON THESE SHEETS IS BASED ON LIMITED INVESTIGATIONS BY THE STATE AND IS IN NO WAY WARRANTED TO INDICATE THE CONDITIONS OF ACTUAL QUANTITIES OF WORK WHICH WILL BE REQUIRED.

Plotted Date: 9/25/2018

DESIGNER/DRAFTER: B.A./S.C.
CHECKED BY: J.H.M. II
SCALE: 1/8" = 1'-0"

STATE OF CONNECTICUT
DEPARTMENT OF TRANSPORTATION

Filename: ...\SB_MSH_173_462_BR02295_S-61_DECK_SPAN-P-2.dgn

SIGNATURE/BLOCK:
Close, Jensen and Miller, P.C.
1137 Silas Deane Highway
Wethersfield, CT 06109

PROJECT TITLE:
REHABILITATION OF BRIDGE NO. 02295, ROUTE 136 OVER NORWALK RIVER

TOWN: **NORWALK**

DRAWING TITLE: **DECK PLAN SPAN P-2**

PROJECT NO. 173-462
DRAWING NO. S-61
SHEET NO. 03.61

THIS SHEET IS FOR INFORMATION ONLY AND IS TO BE COMPLETED BY THE ENGINEER ON A FULL SIZE PAPER COPY OF THIS SHEET. THE COMPLETED DRAWING SHALL BE FORWARDED TO THE MANAGER OF BRIDGE SAFETY AND EVALUATION.

INSPECTOR NOTES

PERCENTAGE AND QUANTITIES

DATES:	START OF REPAIRS		
	COMPLETION OF REPAIRS		
PARTIAL DEPTH PATCH		%	QTY.
HYDRO-DEMOLITION			
PNEUMATIC HAMMER			
TOTALS			
FULL DEPTH PATCH		%	QTY.
HYDRO-DEMOLITION			
PNEUMATIC HAMMER			
TOTALS			

DECK PATCHING LEGEND:

EXISTING PATCHED AREA (FULL-DEPTH AND PARTIAL DEPTH)
APPROXIMATE % OF TOTAL DECK AREA =

DENOTES THE LIMITS OF REMOVAL BY HYDRO-DEMOLITION, REPLACE WITH PARTIAL DEPTH PATCH.

DENOTES THE LIMITS OF REMOVAL BY PNEUMATIC HAMMER, REPLACE WITH PARTIAL-DEPTH PATCH.

DENOTES THE LIMITS OF REMOVAL OF HYDRO-DEMOLITION, REPLACE WITH FULL DEPTH PATCH.

DENOTES THE LIMITS OF REMOVAL BY PNEUMATIC HAMMER, REPLACE WITH FULL DEPTH PATCH.

THE ENGINEER SHALL INDICATE THE FOLLOWING:

1. THE BEGINNING AND COMPLETION DATES OF REPAIRS.
2. THE LIMITS OF EXISTING AND FINISHED PATCHED DECK AREAS ON THE PLAN USING THE PATTERN SHOWN IN THE DECK PATCHING LEGEND. (SEE EXAMPLE PLAN)
3. THE APPROXIMATE PERCENTAGE OF TOTAL DECK AREA REPAIRED WITH PARTIAL AND FULL DEPTH PATCHES.
4. THE FINAL QUANTITIES OF PARTIAL AND FULL DEPTH PATCHING MATERIALS USED IN THE DECK REPAIRS.
5. THE METHOD AND LIMIT OF REMOVAL OF THE DETERIORATED CONCRETE FOR EXAMPLE PNEUMATIC HAMMER OR HYDRO-DEMOLITION AS INDICATED ON THE DECK PLAN SHALL BE PAID FOR UNDER THE ITEM "PARTIAL DEPTH PATCH".

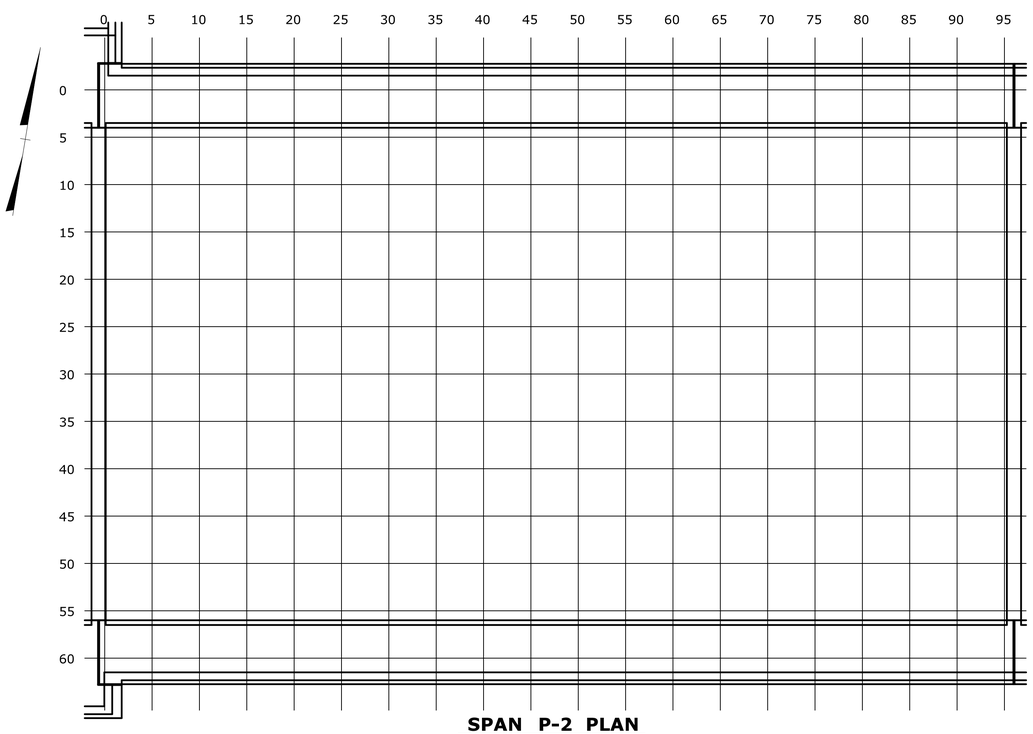

SPAN P-2 PLAN

SCALE: 1/8" = 1'-0"

REV.	DATE	REVISION DESCRIPTION	SHEET NO.

THE INFORMATION, INCLUDING ESTIMATED QUANTITIES OF WORK, SHOWN ON THESE SHEETS IS BASED ON LIMITED INVESTIGATIONS BY THE STATE AND IS IN NO WAY WARRANTED TO INDICATE THE CONDITIONS OF ACTUAL QUANTITIES OF WORK WHICH WILL BE REQUIRED.

Plotted Date: 9/25/2018

DESIGNER/DRAFTER: B.A./S.C.
CHECKED BY: J.H.M. II
SCALE AS NOTED

STATE OF CONNECTICUT
DEPARTMENT OF TRANSPORTATION

Filename: ..\SB_MSH_173_462_BR02295_S-62_DECK_GRID_SPAN-P-2.dgn

SIGNATURE/BLOCK:
Close, Jensen and Miller, P.C.
1137 Silas Deane Highway
Wethersfield, CT 06109

PROJECT TITLE:
REHABILITATION OF BRIDGE NO. 02295, ROUTE 136 OVER NORWALK RIVER

TOWN: NORWALK

DRAWING TITLE: **DECK PLAN GRID SPAN P-2**

PROJECT NO. 173-462
DRAWING NO. S-62
SHEET NO. 03.62

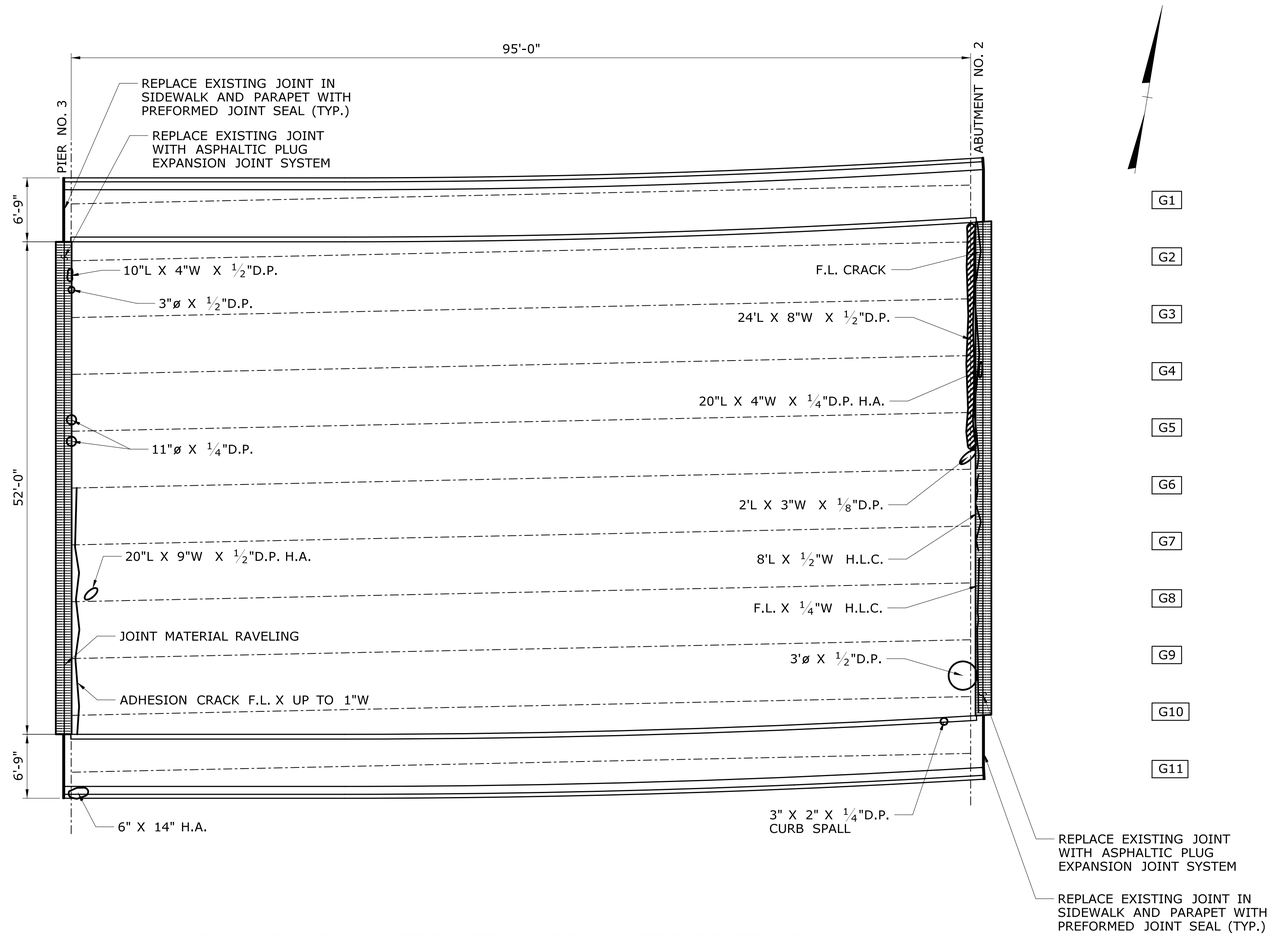

SPAN P-3 PLAN - TOP VIEW - DECK DETERIORATIONS

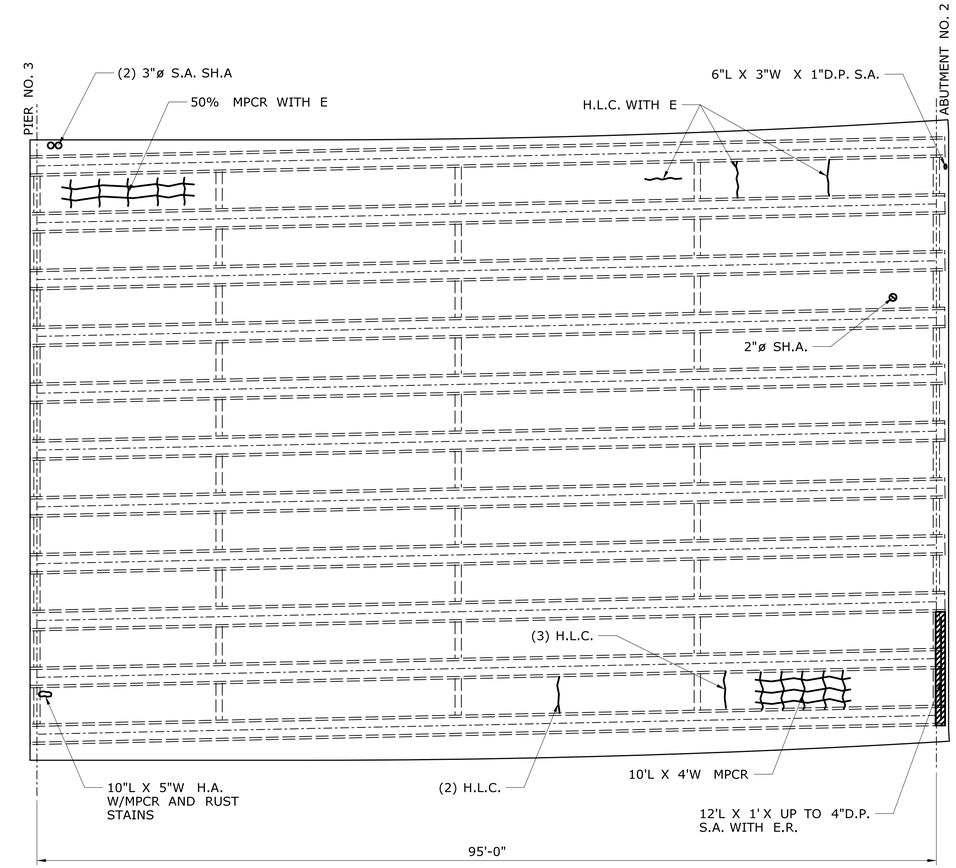

SPAN P-3 PLAN - TOP VIEW - UNDERSIDE DECK DETERIORATIONS

LEGEND

- CRACK (HAIRLINE UNLESS DIMENSIONED OTHERWISE) (H.L.C.)
- SPALL AREA WITH EXPOSED REINFORCING (S.A. W/E.R.)
- SPALL AREA (S.A.)
- HOLLOW AREA (H.A.)
- SHALLOW REBAR (SH. A.)
- HONEY COMB AREA (H.C.A.)
- SCALE AREA (SC. A.)
- MAP CRACKS (MPCR)
- E EFFLORESCENCE (E)

KEY

F.H. = FULL HEIGHT
F.W. = FULL WIDTH
F.L. = FULL LENGTH
D.P. = DEEP

T.F. = TOP FLANGE
B.F. = BOTTOM FLANGE
L.R. = LAMINAR RUST
S.L. = SECTION LOSS
NEG. = NEGLIGIBLE

REFERENCES:

1. SEE DWG. NOS. S-67 AND S-68 FOR DECK REPAIR NOTES AND DETAILS.
2. SEE DWG. NO S-69 FOR DECK END RECONSTRUCTION DETAILS AND NOTES.
3. SEE DWG. NOS. S-74 AND S-75 FOR "ASPHALTIC PLUG EXPANSION JOINT SYSTEM" DETAILS AND NOTES.

REV.	DATE	REVISION DESCRIPTION	SHEET NO.
-	-	-	-
-	-	-	-
-	-	-	-
-	-	-	-
-	-	-	-
-	-	-	-

THE INFORMATION, INCLUDING ESTIMATED QUANTITIES OF WORK, SHOWN ON THESE SHEETS IS BASED ON LIMITED INVESTIGATIONS BY THE STATE AND IS IN NO WAY WARRANTED TO INDICATE THE CONDITIONS OF ACTUAL QUANTITIES OF WORK WHICH WILL BE REQUIRED.

Plotted Date: 9/25/2018

DESIGNER/DRAFTER: B.A./S.C.
CHECKED BY: J.H.M. II
SCALE: 1/8" = 1'-0"

STATE OF CONNECTICUT
DEPARTMENT OF TRANSPORTATION

Filename: ..\SB_MSH_173_462_BR02295_S-63_DECK_SPAN-P-3.dgn

SIGNATURE/BLOCK:
Close, Jensen and Miller, P.C.
1137 Silas Deane Highway
Wethersfield, CT 06109

PROJECT TITLE: REHABILITATION OF BRIDGE NO. 02295, ROUTE 136 OVER NORWALK RIVER

TOWN: NORWALK

DRAWING TITLE: DECK PLAN SPAN P-3

PROJECT NO. 173-462
DRAWING NO. S-63
SHEET NO. 03.63

THIS SHEET IS FOR INFORMATION ONLY AND IS TO BE COMPLETED BY THE ENGINEER ON A FULL SIZE PAPER COPY OF THIS SHEET. THE COMPLETED DRAWING SHALL BE FORWARDED TO THE MANAGER OF BRIDGE SAFETY AND EVALUATION.

INSPECTOR NOTES

PERCENTAGE AND QUANTITIES

DATES:	START OF REPAIRS		
	COMPLETION OF REPAIRS		
PARTIAL DEPTH PATCH		%	QTY.
HYDRO-DEMOLITION			
PNEUMATIC HAMMER			
TOTALS			
FULL DEPTH PATCH		%	QTY.
HYDRO-DEMOLITION			
PNEUMATIC HAMMER			
TOTALS			

DECK PATCHING LEGEND:

EXISTING PATCHED AREA (FULL-DEPTH AND PARTIAL DEPTH) APPROXIMATE % OF TOTAL DECK AREA =

DENOTES THE LIMITS OF REMOVAL BY HYDRO-DEMOLITION, REPLACE WITH PARTIAL DEPTH PATCH.

DENOTES THE LIMITS OF REMOVAL BY PNEUMATIC HAMMER, REPLACE WITH PARTIAL-DEPTH PATCH.

DENOTES THE LIMITS OF REMOVAL OF HYDRO-DEMOLITION, REPLACE WITH FULL DEPTH PATCH.

DENOTES THE LIMITS OF REMOVAL BY PNEUMATIC HAMMER, REPLACE WITH FULL DEPTH PATCH.

THE ENGINEER SHALL INDICATE THE FOLLOWING:

1. THE BEGINNING AND COMPLETION DATES OF REPAIRS.
2. THE LIMITS OF EXISTING AND FINISHED PATCHED DECK AREAS ON THE PLAN USING THE PATTERN SHOWN IN THE DECK PATCHING LEGEND. (SEE EXAMPLE PLAN)
3. THE APPROXIMATE PERCENTAGE OF TOTAL DECK AREA REPAIRED WITH PARTIAL AND FULL DEPTH PATCHES.
4. THE FINAL QUANTITIES OF PARTIAL AND FULL DEPTH PATCHING MATERIALS USED IN THE DECK REPAIRS.
5. THE METHOD AND LIMIT OF REMOVAL OF THE DETERIORATED CONCRETE FOR EXAMPLE PNEUMATIC HAMMER OR HYDRO-DEMOLITION AS INDICATED ON THE DECK PLAN SHALL BE PAID FOR UNDER THE ITEM "PARTIAL DEPTH PATCH".

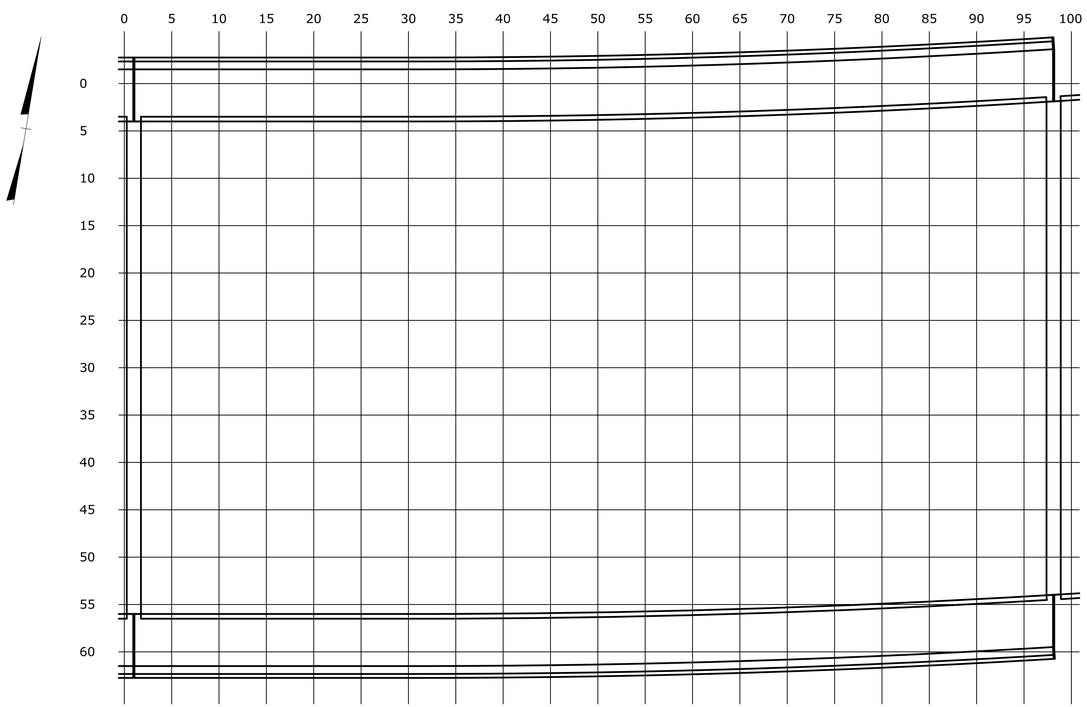

SPAN P-3 PLAN

SCALE: 1/8" = 1'-0"

REV.	DATE	REVISION DESCRIPTION	SHEET NO.

THE INFORMATION, INCLUDING ESTIMATED QUANTITIES OF WORK, SHOWN ON THESE SHEETS IS BASED ON LIMITED INVESTIGATIONS BY THE STATE AND IS IN NO WAY WARRANTED TO INDICATE THE CONDITIONS OF ACTUAL QUANTITIES OF WORK WHICH WILL BE REQUIRED.

Plotted Date: 9/25/2018

DESIGNER/DRAFTER: B.A./S.C.

CHECKED BY: J.H.M. II

SCALE AS NOTED

STATE OF CONNECTICUT
DEPARTMENT OF TRANSPORTATION

Filename: ...\SB_MSH_173_462_BR02295_S-64_DECK_GRID_SPAN-P-3.dgn

SIGNATURE/BLOCK:

Close, Jensen and Miller, P.C.
1137 Silas Deane Highway
Wethersfield, CT 06109

PROJECT TITLE:
REHABILITATION OF BRIDGE NO. 02295, ROUTE 136 OVER NORWALK RIVER

TOWN: NORWALK

DRAWING TITLE: DECK PLAN GRID SPAN P-3

PROJECT NO. 173-462

DRAWING NO. S-64

SHEET NO. 03.64

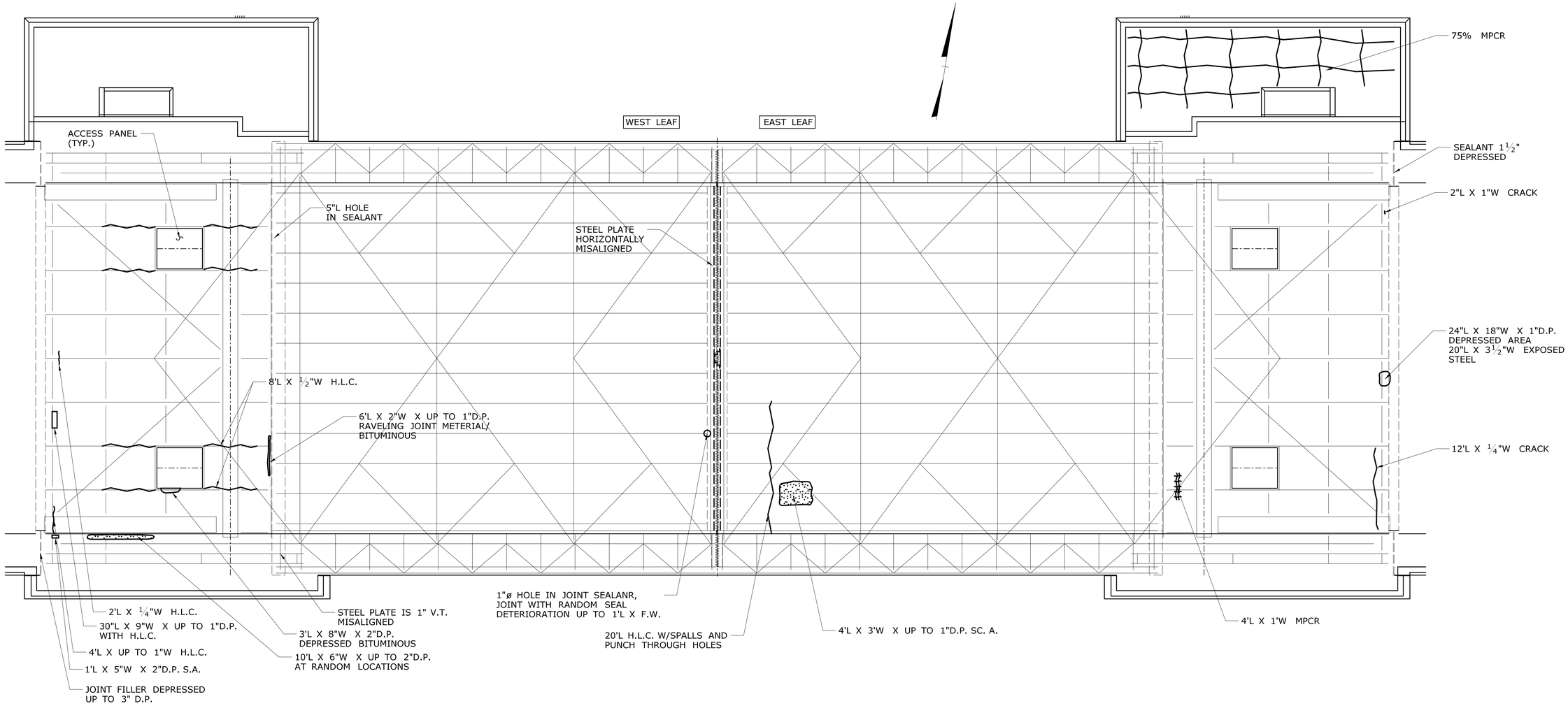

SPAN P-1 WEST OVER COUNTERWEIGHT

SPAN P-1 EAST OVER COUNTERWEIGHT

SPAN P-1 PLAN - TOP VIEW

LEGEND

- CRACK (HAIRLINE UNLESS DIMENSIONED OTHERWISE) (H.L.C.)
- SPALL AREA WITH EXPOSED REINFORCING (S.A. W/E.R.)
- SPALL AREA (S.A.)
- HOLLOW AREA (H.A.)
- SHALLOW REBAR (SH. A.)
- HONEY COMB AREA (H.C.A.)
- SCALE AREA (SC. A.)
- MAP CRACKS (MPCR)
- E EFFLORESCENCE (E)

KEY

F.H. = FULL HEIGHT
F.W. = FULL WIDTH
F.L. = FULL LENGTH
D.P. = DEEP

T.F. = TOP FLANGE
B.F. = BOTTOM FLANGE
L.R. = LAMINAR RUST
S.L. = SECTION LOSS
NEG. = NEGLIGIBLE
V.T. = VERTICAL

REV.	DATE	REVISION DESCRIPTION	SHEET NO.

THE INFORMATION, INCLUDING ESTIMATED QUANTITIES OF WORK, SHOWN ON THESE SHEETS IS BASED ON LIMITED INVESTIGATIONS BY THE STATE AND IS IN NO WAY WARRANTED TO INDICATE THE CONDITIONS OF ACTUAL QUANTITIES OF WORK WHICH WILL BE REQUIRED.

Plotted Date: 9/25/2018

DESIGNER/DRAFTER: **B.A./S.C.**
CHECKED BY: **J.H.M. II**
SCALE: 1/8" = 1'-0"

STATE OF CONNECTICUT
DEPARTMENT OF TRANSPORTATION

Filename: ...\SB_MSH_173_462_BR02295_S-65_DECK_SPAN-P-1-TOP.dgn

SIGNATURE/ BLOCK:
Close, Jensen and Miller, P.C.
1137 Silas Deane Highway
Wethersfield, CT 06109

PROJECT TITLE:
REHABILITATION OF BRIDGE NO. 02295, ROUTE 136 OVER NORWALK RIVER

TOWN: **NORWALK**

DRAWING TITLE: **DECK PLAN SPAN P-1 (TOP)**

PROJECT NO. **173-462**
DRAWING NO. **S-65**
SHEET NO. **03.65**

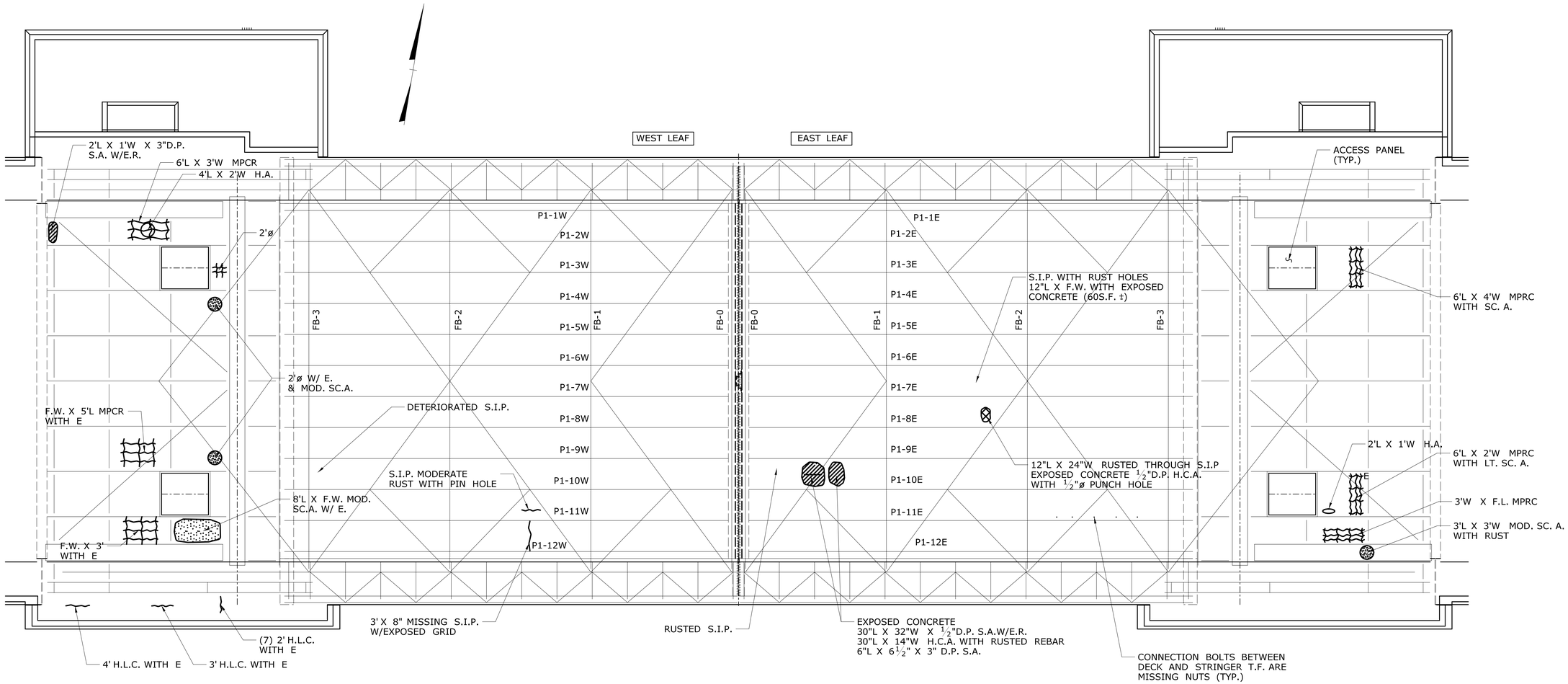

SPAN P-1 WEST OVER COUNTERWEIGHT

SPAN P-1 EAST OVER COUNTERWEIGHT

SPAN P-1 PLAN - UNDERSIDE

NOTE:

LOOSE CONCRETE OVER CHANNEL WAS REMOVED.

LEGEND

- CRACK (HAIRLINE UNLESS DIMENSIONED OTHERWISE) (H.L.C.)
- SPALL AREA WITH EXPOSED REINFORCING (S.A. W/E.R.)
- SPALL AREA (S.A.)
- HOLLOW AREA (H.A.)
- SHALLOW REBAR (SH. A.)
- HONEY COMB AREA (H.C.A.)
- SCALE AREA (SC. A.)
- MAP CRACKS (MPCR)
- E EFFLORESCENCE (E)

KEY

F.H. = FULL HEIGHT
F.W. = FULL WIDTH
F.L. = FULL LENGTH
D.P. = DEEP

T.F. = TOP FLANGE
B.F. = BOTTOM FLANGE
L.R. = LAMINAR RUST
S.L. = SECTION LOSS
NEG. = NEGLIGIBLE
S.I.P. = STAY-IN-PLACE FORMS

REV.	DATE	REVISION DESCRIPTION	SHEET NO.

THE INFORMATION, INCLUDING ESTIMATED QUANTITIES OF WORK, SHOWN ON THESE SHEETS IS BASED ON LIMITED INVESTIGATIONS BY THE STATE AND IS IN NO WAY WARRANTED TO INDICATE THE CONDITIONS OF ACTUAL QUANTITIES OF WORK WHICH WILL BE REQUIRED.

Plotted Date: 9/25/2018

DESIGNER/DRAFTER: B.A./S.C.
CHECKED BY: J.H.M. II
SCALE: 1/8" = 1'-0"

STATE OF CONNECTICUT
DEPARTMENT OF TRANSPORTATION

Filename: ...\SB_MSH_173_462_BR02295_S-66_DECK_SPAN-P-1-BOTT.dgn

SIGNATURE/BLOCK:
Close, Jensen and Miller, P.C.
1137 Silas Deane Highway
Wethersfield, CT 06109

PROJECT TITLE: REHABILITATION OF BRIDGE NO. 02295, ROUTE 136 OVER NORWALK RIVER

TOWN: NORWALK

DRAWING TITLE: DECK PLAN SPAN P-1 (BOTTOM)

PROJECT NO. 173-462
DRAWING NO. S-66
SHEET NO. 03.66

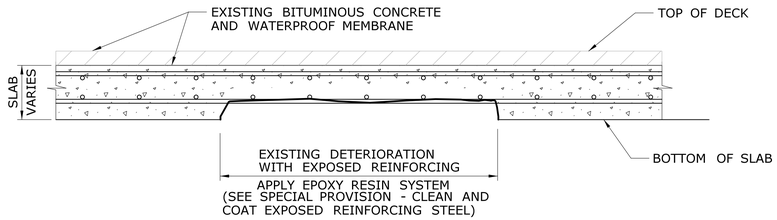

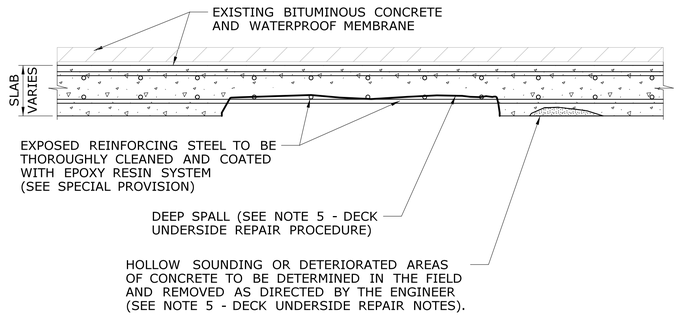

DECK UNDERSIDE REPAIR PROCEDURE

1. REMOVE DETERIORATED CONCRETE TO SOUND CONCRETE TO THE LIMITS SHOW ON THE PLANS OR AS DIRECTED BY THE ENGINEER.
2. CLEAN THE SOUND CONCRETE SURFACE AREA AND EXPOSED REINFORCING STEEL OF ALL LOOSE OR POWDER-LIKE RUST, OIL, DUST, DIRT, LOOSE PARTICLES, AND OTHER BOND INHIBITING MATTER BY AN APPROVED METHOD.
3. COAT THE EXPOSED REINFORCING STEEL WITH EPOXY RESIN.
4. PRESERVE EXPOSED REINFORCING STEEL, IF ANY.
5. AT LOCATIONS WHERE SPALLS OR DELAMINATED CONCRETE ON THE UNDERSIDE OF THE DECK ARE DEEPER THAN HALF THE SLAB THICKNESS, REMOVE THE SLAB CONCRETE FULL DEPTH, AND REPAIR AS "FULL DEPTH PATCH (HIGH EARLY STRENGTH CONCRETE)". IF LESS THAN 50% OF THE DIAMETER OF ANY REINFORCEMENT BAR IS EXPOSED OR IF THE BAR HAS LESS THAN 1 FOOT IN LENGTH WITH MORE THAN 50% OF ITS DIAMETER EXPOSED, THE TYPICAL TREATMENT IS TO CLEAN AND COAT THE BAR. IF ANY BAR IS EXPOSED MORE THAN THOSE PARAMETERS, THEN PROPER TREATMENT IS "FULL DEPTH PATCH (HIGH EARLY STRENGTH CONCRETE)".

DECK UNDERSIDE REPAIRS

(CLEAN AND COAT EXPOSED REINFORCING STEEL)
N.T.S.

DECK UNDERSIDE REPAIR NOTES:

1. EPOXY COATING THE DECK UNDERSIDE REINFORCEMENT SHALL BE PERFORMED IN ACCORDANCE WITH DETAILS SHOWN ON THIS SHEET AND THE SPECIAL PROVISIONS. THIS WORK SHALL BE PAID UNDER THE ITEM "CLEAN AND COAT EXPOSED REINFORCING STEEL" (SEE SPECIAL PROVISIONS).
2. ALL WORK SHALL BE CONTAINED BY A STRUCTURALLY ADEQUATE SHIELD APPROVED BY THE ENGINEER IN ACCORDANCE WITH THE REQUIREMENTS CONTAINED ELSEWHERE IN THE CONTRACT DOCUMENTS. THE COST OF THIS SHALL BE PAID FOR UNDER THE APPROPRIATE PAY ITEM.
3. THE EXISTING SLAB UNDERSIDE SHALL BE SOUNDED FOR HOLLOW AREAS OF CONCRETE TO THE SATISFACTION OF THE ENGINEER. THE CONTRACTOR SHALL PROVIDE SAFE ACCESS TO THE ENGINEER FOR DELINEATION AND INSPECTION OF THE DECK UNDERSIDE, AND THE REPAIR WORK. THE COST OF PROVIDING ACCESS FOR THE INSPECTION SHALL BE INCLUDED IN THE COST OF THE ITEM "CLEAN AND COAT EXPOSED REINFORCING STEEL" (SEE SPECIAL PROVISIONS).
4. ALL EXPOSED REINFORCING STEEL SHALL BE THOROUGHLY CLEANED TO REMOVE ANY DEBRIS OR RESIDUE BEFORE APPLYING THE EPOXY RESIN COATING (SEE SPECIAL PROVISION).
5. ANY EXPOSED REINFORCING STEEL IN THE AREAS OF POP-OUTS CAUSED BY THE REMOVAL OF DETERIORATED CONCRETE SHALL BE CLEANED AND COATED WITH EPOXY RESIN COATING. ALL WORK SHALL BE ABOVE THE EXISTING LOW CHORD ELEVATION.
6. THE CONTRACTOR SHALL NOT PERFORM ANY REPAIR WORK WITHOUT PRIOR APPROVAL FROM THE ENGINEER. THE REMOVAL OF DETERIORATED CONCRETE SHALL PROCEED AS DIRECTED BY THE ENGINEER.

FULL DEPTH PATCH REPAIR NOTES

1. FULL DEPTH PATCH REPAIRS SHALL BE PERFORMED IN ACCORDANCE WITH DETAIL SHOWN AND SHALL BE PAID UNDER THE ITEM "FULL DEPTH PATCH (HIGH EARLY STRENGTH CONCRETE)" SEE SPECIAL PROVISIONS. ENGINEER TO DELINEATE LIMITS OF DETERIORATION.
2. COST OF $\frac{1}{2}$" DEEP SAW CUT SHALL BE INCLUDED IN THE CONTRACT BID PRICE FOR ITEM "FULL DEPTH PATCH (HIGH EARLY STRENGTH CONCRETE)."
3. ALL BROKEN AND DAMAGED REINFORCING STEEL BARS SHALL BE REPLACED. MINIMUM LENGTH OF SPLICE SHALL BE 40 BAR DIAMETER. MECHANICAL SPLICES MAY BE USED IF AUTHORIZED BY THE ENGINEER.
4. NEW REINFORCING STEEL, IF REQUIRED, SHALL BE IN ACCORDANCE WITH THE ITEM "FULL DEPTH PATCH (HIGH EARLY STRENGTH CONCRETE)" TO MATCH THE EXISTING CONDITIONS.
5. COST OF ADDITIONAL CONCRETE REMOVAL REQUIRED FOR THE REPAIR OF THE REINFORCING STEEL SHALL BE PAID UNDER THE ITEM "FULL DEPTH PATCH (HIGH EARLY STRENGTH CONCRETE)."
6. THE CONTRACTOR SHALL PROVIDE NECESSARY SHIELDING TO PREVENT ANY DEBRIS FROM FALLING DURING FULL DEPTH PATCH REPAIR. THE COST OF SHIELDING SHALL BE INCLUDED IN THE COST OF THE ITEM "FULL DEPTH PATCH (HIGH EARLY STRENGTH CONCRETE)." ALL WORK, INCLUDING THE FULL DEPTH SLAB FORMS, SHALL BE ABOVE THE EXISTING LOW CHORD ELEVATION.
7. DECK UNDERSIDE DETERIORATION AND REPAIR ESTIMATES ARE BASED ON LIMITED FIELD OBSERVATIONS AND BRIDGE SAFETY INSPECTION REPORTS. THE EXACT LOCATION AND LIMITS OF EXPOSED REINFORCEMENT AND HOLLOW AREAS OF CONCRETE IN THE DECK UNDERSIDE SHALL BE DETERMINED BY THE ENGINEER DURING CONSTRUCTION.

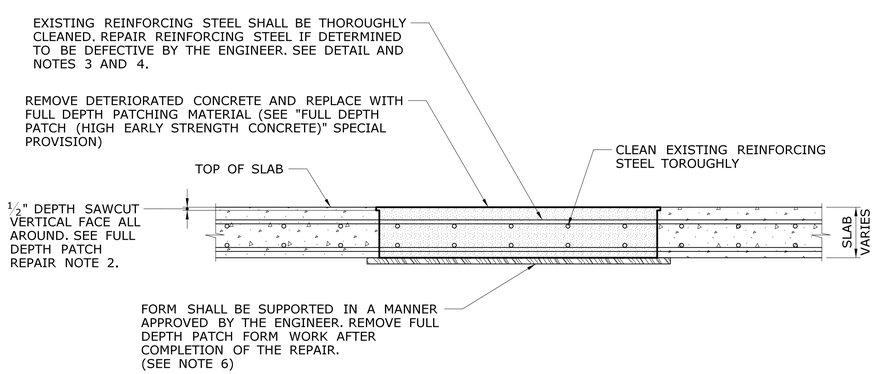

FULL DEPTH PATCH REPAIR DETAIL

N.T.S.

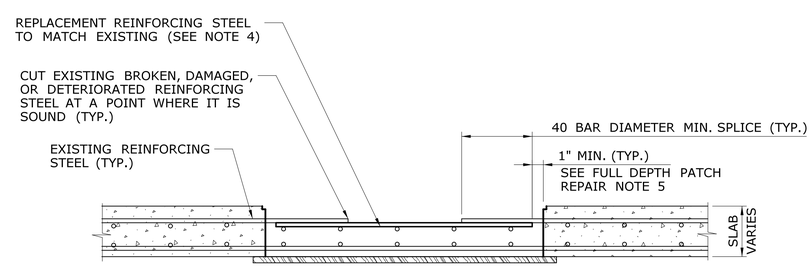

DEFECTIVE REINFORCING STEEL REPAIR DETAIL FOR FULL DEPTH PATCH

N.T.S.

REFERENCES:

SEE DWG. NOS. S-59, S-61, S-63, S-65, S-66 AND S-69 FOR DECK REPAIR LOCATIONS.

REV.	DATE	REVISION DESCRIPTION	SHEET NO.

THE INFORMATION, INCLUDING ESTIMATED QUANTITIES OF WORK, SHOWN ON THESE SHEETS IS BASED ON LIMITED INVESTIGATIONS BY THE STATE AND IS IN NO WAY WARRANTED TO INDICATE THE CONDITIONS OF ACTUAL QUANTITIES OF WORK WHICH WILL BE REQUIRED.

Plotted Date: 9/25/2018

DESIGNER/DRAFTER: B.A./S.C.
CHECKED BY: J.H.M. II
SCALE AS NOTED

STATE OF CONNECTICUT
DEPARTMENT OF TRANSPORTATION

Filename: ..\SB_MSH_173_462_BR02295_S-67_DECK_REPAIRS-1.dgn

SIGNATURE/BLOCK:
Close, Jensen and Miller, P.C.
1137 Silas Deane Highway
Wethersfield, CT 06109

PROJECT TITLE:
REHABILITATION OF BRIDGE NO. 02295, ROUTE 136 OVER NORWALK RIVER

TOWN: NORWALK

DRAWING TITLE:
DECK REHABILITATION PATCH DETAILS - 1

PROJECT NO. 173-462
DRAWING NO. S-67
SHEET NO. 03.67

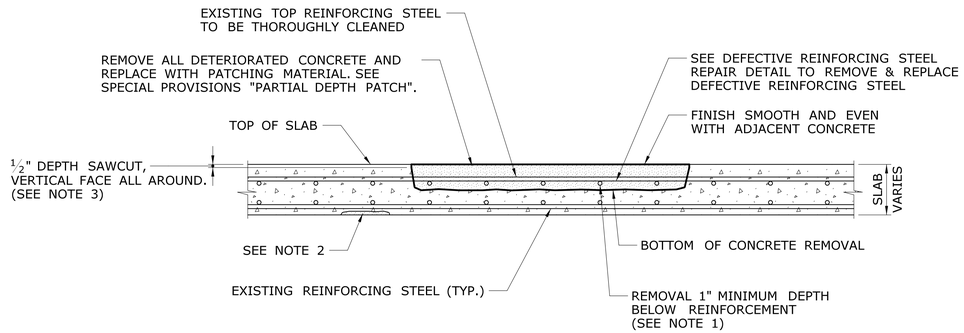

PARTIAL DEPTH PATCH REPAIR DETAIL

N.T.S.

PARTIAL DEPTH PATCH REPAIR NOTES:

1. IF, AFTER CONCRETE REMOVAL, THE REINFORCING STEEL HAS AT LEAST ONE HALF OF ITS SURFACE AREA EXPOSED, THE CONCRETE SHALL BE FURTHER REMOVED TO A DEPTH OF 1" BELOW THE STEEL. THE EXPOSED REINFORCING STEEL SHALL BE THOROUGHLY CLEANED TO REMOVE ANY DEBRIS OR RESIDUE BEFORE PLACING "PARTIAL DEPTH PATCHING" MATERIAL.
2. EXPOSED REINFORCING STEEL IN THE AREAS OF POP-OUTS CAUSED BY THE REMOVAL OF DETERIORATED CONCRETE SHALL BE CLEANED AND THE ENTIRE SURFACE OF THE REINFORCING SHALL BE COATED WITH AN EPOXY COATING, PAID FOR UNDER THE ITEM "CLEAN AND COAT EXPOSED REINFORCING STEEL".
3. COST OF ½" DEEP SAWCUT SHALL BE INCLUDED IN THE CONTRACT BID PRICE FOR ITEM "PARTIAL DEPTH PATCH".
4. PARTIAL DEPTH PATCH REPAIRS SHALL BE PERFORMED IN ACCORDANCE WITH DETAILS SHOWN ON THIS SHEET AND SHALL BE PAID UNDER THE ITEM "PARTIAL DEPTH PATCH" (SEE SPECIAL PROVISIONS).
5. IN AREAS WHERE REINFORCING STEEL IS ONLY PARTIALLY EXPOSED AFTER REMOVAL OF DETERIORATED CONCRETE, THE REINFORCEMENT SHALL BE COATED WITH EPOXY RESIN COMPOUND (SEE SPECIAL PROVISIONS) BEFORE PLACING "PARTIAL DEPTH PATCH" MATERIAL.
6. DECK PATCHING WORK ON THE TOP SURFACE SHALL BE PERFORMED IN ACCORDANCE WITH THE SPECIAL PROVISIONS "MAINTENANCE AND PROTECTION OF TRAFFIC" AND "PROSECUTION AND PROGRESS".

NOTE:

FINAL PAVING SHALL NOT BE PERFORMED UNTIL DECK REPAIRS HAVE BEEN COMPLETED (TOP AND BOTTOM SURFACE) WITHIN A SINGLE STAGE. SEE TRAFFIC SUBSET FOR STAGE CONSTRUCTION.

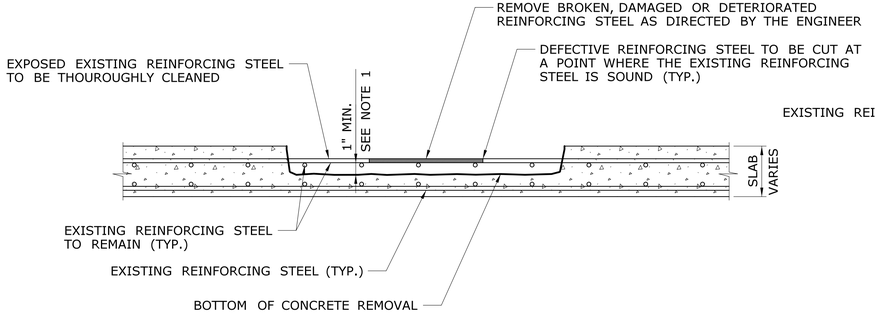

REMOVAL OF DEFECTIVE REINFORCING STEEL

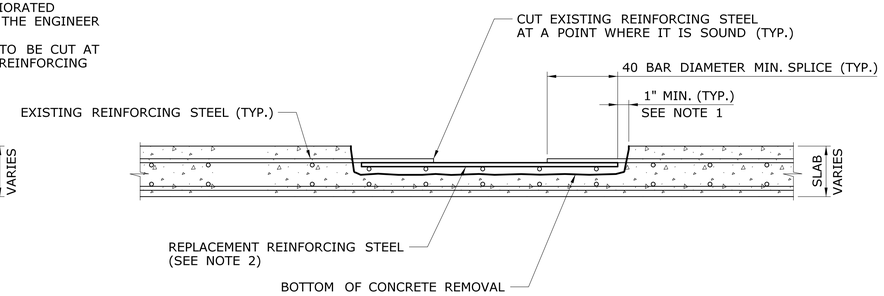

REPAIR OF DEFECTIVE REINFORCING STEEL

DEFECTIVE REINFORCING STEEL REPAIR NOTES:

1. COST OF ADDITIONAL CONCRETE REMOVAL REQUIRED FOR THE REPAIR OF THE REINFORCING STEEL SHALL BE PAID UNDER THE ITEM "PARTIAL DEPTH PATCH".
2. NEW REINFORCING STEEL SHALL BE EPOXY COATED ASTM A615 GRADE 60. FURNISHING AND INSTALLING REINFORCING BARS SHALL BE PAID UNDER THE ITEM "DEFORMED STEEL BARS - EPOXY COATED".

DEFECTIVE REINFORCING STEEL REPAIR DETAIL FOR PARTIAL DEPTH PATCH

N.T.S.

REFERENCES:

SEE DWG. NOS. S-59, S-61, S-63, S-65, S-66 AND S-69 FOR DECK REPAIR LOCATIONS.

REV.	DATE	REVISION DESCRIPTION	SHEET NO.

THE INFORMATION, INCLUDING ESTIMATED QUANTITIES OF WORK, SHOWN ON THESE SHEETS IS BASED ON LIMITED INVESTIGATIONS BY THE STATE AND IS IN NO WAY WARRANTED TO INDICATE THE CONDITIONS OF ACTUAL QUANTITIES OF WORK WHICH WILL BE REQUIRED.

Plotted Date: 9/25/2018

DESIGNER/DRAFTER: B.A./S.C.
CHECKED BY: J.H.M. II
SCALE AS NOTED

STATE OF CONNECTICUT
DEPARTMENT OF TRANSPORTATION

Filename: ...\SB_MSH_173_462_BR02295_S-68_DECK_REPAIRS-2.dgn

SIGNATURE/BLOCK:
Close, Jensen and Miller, P.C.
1137 Silas Deane Highway
Wethersfield, CT 06109

PROJECT TITLE:
REHABILITATION OF BRIDGE NO. 02295, ROUTE 136 OVER NORWALK RIVER

TOWN: NORWALK

DRAWING TITLE: DECK REHABILITATION PATCH DETAILS - 2

PROJECT NO. 173-462
DRAWING NO. S-68
SHEET NO. 03.68

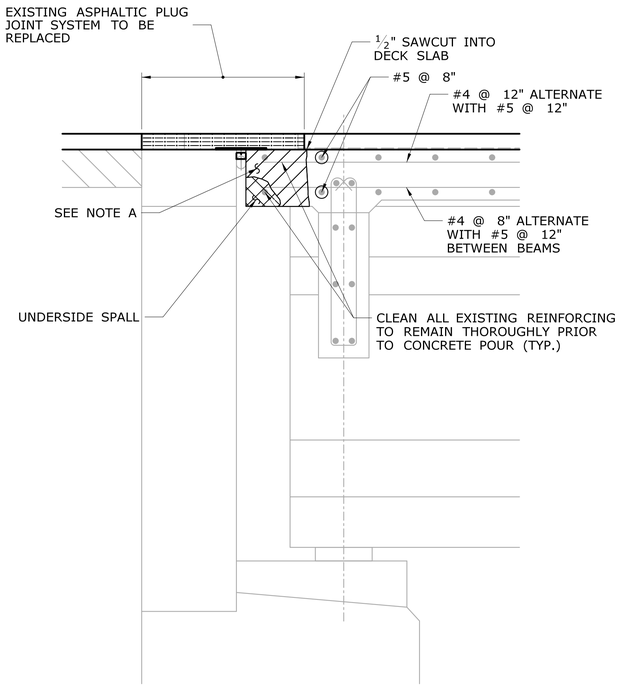

DECK END REPAIR AT ABUTMENTS

SCALE: 1" = 1'-0"

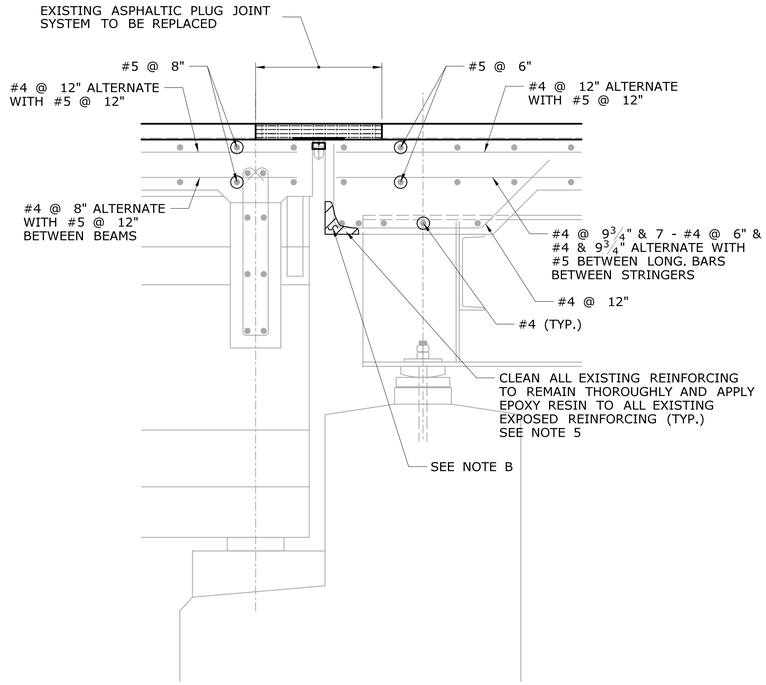

DECK END REPAIR AT PIER NOS. 1 AND 2

SCALE: 1" = 1'-0"

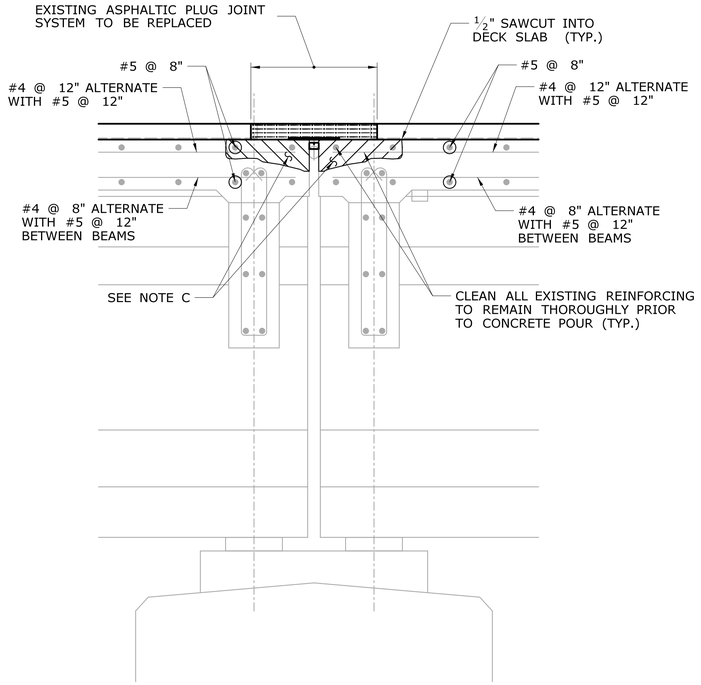

DECK END REPAIR AT PIER N0. 3

SCALE: 1" = 1'-0"

NOTE A:

REMOVE DETERIORATED DECK END CONCRETE INCLUDING UNDERSIDE SPALL TO SOUND CONCRETE (TYP.) IF NECESSARY, EXTEND DEMOLITION LIMITS 1" BEYOND TRANSVERSE BARS. PERFORM REPAIR IN ACCORDANCE WITH SPECIAL PROVISION "FULL DEPTH PATCH (HIGH EARLY STRENGTH CONCRETE)".

NOTE B:

REMOVE DETERIORATED DECK END CONCRETE TO SOUND CONCRETE (TYP.)
IF NECESSARY, EXTEND DEMOLITION LIMITS 1" BEYOND TRANSVERSE BARS. PERFORM REPAIR IN ACCORDANCE WITH SPECIAL PROVISION "CLEAN AND COAT EXPOSED REINFORCING STEEL".

NOTE C:

REMOVE DETERIORATED DECK END CONCRETE TO SOUND CONCRETE (TYP.)
IF NECESSARY, EXTEND DEMOLITION LIMITS 1" BEYOND TRANSVERSE BARS. PERFORM REPAIR IN ACCORDANCE WITH SPECIAL PROVISION "PARTIAL DEPTH PATCH".

DECK UNDERSIDE REPAIR NOTES:

1. REMOVE DETERIORATED CONCRETE TO SOUND CONCRETE.
2. IF REINFORCING STEEL IS EXPOSED, THEN CLEAN BY MECHANICAL CLEANING METHODS. WHERE ACTIVE CORROSION HAS OCCURRED THAT WOULD INHIBIT BONDING, SANDBLAST STEEL TO WHITE MATERIAL FINISH.
3. CLEAN THE SOUND CONCRETE SURFACE AREA OF ALL DIRT, DUST, LOOSE PARTICLES OR OTHER BOND INHIBITING MATTER BY AN APPROVED METHOD.
4. AT LOCATIONS WHERE SPALLS OR DELAMINATED CONCRETE ON THE UNDERSIDE OF DECK ARE DEEPER THAN HALF THE SLAB THICKNESS, REMOVE THE SLAB CONCRETE FULL DEPTH AND REPAIR AS "FULL DEPTH PATCH (HIGH EARLY STRENGTH CONCRETE)" (SEE DWG. NO. S-67 AND SPECIAL PROVISIONS FOR PATCHING DETAIL AND PROCEDURE).
5. IF LESS THAN 50% OF THE DIAMETER OF ANY REINFORCING BAR IS EXPOSED OR IF THE BAR HAS LESS THAN 1 FOOT IN LENGTH WITH MORE THAN 50% OF ITS DIAMETER EXPOSED, THE BAR SHALL BE CLEANED IN ACCORDANCE WITH THE ITEM "CLEAN AND COAT EXPOSED REINFORCING STEEL".
6. IF ANY BAR IS EXPOSED GREATER THAN THE PARAMETERS STATED IN NOTE 5, OR IF THE BARS EXHIBIT GREATER THAN 25% LOSS OF DIAMETER SECTION, THE AREA SHALL BE REPAIRED IN ACCORDANCE WITH THE PROCEDURE FOR "FULL DEPTH PATCH (HIGH EARLY STRENGTH CONCRETE)".
7. PARTIAL DEPTH DECK PATCH SHALL BE PAID FOR UNDER THE ITEM "PARTIAL DEPTH PATCH", SEE DWG NO. S-68 AND SPECIAL PROVISIONS FOR PATCHING DETAILS AND PROCEDURE.
8. FOR ASPHALTIC PLUG EXPANSION JOINT SYSTEM DETAILS SEE DWG. NOS. S-74, S-75 AND S-76.
9. ALL WORK SHALL BE ABOVE THE EXISTING LOW CHORD ELEVATION.

REV.	DATE	REVISION DESCRIPTION	SHEET NO.

THE INFORMATION, INCLUDING ESTIMATED QUANTITIES OF WORK, SHOWN ON THESE SHEETS IS BASED ON LIMITED INVESTIGATIONS BY THE STATE AND IS IN NO WAY WARRANTED TO INDICATE THE CONDITIONS OF ACTUAL QUANTITIES OF WORK WHICH WILL BE REQUIRED.

Plotted Date: 9/25/2018

DESIGNER/DRAFTER: B.A./S.C.
CHECKED BY: J.H.M. II
SCALE AS NOTED

STATE OF CONNECTICUT
DEPARTMENT OF TRANSPORTATION

Filename: ...\SB_MSH_173_462_BR02295_S-69_DECK_REPAIRS-3.dgn

SIGNATURE/BLOCK:
Close, Jensen and Miller, P.C.
1137 Silas Deane Highway
Wethersfield, CT 06109

PROJECT TITLE:
REHABILITATION OF BRIDGE NO. 02295, ROUTE 136 OVER NORWALK RIVER

TOWN: NORWALK

DRAWING TITLE: DECK REPAIR DETAILS - 1

PROJECT NO. 173-462
DRAWING NO. S-69
SHEET NO. 03.69

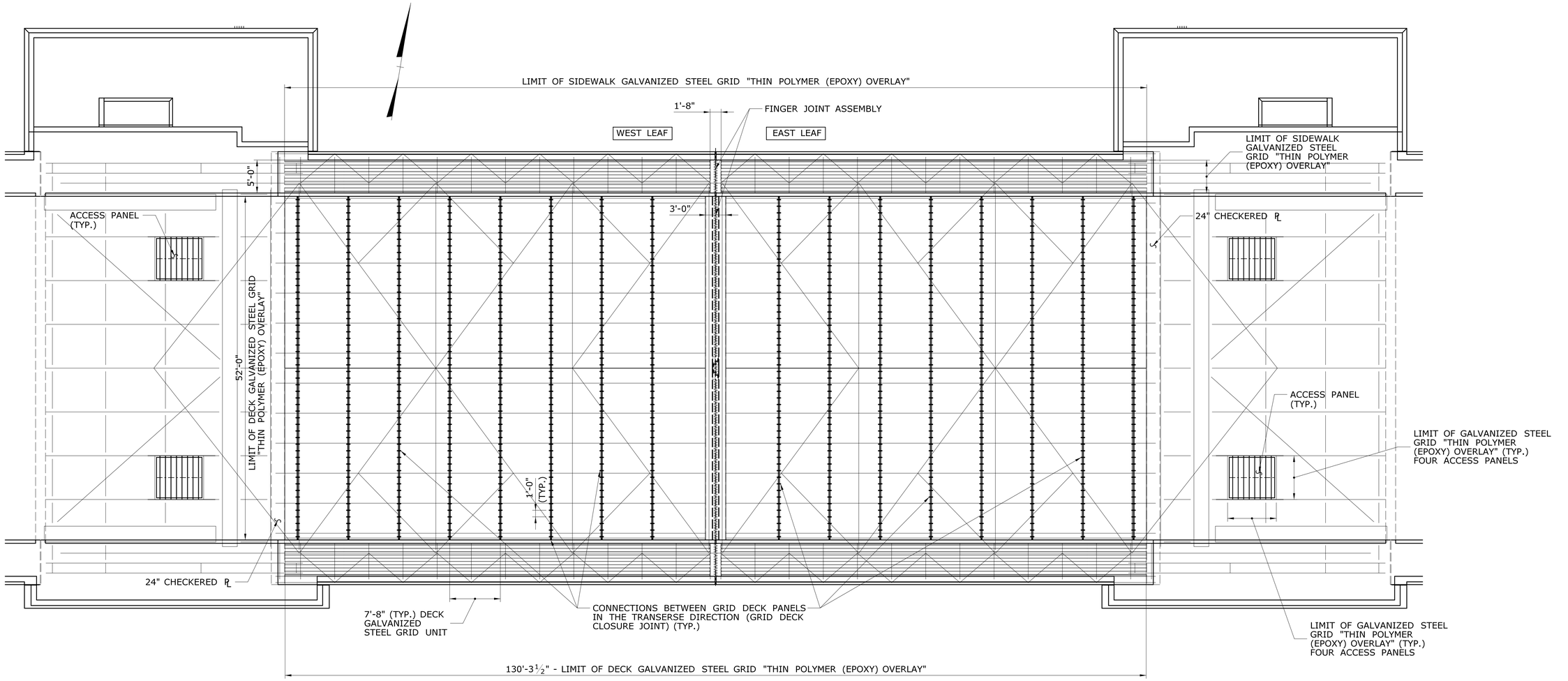

BASCULE SPAN PLAN - GRID DECK

NOTES:

1. FOR GRID DECK CLOSURE JOINT DETAILS, SEE DWG. S-71.
2. FOR DECK AND SIDEWALK GALVANIZED STEEL GRID THIN POLYMER (EPOXY) OVERLAY DETAILS, SEE DWG. S-72.
3. FOR ACCESS PANEL GALVANIZED STEEL GRID THIN POLYMER (EPOXY) OVERLAY DETAILS, SEE DWG. S-73.
4. FOR FINGER JOINT ASSEMBLY, SEE DWG. S-72.

REV.	DATE	REVISION DESCRIPTION	SHEET NO.

THE INFORMATION, INCLUDING ESTIMATED QUANTITIES OF WORK, SHOWN ON THESE SHEETS IS BASED ON LIMITED INVESTIGATIONS BY THE STATE AND IS IN NO WAY WARRANTED TO INDICATE THE CONDITIONS OF ACTUAL QUANTITIES OF WORK WHICH WILL BE REQUIRED.

Plotted Date: 9/25/2018

DESIGNER/DRAFTER: **B.A./S.C.**
CHECKED BY: **J.H.M. II**
SCALE: 1/8" = 1'-0"

STATE OF CONNECTICUT
DEPARTMENT OF TRANSPORTATION

Filename: ...\SB_MSH_173_462_BR02295_S-70_BASCULE DECK_GRID.dgn

SIGNATURE/BLOCK:
Close, Jensen and Miller, P.C.
1137 Silas Deane Highway
Wethersfield, CT 06109

PROJECT TITLE:
REHABILITATION OF BRIDGE NO. 02295, ROUTE 136 OVER NORWALK RIVER

TOWN: **NORWALK**

DRAWING TITLE: **BASCULE GRID DECK SPAN P-1**

PROJECT NO. **173-462**
DRAWING NO. **S-70**
SHEET NO. **03.70**

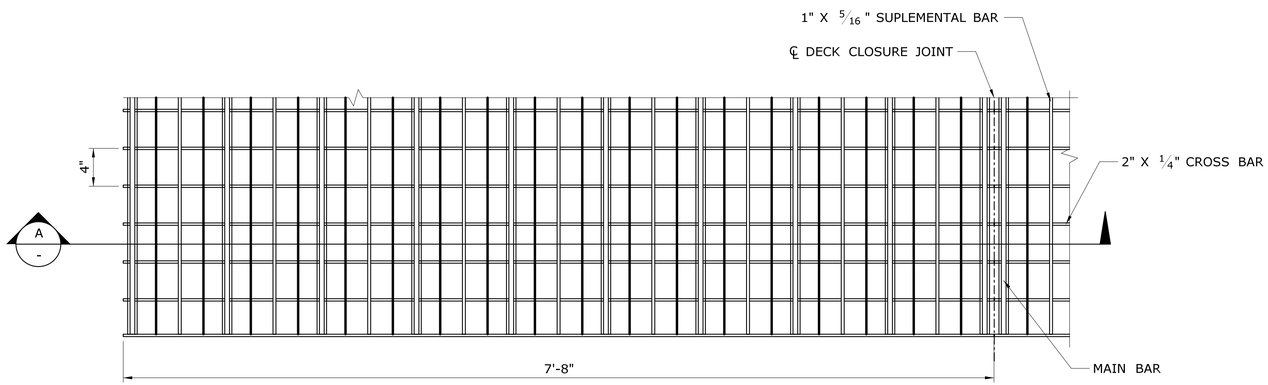

PARTIAL PLAN GRID DECK ROADWAY

SCALE: 1½" = 1'-0"

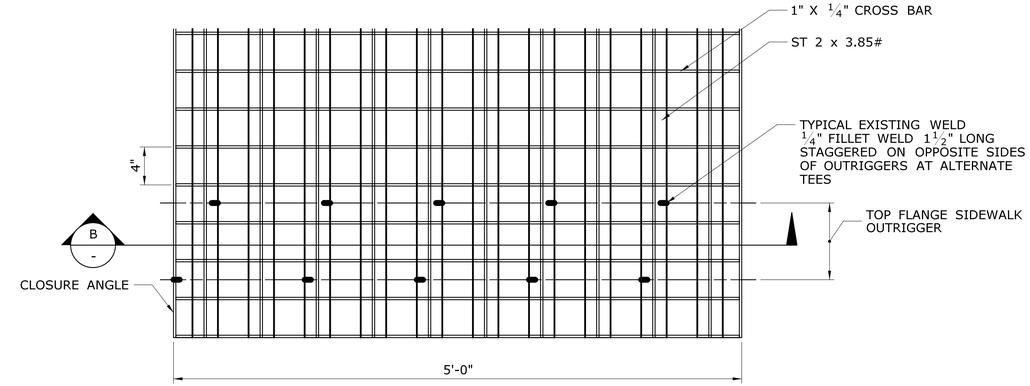

PARTIAL PLAN GRID DECK SIDEWALK

SCALE: 1½" = 1'-0"

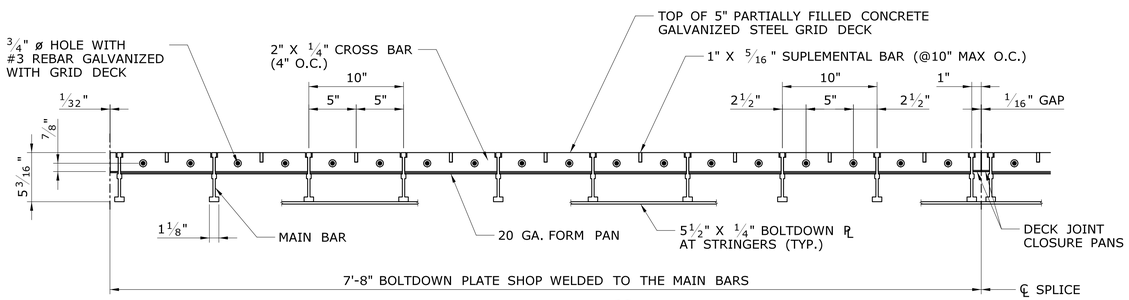

SECTION A

SCALE: 1½" = 1'-0"

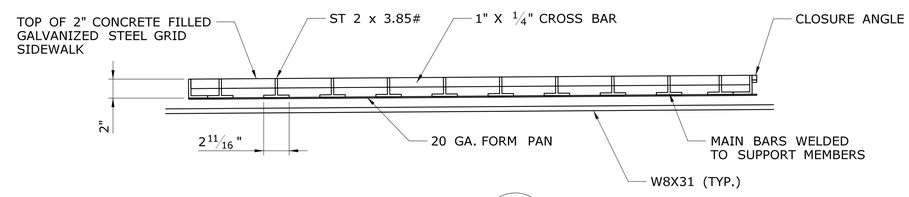

SECTION B

SCALE: 1½" = 1'-0"

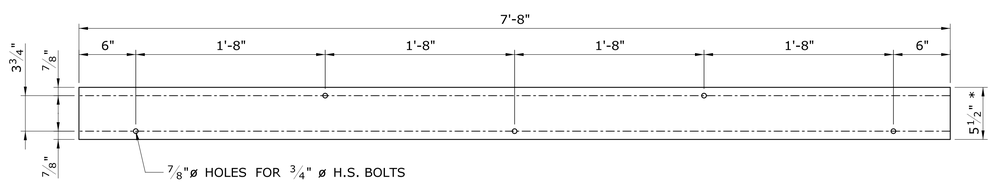

* BOLTDOWN PLATE AT ENDS OF GRID DECK OVER CLOSURE JOINTS IS 2¾" WIDE

BOLTDOWN PLATE DETAIL

SCALE: 1½" = 1'-0"

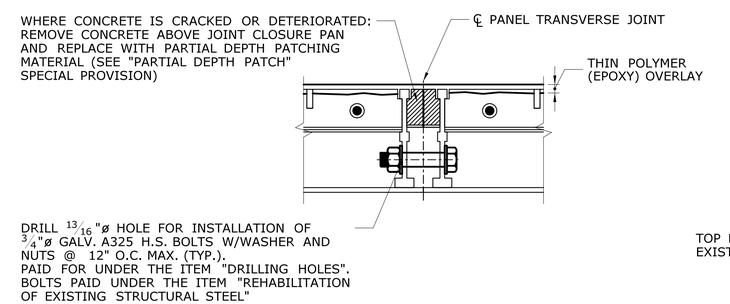

PROPOSED DECK CLOSURE JOINT DETAIL

SCALE: 3" = 1'-0"

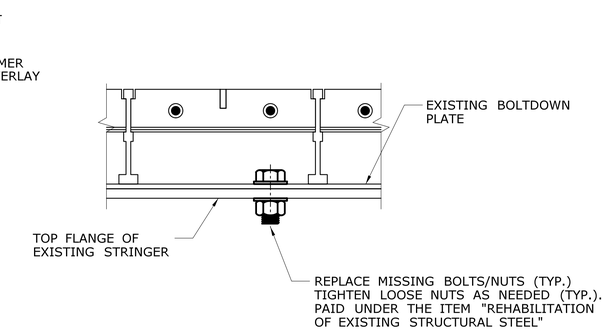

MISSING BOLTS DETAIL

SCALE: 3" = 1'-0"

NOTE:

EXISTING 2" STEEL SIDEWALK AND 5" STEEL ROADWAY GRATING CONFORM TO ASTM A-709, GRADE 50 (ALL STEEL IS GALVANIZED).

NOTE:

REMOVE CONCRETE ABOVE EXISTING JOINT CLOSURE PAN BY MEANS OF HYDRO-DEMOLITION. NO MECHANICAL TOOLS SHALL BE USED FOR CONCRETE REMOVAL IN THE GRID DECKING. CARE SHALL BE TAKEN NOT TO DAMAGE EXISTING FORM PAN TO REMAIN DURING THE REMOVAL OPERATION. ALL SURFACES OF EXISTING GRID SYSTEM INTEGRATED INTO NEW WORK SHALL BE THROUGHLY CLEANED PRIOR TO PLACEMENT OF NEW CONCRETE.

REV.	DATE	REVISION DESCRIPTION	SHEET NO.

THE INFORMATION, INCLUDING ESTIMATED QUANTITIES OF WORK, SHOWN ON THESE SHEETS IS BASED ON LIMITED INVESTIGATIONS BY THE STATE AND IS IN NO WAY WARRANTED TO INDICATE THE CONDITIONS OF ACTUAL QUANTITIES OF WORK WHICH WILL BE REQUIRED.

Plotted Date: 9/25/2018

DESIGNER/DRAFTER: B.A./S.C.
CHECKED BY: J.H.M. II
SCALE AS NOTED

STATE OF CONNECTICUT
DEPARTMENT OF TRANSPORTATION

Filename: ...\SB_MSH_173_462_BR02295_S-71_GRID_DET-1.dgn

SIGNATURE/BLOCK:
Close, Jensen and Miller, P.C.
1137 Silas Deane Highway
Wethersfield, CT 06109

PROJECT TITLE:
REHABILITATION OF BRIDGE
NO. 02295, ROUTE 136
OVER NORWALK RIVER

TOWN: NORWALK

DRAWING TITLE: GRID DECK REPAIR DETAILS - 1

PROJECT NO. 173-462
DRAWING NO. S-71
SHEET NO. 03.71

NOTES:

1. CONCRETE PATCHES MUST BE COMPLETELY CURED PRIOR TO PLACEMENT OF THE EPOXY OVERLAY. AFTER DECK REPAIRS ARE COMPLETED, CURED AND PRIOR TO PLACEMENT OF THE OVERLAY, THE CONTRACTOR SHALL SHOT BLAST THE ENTIRE DECK SURFACE TO REMOVE ASPHALTIC MATERIALS, OIL GREASE, DIRT,SEALERS, RUST, LAITANCE, CURING COMPOUNDS, PAINT AND WEAK CONCRETE MATERIALS THAT WOULD INHIBIT SUCCESSFUL BONDING OF THE EPOXY OVERLAY TO THE WEARING SURFACE. THIS WORK SHALL BE PAID UNDER ITEM "THIN POLYMER (EPOXY) OVERLAY".
2. REMOVE EXISTING DETERIORATED CONCRETE TO TOP OF EXISTING FORM PAN BY MEANS OF HYDRO-DEMOLITION. NO MECHANICAL TOOLS SHALL BE USED FOR CONCRETE REMOVAL IN THE GRID DECKING. CARE SHALL BE TAKEN NOT TO DAMAGE EXISTING FORM PAN TO REMAIN DURING THE REMOVAL OPERATION. ALL SURFACES OF EXISTING GRID SYSTEM INTEGRATED INTO NEW WORK SHALL BE THROUGHLY CLEANED PRIOR TO PLACEMENT OF NEW CONCRETE. ALL PATCH WORK ON THE PARTIAL FILL GRID DECK TO BE PAID UNDER ITEM "PARTIAL DEPTH PATCH".
3. ALL WORK RELATED TO CUTTING AND REMOVAL OF EXISTING RUSTED AND LOOSE FORM PAN UNDER GRID DECK SHALL BE PAID FOR UNDER THE ITEM "PARTIAL DEPTH PATCH".

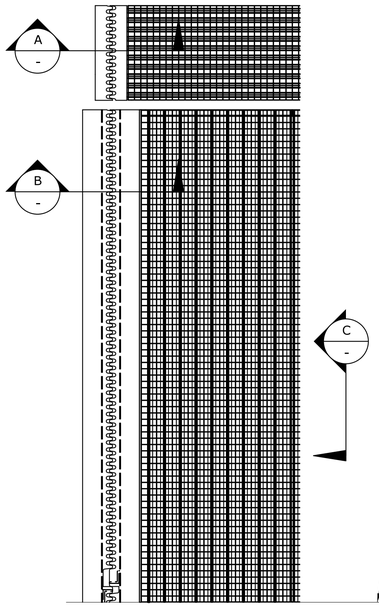

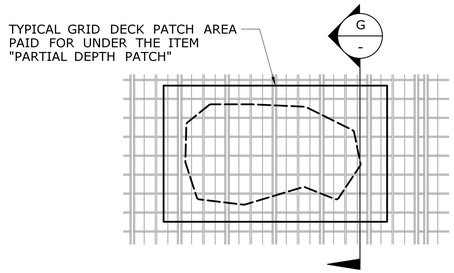

PLAN
SCALE: $\frac{3}{4}$" = 1'-0"

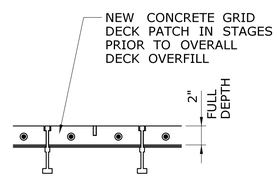

SECTION G
SCALE: $1\frac{1}{2}$" = 1'-0"

GRID DECK PATCH REPAIR

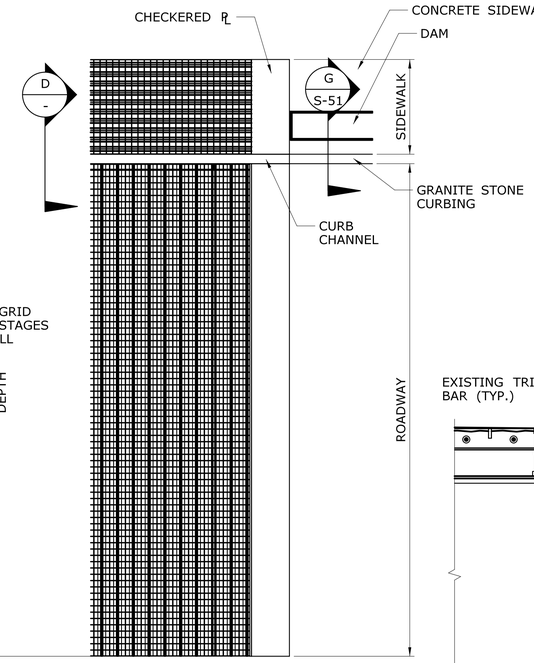

PARTIAL PLAN
SCALE: $\frac{1}{4}$" = 1'-0"

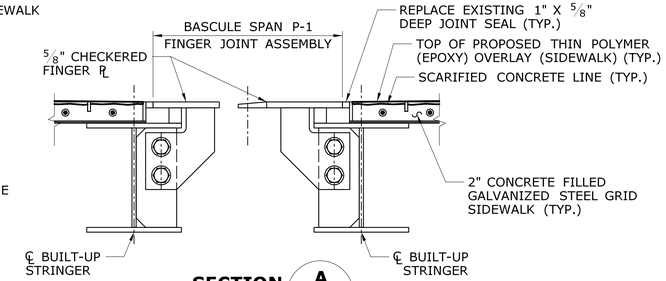

SECTION A
SCALE: $1\frac{1}{2}$" = 1'-0"

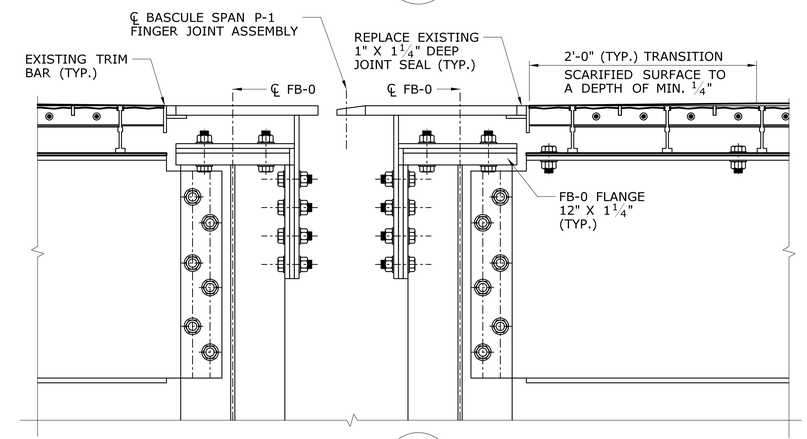

SECTION B
SCALE: $1\frac{1}{2}$" = 1'-0"

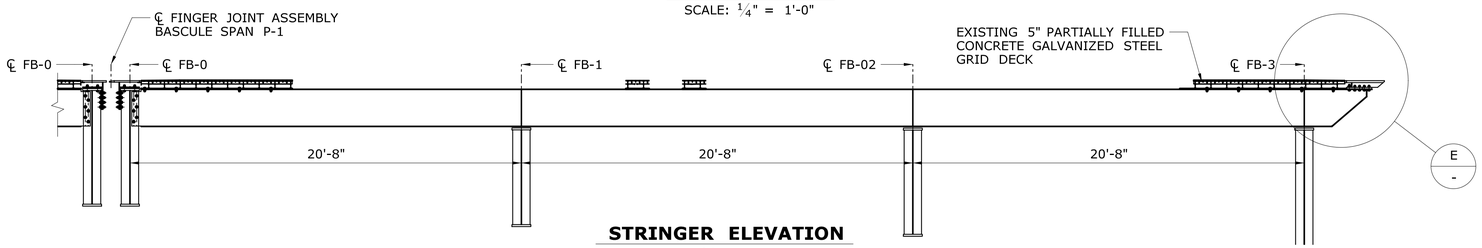

STRINGER ELEVATION
SCALE: $\frac{1}{4}$" = 1'-0"

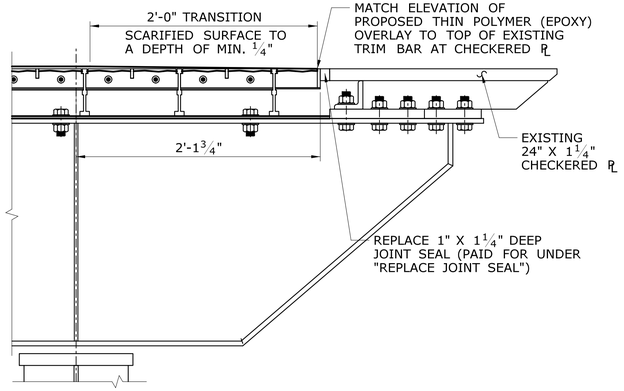

DETAIL E
SCALE: $1\frac{1}{2}$" = 1'-0"

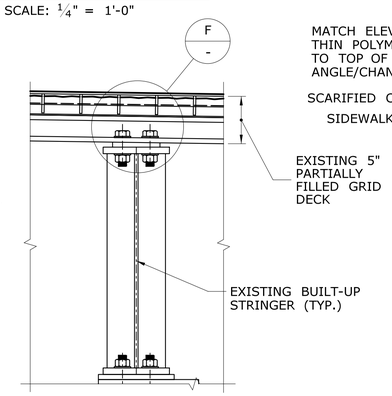

SECTION C
SCALE: $1\frac{1}{2}$" = 1'-0"

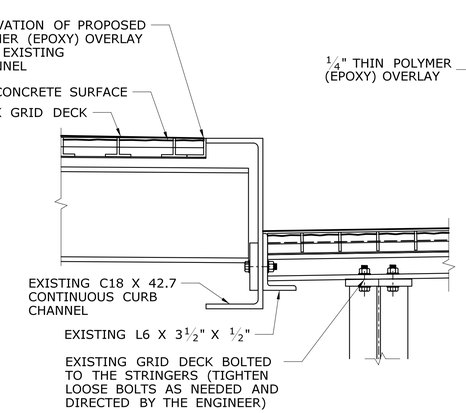

SECTION D
SCALE: $1\frac{1}{2}$" = 1'-0"

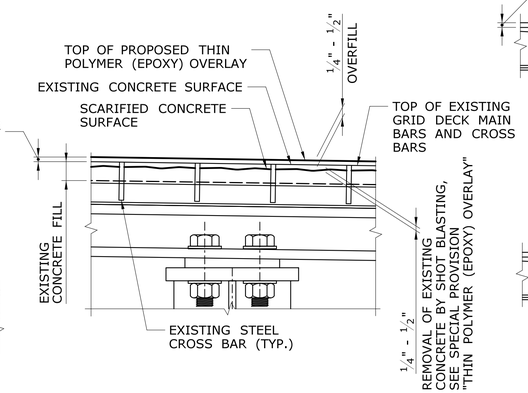

DETAIL F
SCALE: 3" = 1'-0"

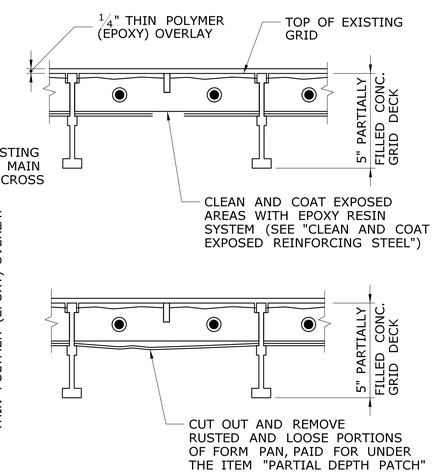

DAMAGED PAN REPAIR
SCALE: 3" = 1'-0"

REV.	DATE	REVISION DESCRIPTION	SHEET NO.

THE INFORMATION, INCLUDING ESTIMATED QUANTITIES OF WORK, SHOWN ON THESE SHEETS IS BASED ON LIMITED INVESTIGATIONS BY THE STATE AND IS IN NO WAY WARRANTED TO INDICATE THE CONDITIONS OF ACTUAL QUANTITIES OF WORK WHICH WILL BE REQUIRED.

Plotted Date: 9/25/2018

DESIGNER/DRAFTER: B.A./S.C.
CHECKED BY: J.H.M. II
SCALE AS NOTED

STATE OF CONNECTICUT
DEPARTMENT OF TRANSPORTATION

Filename: ...\SB_MSH_173_462_BR02295_S-72_GRID_DET-2.dgn

SIGNATURE/BLOCK:
Close, Jensen and Miller, P.C.
1137 Silas Deane Highway
Wethersfield, CT 06109

PROJECT TITLE:
REHABILITATION OF BRIDGE NO. 02295, ROUTE 136 OVER NORWALK RIVER

TOWN: **NORWALK**

DRAWING TITLE: **GRID DECK REPAIR DETAILS - 2**

PROJECT NO. 173-462
DRAWING NO. S-72
SHEET NO. 03.72

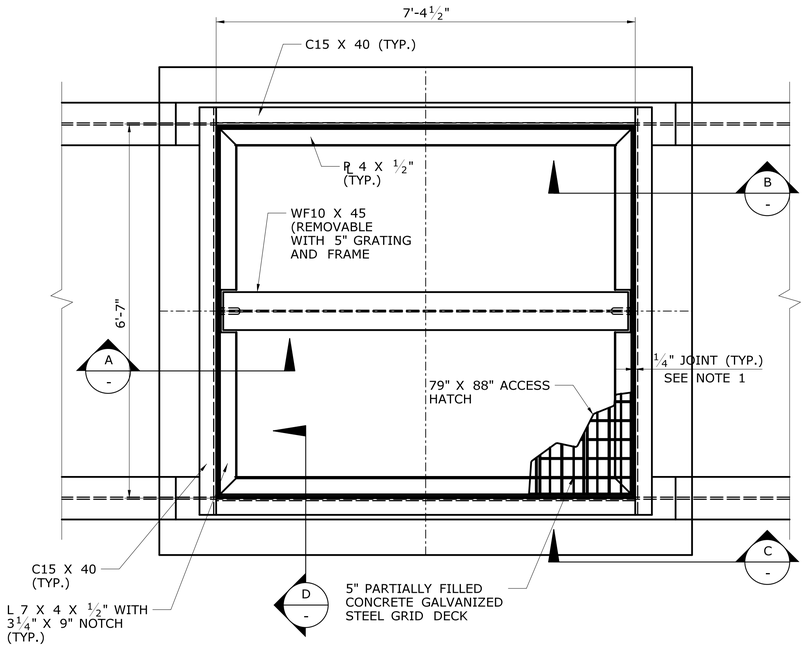

PLAN:
SCALE: ¾" = 1'-0"

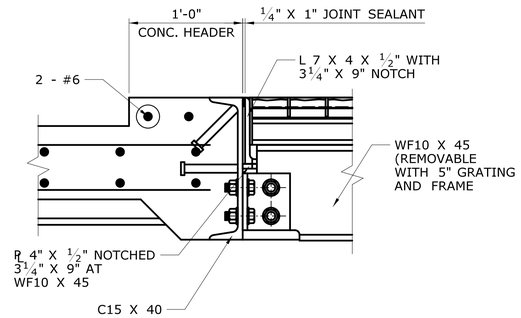

SECTION A
SCALE: 1½" = 1'-0"

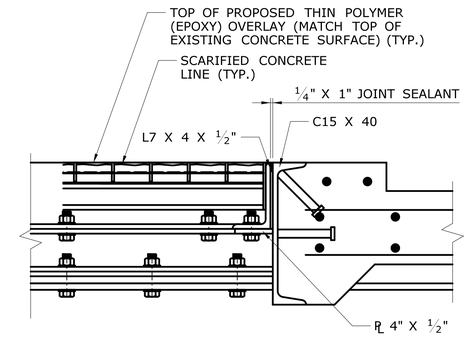

SECTION B
SCALE: 1½" = 1'-0"

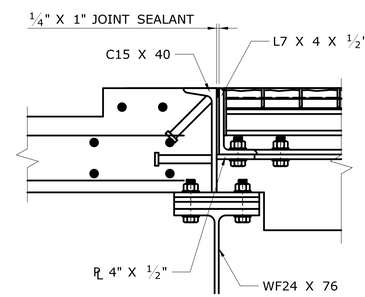

SECTION D
SCALE: 1½" = 1'-0"

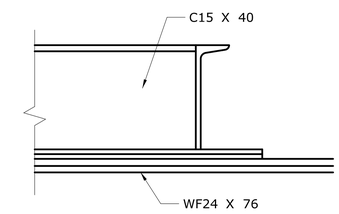

SECTION C
SCALE: 1½" = 1'-0"

NOTES:

1. RESEAL EXISTING JOINT WITH APPROVED JOINT SEALANT. TO BE PAID FOR UNDER THE ITEM "REPLACE JOINT SEAL".
2. FOR TOP OF DECK DEFICIENCY, SEE DWG. S-65.

ACCESS PANEL HATCH DETAILS

REV.	DATE	REVISION DESCRIPTION	SHEET NO.

THE INFORMATION, INCLUDING ESTIMATED QUANTITIES OF WORK, SHOWN ON THESE SHEETS IS BASED ON LIMITED INVESTIGATIONS BY THE STATE AND IS IN NO WAY WARRANTED TO INDICATE THE CONDITIONS OF ACTUAL QUANTITIES OF WORK WHICH WILL BE REQUIRED.

Plotted Date: 9/25/2018

DESIGNER/DRAFTER: B.A./S.C.
CHECKED BY: -
SCALE AS NOTED

STATE OF CONNECTICUT
DEPARTMENT OF TRANSPORTATION

Filename: ..\SB_MSH_173_462_BR02295_S-73_GRID_DET-3.dgn

SIGNATURE/ BLOCK:
Close, Jensen and Miller, P.C.
1137 Silas Deane Highway
Wethersfield, CT 06109

PROJECT TITLE:
REHABILITATION OF BRIDGE NO. 02295, ROUTE 136 OVER NORWALK RIVER

TOWN: **NORWALK**

DRAWING TITLE: **GRID DECK REPAIRS DETAILS - 3**

PROJECT NO. 173-462
DRAWING NO. S-73
SHEET NO. 03.73

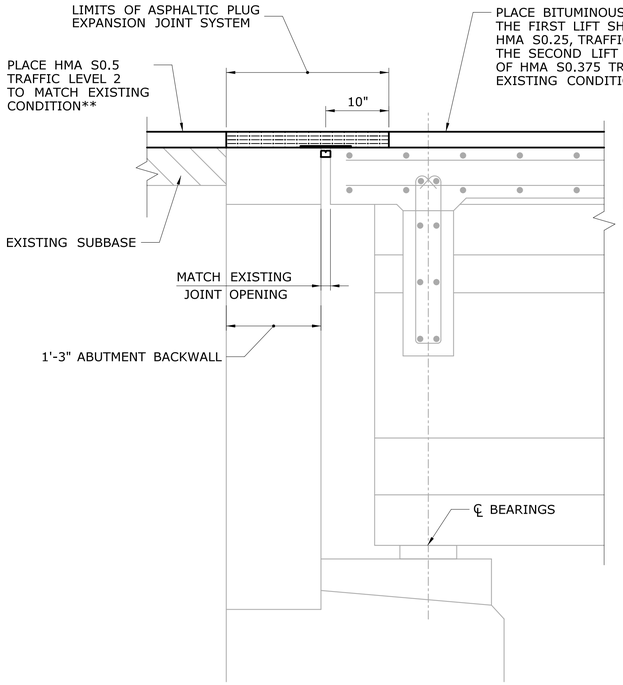

** AS NOTED ON THIS SHEET FOR "JOINT REPLACEMENT DETAILS" THE OVERLAY THICKNESS TO BE ADJUSTED TO MATCH ADJACENT PAVEMENT THICKNESS.

JOINT REPLACEMENT AT ABUTMENTS

SCALE: 1" = 1'-0"

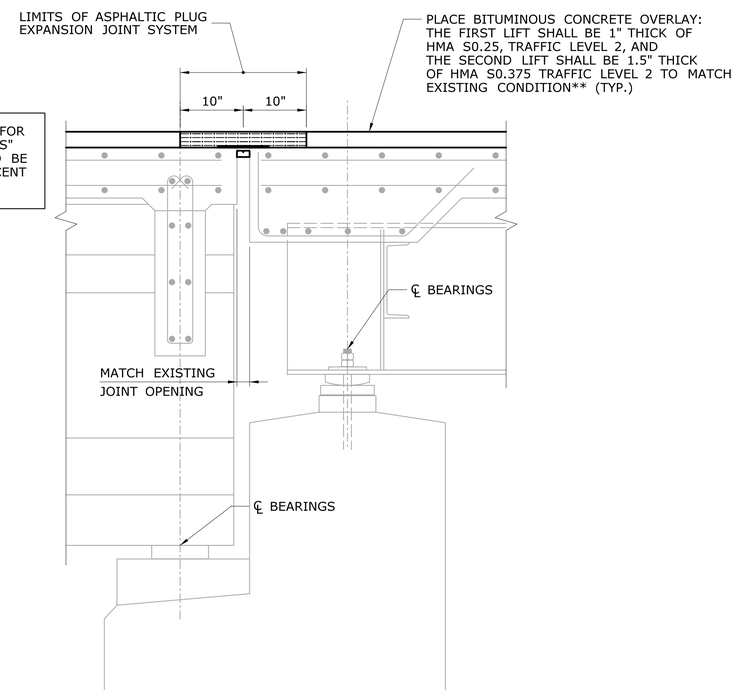

JOINT REPLACEMENT AT PIER NOS. 1 AND 2

SCALE: 1" = 1'-0"

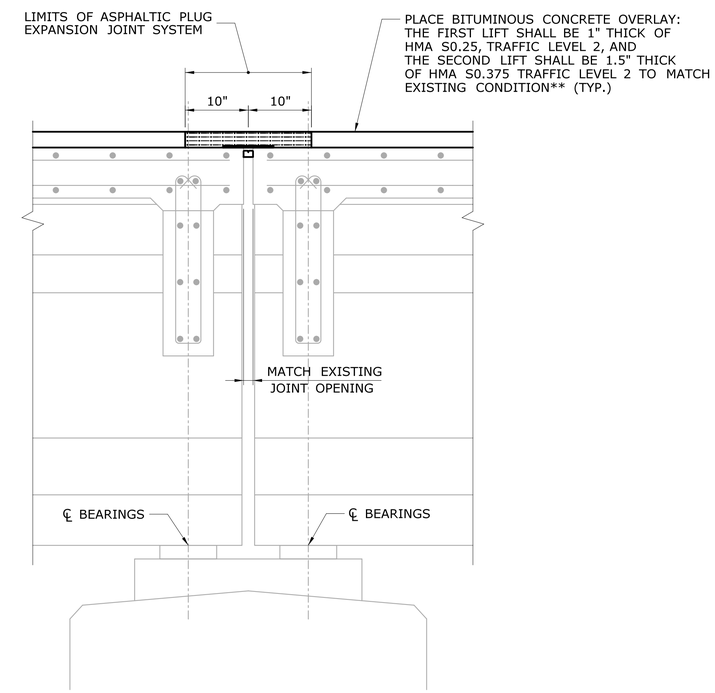

JOINT REPLACEMENT AT PIER N0. 3

SCALE: 1" = 1'-0"

ASPHALTIC PLUG EXPANSION JOINT	
	BR. 02295
ABUTMENT NO. 1	
EFFECTIVE SPAN LENGTH (FT)	95.0
THERMAL MOVEMENT RANGE (IN)	0.876
PIER NO. 1	
EFFECTIVE SPAN LENGTH (FT)	75.0
THERMAL MOVEMENT RANGE (IN)	0.691
PIER NO. 2	
EFFECTIVE SPAN LENGTH (FT)	75.0
THERMAL MOVEMENT RANGE (IN)	0.691
PIER NO. 3	
EFFECTIVE SPAN LENGTH (FT)	95.0
THERMAL MOVEMENT RANGE (IN)	0.876
ABUTMENT NO. 2	
EFFECTIVE SPAN LENGTH (FT)	95.0
THERMAL MOVEMENT RANGE (IN)	0.876

REFERENCE:

1. SEE DWG. NO. S-75 FOR ASPHALTIC PLUG EXPANSION JOINT DETAILS.
2. SEE DWG. NO. S-75 FOR PREFORMED JOINT SEAL NOTES AND DETAILS.

REV.	DATE	REVISION DESCRIPTION	SHEET NO.

THE INFORMATION, INCLUDING ESTIMATED QUANTITIES OF WORK, SHOWN ON THESE SHEETS IS BASED ON LIMITED INVESTIGATIONS BY THE STATE AND IS IN NO WAY WARRANTED TO INDICATE THE CONDITIONS OF ACTUAL QUANTITIES OF WORK WHICH WILL BE REQUIRED.

Plotted Date: 9/25/2018

DESIGNER/DRAFTER: B.A./S.C.
CHECKED BY: J.H.M. II
SCALE AS NOTED

STATE OF CONNECTICUT
DEPARTMENT OF TRANSPORTATION

Filename: ...\SB_MSH_173_462_BR02295_S-74_JOINT-1.dgn

SIGNATURE/ BLOCK:
Close, Jensen and Miller, P.C.
1137 Silas Deane Highway
Wethersfield, CT 06109

PROJECT TITLE:
REHABILITATION OF BRIDGE NO. 02295, ROUTE 136 OVER NORWALK RIVER

TOWN: NORWALK

DRAWING TITLE:
JOINT REPAIR DETAILS - 1

PROJECT NO. 173-462
DRAWING NO. S-74
SHEET NO. 03.74

NOTES:

PARAPETS AND WALLS SHALL BE SEALED FOR THE ENTIRE VERTICAL PORTION AND ACROSS THE TOP WITH THE SEALING ELEMENT - BENDS AND SPLICES 9" BELOW THE CURBLINE AND THE TRANSITION INTO THE DECK SHALL BE FACTORY FABRICATED. ROADWAY SPLICES AS WELL AS BENDS AND SPLICES 9" ABOVE THE CURBLINE AND HIGHER ARE ALLOWED TO BE FIELD FABRICATED.

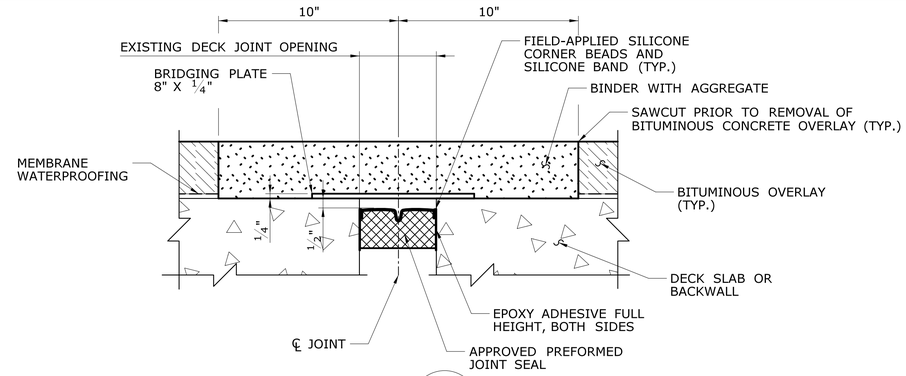

SECTION A
SCALE: 3" = 1'-0"

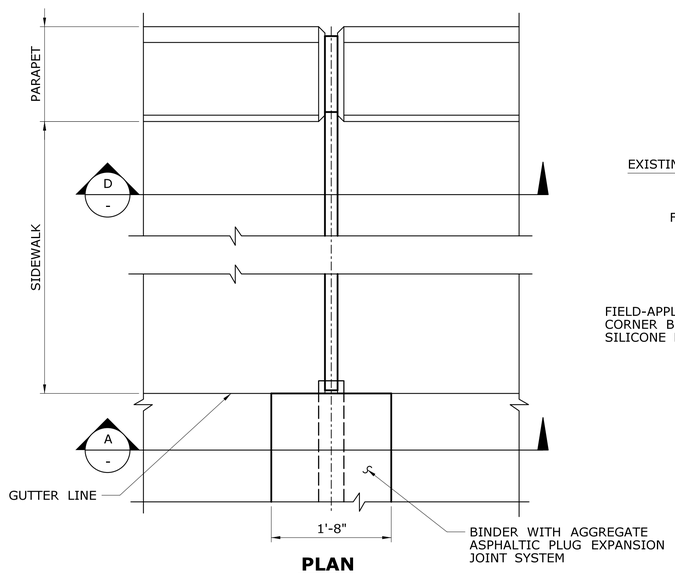

PLAN

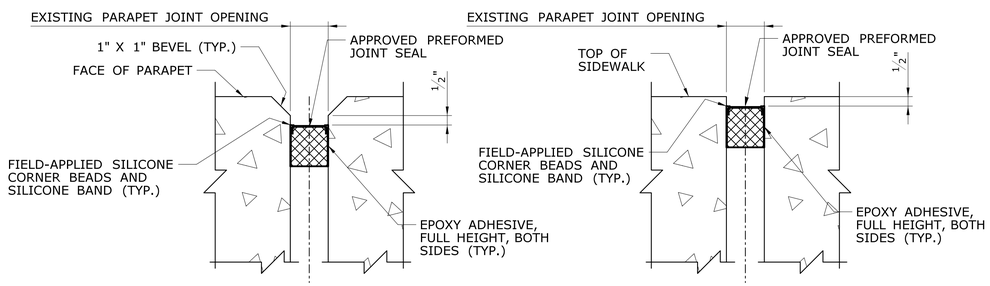

SECTION B
SCALE: 3" = 1'-0"

SECTION D
SCALE: 3" = 1'-0"

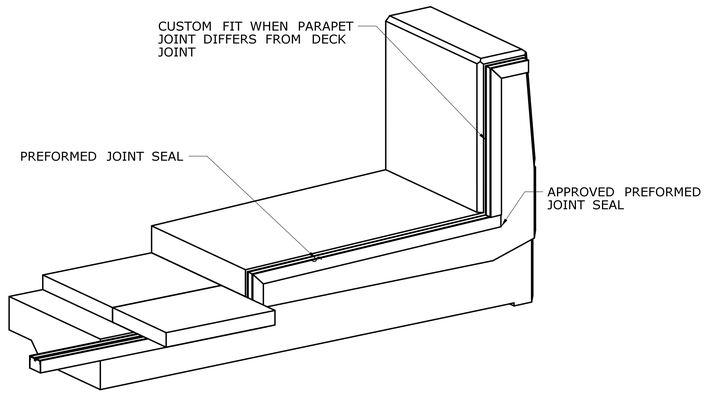

ISOMETRIC VIEW

NOTES:

1. REMOVE EXISTING HMA OVERLAY, MEMBRANE WATERPROOFING AND EXISTING JOINT COMPONENTS. REPLACE WITH ASPHALTIC PLUG EXPANSION JOINT SYSTEM. TO BE PAID FOR UNDER THE ITEM "ASPHALTIC PLUG EXPANSION JOINT SYSTEM".
2. ASPHALTIC PLUG EXPANSION JOINT SYSTEMS MAY BE INSTALLED ONLY WITHIN THE TEMPERATURE RANGE SPECIFIED IN THE SPECIAL PROVISION "ASPHALTIC PLUG EXPANSION JOINT SYSTEM".
3. ASPHALTIC PLUG JOINTS SHALL BE REPLACED FROM GUTTER LINE TO GUTTER LINE.
4. SEE DRAWING S-74 FOR THE RANGE OF THERMAL MOVEMENT.
5. THE CONTRACTOR IS RESPONSIBLE FOR MEASURING THE JOINT GAP WIDTHS IN BOTH THE BRIDGE DECKS AND THE PARAPETS, IN ACCORDANCE WITH THE "PREFORMED JOINT SEAL" SPECIFICATIONS. THE MEASUREMENTS SHALL ALSO INCLUDE THE MINIMUM AND MAXIMUM BRIDGE DECK JOINT WIDTH ALONG THE JOINT TO DETERMINE THE APPROXIMATE SIZE JOINT SEAL. THE CONTRACTOR SHALL SELECT A PROPERLY-SIZED JOINT BASED ON THE MEASUREMENTS AND THERMAL MOVEMENT RANGE. HE SHALL SUBMIT THIS WITH CATALOGUE CUTS AND A "QUALITY CONTROL PLAN" TO THE DESIGN ENGINEER FOR REVIEW. THE DESIGN ENGINEER SHALL RECEIVE THE JOINT GAP WIDTH MEASUREMENT AND "QUALITY CONTROL PLAN" AT LEAST 30 DAYS PRIOR TO START OF WORK.
6. PRIOR TO INSTALLING THE SILICONE SEALANT CLEAN JOINT SIDES. SEE SPECIAL PROVISION FOR ADDITIONAL REQUIREMENTS INVOLVING THE "PREFORMED JOINT SEAL" CONSTRUCTION.
7. JOINT SEAL AND INSTALLATION PAID FOR AS "PREFORMED JOINT SEAL".
8. ANY UTILITIES BELOW THE DECK AND CONDUITS IN PARAPETS SHALL BE PROTECTED.

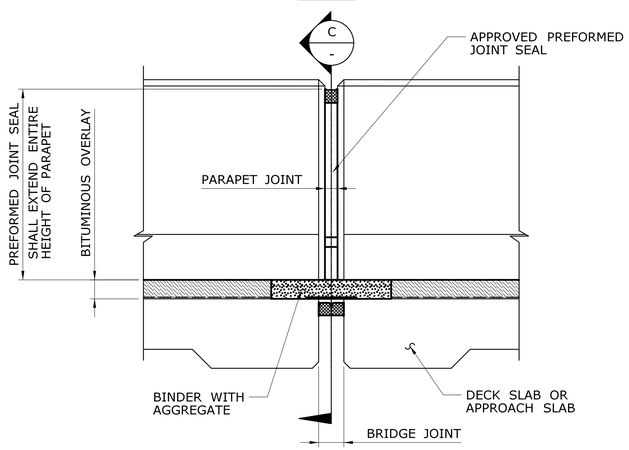

ELEVATION

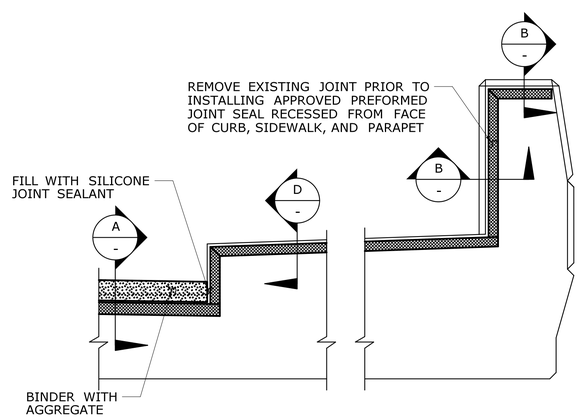

SECTION C

JOINT TREATMENT AT EXPANSION JOINTS

SCALE: 1" = 1'-0"

REV.	DATE	REVISION DESCRIPTION	SHEET NO.

THE INFORMATION, INCLUDING ESTIMATED QUANTITIES OF WORK, SHOWN ON THESE SHEETS IS BASED ON LIMITED INVESTIGATIONS BY THE STATE AND IS IN NO WAY WARRANTED TO INDICATE THE CONDITIONS OF ACTUAL QUANTITIES OF WORK WHICH WILL BE REQUIRED.

Plotted Date: 9/25/2018

DESIGNER/DRAFTER: B.A./S.C.
CHECKED BY: J.H.M. II
SCALE AS NOTED

STATE OF CONNECTICUT
DEPARTMENT OF TRANSPORTATION

Filename: ...\SB_MSH_173_462_BR02295_S-75_JOINT-2.dgn

SIGNATURE/BLOCK:
Close, Jensen and Miller, P.C.
1137 Silas Deane Highway
Wethersfield, CT 06109

PROJECT TITLE:
REHABILITATION OF BRIDGE NO. 02295, ROUTE 136 OVER NORWALK RIVER

TOWN: **NORWALK**

DRAWING TITLE: **JOINT REPAIR DETAILS - 2**

PROJECT NO. 173-462
DRAWING NO. S-75
SHEET NO. 03.75

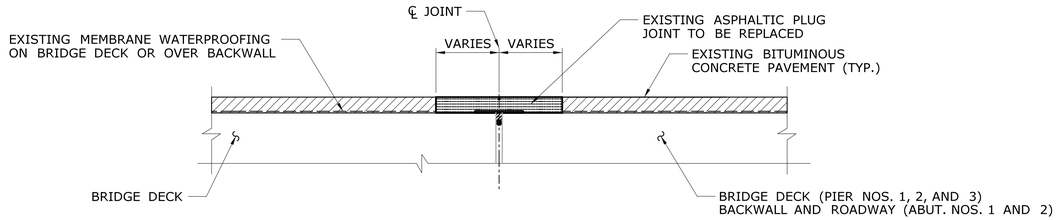

EXISTING CONDITIONS

SCALE: 1" = 1'-0"

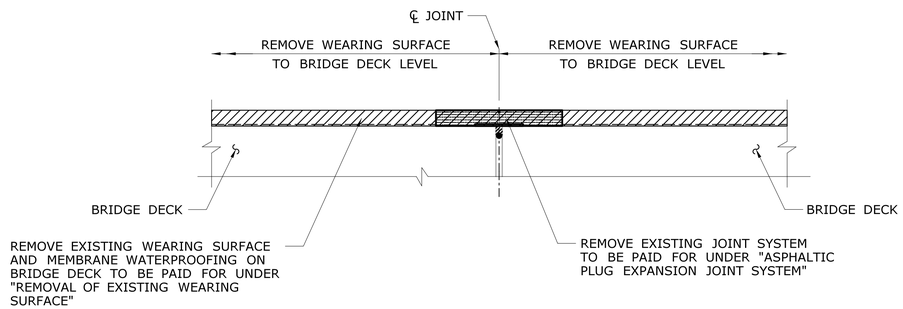

STEP 1 (PIER NOS. 1, 2, AND 3)

SCALE: 1" = 1'-0"

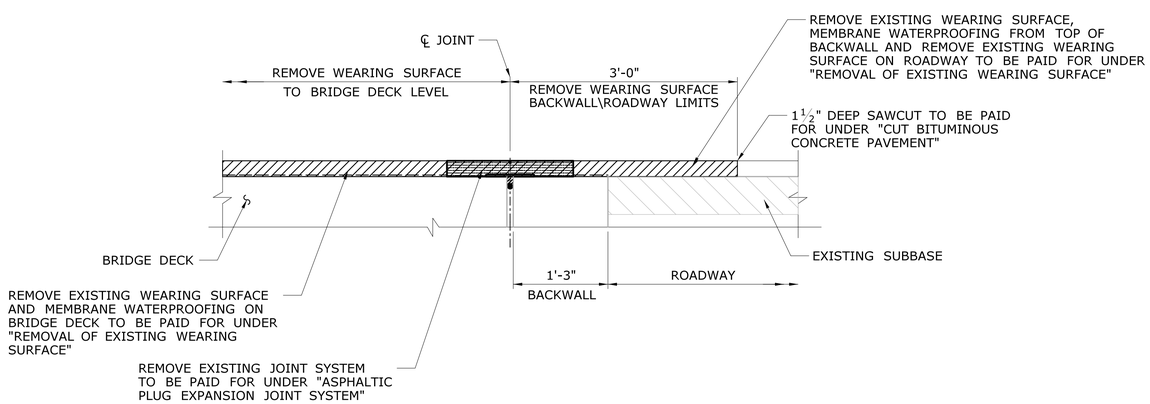

STEP 1 (ABUT. NOS. 1 AND 2)

SCALE: 1" = 1'-0"

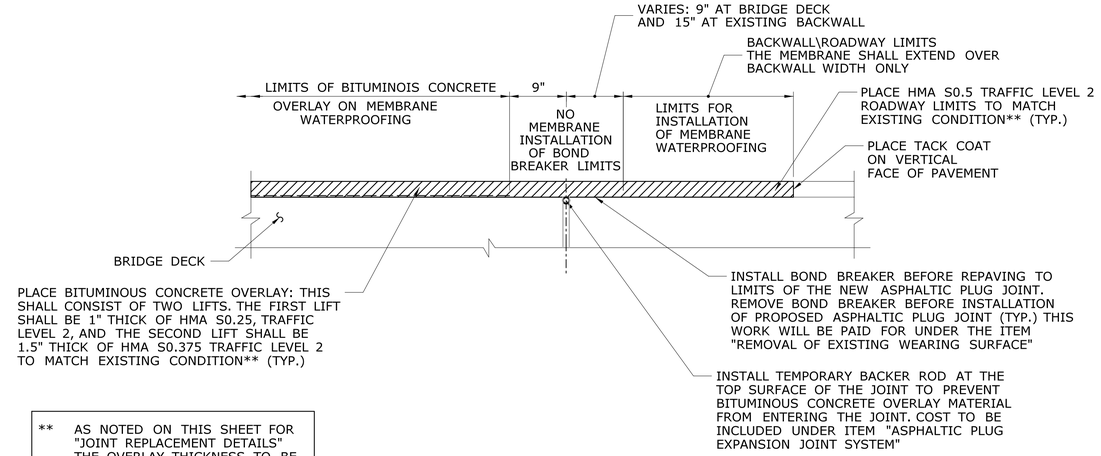

** AS NOTED ON THIS SHEET FOR "JOINT REPLACEMENT DETAILS" THE OVERLAY THICKNESS TO BE ADJUSTED TO MATCH ADJACENT PAVEMENT THICKNESS.

STEP 2

SCALE: 1" = 1'-0"

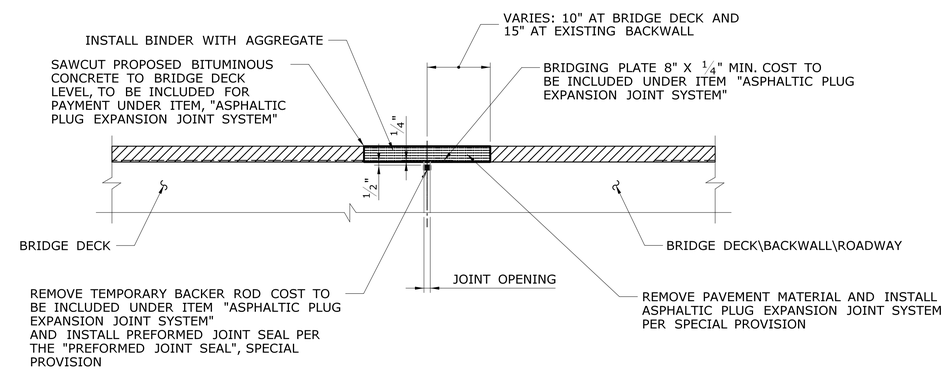

FINAL CONDITION

SCALE: 1" = 1'-0"

NOTE:

PLACE TACK COAT ALONG VERTICAL FACES AND ON TOP OF THE WEARING SURFACE AT THE SAW-CUT, TO BE PAID FOR UNDER THE ITEM "MATERIAL FOR TACK COAT".

PROPOSED ASPHALTIC PLUG EXPANSION JOINT SYSTEM
SUGGESTED SEQUENCE OF WORK

REV.	DATE	REVISION DESCRIPTION	SHEET NO.

THE INFORMATION, INCLUDING ESTIMATED QUANTITIES OF WORK, SHOWN ON THESE SHEETS IS BASED ON LIMITED INVESTIGATIONS BY THE STATE AND IS IN NO WAY WARRANTED TO INDICATE THE CONDITIONS OF ACTUAL QUANTITIES OF WORK WHICH WILL BE REQUIRED.

Plotted Date: 9/25/2018

DESIGNER/DRAFTER: B.A./S.C.
CHECKED BY: J.H.M. II
SCALE AS NOTED

STATE OF CONNECTICUT
DEPARTMENT OF TRANSPORTATION

Filename: ...\SB_MSH_173_462_BR02295_S-76_JOINT-3.dgn

SIGNATURE/BLOCK:
Close, Jensen and Miller, P.C.
1137 Silas Deane Highway
Wethersfield, CT 06109

PROJECT TITLE:
REHABILITATION OF BRIDGE NO. 02295, ROUTE 136 OVER NORWALK RIVER

TOWN: NORWALK

DRAWING TITLE:
JOINT REPAIR DETAILS - 3

PROJECT NO. 173-462
DRAWING NO. S-76
SHEET NO. 03.76

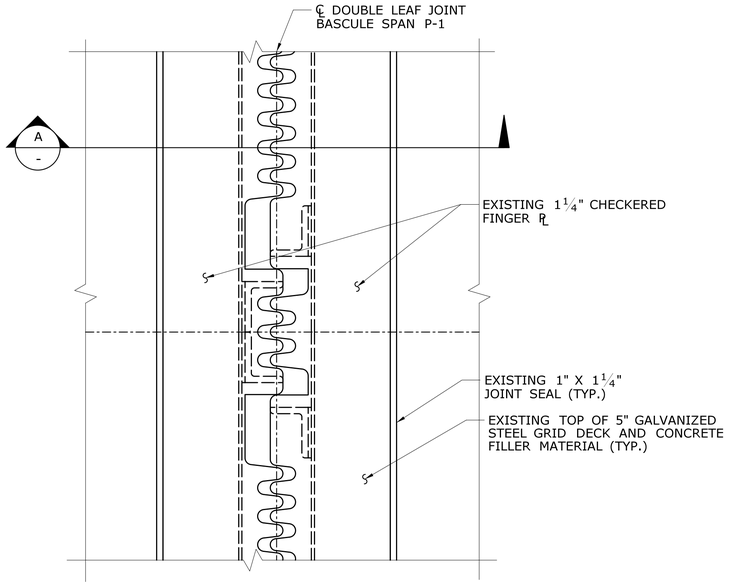

PARTIAL PLAN OF JOINT AT ROADWAY

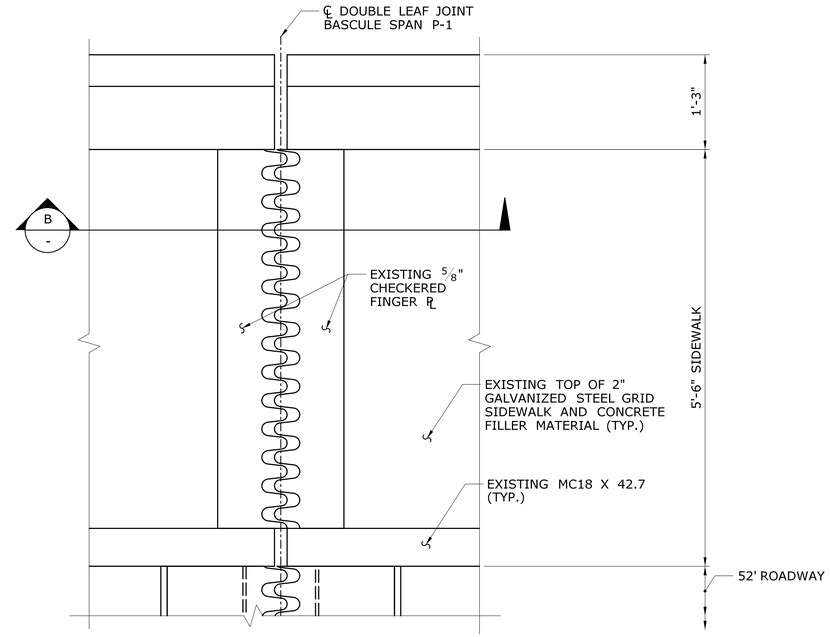

PARTIAL PLAN OF JOINT AT SIDEWALK

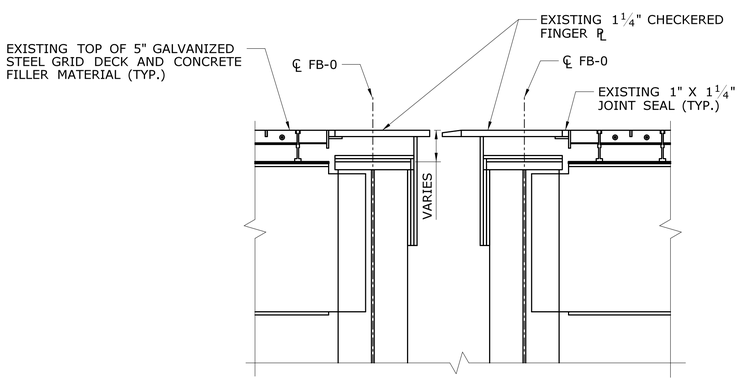

SECTION A -

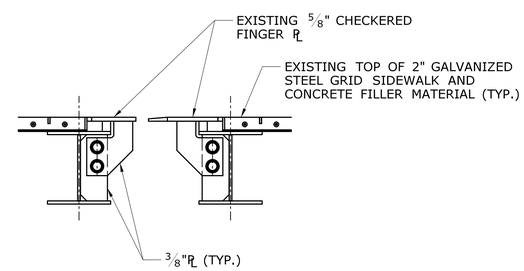

SECTION B -

SPAN P-1 (BASCULE SPAN)

FOR INFORMATION ONLY

REV.	DATE	REVISION DESCRIPTION	SHEET NO.

THE INFORMATION, INCLUDING ESTIMATED QUANTITIES OF WORK, SHOWN ON THESE SHEETS IS BASED ON LIMITED INVESTIGATIONS BY THE STATE AND IS IN NO WAY WARRANTED TO INDICATE THE CONDITIONS OF ACTUAL QUANTITIES OF WORK WHICH WILL BE REQUIRED.

Plotted Date: 9/25/2018

DESIGNER/DRAFTER: B.A./S.C.
CHECKED BY: J.H.M. II
SCALE: 1" = 1'-0"

STATE OF CONNECTICUT
DEPARTMENT OF TRANSPORTATION

Filename: ...\SB_MSH_173_462_BR02295_S-77_JOINT-4.dgn

SIGNATURE/ BLOCK:
Close, Jensen and Miller, P.C.
1137 Silas Deane Highway
Wethersfield, CT 06109

PROJECT TITLE:
REHABILITATION OF BRIDGE NO. 02295, ROUTE 136 OVER NORWALK RIVER

TOWN: **NORWALK**

DRAWING TITLE: **JOINT REPAIR DETAILS - 4**

PROJECT NO. 173-462
DRAWING NO. S-77
SHEET NO. 03.77

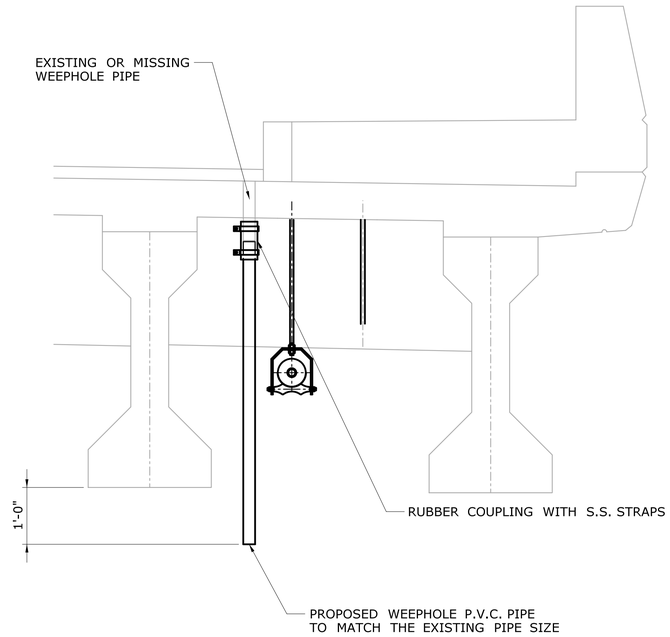

TYPICAL SECTION

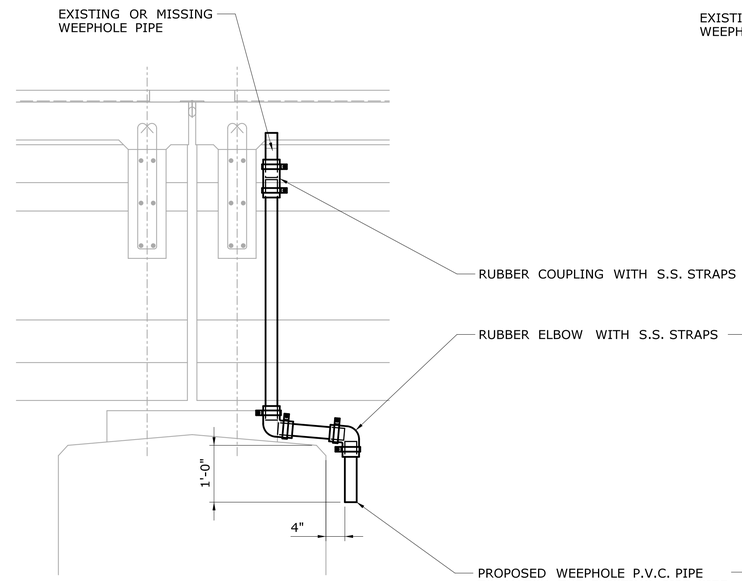

DETAIL AT PIER

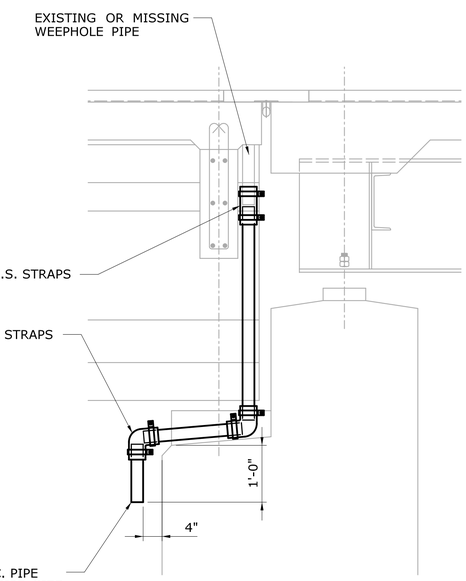

DETAIL AT ABUTMENT

WEEPHOLE PIPE REPAIRS

SCALE: 3/4" = 1'-0"

WEEPHOLE NOTES:

1. EXTEND EXISTING WEEPHOLES SHALL BE PAID FOR UNDER THE ITEM "EXTEND EXISTING WEEPHOLES".
2. THE CONTRACTOR SHALL UNDERTAKE A SURVEY OF THE EXISTING WEEPHOLES LOCATION PRIOR TO START OF ANY WORK AND INFORM THE ENGINEER IF CONDITIONS OF EXISTING WEEPHOLES DO NOT REFLECT WHAT IS SHOWN ON THE WEEPHOLE PIPE REPAIR DETAILS. THE COST TO DO THE SURVEY IS INCLUDED IN THE "EXTEND EXISTING WEEPHOLES" SPECIAL PROVISION.

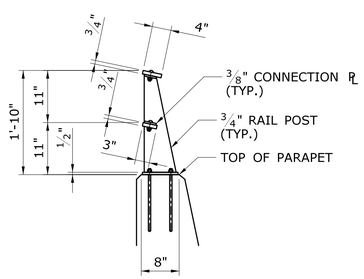

AT BRIDGE PARAPET

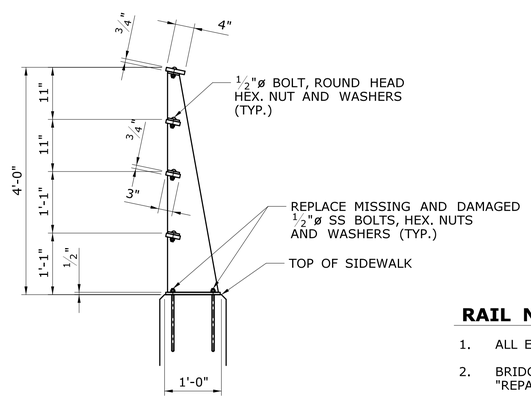

AT TRAFFIC GATE PLATFORM

EXISTING BRIDGE RAIL REPAIRS

SCALE: 3/4" = 1'-0"

RAIL NOTES:

1. ALL EXISTING RAILING MATERIAL IS ALUMINUM.
2. BRIDGE RAIL REPAIRS SHALL BE PAID FOR UNDER THE ITEM "REPAIR METAL BRIDGE RAIL" AS DIRECTED BY THE ENGINEER.

REV.	DATE	REVISION DESCRIPTION	SHEET NO.

THE INFORMATION, INCLUDING ESTIMATED QUANTITIES OF WORK, SHOWN ON THESE SHEETS IS BASED ON LIMITED INVESTIGATIONS BY THE STATE AND IS IN NO WAY WARRANTED TO INDICATE THE CONDITIONS OF ACTUAL QUANTITIES OF WORK WHICH WILL BE REQUIRED.

Plotted Date: 9/25/2018

DESIGNER/DRAFTER: B.A./S.C.
CHECKED BY: J.H.M. II
SCALE AS NOTED

STATE OF CONNECTICUT
DEPARTMENT OF TRANSPORTATION

Filename: ...\SB_MSH_173_462_BR02295_S-78_MISC-1.dgn

SIGNATURE/BLOCK:
Close, Jensen and Miller, P.C.
1137 Silas Deane Highway
Wethersfield, CT 06109

PROJECT TITLE:
REHABILITATION OF BRIDGE NO. 02295, ROUTE 136 OVER NORWALK RIVER

TOWN: NORWALK

DRAWING TITLE: MISCELLANEOUS DETAILS

PROJECT NO. 173-462
DRAWING NO. S-78
SHEET NO. 03.78

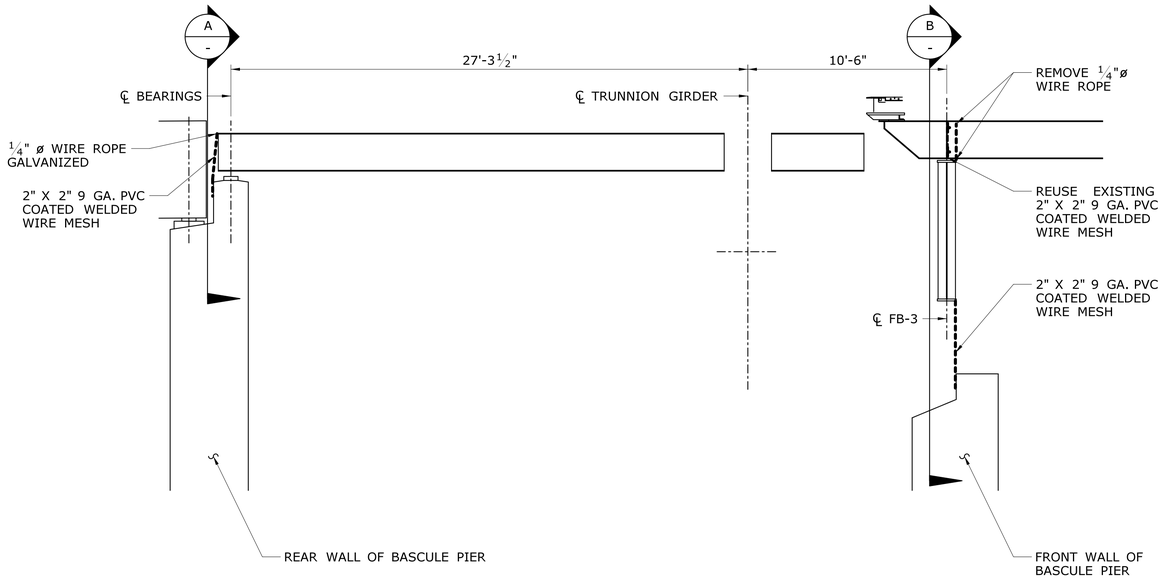

SECTION AT BASCULE PIER

SCALE: 1/4" = 1'-0"

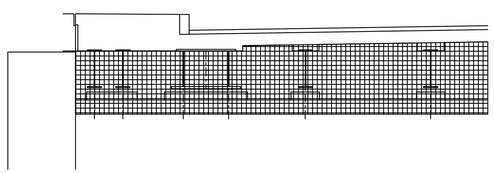

SECTION A -

SCALE: 1/4" = 1'-0"

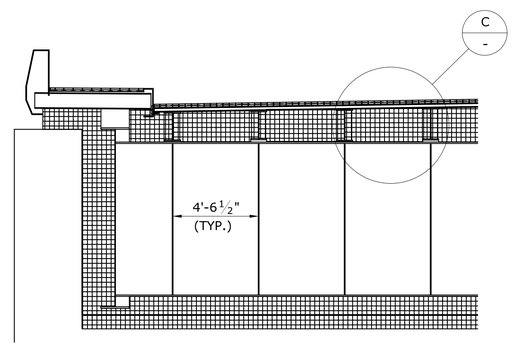

SECTION B -

SCALE: 1/4" = 1'-0"

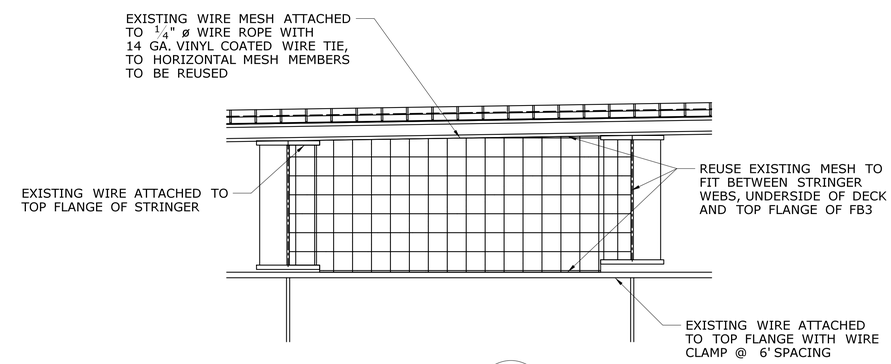

EXIST. DETAIL C -

SCALE: 1" = 1'-0"

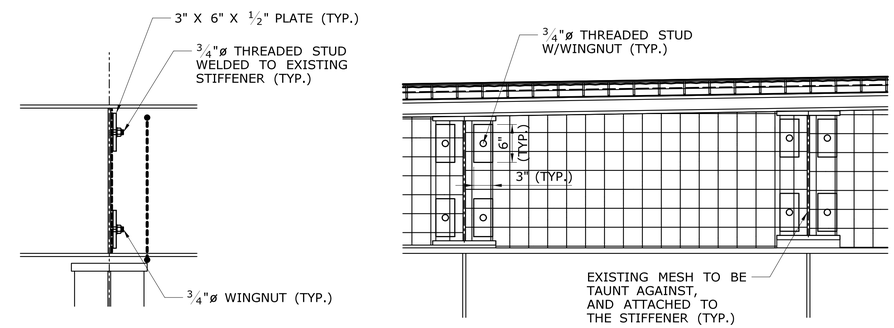

PROPOSED DETAIL C -

SCALE: 1" = 1'-0"

NOTES:

1. ALL MATERIAL AND HARDWARE FOR THE AVIARY PROTECTION SCREEN SHALL BE INCLUDED IN THE ITEM "FURNISH AND INSTALL BIRD CONTROL SYSTEM".
2. THE EXISTING WELDED WIRE MESH MAY BE TRIMMED TO FIT AROUND OBSTRUCTIONS SUCH AS SUPERSTRUCTURE AND SUBSTRUCTURE ELEMENTS SO THAT LESS THAN ONE INCH EXISTS BETWEEN THE TRIMMED WIRE AND THE OBSTRUCTION. NO GAP OR SPACE SHALL BE GREATER THAN 2" X 2".
3. SEE SPECIAL PROVISION FOR "FURNISH AND INSTALL BIRD CONTROL SYSTEM".

REV.	DATE	REVISION DESCRIPTION	SHEET NO.

THE INFORMATION, INCLUDING ESTIMATED QUANTITIES OF WORK, SHOWN ON THESE SHEETS IS BASED ON LIMITED INVESTIGATIONS BY THE STATE AND IS IN NO WAY WARRANTED TO INDICATE THE CONDITIONS OF ACTUAL QUANTITIES OF WORK WHICH WILL BE REQUIRED.

Plotted Date: 9/25/2018

DESIGNER/DRAFTER: B.A./S.C.
CHECKED BY: J.H.M. II
SCALE AS NOTED

STATE OF CONNECTICUT
DEPARTMENT OF TRANSPORTATION

Filename: ...\SB_MSH_173_462_BR02295_S-79_AVIARY_SCREEN.dgn

SIGNATURE/BLOCK:
Close, Jensen and Miller, P.C.
1137 Silas Deane Highway
Wethersfield, CT 06109

PROJECT TITLE:
REHABILITATION OF BRIDGE NO. 02295, ROUTE 136 OVER NORWALK RIVER

TOWN: NORWALK

DRAWING TITLE: AVIARY PROTECTION SCREEN REPAIR DETAILS

PROJECT NO. 173-462
DRAWING NO. S-79
SHEET NO. 03.79

GENERAL NOTE:

ALL WORK ADJACENT TO THE NAVIGATION CHANNEL BETWEEN PIER NOS. 1 AND 2 SHALL BE PERFORMED IN ACCORDANCE WITH THE "GENERAL CONSTRUCTION REQUIREMENTS" OF THE U.S. COAST GUARD AS SPECIFIED IN THE CONTRACT SPECIAL PROVISIONS. THE EXISTING MINIMUM VERTICAL CLEARANCE OF 10.5 FEET ABOVE THE MEAN HIGH WATER ELEVATION SHALL BE MAINTAINED AT ALL TIMES. FLOATING WORK PLATFORMS WILL BE ALLOWED TO ACCESS THE FENDER SYSTEM WORK WITHIN THE NAVIGATION CHANNEL. SPUDDING OF BARGES WILL NOT BE ALLOWED, AND FLOATING WORK PLATFORMS MUST BE REMOVED FROM THE NAVIGATION CHANNEL WHEN WORK IS NOT BEING PERFORMED FROM THEM. FENDER REPAIRS SHALL BE ABOVE THE HIGH TIDE LINE ELEVATION. FLOATING WORK PLATFORMS WILL NOT BE PERMITTED TO REST ON THE BOTTOM OF THE CHANNEL AT ANY TIME DURING THE CONSTRUCTION.

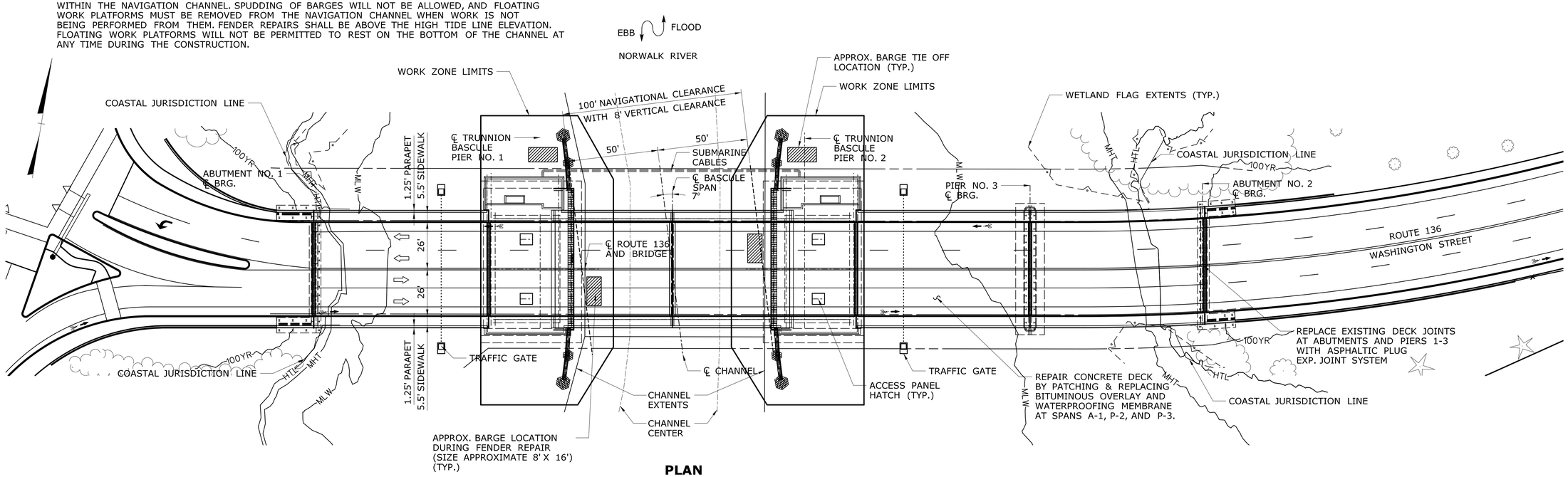

PLAN

SCALE: 1" = 30'

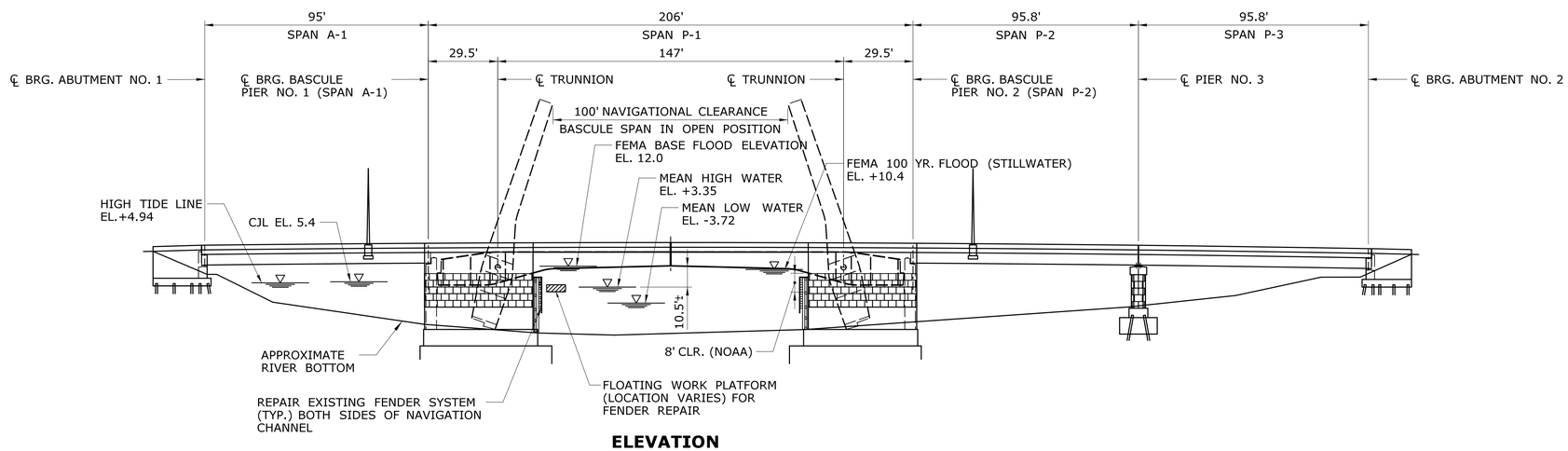

ELEVATION

SCALE: 1" = 30'

NOTES:

1. FLOATING WORK PLATFORMS MAY BE UTILIZED FOR FENDER REPAIR OPERATIONS. THE TIMES WHEN THE PLATFORM CAN OCCUPY THE CHANNEL ARE LIMITED TO DAYTIME WORKING HOURS. PLATFORMS MAY ONLY BE UTILIZED ON ONE SIDE OF THE CHANNEL AT A TIME WHILE MAINTAINING A MINIMUM CHANNEL WIDTH OF 50'.
2. ALL TEMPORARY FACILITIES AND EQUIPMENT BELOW THE 100 YEAR FLOOD ELEVATION WILL BE SUBJECT TO REMOVAL IN THE EVENT OF A FLOOD WARNING. THIS REMOVAL SHALL BE PERFORMED UNDER AN APPROPRIATE EVACUATION PLAN TO BE APPROVED BY THE ENGINEER.
3. THE CONTRACTOR WILL BE REQUIRED TO PROVIDE DEBRIS SHIELDING WHERE IT IS ANTICIPATED THAT FULL DEPTH DECK PATCHING WILL OCCUR.

REV.	DATE	REVISION DESCRIPTION	SHEET NO.

THE INFORMATION, INCLUDING ESTIMATED QUANTITIES OF WORK, SHOWN ON THESE SHEETS IS BASED ON LIMITED INVESTIGATIONS BY THE STATE AND IS IN NO WAY WARRANTED TO INDICATE THE CONDITIONS OF ACTUAL QUANTITIES OF WORK WHICH WILL BE REQUIRED.

Plotted Date: 9/25/2018

DESIGNER/DRAFTER: B.A./S.C.
CHECKED BY: J.H.M. II
SCALE AS NOTED

STATE OF CONNECTICUT
DEPARTMENT OF TRANSPORTATION

Filename: ...\SB_MSH_173_462_BR02295_S-80_FENDER.dgn

SIGNATURE/BLOCK:
Close, Jensen and Miller, P.C.
1137 Silas Deane Highway
Wethersfield, CT 06109

PROJECT TITLE:
REHABILITATION OF BRIDGE NO. 02295, ROUTE 136 OVER NORWALK RIVER

TOWN: **NORWALK**

DRAWING TITLE: **FENDER REPAIR**

PROJECT NO. 173-462
DRAWING NO. S-80
SHEET NO. 03.80

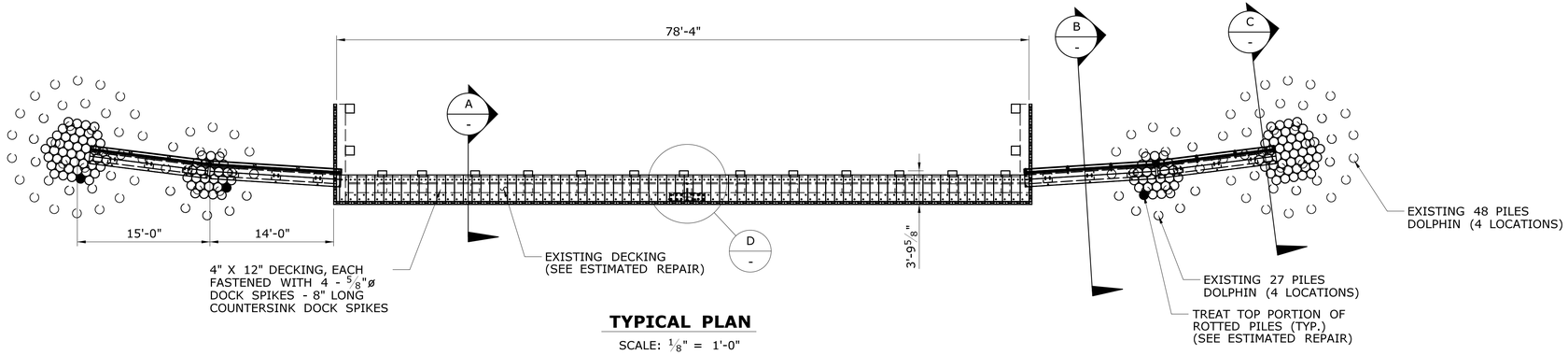

TYPICAL PLAN

SCALE: 1/8" = 1'-0"

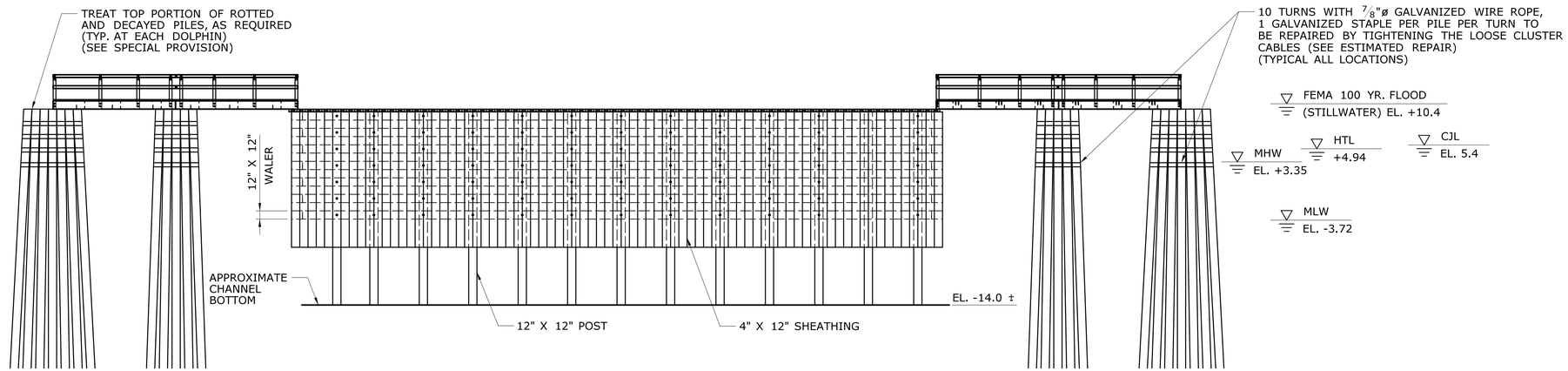

TYPICAL ELEVATION

SCALE: 1/8" = 1'-0"

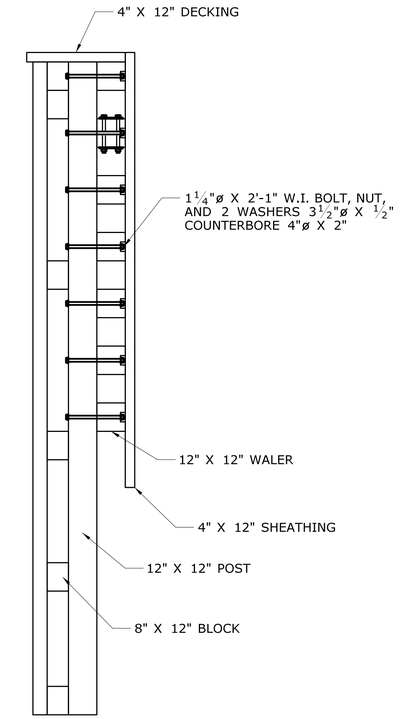

SECTION A

SCALE: 3/8" = 1'-0"

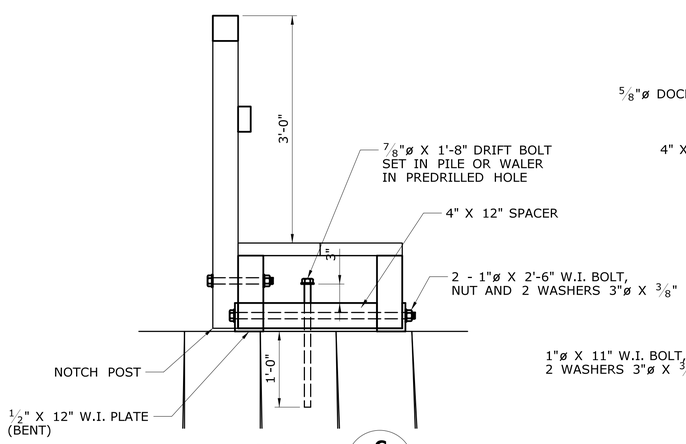

SECTION C

SCALE: 1" = 1'-0"

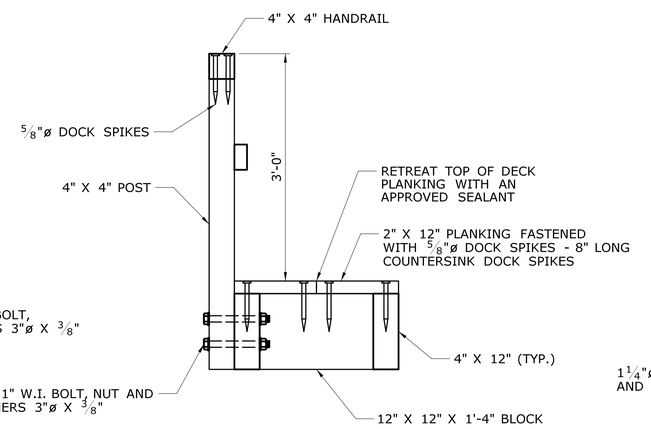

SECTION B

SCALE: 1" = 1'-0"

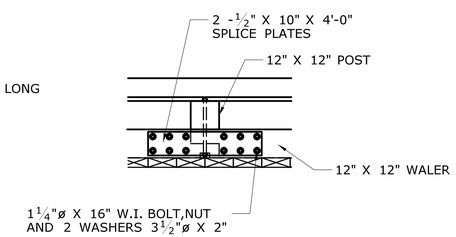

DETAIL D

SCALE: 3/8" = 1'-0"

DOLPHIN REPAIR NOTES:

1. REPAIR GALVANIZED WIRE ROPES BY TIGHTENING AND REPAIR/ REPLACE EXISTING HANDRAIL IN KIND AS DIRECTED BY THE ENGINEER AND IN ACCORDANCE WITH THE SPECIAL PROVISION "FENDER SYSTEM".
2. REPLACE EXISTING DAMAGED OR DETERIORATED FENDER BOARDS, PLANKING SHEATING, RAILS OR POSTS AND FASTENERS IN KIND AS DIRECTED BY THE ENGINEER AND IN ACCORDANCE WITH THE SPECIAL PROVISION "FENDER SYSTEM".
3. THIS WORK WILL BE PAID FOR UNDER THE ITEM "FENDER SYSTEM". THE CONTRACTOR SHALL PROVIDE THE ENGINEER WITH ACCESS FOR INSPECTION. THIS WILL BE INCLUDED IN THE PAY ITEM "FENDER SYSTEM" (SEE SPECIAL PROVISION).
4. THIS WORK WILL REQUIRE COORDINATION WITH THE COAST GUARD NAVIGATION CHANNEL.
5. ALL WORK SHALL BE IN ACCORDANCE WITH PERMITS CONTAINED ELSEWHERE IN THE CONTRACT DOCUMENTS.
6. NO WORK SHALL BE DONE BELOW THE HIGH TIDE LINE ELEVATION.

ESTIMATED REPAIR:
1. DECKING = 20 L.F.
2. TIMBER PILES = 4 EA. PER PILE DOLPHIN.
3. 10-TURN 7/8"ø GALVANIZED WIRE ROPE PER PILE DOLPHIN = 4 EA.

REV.	DATE	REVISION DESCRIPTION	SHEET NO.

THE INFORMATION, INCLUDING ESTIMATED QUANTITIES OF WORK, SHOWN ON THESE SHEETS IS BASED ON LIMITED INVESTIGATIONS BY THE STATE AND IS IN NO WAY WARRANTED TO INDICATE THE CONDITIONS OF ACTUAL QUANTITIES OF WORK WHICH WILL BE REQUIRED.

Plotted Date: 9/25/2018

DESIGNER/DRAFTER: B.A./S.C.
CHECKED BY: J.H.M. II

STATE OF CONNECTICUT
DEPARTMENT OF TRANSPORTATION

Filename: ...\SB_MSH_173_462_BR02295_S-81_DOLPHIN.dgn

SIGNATURE/ BLOCK:
Close, Jensen and Miller, P.C.
1137 Silas Deane Highway
Wethersfield, CT 06109

PROJECT TITLE:
REHABILITATION OF BRIDGE NO. 02295, ROUTE 136 OVER NORWALK RIVER

TOWN: NORWALK

DRAWING TITLE: DOLPHIN REPAIR DETAILS

PROJECT NO. 173-462
DRAWING NO. S-81
SHEET NO. 03.81