05 - HIGHWAY
INDEX OF DRAWINGS

DRAWING NUMBER	DRAWING TITLE	DRAWING NUMBER	DRAWING TITLE
HWY-01	SUBSET COVER SHEET - INDEX OF DRAWINGS		
HWY-02	ROADWAY PLAN		
HWY-03	PAVEMENT SECTION DETAILS		

DESIGNED BY:
CLOSE, JENSEN AND MILLER, PC

Close, Jensen and Miller, P.C.
1137 Silas Deane Highway
Wethersfield, CT 06109

Digitally signed by John Miller
Date: 2018.09.25 12:05:28-04'00'

REV.	DATE	REVISION DESCRIPTION	SHEET NO.

THE INFORMATION, INCLUDING ESTIMATED QUANTITIES OF WORK, SHOWN ON THESE SHEETS IS BASED ON LIMITED INVESTIGATIONS BY THE STATE AND IS IN NO WAY WARRANTED TO INDICATE THE CONDITIONS OF ACTUAL QUANTITIES OF WORK WHICH WILL BE REQUIRED.

Plotted Date: 9/25/2018

DESIGNER/DRAFTER: **D.T.C.**
CHECKED BY: **C.G.**

STATE OF CONNECTICUT
DEPARTMENT OF TRANSPORTATION

Filename: ..\HW_MSH_2_173_462_BR_02295_HWY_01_INDEX.dgn

SIGNATURE/ BLOCK:
Close, Jensen and Miller, P.C.
1137 Silas Deane Highway
Wethersfield, CT 06109

PROJECT TITLE:
REHABILITATION OF BRIDGE NO. 02295, ROUTE 136 OVER NORWALK RIVER

TOWN: **NORWALK**

DRAWING TITLE: **SUBSET COVER SHEET INDEX OF DRAWINGS**

PROJECT NO. **173-462**
DRAWING NO. **HWY-01**
SHEET NO. **05.01**

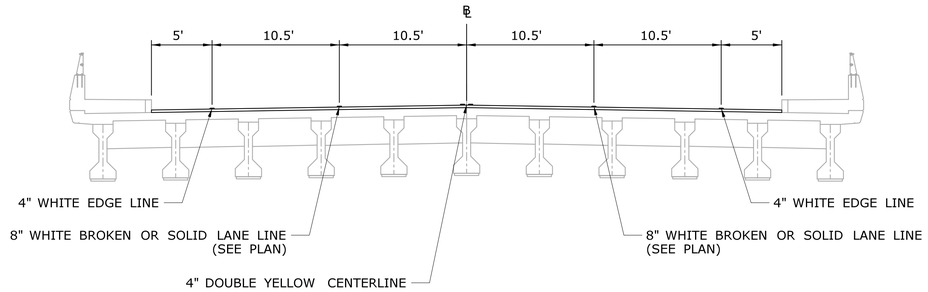

FINAL PAVEMENT MARKINGS

NOT TO SCALE

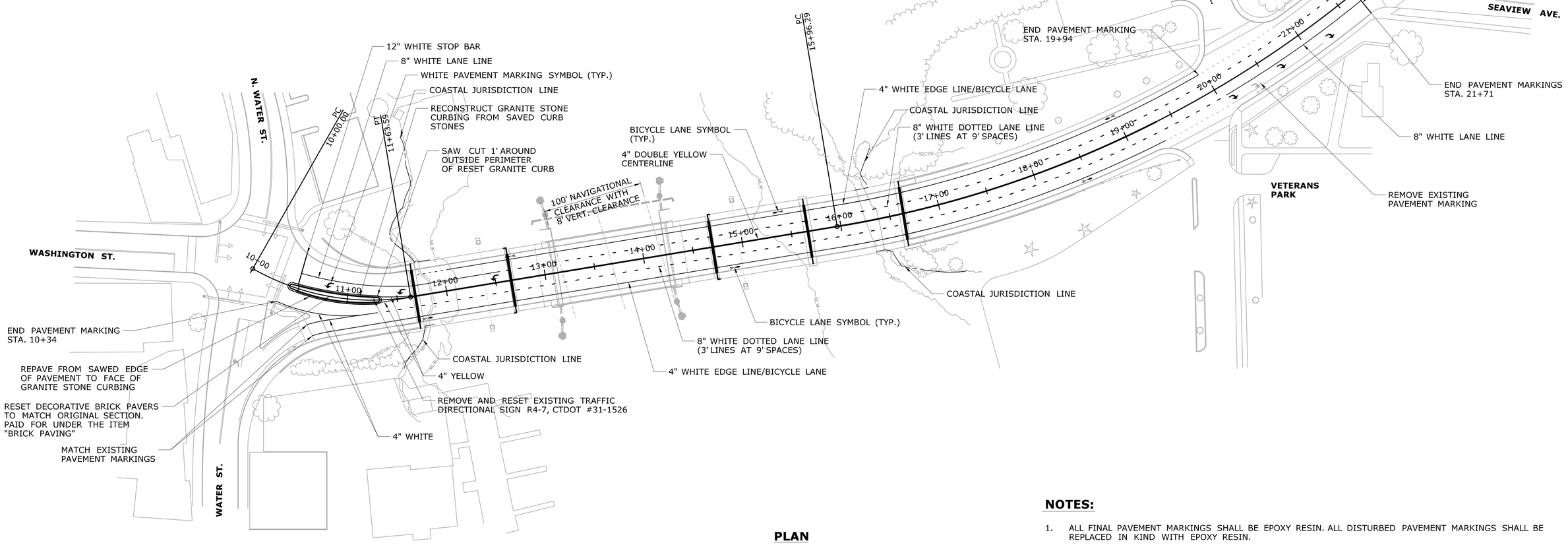

PLAN

NOTES:

1. ALL FINAL PAVEMENT MARKINGS SHALL BE EPOXY RESIN. ALL DISTURBED PAVEMENT MARKINGS SHALL BE REPLACED IN KIND WITH EPOXY RESIN.
2. PAVEMENT MARKINGS SHALL BE INSTALLED THROUGHOUT PROJECT AREA AS DIRECTED BY THE ENGINEER. ALL CONFLICTING PAVEMENT MARKINGS WITHIN PROJECT LIMITS SHALL BE REMOVED.
3. PAVEMENT MARKINGS SHALL BE INSTALLED PER TRAFFIC STANDARD SHEETS TR-1210-04 & TR-1210-08.
4. STATE WILL MAINTAIN ALL PAVEMENT MARKINGS ON RTE. 136.
5. REMOVE, STORE AND RESET OF GRANITE CURBING SHALL BE PAID FOR UNDER THE ITEM "RESET GRANITE STONE CURBING" AND "RESET GRANITE CURVED STONE CURBING".
6. REMOVAL OF ISLAND PAVEMENT AND SUBGRADE AS NECESSARY TO RECONSTRUCT THE ISLAND WILL BE PAID FOR UNDER THE ITEM "EARTH EXCAVATION".

LEGEND

- 100YR — FEMA 100 YR. FLOOD (STILLWATER)
- HTL — HIGH TIDE LINE
- MHT — MEAN HIGH WATER
- MLW — MEAN LOW WATER

REV.	DATE	REVISION DESCRIPTION	SHEET NO.

THE INFORMATION, INCLUDING ESTIMATED QUANTITIES OF WORK, SHOWN ON THESE SHEETS IS BASED ON LIMITED INVESTIGATIONS BY THE STATE AND IS IN NO WAY WARRANTED TO INDICATE THE CONDITIONS OF ACTUAL QUANTITIES OF WORK WHICH WILL BE REQUIRED.

Plotted Date: 9/25/2018

DESIGNER/DRAFTER: D.T.C.
CHECKED BY: C.G.
SCALE: 1" = 50'

STATE OF CONNECTICUT
DEPARTMENT OF TRANSPORTATION

Filename: ...\HW_MSH_2_173_462_BR_02295_HWY_02_PLN.dgn

SIGNATURE/BLOCK:
Close, Jensen and Miller, P.C.
1137 Silas Deane Highway
Wethersfield, CT 06109

PROJECT TITLE:
REHABILITATION OF BRIDGE NO. 02295, ROUTE 136 OVER NORWALK RIVER

TOWN: NORWALK

DRAWING TITLE: ROADWAY PLAN

PROJECT NO. 173-462
DRAWING NO. HWY-02
SHEET NO. 05.02

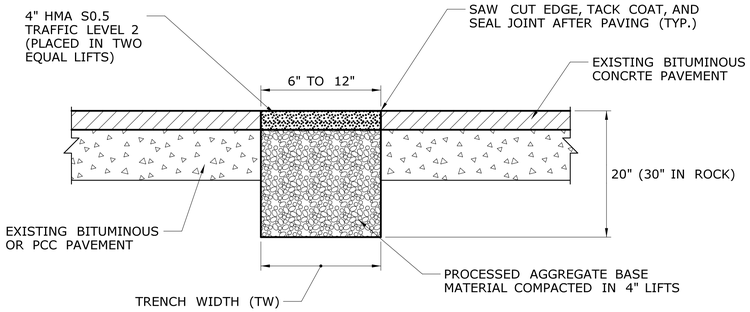

TEMPORARY PAVEMENT - FOR NARROW TRENCH THROUGH BITUMINOUS CONCRETE OR OVERLAID PORTLAND CEMENT CONCRETE (PCC) (TRENCH WIDTH BETWEEN 6" AND 12")

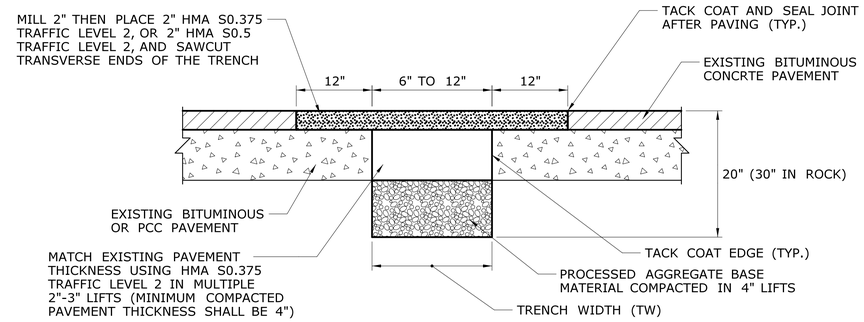

PERMANENT PAVEMENT - FOR NARROW TRENCH THROUGH BITUMINOUS CONCRETE OR OVERLAID PORTLAND CEMENT CONCRETE (PCC) (TRENCH WIDTH BETWEEN 6" AND 12")

GENERAL NOTES:

1. LONGITUDINAL TRENCHING FOR JOINTED CONCRETE PAVEMENT:

   A. IF THE LONGITUDINAL TRENCH FALLS BETWEEN THE SLAB CENTERLINE AND THE EDGE OF SLAB, REMOVE CONCRETE FROM THE TRENCH EDGE TO THE EDGE OF ROAD. IF THE LONGITUDINAL TRENCH FALLS BETWEEN THE LONGITUDINAL JOINT AND THE SLAB CENTERLINE, REMOVE THE ENTIRE CONCRETE SLAB AND BITUMINOUS PAVEMENT TO THE EDGE OF ROAD. IN EITHER CASE REBUILD THE FOLLOWING:

      a. PLACE HMA S1.0 TRAFFIC LEVEL 2 IN TWO EQUAL 4"-5" LIFTS TO MATCH EXISTING PAVEMENT THICKNESS

      b. PLACE HMA S0.5 TRAFFIC LEVEL 2 IN 2"-3" LIFTS TO MATCH EXISTING BITUMINOUS CONCRETE PAVEMENT THICKNESS WITH A FINAL LIFT OF 2"

2. TRANSVERSE TRENCHING FOR JOINTED CONCRETE PAVEMENT:

TABLE 1	
TOTAL SLAB LENGTH (L)	MIN. LENGTH REMAINING
40' OR LONGER	1/4 L
15'-40'	10'
15' OR SHORTER	REBUILD TO NEAREST JOINT

   A. FOR TRANSVERSE TRENCHES, THE MINIMUM SLAB LENGTH AS SHOWN IN TABLE 1 SHALL BE LEFT IN PLACE TO THE NEAREST TRANSVERSE JOINT. IF THIS CRITERIA CANNOT BE MET, THE EXISTING SLAB AREA FROM THE TRENCH EDGE TO THE NEAREST TRANSVERSE JOINT SHALL BE REMOVED AND REBUILT AS FOLLOWS:

      a. PLACE HMA S1.0 TRAFFIC LEVEL 2 IN TWO EQUAL 4"-5" LIFTS TO MATCH EXISTING PAVEMENT THICKNESS

      b. PLACE HMA S0.5 TRAFFIC LEVEL 2 IN 2"-3" LIFTS TO MATCH EXISTING BITUMINOUS CONCRETE PAVEMENT THICKNESS WITH A FINAL LIFT OF 2"

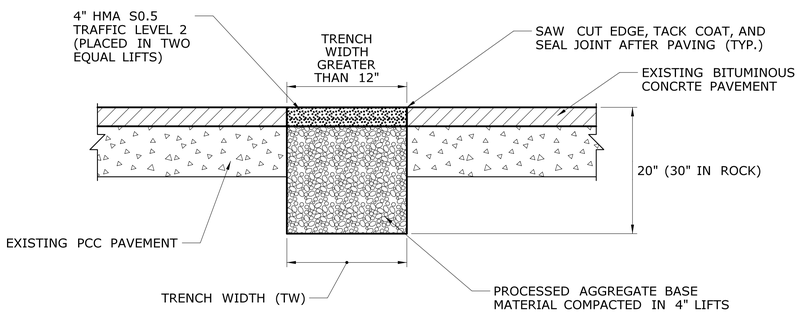

TEMPORARY PAVEMENT FOR TRENCH THROUGH OVERLAID PORTLAND CEMENT CONCRETE (PCC) (TRENCH WIDTH GREATER THAN 12")

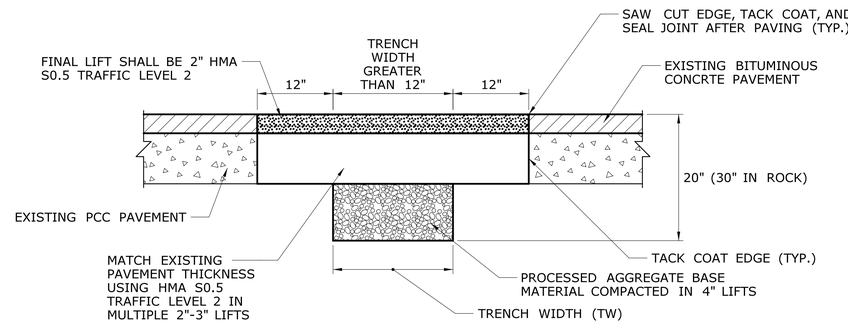

PERMANENT PAVEMENT FOR TRENCH THROUGH OVERLAID PORTLAND CEMENT CONCRETE (PCC) (TRENCH WIDTH GREATER THAN 12")

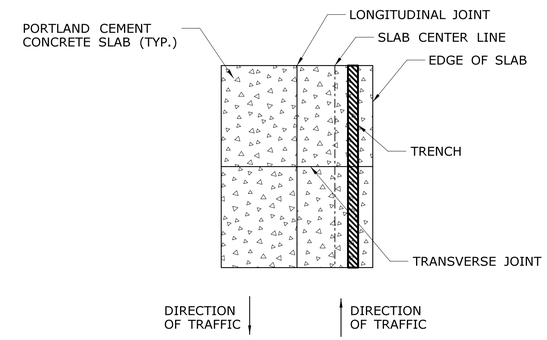

LONGITUDINAL TRENCHING FOR JOINTED CONCRETE PAVEMENT
(SEE NOTE 1)

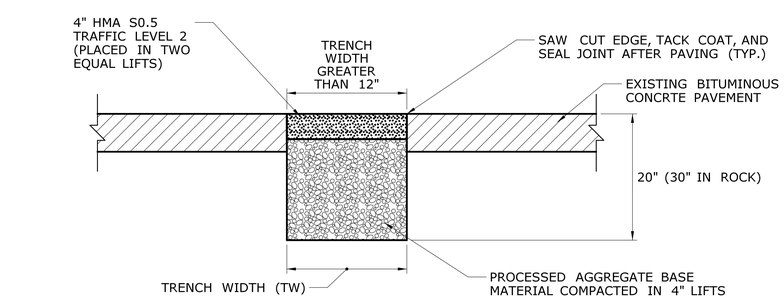

TEMPORARY PAVEMENT FOR TRENCH THROUGH BITUMINOUS CONCRETE (TRENCH WIDTH GREATER THAN 12")

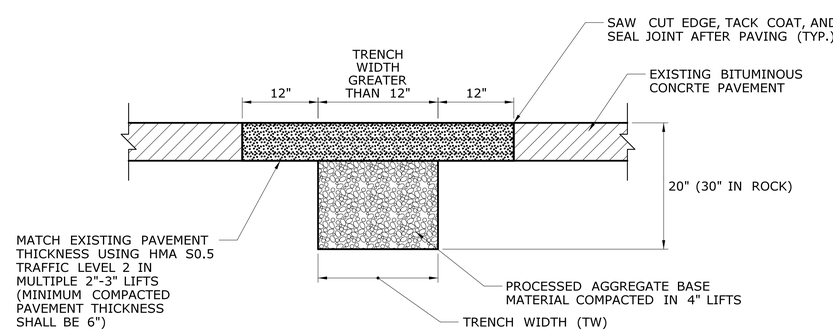

PERMANENT PAVEMENT FOR TRENCH THROUGH BITUMINOUS CONCRETE (TRENCH WIDTH GREATER THAN 12")

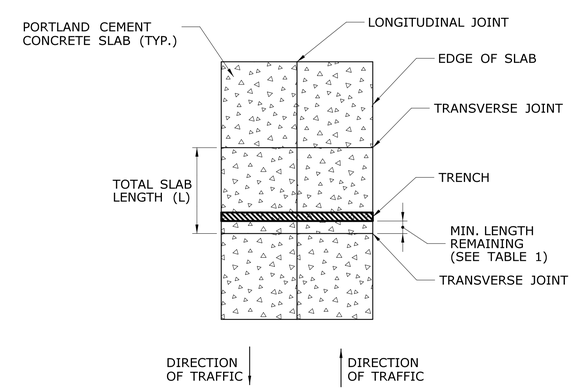

TRANSVERSE TRENCHING FOR JOINTED CONCRETE PAVEMENT
(SEE NOTE 2)

REV.	DATE	REVISION DESCRIPTION	SHEET NO.

THE INFORMATION, INCLUDING ESTIMATED QUANTITIES OF WORK, SHOWN ON THESE SHEETS IS BASED ON LIMITED INVESTIGATIONS BY THE STATE AND IS IN NO WAY WARRANTED TO INDICATE THE CONDITIONS OF ACTUAL QUANTITIES OF WORK WHICH WILL BE REQUIRED.

Plotted Date: 9/25/2018

DESIGNER/DRAFTER: D.T.C.
CHECKED BY: C.G.
NOT TO SCALE

STATE OF CONNECTICUT
DEPARTMENT OF TRANSPORTATION

Filename: ...\HW_MSH_2_173_462_BR_02295_HWY_03_PVMT REP.dgn

SIGNATURE/BLOCK:
Close, Jensen and Miller, P.C.
1137 Silas Deane Highway
Wethersfield, CT 06109

PROJECT TITLE:
REHABILITATION OF BRIDGE NO. 02295, ROUTE 136 OVER NORWALK RIVER

TOWN: **NORWALK**

DRAWING TITLE: **PAVEMENT SECTION DETAILS**

PROJECT NO. **173-462**
DRAWING NO. **HWY-03**
SHEET NO. **05.03**