TYPICAL SECTIONS

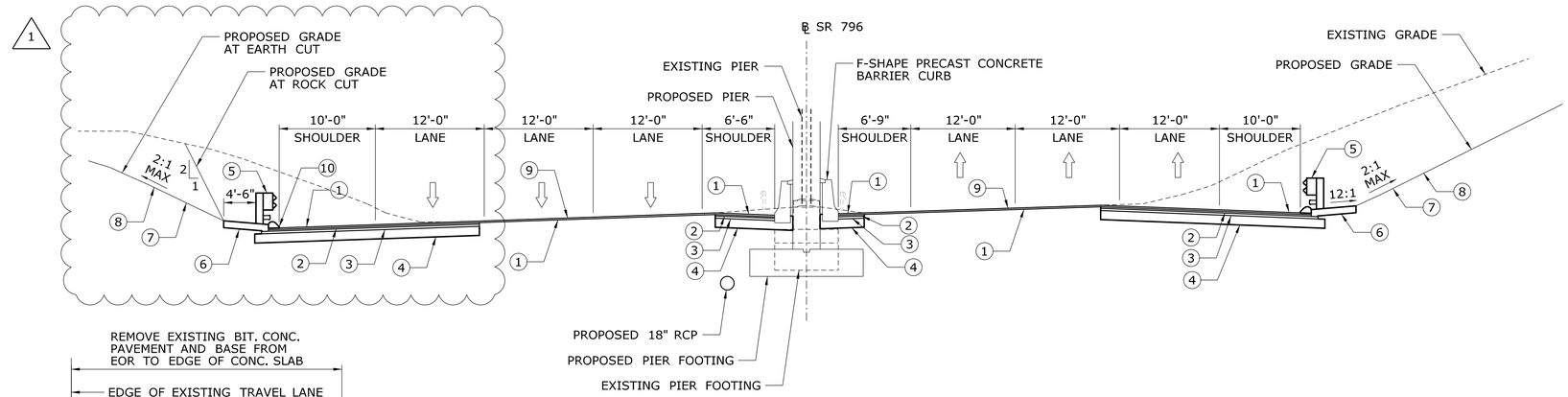

PROPOSED ROADWAY SECTION
SR 796
NOT TO SCALE

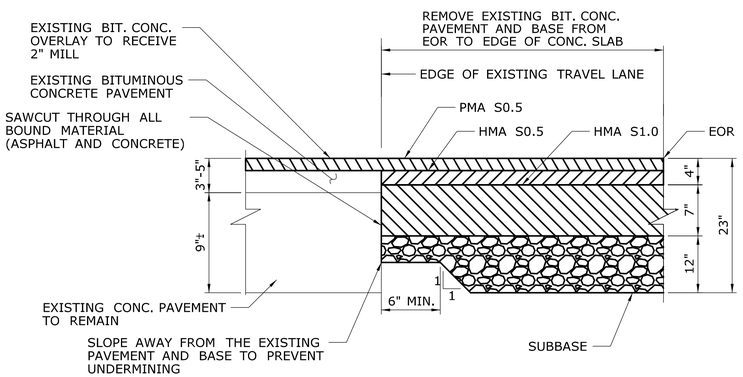

PAVEMENT WIDENING DETAIL FOR SR 796
PLACEMENT AT EXISTING PAVEMENT
NOT TO SCALE

1

LEGEND

1. 2" PMA S0.5 TRAFFIC LEVEL 3 (PLACED CONTINUOUS WITH 9)
2. 2" HMA S0.5 TRAFFIC LEVEL 3
3. 7" HMA S1.0 TRAFFIC LEVEL 3 (PLACED IN TWO EQUAL LIFTS)
4. 12" SUBBASE
5. METAL BEAM RAIL (R-B MASH) (AS SHOWN ON PLANS)
6. 6" PROCESSED AGGREGATE
7. 4" TOPSOIL AND TURF ESTABLISHMENT
8. EROSION CONTROL MATTING (TYPE 'C')
9. MILL 2" OF EXISTING BITUMINOUS CONCRETE OVERLAY (SEE PLN-02 FOR LIMITS OF MILL) AND OVERLAY 2"
10. CURBING (AS SHOWN ON PLANS)

1

SURVEY CONTROL

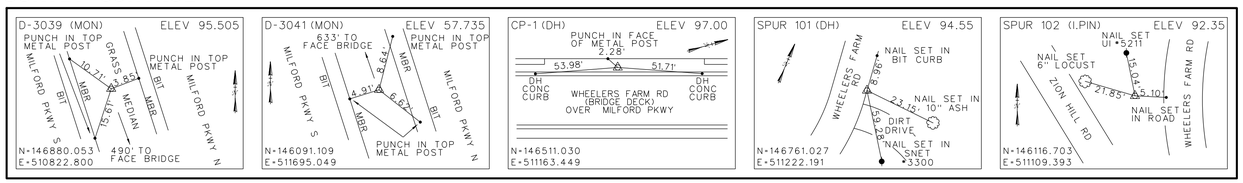

Andrew Lessard
2018.11.28
16:11:00-05'00'

ADDENDUM NO. 2

REV.	DATE	REVISION DESCRIPTION	SHEET NO.
-	-	-	-
-	-	-	-
-	-	-	-
-	-	-	-
-	-	-	-
1	11/27/18	REMOVED NOTE, REVISED SECTION	03.03.A2

THE INFORMATION, INCLUDING ESTIMATED QUANTITIES OF WORK, SHOWN ON THESE SHEETS IS BASED ON LIMITED INVESTIGATIONS BY THE STATE AND IS IN NO WAY WARRANTED TO INDICATE THE CONDITIONS OF ACTUAL QUANTITIES OF WORK WHICH WILL BE REQUIRED.

Plotted Date: 11/28/2018

DESIGNER/DRAFTER: JRA
CHECKED BY: AML
SCALE AS NOTED

STATE OF CONNECTICUT
DEPARTMENT OF TRANSPORTATION

Filename: ...\TYP-02_TYPICAL SECTIONS_A2.dgn

SIGNATURE/BLOCK:
Stantec Consulting Services Inc.
55 Church Street
Suite 601
New Haven, CT 06510

PROJECT TITLE:
REPLACEMENT OF BRIDGE NO. 01446, WHEELERS FARMS ROAD OVER SR 796

TOWN: **MILFORD**

DRAWING TITLE: **TYPICAL SECTIONS SR 796**

PROJECT NO. **83-264**
DRAWING NO. **TYP-02**
SHEET NO. **03.03.A2**

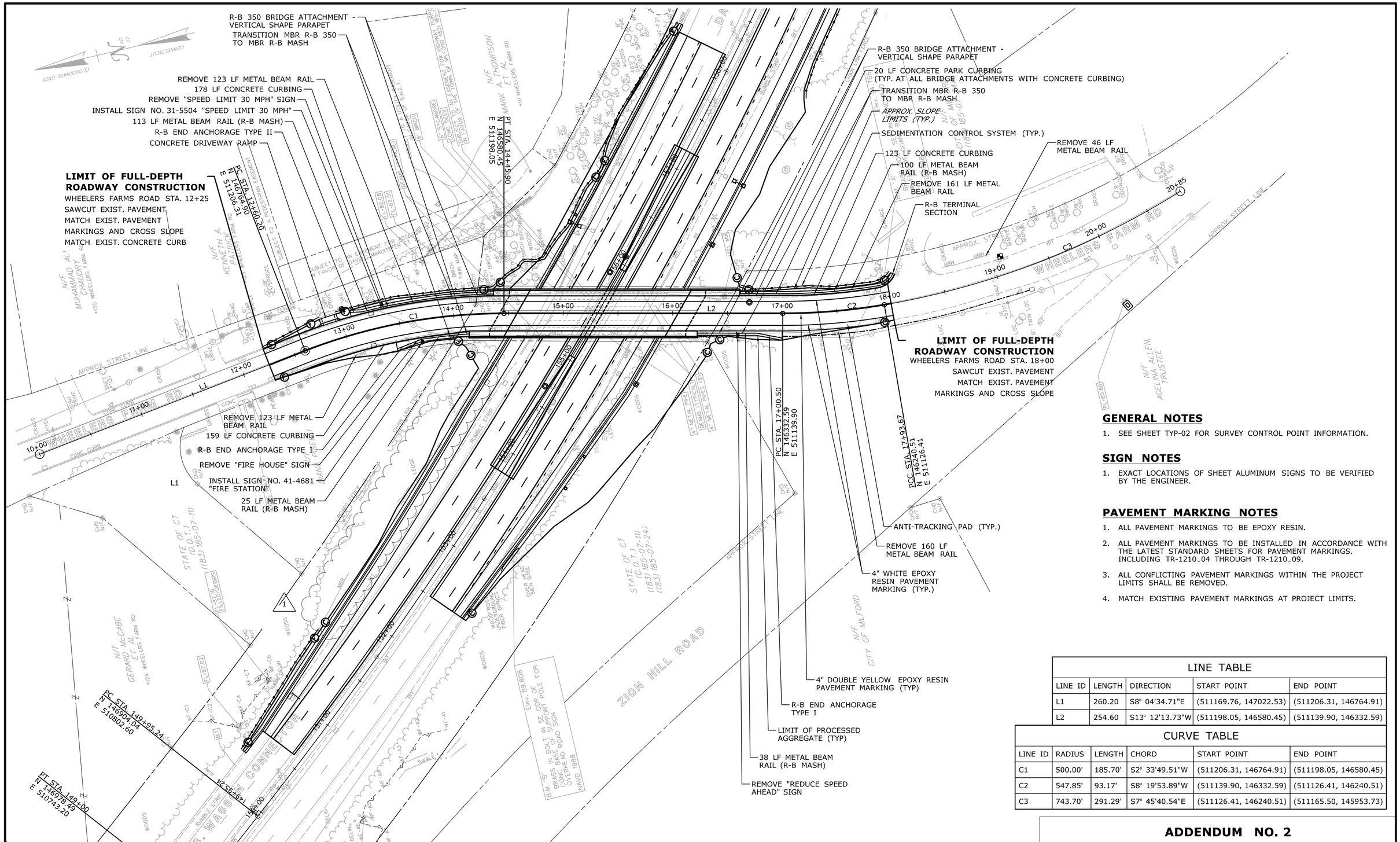

GENERAL NOTES

1. SEE SHEET TYP-02 FOR SURVEY CONTROL POINT INFORMATION.

SIGN NOTES

1. EXACT LOCATIONS OF SHEET ALUMINUM SIGNS TO BE VERIFIED BY THE ENGINEER.

PAVEMENT MARKING NOTES

1. ALL PAVEMENT MARKINGS TO BE EPOXY RESIN.
2. ALL PAVEMENT MARKINGS TO BE INSTALLED IN ACCORDANCE WITH THE LATEST STANDARD SHEETS FOR PAVEMENT MARKINGS. INCLUDING TR-1210_04 THROUGH TR-1210_09.
3. ALL CONFLICTING PAVEMENT MARKINGS WITHIN THE PROJECT LIMITS SHALL BE REMOVED.
4. MATCH EXISTING PAVEMENT MARKINGS AT PROJECT LIMITS.

LINE TABLE

LINE ID	LENGTH	DIRECTION	START POINT	END POINT
L1	260.20	S8° 04'34.71"E	(511169.76, 147022.53)	(511206.31, 146764.91)
L2	254.60	S13° 12'13.73"W	(511198.05, 146580.45)	(511139.90, 146332.59)

CURVE TABLE

LINE ID	RADIUS	LENGTH	CHORD	START POINT	END POINT
C1	500.00'	185.70'	S2° 33'49.51"W	(511206.31, 146764.91)	(511198.05, 146580.45)
C2	547.85'	93.17'	S8° 19'53.89"W	(511139.90, 146332.59)	(511126.41, 146240.51)
C3	743.70'	291.29'	S7° 45'40.54"E	(511126.41, 146240.51)	(511165.50, 145953.73)

ADDENDUM NO. 2

REV.	DATE	REVISION DESCRIPTION	SHEET NO.
-	-	-	-
-	-	-	-
-	-	-	-
-	-	-	-
-	-	-	-
1	11/27/18	REVISED CUT LINE	03.04.A2

THE INFORMATION, INCLUDING ESTIMATED QUANTITIES OF WORK, SHOWN ON THESE SHEETS IS BASED ON LIMITED INVESTIGATIONS BY THE STATE AND IS IN NO WAY WARRANTED TO INDICATE THE CONDITIONS OF ACTUAL QUANTITIES OF WORK WHICH WILL BE REQUIRED.

Plotted Date: 11/28/2018

DESIGNER/DRAFTER: KG
CHECKED BY: AML
SCALE IN FEET 0 40 80
SCALE 1"=40'

STATE OF CONNECTICUT
DEPARTMENT OF TRANSPORTATION

Filename: ...\PLN-01 HIGHWAY PLAN 2d - WFR_A2.dgn

SIGNATURE/BLOCK:
Stantec Consulting Services Inc.
55 Church Street
Suite 601
New Haven, CT 06510

PROJECT TITLE:
REPLACEMENT OF BRIDGE NO. 01446, WHEELERS FARMS ROAD OVER SR 796

TOWN: **MILFORD**

DRAWING TITLE: **ROADWAY PLAN WHEELERS FARMS ROAD**

PROJECT NO. 83-264
DRAWING NO. PLN-01
SHEET NO. 03.04.A2

CURVE TABLE			
LINE ID	RADIUS	LENGTH	CHORD
C4	3819.83'	1818.91'	S52° 13'25.68"E
START POINT		END POINT	
(510802.60, 146904.04)		(512226.74, 145800.31)	

LINE TABLE		
LINE ID	LENGTH	DIRECTION
L3	95.24	S38° 34'56.61"E
START POINT		END POINT
(510743.20, 146978.49)		(510802.60, 146904.04)

LEGEND

FULL DEPTH ROAD CONSTRUCTION

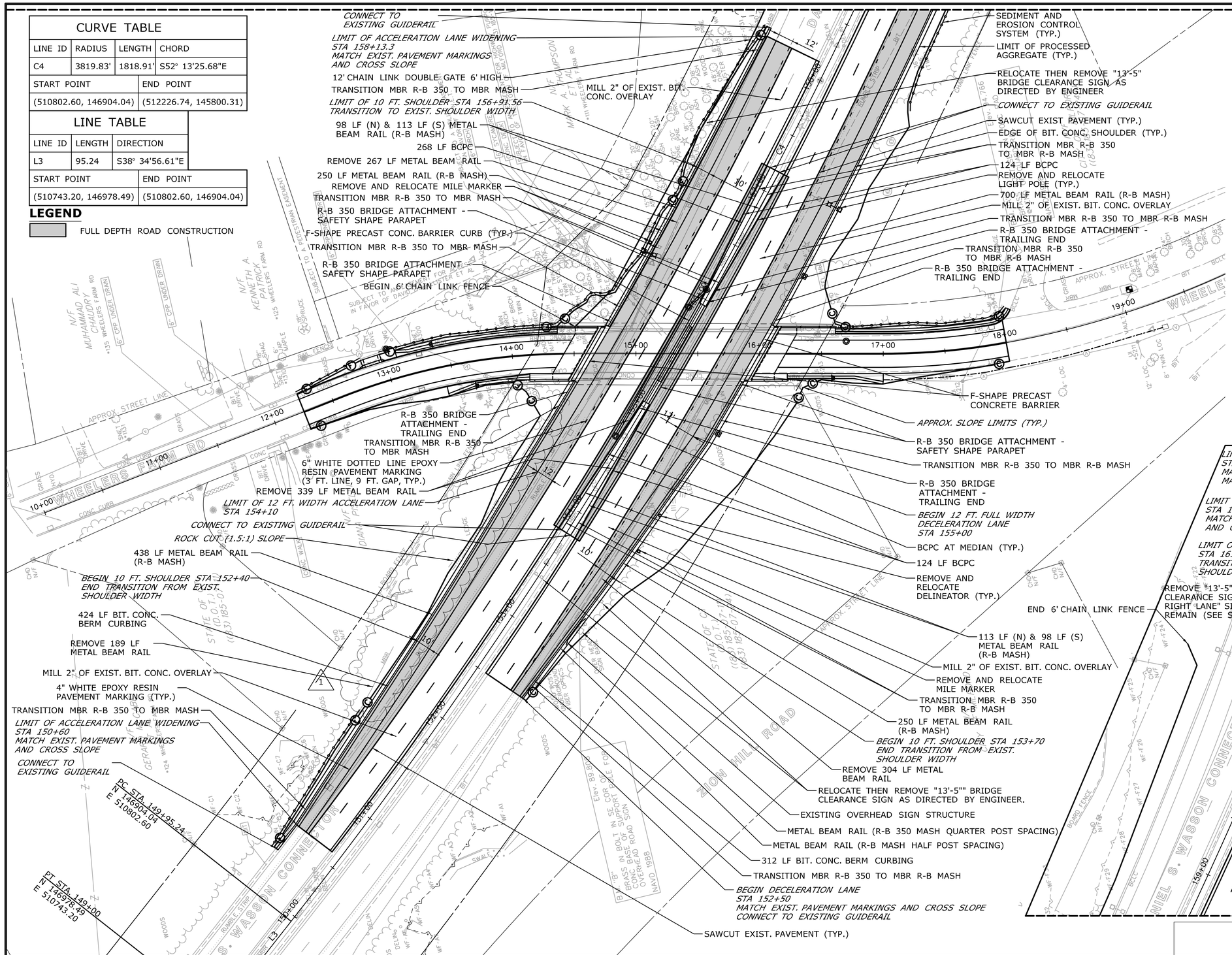

MATCHLINE THIS SHEET

GENERAL NOTES

1. SAW CUTTING OF ALL PAVEMENT ON SR 796, INCLUDING THOSE AREAS WHERE CONCRETE PAVEMENT IS NOT PRESENT, SHALL BE PAID FOR UNDER THE ITEM "CUT CONCRETE PAVEMENT".

SIGN NOTES

1. SIGNS TO BE REMOVED AND RELOCATED WITH NEW POST AND NEW HARDWARE TO BE PAID FOR UNDER ITEM "REMOVAL AND RELOCATION OF EXISTING SIGNS".
2. EXISTING BRIDGE MOUNTED VMS WILL BE RELOCATED UNDER PROJECT 92-646/647.
3. EXACT LOCATIONS OF SHEET ALUMINUM SIGNS TO BE VERIFIED BY THE ENGINEER.
4. ALL SIGNS TO BE INSTALLED NO LESS THAN 10 FEET FROM UTILITY POLES.
5. ALL OTHER EXISTING SIGNS WITHIN PROJECT LIMITS THAT ARE NOT CALLED OUT TO BE RELOCATED SHALL BE REMOVED.

PAVEMENT MARKING NOTES

1. ALL PAVEMENT MARKINGS TO BE EPOXY RESIN.
2. ALL PAVEMENT MARKINGS TO BE INSTALLED IN ACCORDANCE WITH THE LATEST STANDARD SHEETS FOR PAVEMENT MARKINGS. INCLUDING TR-1210_04 THROUGH TR-1210_09.
3. STATE TO MAINTAIN ALL PAVEMENT MARKINGS.
4. ALL CONFLICTING PAVEMENT MARKINGS WITHIN THE PROJECT LIMITS SHALL BE REMOVED.
5. MATCH EXISTING PAVEMENT MARKINGS AT PROJECT LIMITS.

LANDSCAPE DESIGN NOTES

1. THE ENGINEER SHALL COORDINATE THE FINAL LOCATION OF THE 6' CHAIN LINK FENCE WITH THE LANDSCAPE DESIGNER AND PROPERTY OWNERS. A MINIMUM OF 14 DAY NOTICE IS REQUIRED.
2. SEE LANDSCAPE DESIGN SUBSET FOR FURTHER DETAIL.

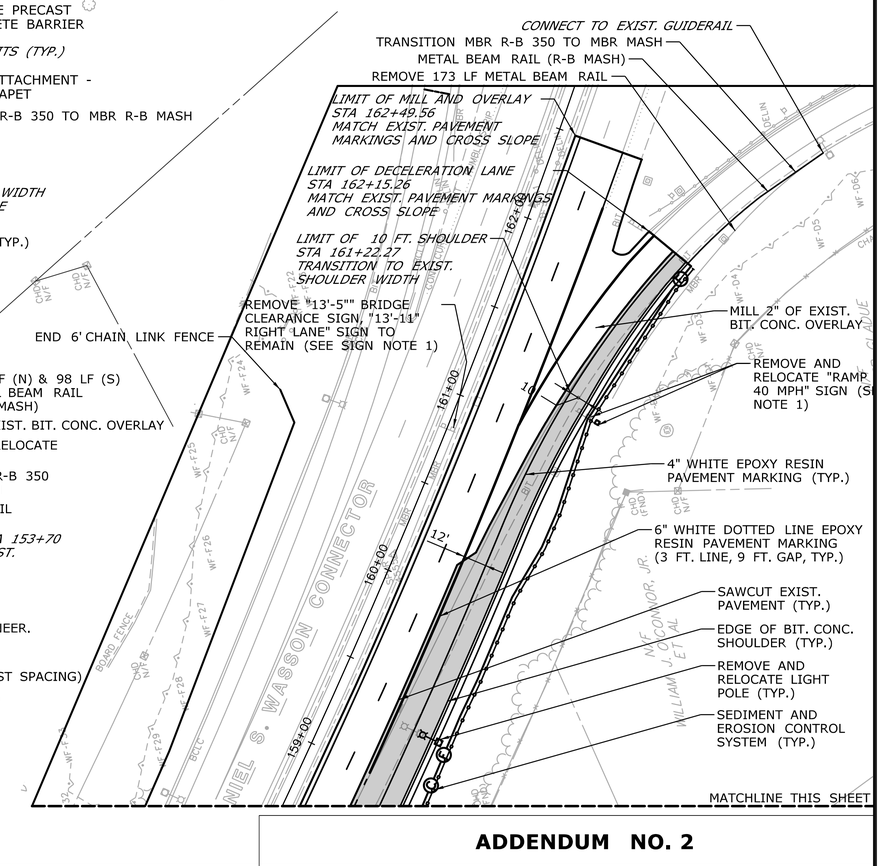

ADDENDUM NO. 2

REV.	DATE	REVISION DESCRIPTION	SHEET NO.
-	-	-	-
-	-	-	-
-	-	-	-
-	-	-	-
-	-	-	-
1	11/27/18	REVISED CUT LINE	03.05.A2

THE INFORMATION, INCLUDING ESTIMATED QUANTITIES OF WORK, SHOWN ON THESE SHEETS IS BASED ON LIMITED INVESTIGATIONS BY THE STATE AND IS IN NO WAY WARRANTED TO INDICATE THE CONDITIONS OF ACTUAL QUANTITIES OF WORK WHICH WILL BE REQUIRED.

Plotted Date: 11/28/2018

DESIGNER/DRAFTER: KG
CHECKED BY: AML
SCALE IN FEET 0 40 80
SCALE 1"=40'

STATE OF CONNECTICUT
DEPARTMENT OF TRANSPORTATION

Filename: ...\PLN-02 HIGHWAY PLAN 2d - SR 796_A2.dgn

SIGNATURE/BLOCK:
Stantec Consulting Services Inc.
55 Church Street
Suite 601
New Haven, CT 06510

PROJECT TITLE:
REPLACEMENT OF BRIDGE NO. 01446, WHEELERS FARMS ROAD OVER SR 796

TOWN: **MILFORD**

DRAWING TITLE: **ROADWAY PLAN SR 796**

PROJECT NO. 83-264
DRAWING NO. PLN-02
SHEET NO. 03.05.A2

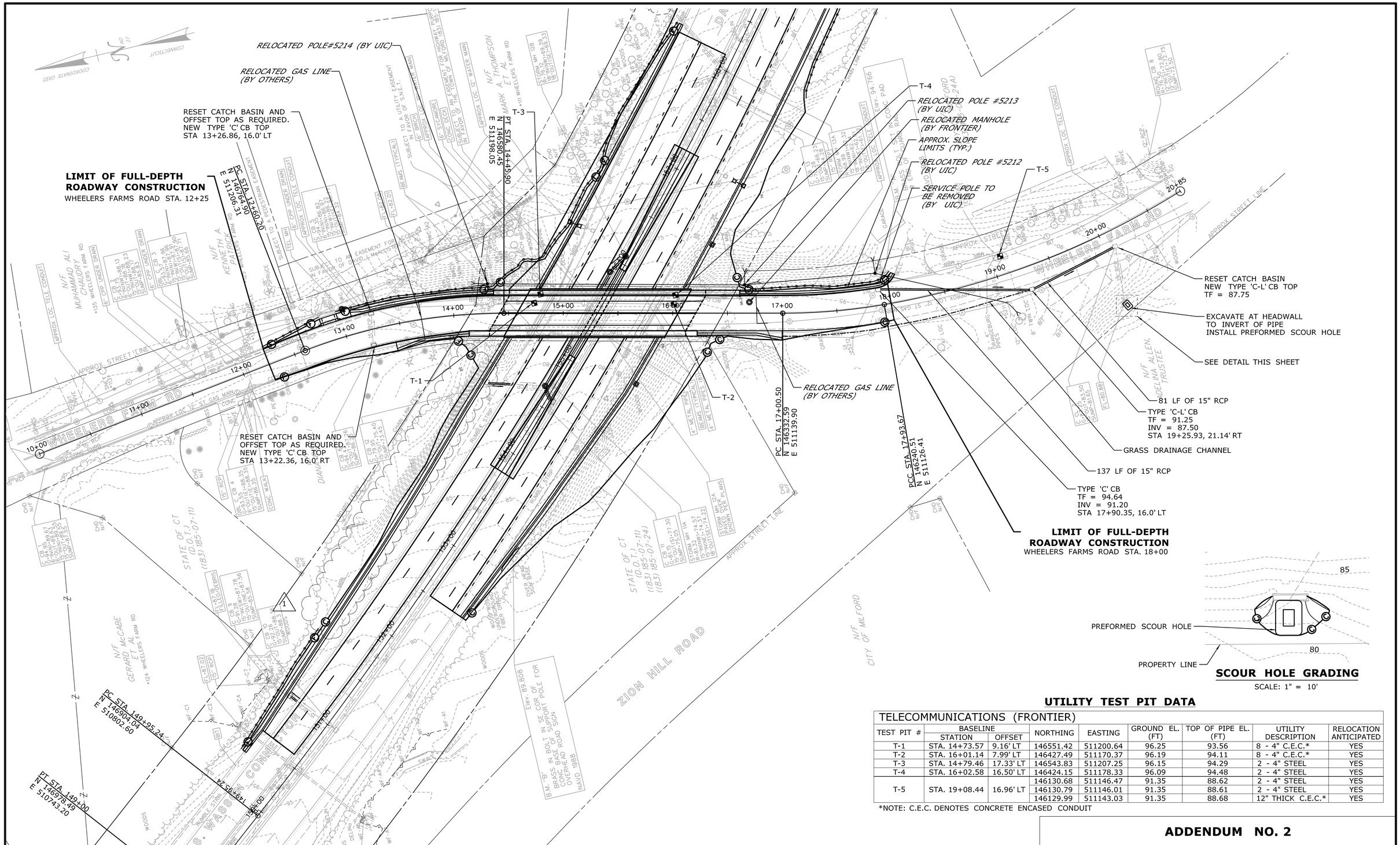

SCOUR HOLE GRADING

SCALE: 1" = 10'

UTILITY TEST PIT DATA

TELECOMMUNICATIONS (FRONTIER)								
TEST PIT #	BASELINE STATION	BASELINE OFFSET	NORTHING	EASTING	GROUND EL. (FT)	TOP OF PIPE EL. (FT)	UTILITY DESCRIPTION	RELOCATION ANTICIPATED
T-1	STA. 14+73.57	9.16' LT	146551.42	511200.64	96.25	93.56	8 - 4" C.E.C.*	YES
T-2	STA. 16+01.14	7.99' LT	146427.49	511170.37	96.19	94.11	8 - 4" C.E.C.*	YES
T-3	STA. 14+79.46	17.33' LT	146543.83	511207.25	96.15	94.29	2 - 4" STEEL	YES
T-4	STA. 16+02.58	16.50' LT	146424.15	511178.33	96.09	94.48	2 - 4" STEEL	YES
T-5	STA. 19+08.44	16.96' LT	146130.68	511146.47	91.35	88.62	2 - 4" STEEL	YES
			146130.79	511146.01	91.35	88.61	2 - 4" STEEL	YES
			146129.99	511143.03	91.35	88.68	12" THICK C.E.C.*	YES

*NOTE: C.E.C. DENOTES CONCRETE ENCASED CONDUIT

ADDENDUM NO. 2

REV.	DATE	REVISION DESCRIPTION	SHEET NO.
-	-	-	-
-	-	-	-
-	-	-	-
-	-	-	-
-	-	-	-
1	11/27/18	REVISED CUT LINE	03.06.A2

THE INFORMATION, INCLUDING ESTIMATED QUANTITIES OF WORK, SHOWN ON THESE SHEETS IS BASED ON LIMITED INVESTIGATIONS BY THE STATE AND IS IN NO WAY WARRANTED TO INDICATE THE CONDITIONS OF ACTUAL QUANTITIES OF WORK WHICH WILL BE REQUIRED.

Plotted Date: 11/28/2018

DESIGNER/DRAFTER: KG
CHECKED BY: AML
SCALE IN FEET 0 40 80
SCALE 1"=40'

STATE OF CONNECTICUT
DEPARTMENT OF TRANSPORTATION

Filename: ...\PLN-03 UTILITY PLAN 2d - WFR_A2.dgn

SIGNATURE/BLOCK:
Stantec Consulting Services Inc.
55 Church Street
Suite 601
New Haven, CT 06510

PROJECT TITLE:
REPLACEMENT OF BRIDGE NO. 01446, WHEELERS FARMS ROAD OVER SR 796

TOWN: **MILFORD**

DRAWING TITLE: **UTILITY PLAN WHEELERS FARMS ROAD**

PROJECT NO. **83-264**
DRAWING NO. **PLN-03**
SHEET NO. **03.06.A2**

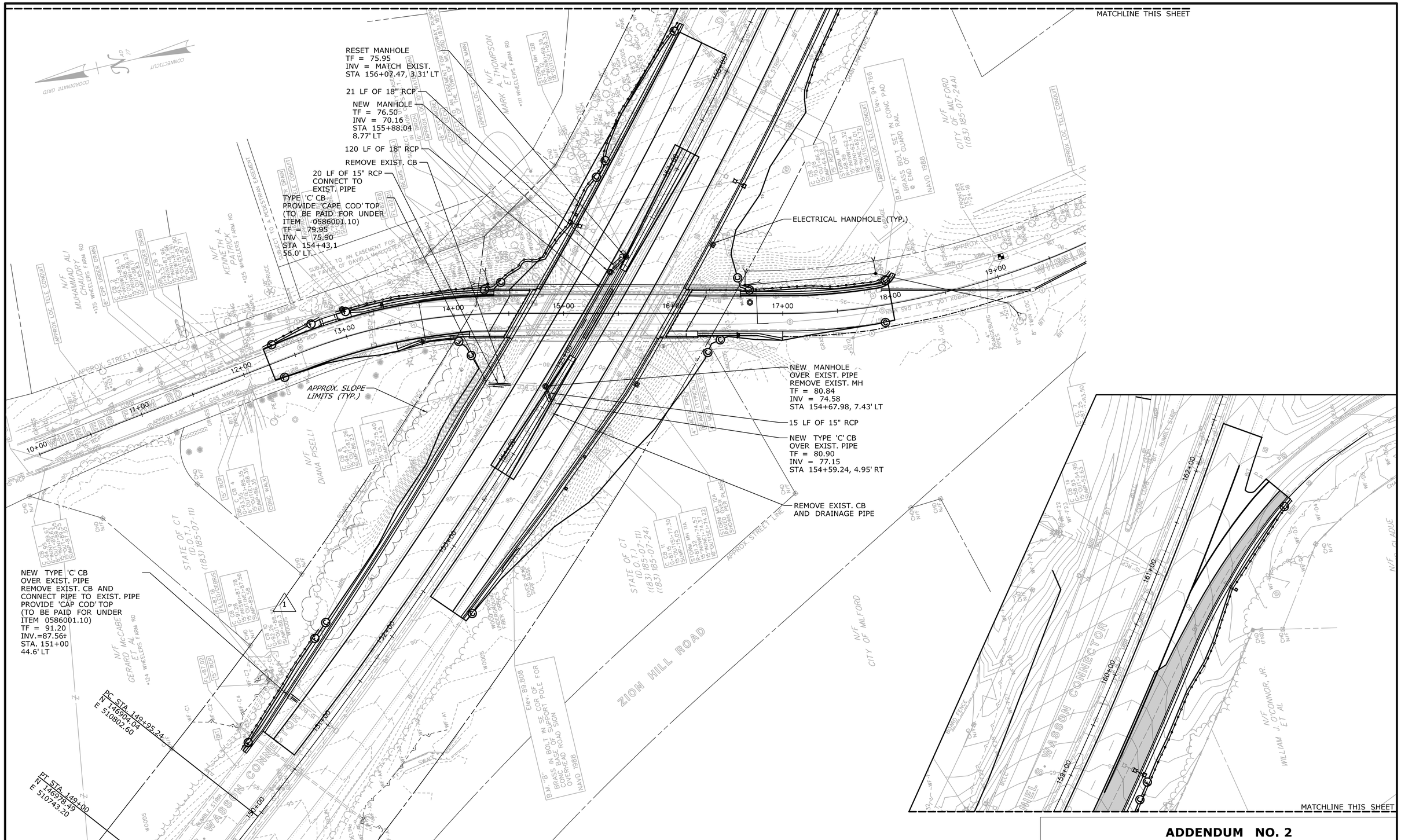

ADDENDUM NO. 2

REV.	DATE	REVISION DESCRIPTION	SHEET NO.
-	-	-	-
-	-	-	-
-	-	-	-
-	-	-	-
-	-	-	-
1	11/27/18	REVISED CUT LINE	03.07.A2

THE INFORMATION, INCLUDING ESTIMATED QUANTITIES OF WORK, SHOWN ON THESE SHEETS IS BASED ON LIMITED INVESTIGATIONS BY THE STATE AND IS IN NO WAY WARRANTED TO INDICATE THE CONDITIONS OF ACTUAL QUANTITIES OF WORK WHICH WILL BE REQUIRED.

Plotted Date: 11/28/2018

DESIGNER/DRAFTER: **KG**

CHECKED BY: **AML**

SCALE IN FEET 0 40 80

SCALE 1"=40'

STATE OF CONNECTICUT
DEPARTMENT OF TRANSPORTATION

Filename: ...\PLN-04 UTILITY PLAN 2d - SR 796_A2.dgn

SIGNATURE/BLOCK:

Stantec Consulting Services Inc.
55 Church Street
Suite 601
New Haven, CT 06510

PROJECT TITLE:

REPLACEMENT OF BRIDGE NO. 01446, WHEELERS FARMS ROAD OVER SR 796

TOWN: **MILFORD**

DRAWING TITLE: **UTILITY PLAN SR 796**

PROJECT NO. **83-264**

DRAWING NO. **PLN-04**

SHEET NO. **03.07.A2**

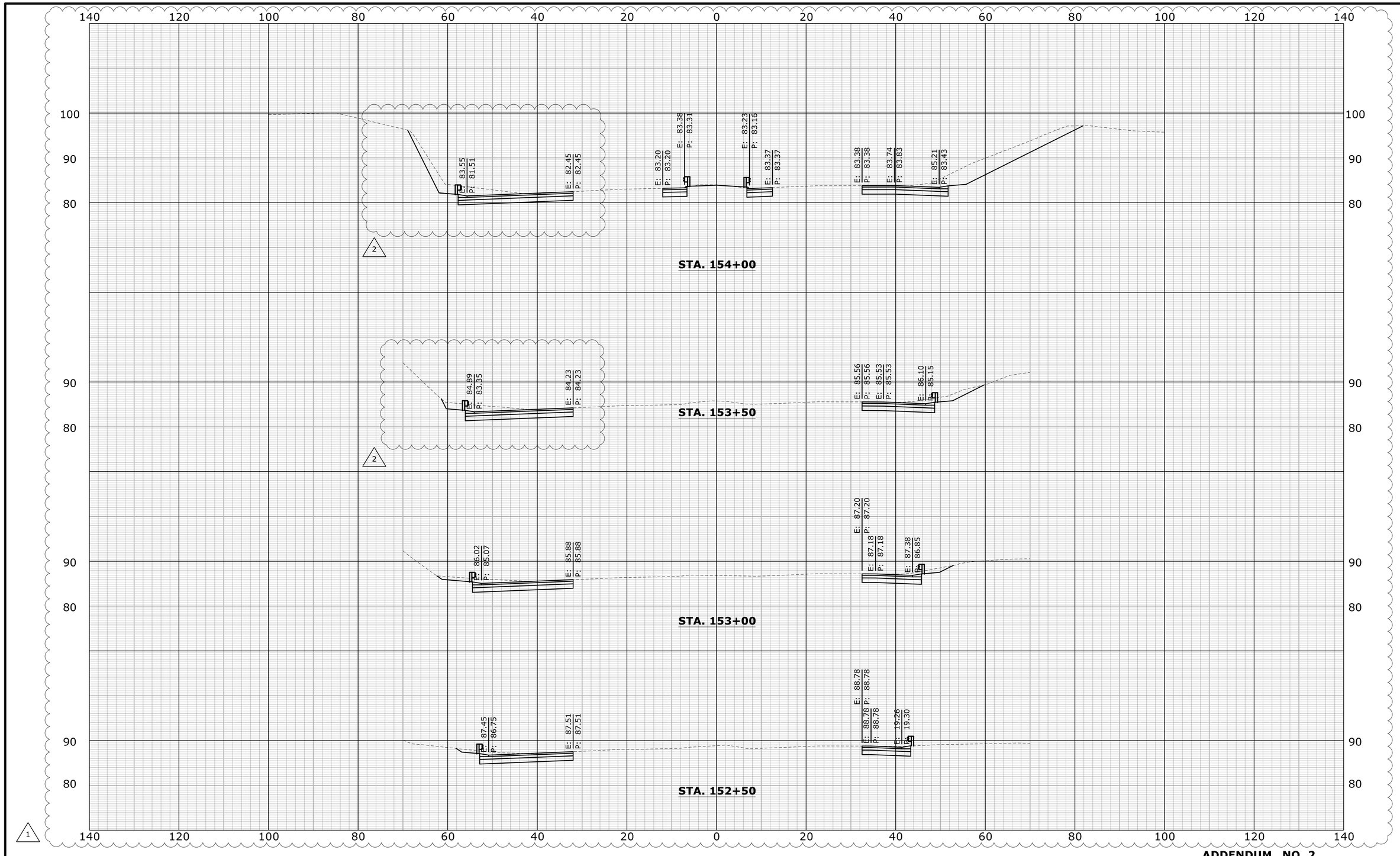

ADDENDUM NO. 2

REV.	DATE	REVISION DESCRIPTION	SHEET NO.
-	-	-	-
-	-	-	-
-	-	-	-
-	-	-	-
2	11/27/18	REVISED CROSS SECTION	03.17.A2
1	11/15/18	REVISED CROSS SECTION SCALE	03.17.A1

THE INFORMATION, INCLUDING ESTIMATED QUANTITIES OF WORK, SHOWN ON THESE SHEETS IS BASED ON LIMITED INVESTIGATIONS BY THE STATE AND IS IN NO WAY WARRANTED TO INDICATE THE CONDITIONS OF ACTUAL QUANTITIES OF WORK WHICH WILL BE REQUIRED.

Plotted Date: 11/28/2018

DESIGNER/DRAFTER: **KG**

CHECKED BY: **JE**

SCALE IN FEET 0 10 20

SCALE 1" = 10'

STATE OF CONNECTICUT
DEPARTMENT OF TRANSPORTATION

Filename: ...\XSC-08_083-0264 - SR 796_10scale_A2.dgn

SIGNATURE/BLOCK:

Stantec Consulting Services Inc.
55 Church Street
Suite 601
New Haven, CT 06510

PROJECT TITLE:

REPLACEMENT OF BRIDGE NO. 01446, WHEELERS FARMS ROAD OVER SR 796

TOWN: **MILFORD**

DRAWING TITLE: **CROSS SECTIONS SR 796**

PROJECT NO. **83-264**

DRAWING NO. **XSC-08**

SHEET NO. **03.17.A2**

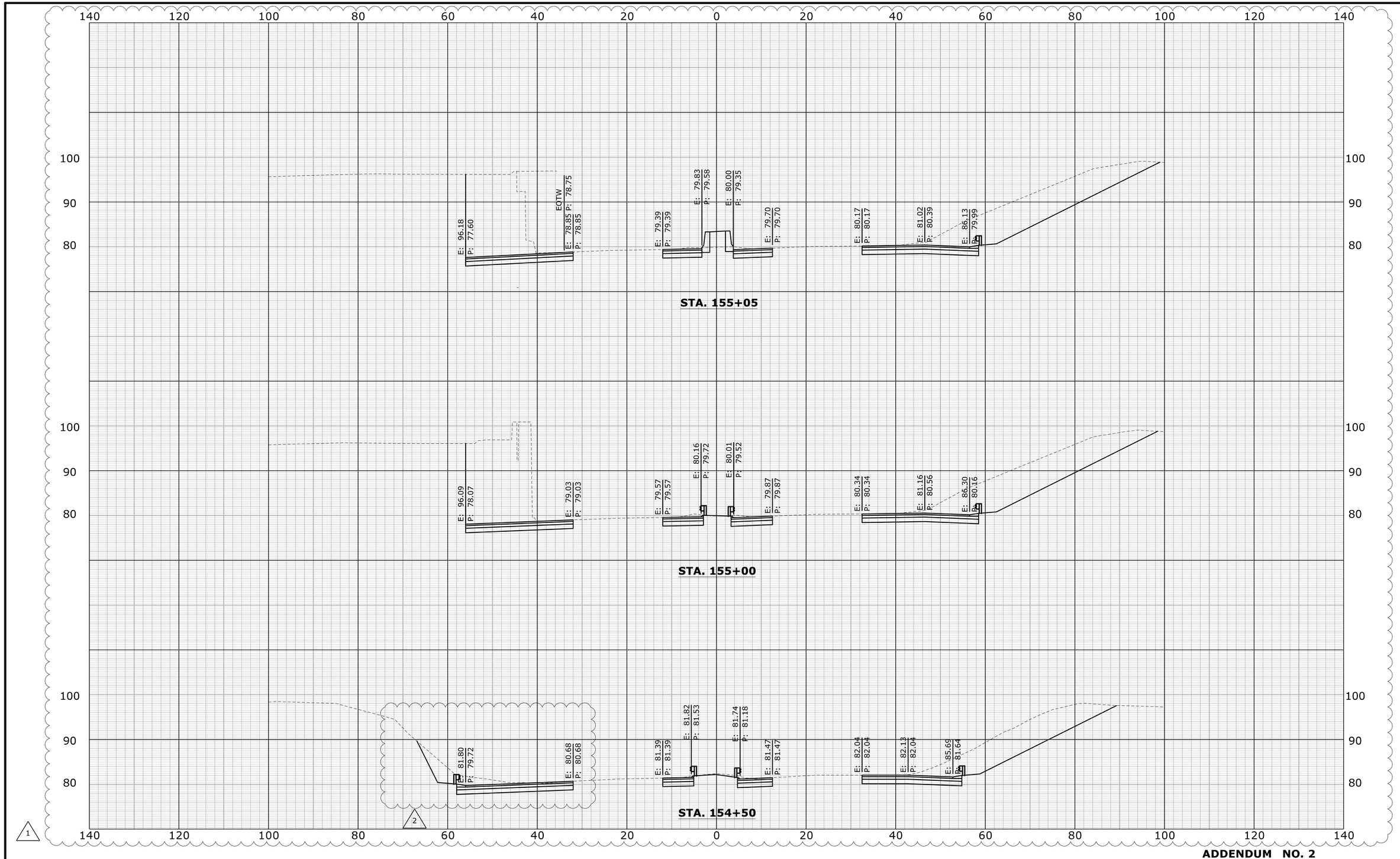

ADDENDUM NO. 2

REV.	DATE	REVISION DESCRIPTION	SHEET NO.
-	-	-	-
-	-	-	-
-	-	-	-
-	-	-	-
2	11/27/18	REVISED CROSS SECTION	03.18.A2
1	11/15/18	REVISED CROSS SECTION SCALE	03.18.A1

THE INFORMATION, INCLUDING ESTIMATED QUANTITIES OF WORK, SHOWN ON THESE SHEETS IS BASED ON LIMITED INVESTIGATIONS BY THE STATE AND IS IN NO WAY WARRANTED TO INDICATE THE CONDITIONS OF ACTUAL QUANTITIES OF WORK WHICH WILL BE REQUIRED.

Plotted Date: 11/28/2018

DESIGNER/DRAFTER: **KG**

CHECKED BY: **JE**

SCALE IN FEET

0 10 20

SCALE 1" = 10'

STATE OF CONNECTICUT
DEPARTMENT OF TRANSPORTATION

Filename: ...\XSC-09_083-0264 - SR 796_10scale_A2.dgn

SIGNATURE/ BLOCK:

Stantec Consulting Services Inc.
55 Church Street
Suite 601
New Haven, CT 06510

PROJECT TITLE:

REPLACEMENT OF BRIDGE NO. 01446, WHEELERS FARMS ROAD OVER SR 796

TOWN: **MILFORD**

DRAWING TITLE: **CROSS SECTIONS SR 796**

PROJECT NO. **83-264**

DRAWING NO. **XSC-09**

SHEET NO. **03.18.A2**