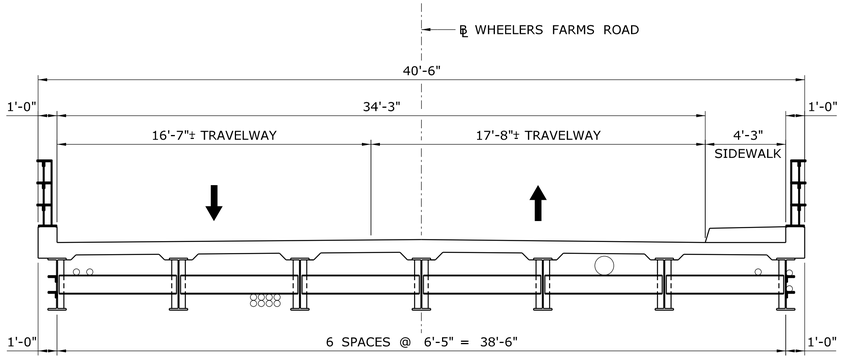

EXISTING CONDITION

SCALE: ¼" = 1'-0"

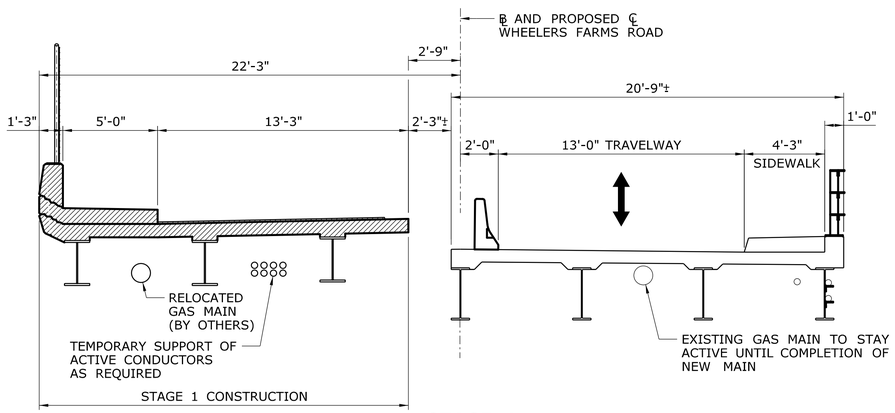

STAGE 1

SCALE: ¼" = 1'-0"

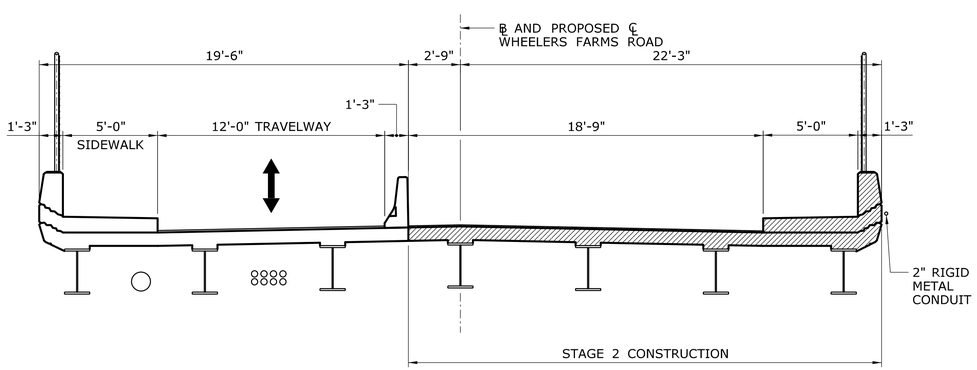

STAGE 2

SCALE: ¼" = 1'-0"

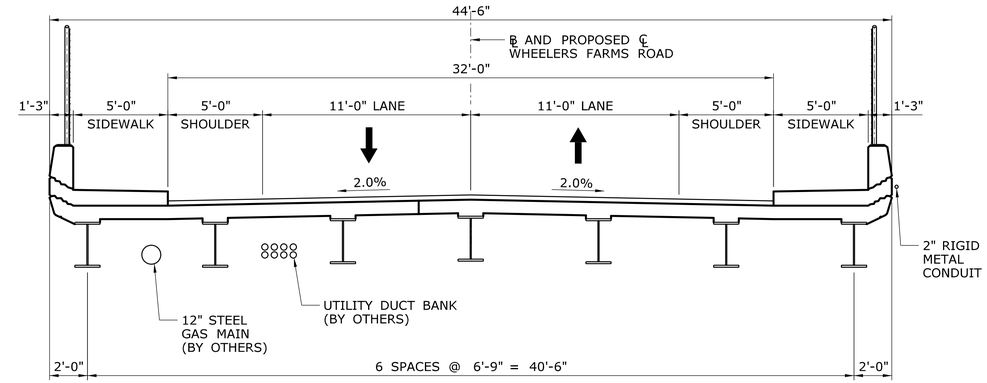

FINAL CONDITION

SCALE: ¼" = 1'-0"

SUGGESTED SEQUENCE OF CONSTRUCTION:

STAGE 1
1. INSTALL TEMPORARY PRECAST CONCRETE HALF-SECTION BARRIER CURB (STRUCTURE).
2. REMOVE PORTION OF EXISTING SUPERSTRUCTURE AS SHOWN.
3. INSTALL TEMPORARY EARTH RETAINING SYSTEM AND TEMPORARY SUPPORT SYSTEM.
4. REMOVE PORTION OF EXISTING SUBSTRUCTURE.
5. CONSTRUCT PORTION OF NEW SUBSTRUCTURE.
6. REMOVE TEMPORARY EARTH RETAINING SYSTEM.
7. CONSTRUCT PORTION OF NEW SUPERSTRUCTURE.
8. INSTALL PROTECTIVE FENCE.
9. PLACE 1.25" HMA S0.375 ON MEMBRANE WATERPROOFING.
10. NEW GAS MAIN TO BE INSTALLED AND PLACED IN SERVICE (BY OTHERS).
11. UTILITY DUCT BANK STRUCTURE TO BE INSTALLED (BY OTHERS).

STAGE 2
1. RELOCATE OVERHEAD UTILITIES.
2. REMOVE AND RELOCATE TEMPORARY PRECAST CONCRETE HALF-SECTION BARRIER CURB (STRUCTURE).
3. REMOVE FINAL PORTION OF EXISTING STRUCTURE.
4. INSTALL TEMPORARY EARTH RETAINING SYSTEM.
5. CONSTRUCT PORTION OF NEW SUBSTRUCTURE.
6. REMOVE TEMPORARY EARTH RETAINING SYSTEM.
7. CONSTRUCT FINAL PORTION OF NEW SUPERSTRUCTURE.
8. INSTALL PROTECTIVE FENCE.
9. PLACE 1" HMA S0.25 ON MEMBRANE WATERPROOFING.

1

FINAL STAGE
1. REMOVE TEMPORARY PRECAST CONCRETE HALF-SECTION BARRIER CURB (STRUCTURE).
2. PLACE HMA S0.5 WITH TACK COAT ACROSS FULL WIDTH OF BRIDGE TO MAKE 3" TOTAL PAVEMENT THICKNESS
3. ESTABLISH FINAL TRAFFIC PATTERNS.

NOTES:

1. SEE TRAFFIC SUBSET FOR ADDITIONAL MAINTENANCE AND PROTECTION OF TRAFFIC DETAILS AND REQUIREMENTS
2. DURING REMOVAL OF THE EXISTING SUPERSTRUCTURE, THE CONTRACTOR SHALL TAKE ADEQUATE MEASURES TO PREVENT ANY DEBRIS FROM ENTERING INTO THE ADJACENT ROADWAY OR DROPPING INTO AREAS BELOW THE STRUCTURE.
3. THE CONTRACTOR SHALL INSPECT THE EXISTING BRIDGE PERIODICALLY DURING THE STAGE CONSTRUCTION AND IMMEDIATELY NOTIFY THE ENGINEER OF ANY DEFICIENCIES NOTED.

Andrew Lessard
2018.11.30
10:11:07-05'00'

ADDENDUM NO. 2

REV.	DATE	REVISION DESCRIPTION	SHEET NO.
-	-	-	-
-	-	-	-
-	-	-	-
-	-	-	-
-	-	-	-
1	11/21/18	REVISED FINAL STAGE PAVEMENT STEP	04.09.A2

THE INFORMATION, INCLUDING ESTIMATED QUANTITIES OF WORK, SHOWN ON THESE SHEETS IS BASED ON LIMITED INVESTIGATIONS BY THE STATE AND IS IN NO WAY WARRANTED TO INDICATE THE CONDITIONS OF ACTUAL QUANTITIES OF WORK WHICH WILL BE REQUIRED.

Plotted Date: 11/30/2018

DESIGNER/DRAFTER: JJF
CHECKED BY: AML
SCALE AS NOTED

STATE OF CONNECTICUT
DEPARTMENT OF TRANSPORTATION

Filename: ...\S-09 CONSTRUCTION STAGING - 1_A2.dgn

SIGNATURE/BLOCK:

Stantec Consulting Services Inc.
55 Church Street
Suite 601
New Haven, CT 06510

PROJECT TITLE:
REPLACEMENT OF BRIDGE NO. 01446, WHEELERS FARMS ROAD OVER SR 796

TOWN: **MILFORD**

DRAWING TITLE: **CONSTRUCTION STAGING - 1**

PROJECT NO. **83-264**
DRAWING NO. **S-09**
SHEET NO. **04.09.A2**

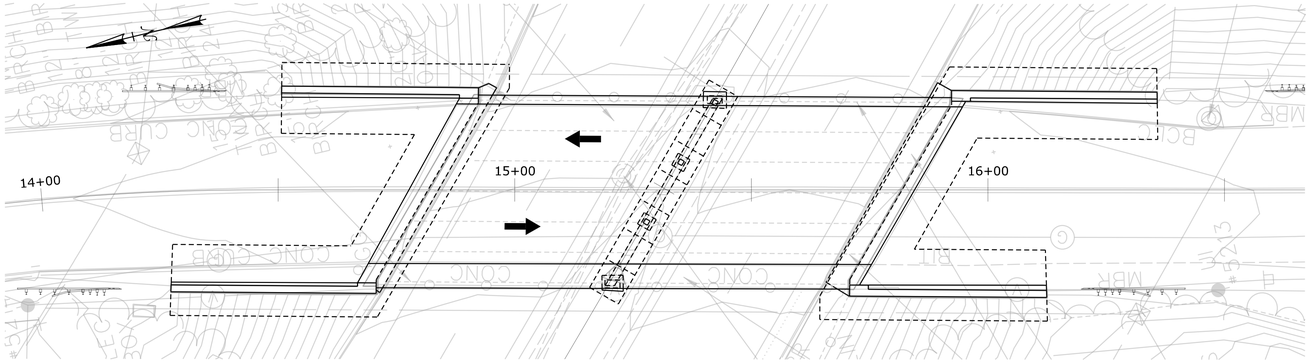

NOTES:

1. SEE TRAFFIC SUBSET FOR ADDITIONAL MAINTENANCE AND PROTECTION OF TRAFFIC DETAILS AND REQUIREMENTS.
2. DURING REMOVAL OF THE EXISTING SUPERSTRUCTURE, THE CONTRACTOR SHALL TAKE ADEQUATE MEASURES TO PREVENT ANY DEBRIS FROM ENTERING INTO THE ADJACENT ROADWAY OR DROPPING INTO AREAS BELOW THE STRUCTURE.
3. SEE DRAWINGS S-09 AND S-11 FOR ADDITIONAL STAGING DETAILS.

PLAN - EXISTING

SCALE: 1/16" = 1'-0"

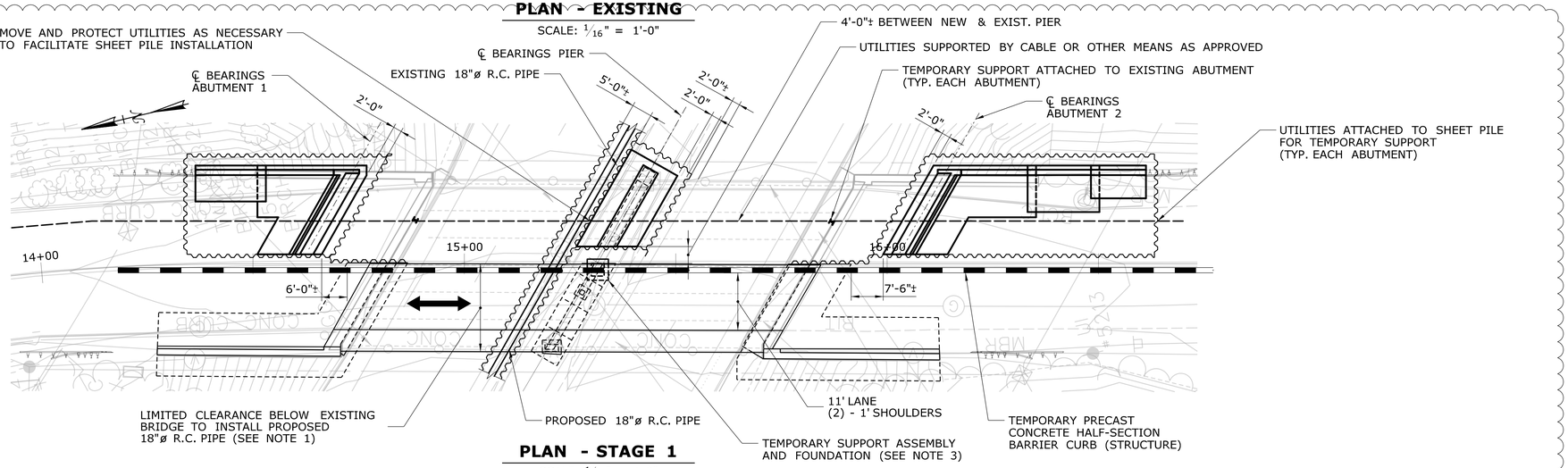

PLAN - STAGE 1

SCALE: 1/16" = 1-0"

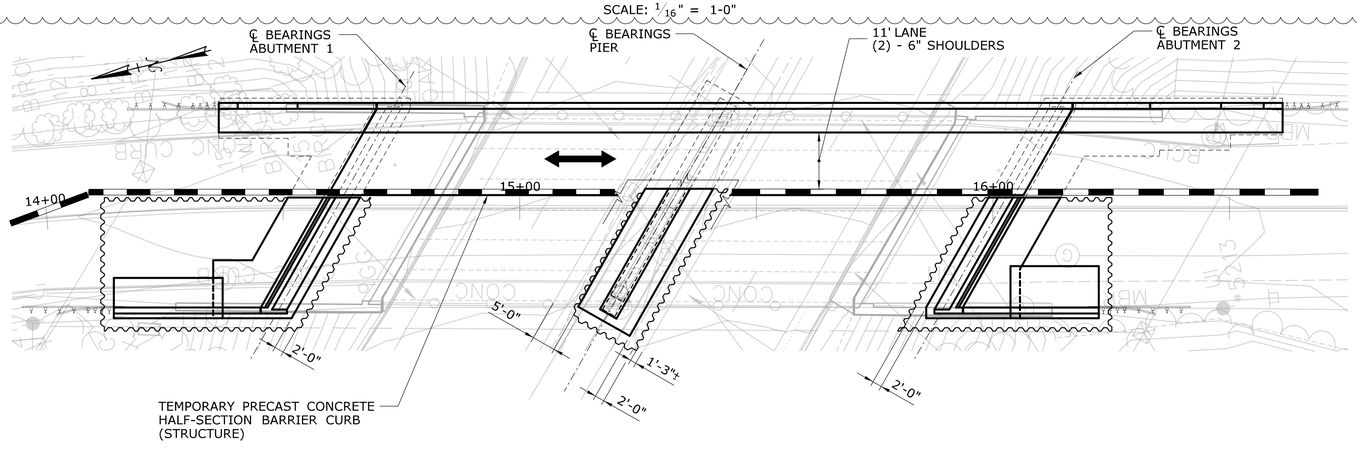

PLAN - STAGE 2

SCALE: 1/16" = 1'-0"

1

ADDENDUM NO. 2

REV.	DATE	REVISION DESCRIPTION	SHEET NO.
-	-	-	-
-	-	-	-
-	-	-	-
-	-	-	-
-	-	-	-
1	11/21/18	REVISED UTILITY SUPPORT	04.10.A2

THE INFORMATION, INCLUDING ESTIMATED QUANTITIES OF WORK, SHOWN ON THESE SHEETS IS BASED ON LIMITED INVESTIGATIONS BY THE STATE AND IS IN NO WAY WARRANTED TO INDICATE THE CONDITIONS OF ACTUAL QUANTITIES OF WORK WHICH WILL BE REQUIRED.

Plotted Date: 11/30/2018

DESIGNER/DRAFTER: JJF
CHECKED BY: AML
SCALE AS NOTED

STATE OF CONNECTICUT
DEPARTMENT OF TRANSPORTATION

Filename: ...\S-10 CONSTRUCTION STAGING - 2.A2.dgn

SIGNATURE/BLOCK:
Stantec Consulting Services Inc.
55 Church Street
Suite 601
New Haven, CT 06510

PROJECT TITLE:
REPLACEMENT OF BRIDGE NO. 01446, WHEELERS FARMS ROAD OVER SR 796

TOWN: **MILFORD**

DRAWING TITLE: **CONSTRUCTION STAGING - 2**

PROJECT NO. 83-264
DRAWING NO. S-10
SHEET NO. 04.10.A2

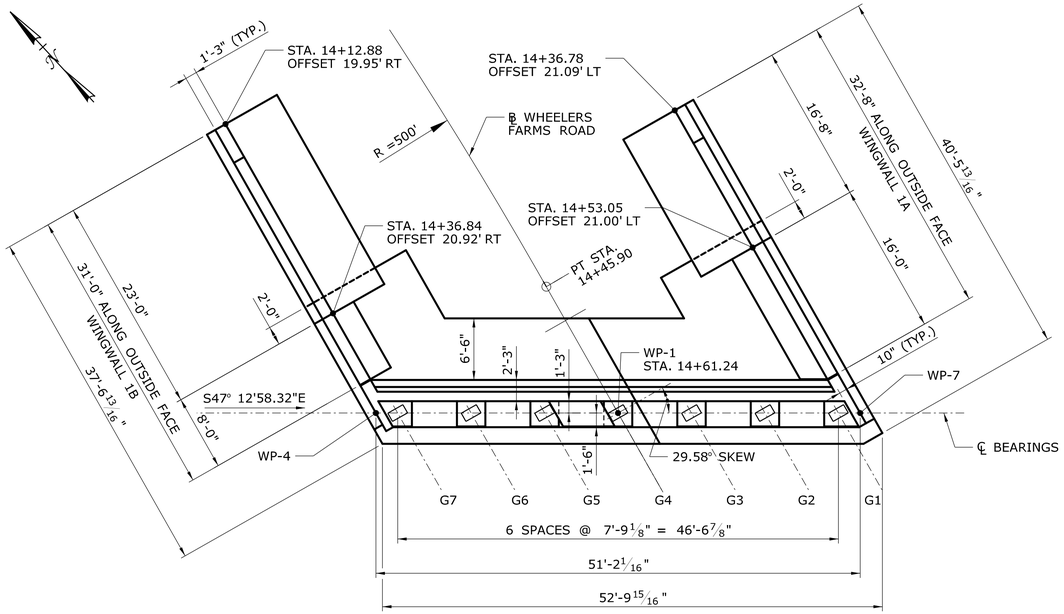

ABUTMENT 1 - PLAN

SCALE: 1/8" = 1'-0"

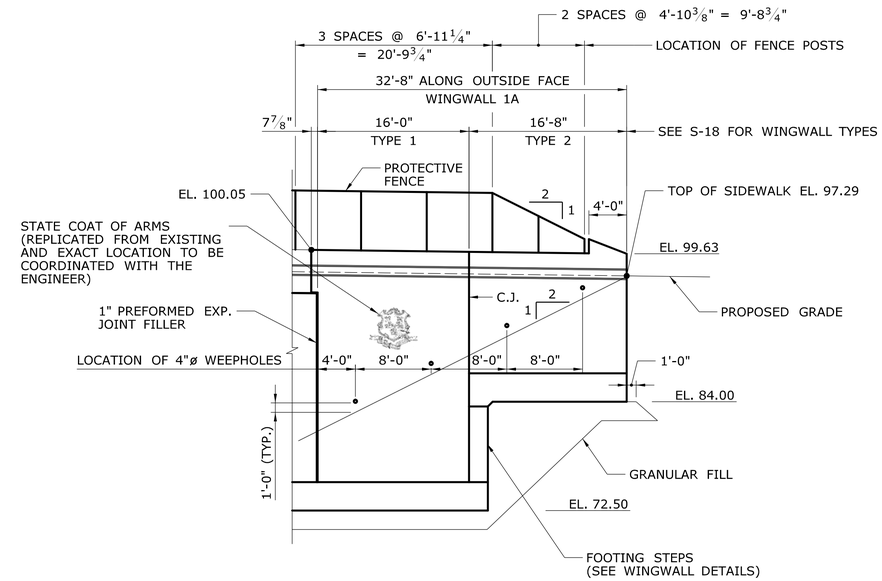

WINGWALL 1A - DEVELOPED ELEVATION

SCALE: 1/8" = 1'-0"

PEDESTAL ELEVATIONS	
LOCATION	ELEVATION
G1	93.30
G2	93.30
G3	93.39
G4	93.47
G5	93.29
G6	93.10
G7	93.00

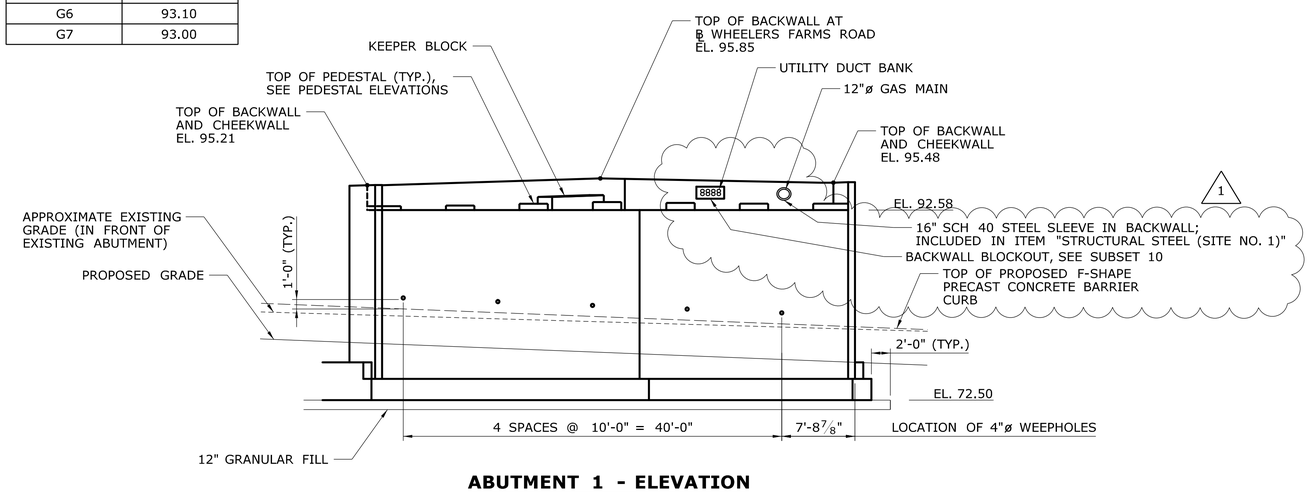

ABUTMENT 1 - ELEVATION

SCALE: 1/8" = 1'-0"

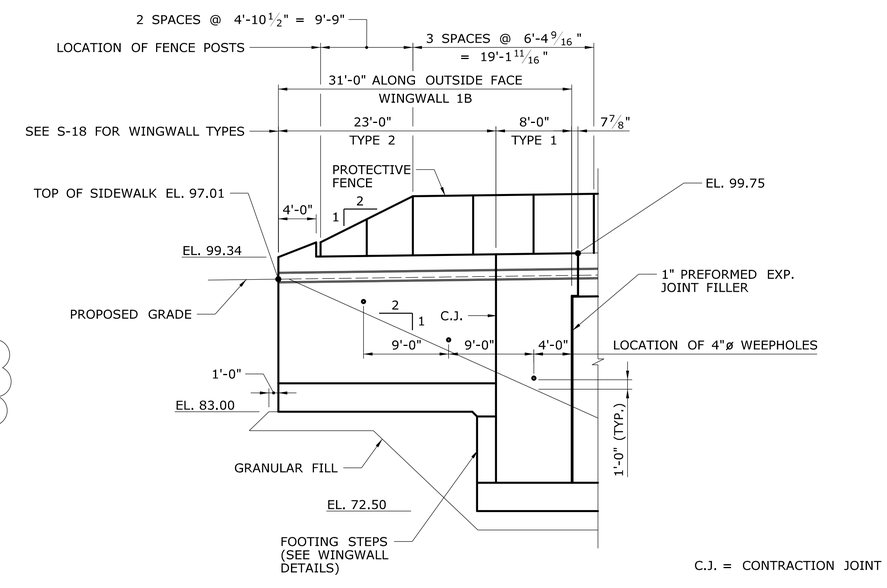

C.J. = CONTRACTION JOINT

WINGWALL 1B - DEVELOPED ELEVATION

SCALE: 1/8" = 1'-0"

MAXIMUM DESIGN FOUNDATION PRESSURE = 4.1 TSF (STRENGTH I)
(AT ABUTMENT) 3.0 TSF (SERVICE II)

ADDENDUM NO. 2

REV.	DATE	REVISION DESCRIPTION	SHEET NO.
-	-	-	-
-	-	-	-
-	-	-	-
-	-	-	-
-	-	-	-
1	11/21/18	ADDED BACKWALL BLOCKOUT	04.14.A2

THE INFORMATION, INCLUDING ESTIMATED QUANTITIES OF WORK, SHOWN ON THESE SHEETS IS BASED ON LIMITED INVESTIGATIONS BY THE STATE AND IS IN NO WAY WARRANTED TO INDICATE THE CONDITIONS OF ACTUAL QUANTITIES OF WORK WHICH WILL BE REQUIRED.

Plotted Date: 11/30/2018

DESIGNER/DRAFTER: JJF
CHECKED BY: AML
SCALE AS NOTED

STATE OF CONNECTICUT
DEPARTMENT OF TRANSPORTATION

Filename: ...\S-14 ABUTMENT 1 & WINGWALLS 1A & 1B_A2.dgn

SIGNATURE/BLOCK:
Stantec Consulting Services Inc.
55 Church Street
Suite 601
New Haven, CT 06510

PROJECT TITLE:
REPLACEMENT OF BRIDGE NO. 01446, WHEELERS FARMS ROAD OVER SR 796

TOWN: **MILFORD**

DRAWING TITLE: **ABUTMENT 1 & WINGWALLS 1A & 1B**

PROJECT NO. **83-264**
DRAWING NO. **S-14**
SHEET NO. **04.14.A2**

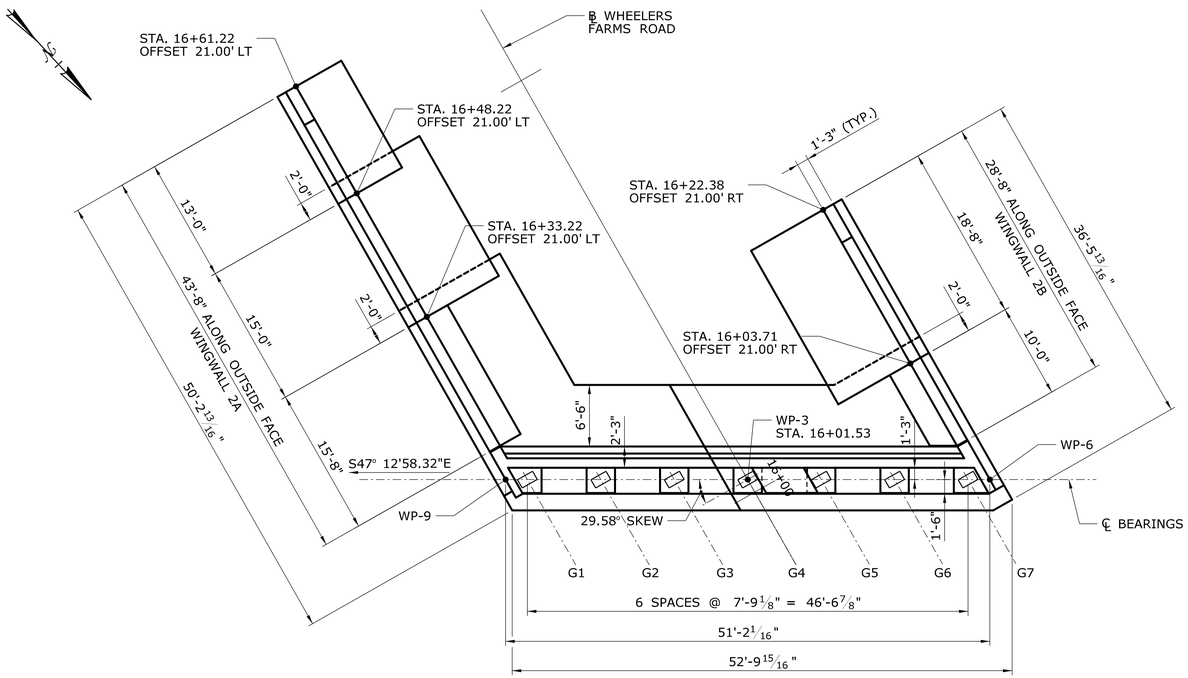

ABUTMENT 2 - PLAN

SCALE: 1/8" = 1'-0"

PEDESTAL ELEVATIONS	
LOCATION	ELEVATION
G1	93.08
G2	93.18
G3	93.37
G4	93.55
G5	93.46
G6	93.38
G7	93.38

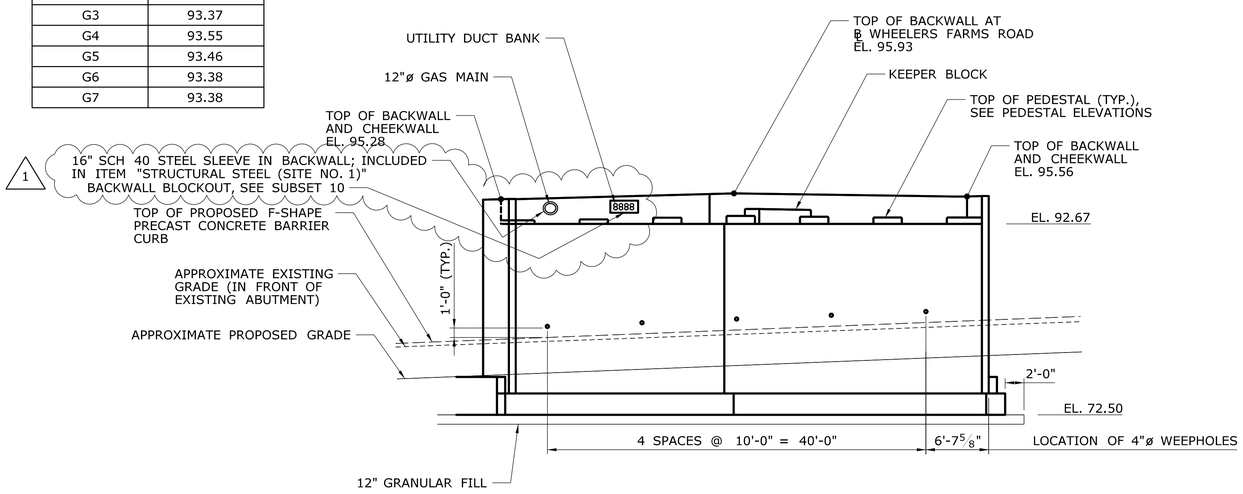

ABUTMENT 2 - ELEVATION

SCALE: 1/8" = 1'-0"

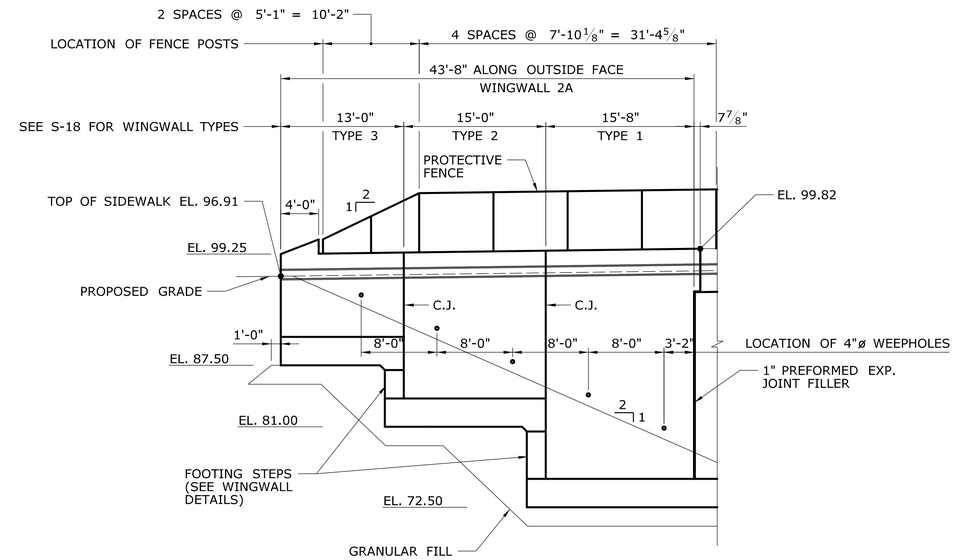

C.J. = CONTRACTION JOINT

WINGWALL 2A - DEVELOPED ELEVATION

SCALE: 1/8" = 1'-0"

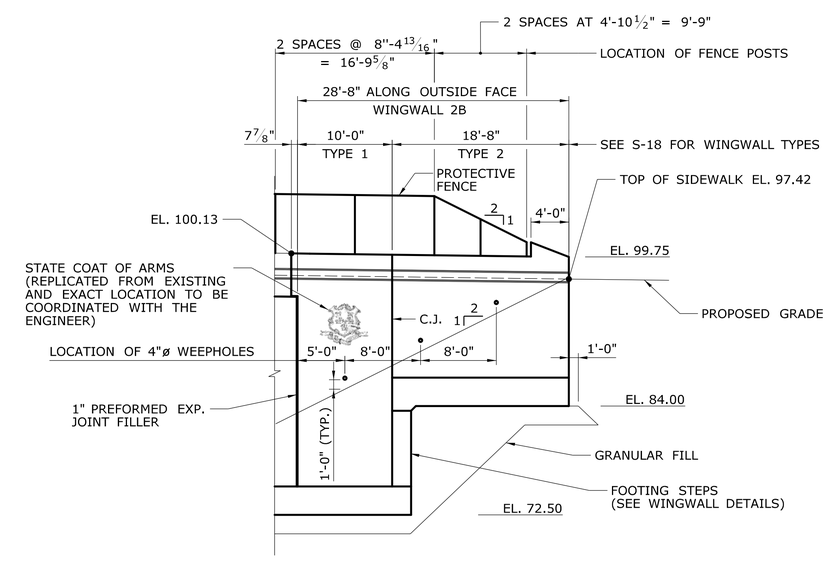

C.J. = CONTRACTION JOINT

WINGWALL 2B - DEVELOPED ELEVATION

SCALE: 1/8" = 1'-0"

MAXIMUM DESIGN FOUNDATION PRESSURE = 4.1 TSF (STRENGTH I)
(AT ABUTMENT) 3.0 TSF (SERVICE II)

ADDENDUM NO. 2

REV.	DATE	REVISION DESCRIPTION	SHEET NO.
-	-	-	-
-	-	-	-
-	-	-	-
-	-	-	-
-	-	-	-
1	11/21/18	ADDED BACKWALL BLOCKOUT	04.15.A2

THE INFORMATION, INCLUDING ESTIMATED QUANTITIES OF WORK, SHOWN ON THESE SHEETS IS BASED ON LIMITED INVESTIGATIONS BY THE STATE AND IS IN NO WAY WARRANTED TO INDICATE THE CONDITIONS OF ACTUAL QUANTITIES OF WORK WHICH WILL BE REQUIRED.

Plotted Date: 11/30/2018

DESIGNER/DRAFTER: JJF
CHECKED BY: AML
SCALE AS NOTED

STATE OF CONNECTICUT
DEPARTMENT OF TRANSPORTATION

Filename: ...\S-15 ABUTMENT 2 & WINGWALLS 2A & 2B_A2.dgn

SIGNATURE/BLOCK:
Stantec Consulting Services Inc.
55 Church Street
Suite 601
New Haven, CT 06510

PROJECT TITLE:
REPLACEMENT OF BRIDGE NO. 01446, WHEELERS FARMS ROAD OVER SR 796

TOWN: **MILFORD**

DRAWING TITLE: **ABUTMENT 2 & WINGWALLS 2A & 2B**

PROJECT NO. 83-264
DRAWING NO. S-15
SHEET NO. 04.15.A2

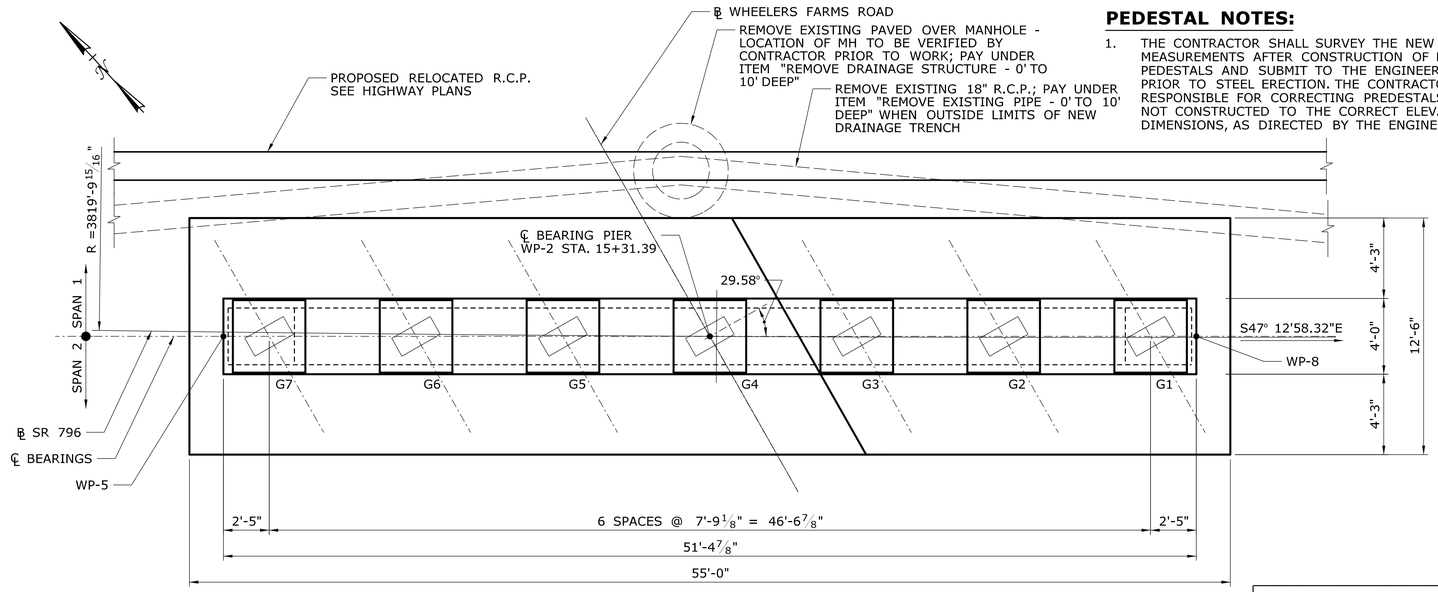

PIER - PLAN

SCALE: 1/4" = 1'-0"

PEDESTAL NOTES:

1. THE CONTRACTOR SHALL SURVEY THE NEW PEDESTAL MEASUREMENTS AFTER CONSTRUCTION OF NEW PEDESTALS AND SUBMIT TO THE ENGINEER FOR REVIEW PRIOR TO STEEL ERECTION. THE CONTRACTOR SHALL BE RESPONSIBLE FOR CORRECTING PREDESTALS THAT ARE NOT CONSTRUCTED TO THE CORRECT ELEVATION AND/OR DIMENSIONS, AS DIRECTED BY THE ENGINEER.

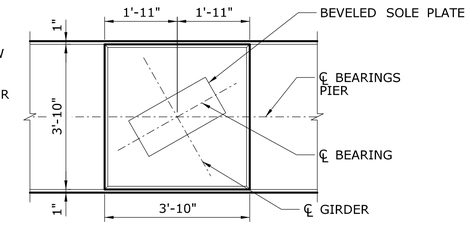

PLAN

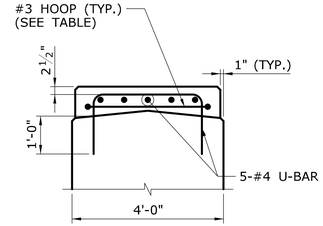

SECTION

PEDESTAL DETAILS

SCALE: 1/2" = 1'-0"

PEDESTAL ELEVATIONS	
LOCATION	ELEVATION
G1	93.66
G2	93.72
G3	93.85
G4	93.99
G5	93.85
G6	93.70
G7	93.64

PEDESTAL ELEVATIONS SHALL BE ADJUSTED BASED ON ACTUAL BEARING PROVIDED

PEDESTAL REFINFORCEMENT SCHEDULE	
PEDESTAL HEIGHT	NUMBER OF HOOPS
< 5"	0
5"-8"	1
8"-11"	2
11"-14"	3

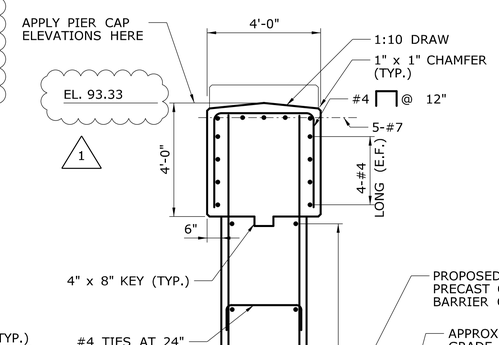

PIER - SECTION

SCALE: 3/8" = 1'-0"

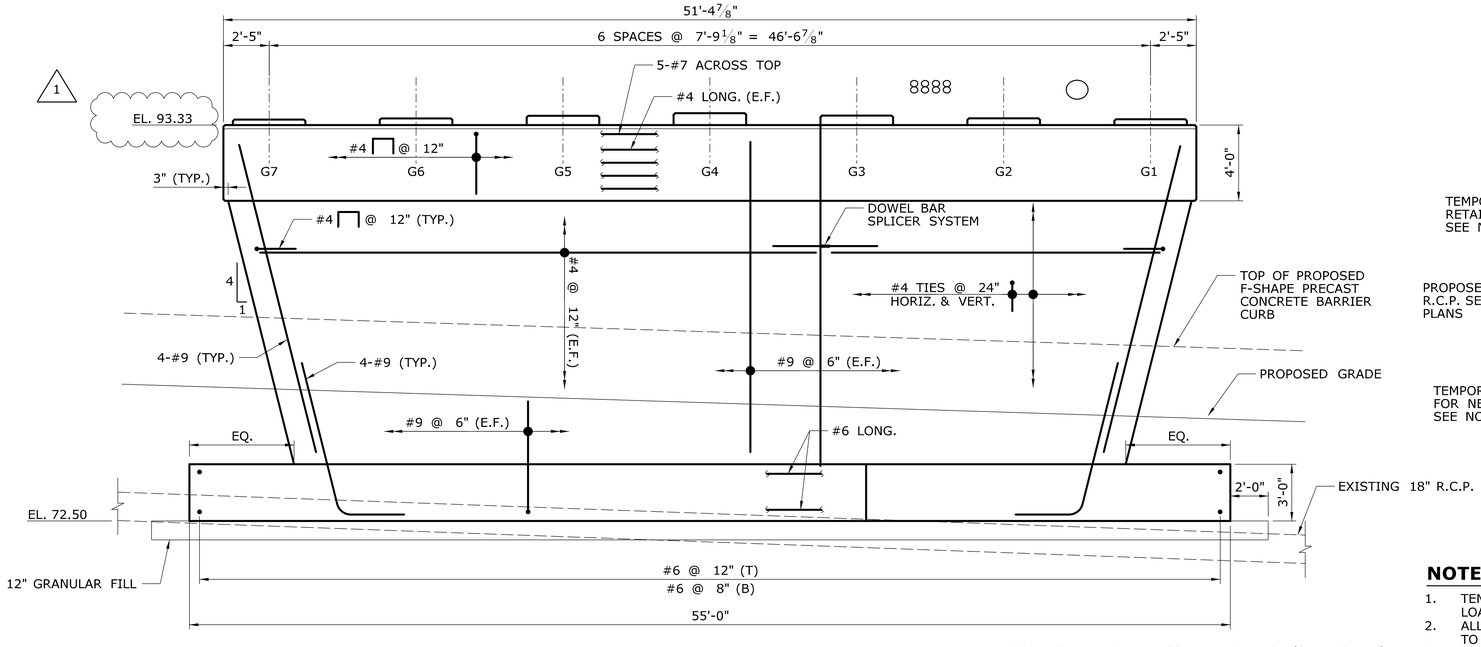

PIER - SOUTH ELEVATION

SCALE: 1/4" = 1'-0"

MAXIMUM DESIGN FOUNDATION PRESSURE = 2.7 TSF (STRENGTH I)
1.8 TSF (SERVICE I)

NOTES:

1. TEMPORARY EARTH RETAINING SYSTEM SHALL BE DESIGNED TO RESIST IMPACT LOADS FROM T.P.C.B.C. AS APPLICABLE.
2. ALL TEMPORARY EARTH RETAINING SYSTEMS SHALL BE DESIGNED AND INSTALLED TO ACCOMMODATE EXISTING AND PROPOSED DRAINAGE COMPONENTS.
3. THIS TEMPORARY EARTH RETAINING SYSTEM SHALL BE LEFT IN PLACE AND PAID FOR UNDER THE ITEM 'EARTH RETAINING SYSTEM LEFT IN PLACE'.

ADDENDUM NO. 2

REV.	DATE	REVISION DESCRIPTION	SHEET NO.
-	-	-	-
-	-	-	-
-	-	-	-
-	-	-	-
-	-	-	-
1	11/21/18	REVISED PEDESTAL AND PIER CAP ELEVATIONS	04.19.A2

THE INFORMATION, INCLUDING ESTIMATED QUANTITIES OF WORK, SHOWN ON THESE SHEETS IS BASED ON LIMITED INVESTIGATIONS BY THE STATE AND IS IN NO WAY WARRANTED TO INDICATE THE CONDITIONS OF ACTUAL QUANTITIES OF WORK WHICH WILL BE REQUIRED.

Plotted Date: 11/30/2018

DESIGNER/DRAFTER: JJF
CHECKED BY: AML
SCALE AS NOTED

STATE OF CONNECTICUT
DEPARTMENT OF TRANSPORTATION

Filename: ...\Struct_Bridge\S-19_PIER_A2.dgn

SIGNATURE/BLOCK:
Stantec Consulting Services Inc.
55 Church Street
Suite 601
New Haven, CT 06510

PROJECT TITLE:
REPLACEMENT OF BRIDGE NO. 01446, WHEELERS FARM ROAD OVER SR 796

TOWN: **MILFORD**

DRAWING TITLE: **PIER**

PROJECT NO. 83-264
DRAWING NO. S-19
SHEET NO. 04.19.A2

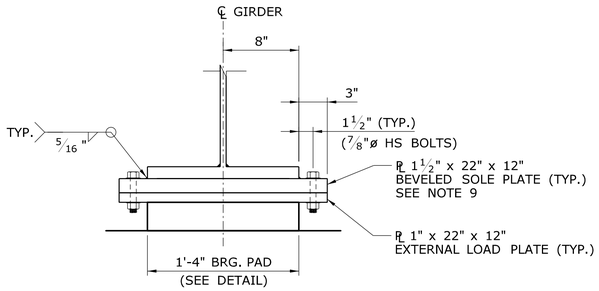

SECTION A-A

SCALE: 1½" = 1'-0"

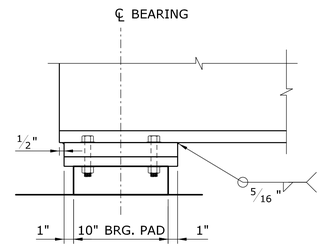

SECTION B-B

SCALE: 1½" = 1'-0"

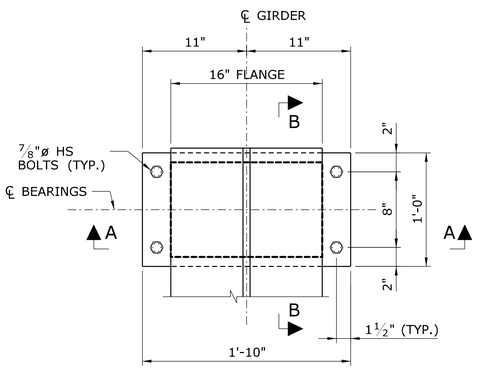

TYPICAL EXPANSION BEARING PLAN

SCALE: 1½" = 1'-0"

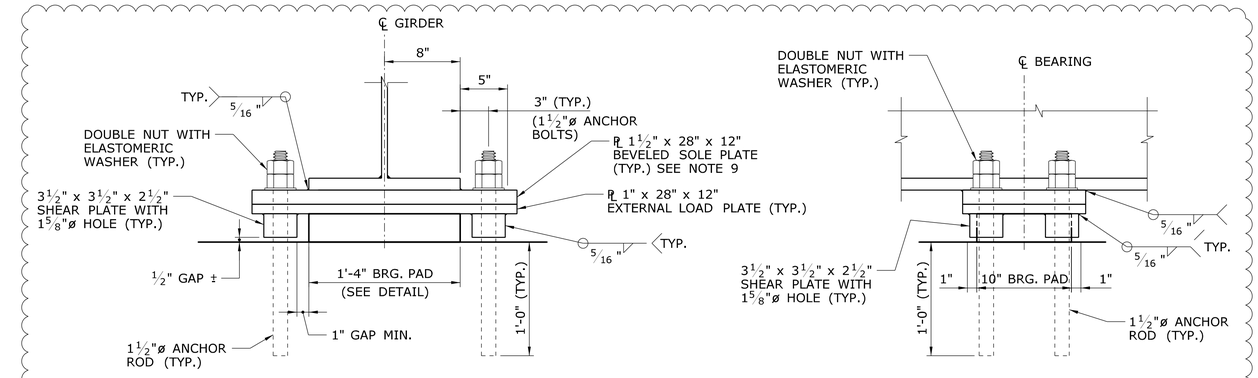

1

SECTION C-C

SCALE: 1½" = 1'-0"

SECTION D-D

SCALE: 1½" = 1'-0"

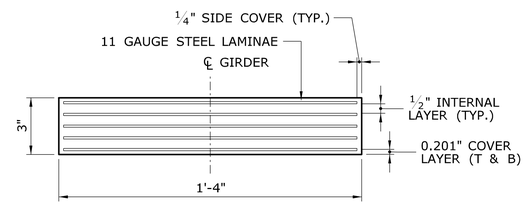

NOTE: REINFORCED ELASTOMERIC BEARING PAD SHALL BE SHOP VULCANIZED TO THE EXTERNAL LOAD PLATE (EXTERNAL LOAD PLATE NOT SHOWN FOR CLARITY).

FIXED & EXPANSION BEARING PAD DETAIL

SCALE: 3" = 1'-0"

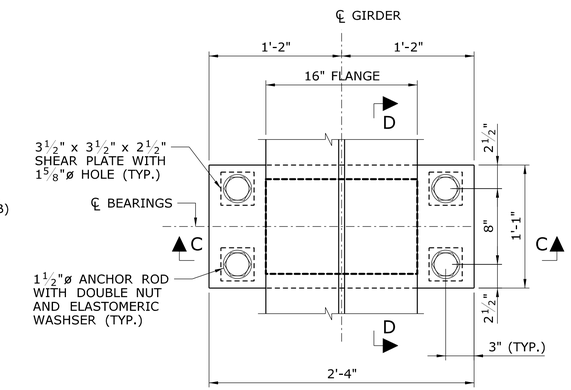

TYPICAL FIXED BEARING PLAN

SCALE: 1½" = 1'-0"

ELASTOMERIC BEARING NOTES:

1. THE ELASTOMERIC BEARINGS ARE DESIGNED USING "METHOD A" OF THE AASHTO LRFD BRIDGE DESIGN SPECIFICATIONS.
2. THE CONTRACTOR SHALL SURVEY THE AS BUILT PEDESTAL MEASUREMENTS AND SUBMIT TO THE ENGINEER FOR REVIEW PRIOR TO STEEL ERECTION.
3. THE ELASTOMER SHALL CONTAIN ONLY VIRGIN POLYCHLOROPRENE (NEOPRENE) AS THE RAW POLYMER AND HAVE A SPECIFIED SHEAR MODULUS BETWEEN 0.125 KSI AND 0.175 KSI.
4. THE INTERNAL STEEL LAMINAE SHALL CONFORM THE REQUIREMENTS OF ASTM A1011, GRADE 36 OR 40.
5. THE STEEL FOR THE BEVELED SOLE PLATE SHALL CONFORM TO THE REQUIREMENTS OF AASHTO M270, GRADE 50WT2 (GALVANIZED STEEL) AS SPECIFIED WITHIN THE ITEM "STRUCTURAL STEEL (SITE NO. 1)".
6. BOLTS AT THE EXPANSION BEARINGS SHALL BE ⅞"ø AND SHALL CONFORM TO THE REQUIREMENTS OF ASTM A325 TYPE 1.
7. ANCHOR RODS AT THE FIXED BEARINGS SHALL BE 1½"ø AND SHALL CONFORM TO THE REQUIREMENTS OF ASTM F1554 GRADE 36.
8. WELDING DETAILS, PROCEDURES AND TESTING METHODS SHALL CONFORM TO THE LATEST ANSI/AASHTO/AWS D1.5 - BRIDGE WELDING CODE, UNLESS OTHERWISE NOTED ON THE PLANS.
9. BEVELED SOLE PLATE THICKNESS SHALL VARY, WITH A THICKNESS OF 1½" AS MEASURED AT THE CENTERLINE OF BEARINGS. BEVELED SOLE PLATES SHALL BE DETAILED AND FABRICATED SUCH THAT THE BOTTOM OF THE BEVELED SOLE PLATE IS LEVEL UPON FULL APPLICATION OF DEAD LOADS.
10. THE ELASTOMERIC BEARINGS SHALL BE INSTALLED WHEN THE AMBIENT AIR AND BEARING TEMPERATURES ARE BETWEEN 40° F AND 85° F AND HAVE BEEN WITHIN THIS RANGE FOR AT LEAST TWO HOURS.
11. THE COST OF FURNISHING AND INSTALLING THE ELASTOMERIC BEARINGS, INCLUDING THE EXTERNAL LOAD PLATES, SHALL BE PAID FOR UNDER THE ITEM "STEEL-LAMINATED ELASTOMERIC BEARINGS." THE COST OF THE BEVELED SOLE PLATES AND EXTERNAL LOAD PLATES SHALL PAID FOR UNDER THE ITEM "STRUCTURAL STEEL (SITE NO. 1)."
12. THE MAXIMUM UNFACTORED DESIGN LOAD (DL + LL WITHOUT IMPACT) FOR EACH BEARINGS PAD IS 143 KIPS. THIS INFORMATION IS PROVIDED FOR THE PROOF LOAD TEST DESCRIBED IN THE SPECIAL PROVISIONS "STEEL-LAMINATED ELASTOMERIC BEARINGS."

ADDENDUM NO. 2

REV.	DATE	REVISION DESCRIPTION	SHEET NO.
-	-	-	-
-	-	-	-
-	-	-	-
-	-	-	-
-	-	-	-
1	11/21/18	REVISED FIXED BEARING DETAIL	04.25.A2

THE INFORMATION, INCLUDING ESTIMATED QUANTITIES OF WORK, SHOWN ON THESE SHEETS IS BASED ON LIMITED INVESTIGATIONS BY THE STATE AND IS IN NO WAY WARRANTED TO INDICATE THE CONDITIONS OF ACTUAL QUANTITIES OF WORK WHICH WILL BE REQUIRED.

Plotted Date: 11/30/2018

DESIGNER/DRAFTER: JRA

CHECKED BY: AML

SCALE AS NOTED

STATE OF CONNECTICUT
DEPARTMENT OF TRANSPORTATION

Filename: ...\S-25 BEARING DETAILS_A2.dgn

SIGNATURE/BLOCK:

Stantec Consulting Services Inc.
55 Church Street
Suite 601
New Haven, CT 06510

PROJECT TITLE:
REPLACEMENT OF BRIDGE NO. 01446, WHEELERS FARMS ROAD OVER SR 796

TOWN: MILFORD

DRAWING TITLE: BEARING DETAILS

PROJECT NO. 83-264

DRAWING NO. S-25

SHEET NO. 04.25.A2

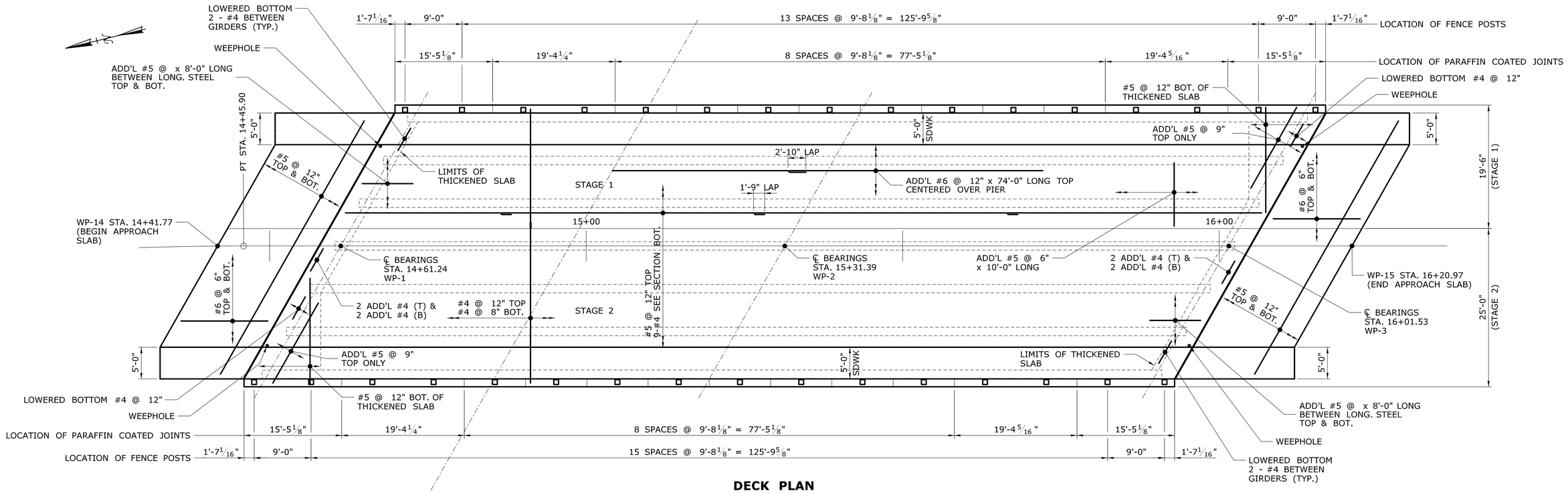

DECK PLAN

SCALE: 1/8" = 1'-0"

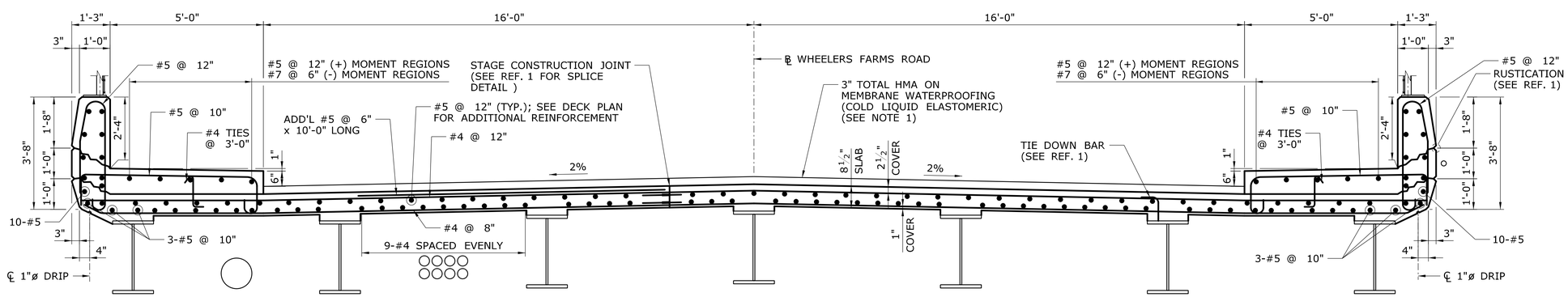

TYPICAL DECK SECTION

SCALE: 1/2" = 1'-0"

NOTES

1. STAGE 1: 1.25" HMA S0.375 AND

   STAGE 2: 1" HMA S0.25

   FINAL STAGE: HMA S0.5 WITH TACK COAT ACROSS FULL WIDTH OF BRIDGE TO MAKE 3" TOTAL PAVEMENT THICKNESS

1

REFERENCE	SHEET NO.
1. DECK DETAILS - 2	04.28

ADDENDUM NO. 2

REV.	DATE	REVISION DESCRIPTION	SHEET NO.
-	-	-	-
-	-	-	-
-	-	-	-
-	-	-	-
-	-	-	-
1	11/21/18	REVISED WEARING SURFACE NOTE	04.26.A2

THE INFORMATION, INCLUDING ESTIMATED QUANTITIES OF WORK, SHOWN ON THESE SHEETS IS BASED ON LIMITED INVESTIGATIONS BY THE STATE AND IS IN NO WAY WARRANTED TO INDICATE THE CONDITIONS OF ACTUAL QUANTITIES OF WORK WHICH WILL BE REQUIRED.

Plotted Date: 11/30/2018

DESIGNER/DRAFTER: JJF

CHECKED BY: AML

SCALE AS NOTED

STATE OF CONNECTICUT
DEPARTMENT OF TRANSPORTATION

Filename: ...\S-26 DECK PLAN.A2.dgn

SIGNATURE/BLOCK:

Stantec Consulting Services Inc.
55 Church Street
Suite 601
New Haven, CT 06510

PROJECT TITLE:

REPLACEMENT OF BRIDGE NO. 01446, WHEELERS FARMS ROAD OVER SR 796

TOWN: **MILFORD**

DRAWING TITLE: **DECK PLAN**

PROJECT NO. **83-264**

DRAWING NO. **S-26**

SHEET NO. **04.26.A2**