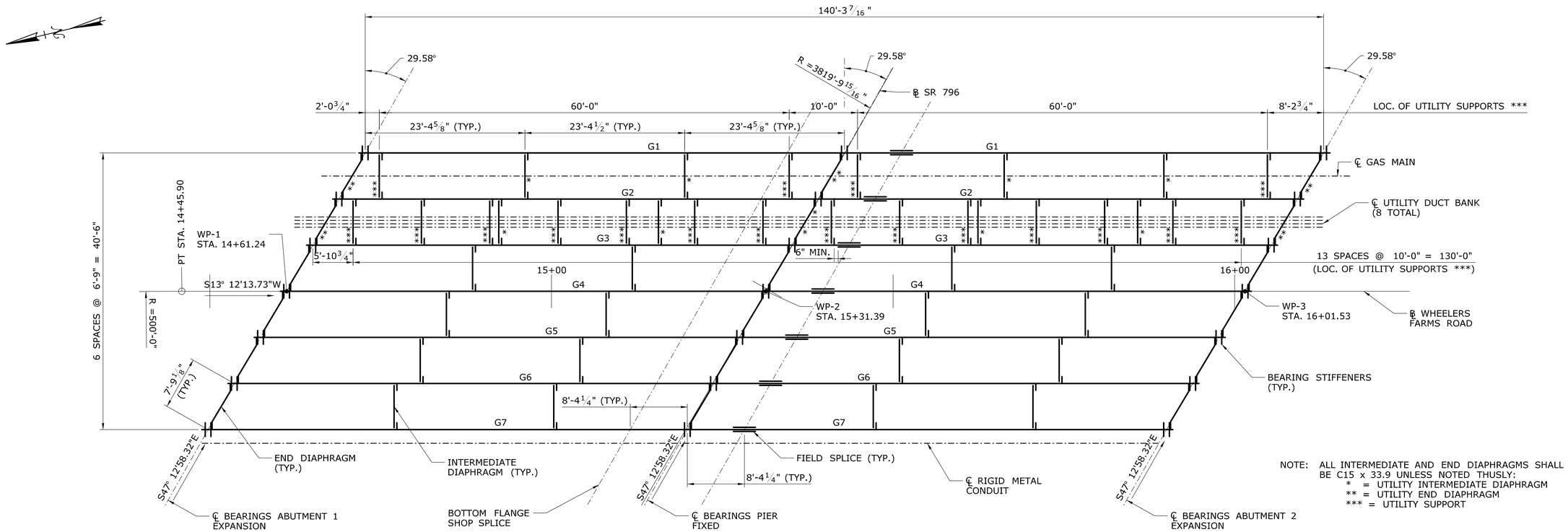

NOTE: ALL INTERMEDIATE AND END DIAPHRAGMS SHALL BE C15 x 33.9 UNLESS NOTED THUSLY:
* = UTILITY INTERMEDIATE DIAPHRAGM
** = UTILITY END DIAPHRAGM
*** = UTILITY SUPPORT

FRAMING PLAN

SCALE: 1/8" = 1'-0"

STRUCTURAL STEEL NOTES:

1. ALL STRUCTURAL STEEL FOR INCLUDING FLANGE PLATES, WEB PLATES, GIRDER FIELD SPLICE PLATES, DIAPHRAGMS, CONNECTION PLATES, DRIP BARS AND BEARING STIFFENERS SHALL CONFORM TO AASHTO M270, GRADE 50T2, AND SHALL BE GALVANIZED IN ACCORDANCE WITH ASTM A123. (1)
2. WELDING DETAILS, PROCEDURES AND TESTING METHODS SHALL CONFORM TO ANSI/AASHTO/AWS D1.5-200 - BRIDGE WELDING CODE, UNLESS OTHERWISE NOTED.
3. BOLTED FIELD SPLICES, OTHER THAN THOSE INDICATED ON THE PLANS, WILL NOT BE ALLOWED EXCEPT WITH THE WRITTEN PERMISSION OF THE ENGINEER PRIOR TO SUBMISSION OF SHOP PLANS. IF ALLOWED, THESE SPLICES SHALL BE DESIGNED BY THE CONTRACTOR AND APPROVED BY THE ENGINEER. THE COST OF THESE SPLICES, INCLUDING THE COST OF DESIGN, SHALL BE AT NO EXTRA EXPENSE TO THE STATE.
4. ALL WEB FLANGE, WEB TO BEARING STIFFENER AND BEARING STIFFENER TO FLANGE FILLET WELDS SHALL BE INSPECTED IN THEIR ENTIRETY BY THE MAGNETIC PARTICLE METHOD.
5. MULTIPLE PASS WELDS, INSPECTED BY THE MAGNETIC PARTICLE METHOD, SHALL HAVE EACH PASS OR LAYER INSPECTED AND ACCEPTED BEFORE PROCEEDING TO THE NEXT PASS OR LAYER, AS DETERMINED BY THE ENGINEER.
6. BEARING STIFFENERS AND THE ENDS OF GIRDERS SHALL BE VERTICAL AFTER THE APPLICATION OF DEAD LOADS.
7. FLANGE OR WEB SPLICES SHALL BE LOCATED A MINIMUM OF SIX INCHES FROM STIFFENERS AND CONNECTION PLATES.
8. THE STRUCTURAL STEEL FABRICATOR SHALL BE CERTIFIED UNDER THE AISC QUALITY CONTROL PROGRAM AS NOTED BELOW:

   CATEGORY MBr - MAJOR STEEL BRIDGES
9. THE CONTRACTOR SHALL TAKE PROPER PRECAUTIONS TO INSURE THE STABILITY OF ALL STRUCTURAL ELEMENTS UNTIL THE TOTAL STRUCTURE IS IN BEING.
10. IT SHALL BE THE CONTRACTOR'S RESPONSIBILITY TO PROVIDE ANY ADDITIONAL TEMPORARY BRACING REQUIRED TO MAINTAIN THE GEOMETRY OF THE INDIVIDUAL PLATE GIRDERS, AS WELL AS THE TOTAL STEEL STRUCTURE, THROUGHOUT ALL PHASES OF CONSTRUCTION INCLUDING PLACEMENT OF THE CONCRETE DECK.
11. SHOP WELDED SPLICES SHALL BE LOCATED WITHIN THE MIDDLE THIRD OF THE SPAN.
12. THE COST INCIDENTAL TO THE INSTALLATION OF THE UTILITY HANGERS SHALL BE INCLUDED IN THE COST OF "STRUCTURAL STEEL (SITE NO. 1)".

Andrew Lessard
2018.11.15
14:14:28-05'00'

ADDENDUM NO. 1

REV.	DATE	REVISION DESCRIPTION	SHEET NO.
-	-	-	-
-	-	-	-
-	-	-	-
-	-	-	-
-	-	-	-
1	11/15/18	REVISED STRUCTURAL STEEL GRADE IN NOTE 1	04.21.A1

THE INFORMATION, INCLUDING ESTIMATED QUANTITIES OF WORK, SHOWN ON THESE SHEETS IS BASED ON LIMITED INVESTIGATIONS BY THE STATE AND IS IN NO WAY WARRANTED TO INDICATE THE CONDITIONS OF ACTUAL QUANTITIES OF WORK WHICH WILL BE REQUIRED.

Plotted Date: 11/15/2018

DESIGNER/DRAFTER: JJF
CHECKED BY: AML
SCALE AS NOTED

STATE OF CONNECTICUT
DEPARTMENT OF TRANSPORTATION

Filename: ...\S-21 FRAMING PLAN_A1.dgn

SIGNATURE/BLOCK:
Stantec Consulting Services Inc.
55 Church Street
Suite 601
New Haven, CT 06510

PROJECT TITLE: REPLACEMENT OF BRIDGE NO. 01446, WHEELERS FARMS ROAD OVER SR 796

TOWN: MILFORD

DRAWING TITLE: FRAMING PLAN

PROJECT NO. 83-264
DRAWING NO. S-21
SHEET NO. 04.21.A1

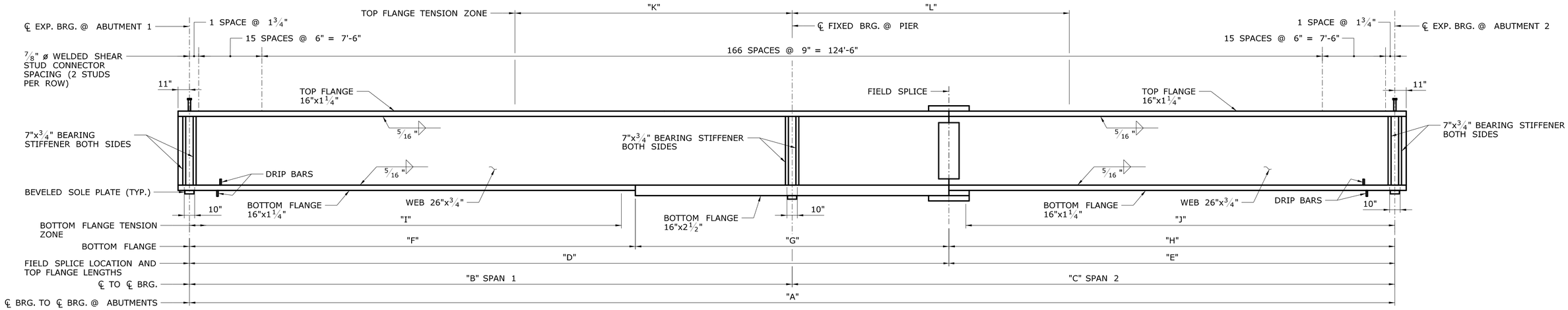

GIRDER ELEVATION

NOT TO SCALE

	℄ TO ℄ BRG. (FT.)			FIELD SPLICE AND TOP FLANGE LENGTHS (FT.)		BOTTOM FLANGE (FT.)			BOTTOM FLANGE TENSION ZONES (FT.)		TOP FLANGE TENSION ZONE (FT.)	
GIRDER	A	B	C	D	E	F	G	H	I	J	K	L
G1	140.288	70.144	70.144	78.500	61.788	61.792	16.708	61.788	60.000	60.000	38.000	37.000
G2	140.288	70.144	70.144	78.500	61.788	61.792	16.708	61.788	60.000	60.000	38.000	37.000
G3	140.288	70.144	70.144	78.500	61.788	61.792	16.708	61.788	60.000	60.000	38.000	37.000
G4	140.288	70.144	70.144	78.500	61.788	61.792	16.708	61.788	60.000	60.000	38.000	37.000
G5	140.288	70.144	70.144	78.500	61.788	61.792	16.708	61.788	60.000	60.000	38.000	37.000
G6	140.288	70.144	70.144	78.500	61.788	61.792	16.708	61.788	60.000	60.000	38.000	37.000
G7	140.288	70.144	70.144	78.500	61.788	61.792	16.708	61.788	60.000	60.000	38.000	37.000

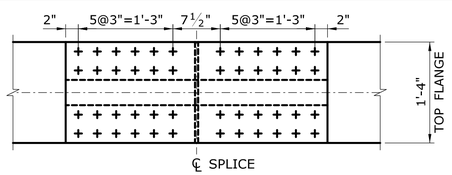

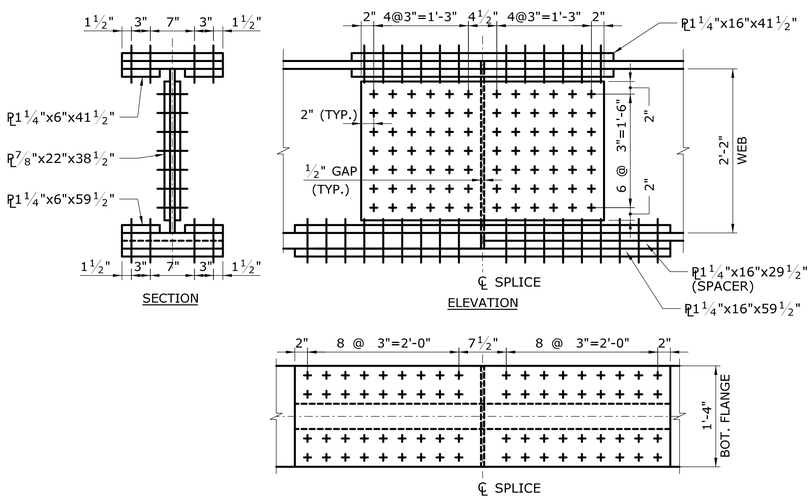

SPLICE DETAIL

SCALE: 1" = 1'-0"

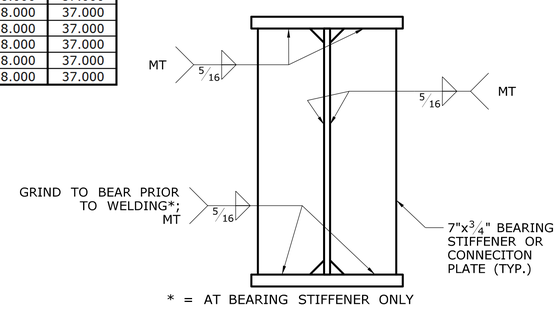

BEARING STIFFENER AND CONNECTION PLATE DETAIL

SCALE: 1½" = 1'-0"

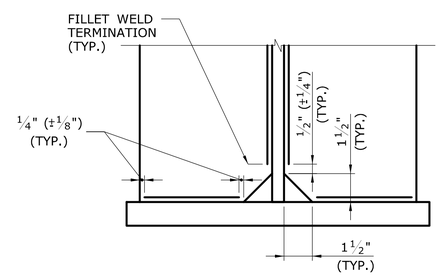

BEARING STIFFENER AND CONNECTION PLATE WELD TERMINATION AND CLIP DETAIL

SCALE: 3" = 1'-0"

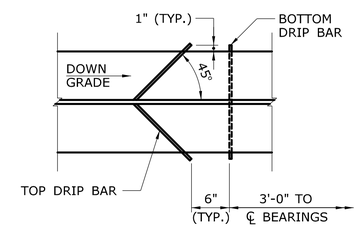

DRIP BAR DETAIL - PLAN

SCALE: 1" = 1'-0"

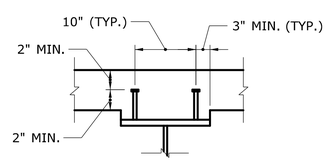

SHEAR STUDS SHALL BE INSTALLED AFTER ERECTION OF ALL GIRDERS IS COMPLETE AND THE TOP OF STEEL ELEVATIONS HAVE BEEN SURVEYED. SEE HAUNCH NOTES ON DECK DETAILS. REQUIRED SHEAR STUD LENGTHS SHALL BE DETERMINED BY THE CONTRACTOR BASED ON AS ERECTED INFORMATION AND THE ABOVE SHEAR CONNECTOR DETAIL.

SHEAR CONNECTOR DETAIL

NOT TO SCALE

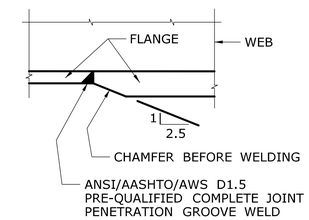

FLANGE SPLICE WELD DETAIL

NOT TO SCALE

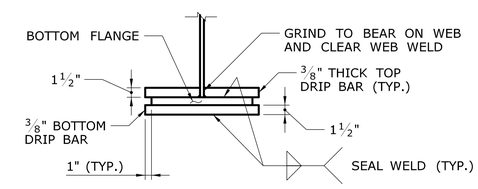

DRIP BAR DETAIL - SECTION

SCALE: 1" = 1'-0"

FIELD SPLICE NOTES

1. ALL SPLICE BOLTS TO BE A325 (TYPE 1 GALVANIZED) ⅞"ø.
2. ALL SPLICE HOLES TO BE 15/16"ø.
3. SHEAR CONNECTORS TO BE INSTALLED AT TOP FLANGE SPLICE PLATE WHERE REQUIRED.
4. ALL SPLICE BOLTS AT FASCIA SPLICES SHALL BE INSTALLED WITH THE BOLT HEAD SHOWING TO PUBLIC.
5. ADJUST SPACING OF SHEAR STUDS TO AVOID FIELD SPLICE BOLTS.
6. BOLTED FIELD SPLICES ARE DESIGNED AS SLIP CRITICAL CONNECTIONS WITH CLASS "C" CONTACT FAYING SURFACES.
7. BOLTED FIELD SPLICES SHALL BE PAID FOR UNDER THE CONTRACT UNIT PRICE FOR "STRUCTURAL STEEL (SITE NO. 1)".
8. ALL BOLT THREADS TO BE EXCLUDED FROM THE SHEAR PLANE.

ADDENDUM NO. 1

REV.	DATE	REVISION DESCRIPTION	SHEET NO.
-	-	-	-
-	-	-	-
-	-	-	-
-	-	-	-
-	-	-	-
1	11/15/18	REVISED FIELD SPLICE BOLT TYPE IN NOTE 1	04.22.A1

THE INFORMATION, INCLUDING ESTIMATED QUANTITIES OF WORK, SHOWN ON THESE SHEETS IS BASED ON LIMITED INVESTIGATIONS BY THE STATE AND IS IN NO WAY WARRANTED TO INDICATE THE CONDITIONS OF ACTUAL QUANTITIES OF WORK WHICH WILL BE REQUIRED.

Plotted Date: 11/15/2018

DESIGNER/DRAFTER: JJF
CHECKED BY: AML
SCALE AS NOTED

STATE OF CONNECTICUT
DEPARTMENT OF TRANSPORTATION

Filename: ...\S-22 STRUCTURAL STEEL DETAILS - 1_A1.dgn

SIGNATURE/BLOCK:
Stantec Consulting Services Inc.
55 Church Street
Suite 601
New Haven, CT 06510

PROJECT TITLE:
REPLACEMENT OF BRIDGE NO. 01446, WHEELERS FARMS ROAD OVER SR 796

TOWN: **MILFORD**

DRAWING TITLE: **STRUCTURAL STEEL DETAILS - 1**

PROJECT NO. 83-264
DRAWING NO. S-22
SHEET NO. 04.22.A1