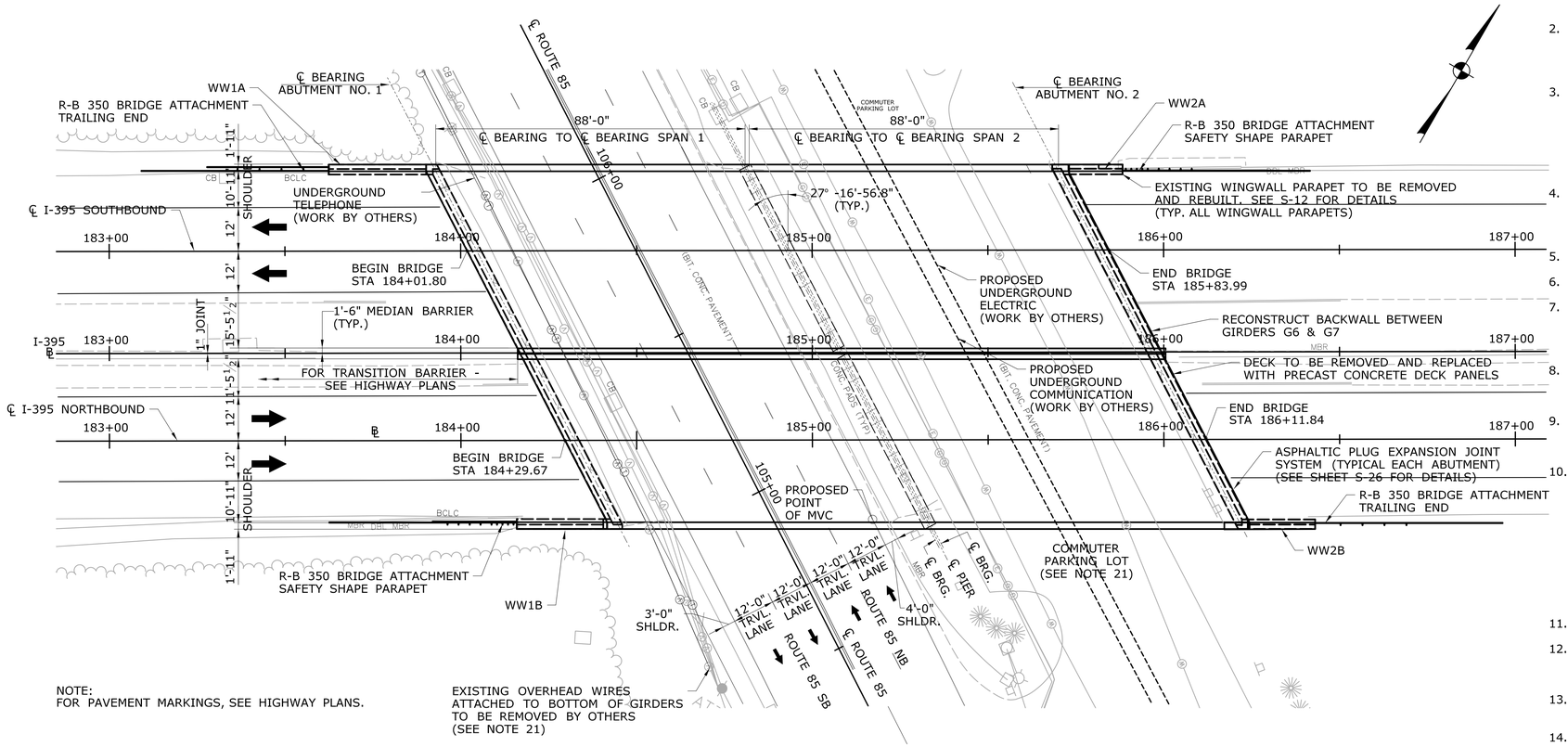


NOTE:
FOR PAVEMENT MARKINGS, SEE HIGHWAY PLANS.

## GENERAL PLAN
SCALE: 1" = 20'

ELEVATIONS MARKED "*" WERE NOT MEASURED BUT OBTAINED FROM ORIGINAL DESIGN DRAWINGS OF 1958 AND CONVERTED TO THE N.A.V.D. 1988 DATUM USED ON THIS PROJECT. THESE ELEVATIONS ARE APPROXIMATE AND ARE PROVIDED FOR COMPARISON ONLY.

| TRANSPORTATION DIMENSION & MASS DATA | | | | |
|---|---|---|---|---|
| PRECAST DECK PANELS | | | | |
| DECK UNITS | L | W | THK. | MAX WT. |
| S-2 | 28'-0" | 8'-0" | 8½" | 23,800 LBS. |

| CONCRETE DISTRIBUTION | | |
|---|---|---|
| SUBSTRUCTURE | CY | 19 CY |
| SUPERSTRUCTURE (CAST-IN-PLACE) | CY | 281 CY |
| SUPERSTRUCTURE (PRECAST) | CY | 426 CY |
| TOTAL | CY | 726 CY |

| INSPECTION OF FIELD WELDS | | |
|---|---|---|
| METHOD | UNIT | QUANTITY |
| ULTRASONIC | IN. | 0 |
| MAGNETIC PARTICLE | L.F. | 24 |

NOTICE TO BRIDGE INSPECTORS

THE DEPARTMENT'S BRIDGE SAFETY PROCEDURES REQUIRE THIS BRIDGE TO BE INSPECTED FOR, BUT NOT LIMITED TO, ALL APPROPRIATE COMPONENTS INDICATED IN THE GOVERNING MANUALS FOR BRIDGE INSPECTION. ATTENTION MUST BE GIVEN TO INSPECTING THE FOLLOWING SPECIAL COMPONENTS AND DETAILS. (THE LISTING FOR COMPONENTS FOR SPECIFIC ATTENTION SHALL NOT BE CONSTRUED TO REDUCE THE IMPORTANCE OF INSPECTION OF ANY OTHER COMPONENT OF THE STRUCTURE.) THE FREQUENCY OF INSPECTION OF THIS STRUCTURE SHALL BE IN ACCORDANCE WITH THE GOVERNING MANUALS FOR BRIDGE INSPECTION, UNLESS OTHERWISE DIRECTED BY THE MANAGER OF BRIDGE SAFETY AND EVALUATION.

| COMPONENT OR DETAIL | STRUCTURE SHEET REFERENCE |
|---|---|
| NONE | NONE |

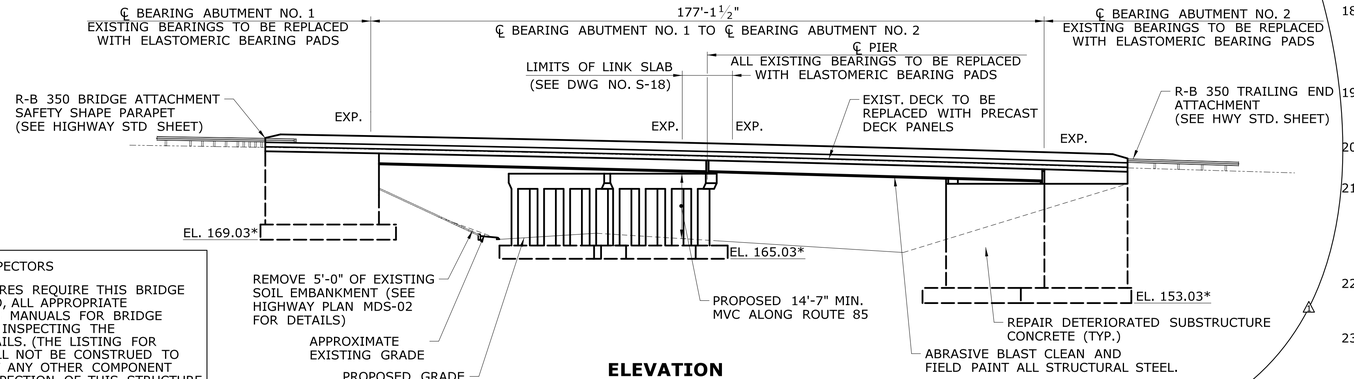


## ELEVATION
SCALE: 1" = 20'

~~* EXISTING ELEVATIONS SHOWN ON THESE PLANS ARE TAKEN FROM THE EXISTING PLANS (1929 DATUM). SUBTRACT A COMPUTER APPROXIMATED VERTICAL CONVERSION FACTOR OF 0.974' TO ARRIVE AT THE 1988 DATUM. EXISTING ELEVATIONS ARE APPROXIMATE.~~

Digitally signed by Stuart Harris, P.E.
Date: 2018.11.01 17:02:35-04'00'

## GENERAL NOTES:

1. SPECIFICATIONS: CONNECTICUT DEPARTMENT OF TRANSPORTATION FORM 817 (2016), SUPPLEMENTAL SPECIFICATIONS DATED JANUARY 2018 AND SPECIAL PROVISIONS.
2. DESIGN SPECIFICATIONS: AASHTO LRFD BRIDGE DESIGN SPECIFICATIONS 8TH EDITION, WITH THE INTERIM SPECIFICATIONS UP TO AND INCLUDING THE YEAR 2015, AS SUPPLEMENTED BY THE CONNECTICUT DEPARTMENT OF TRANSPORTATION BRIDGE DESIGN MANUAL (2003).
3. DESIGN STRENGTH:
   CLASS "F" CONCRETE ..... f'c = 4000 psi
   CONCRETE "S" CONCRETE ..... f'c = 4000 psi
   REINFORCEMENT (ASTM A615, GRADE 60) ..... fy = 60,000 psi
   STRUCTURAL STEEL (AASHTO M270, GRADE 36) ..... fy = 36,000 psi
   PRECAST CONCRETE DECK PANELS ..... f'c = 6000 psi
   HIGH EARLY STRENGTH CONCRETE..... f'c = 2500 psi(6 HRS), f'c=6000 psi(28 DAYS)
4. THE SPECIFIED CONCRETE STRENGTH USED IN DESIGN, f'c, OF THE CONCRETE IS NOTED ABOVE. THE MINIMUM COMPRESSIVE STRENGTH OF THE CONCRETE IN THE CONSTRUCTED COMPONENTS SHALL CONFORM TO THE REQUIREMENTS OF "SECTION 6.01 CONCRETE FOR STRUCTURES."
5. LIVE LOAD: AASHTO HL-93
6. FUTURE PAVING ALLOWANCE: NONE
7. PAINT: PAINT SHALL CONFORM TO THE REQUIREMENTS OF ITEM NO. 0603147 - "ABRASIVE BLAST CLEANING AND FIELD PAINTING OF STRUCTURE" THE COLOR OF THE TOP COAT MATERIAL ON THE STRUCTURAL STEEL SHALL BE GREEN - FEDERAL STANDARD 595, COLOR NO. 24277.
8. BITUMINOUS CONCRETE OVERLAY: THIS SHALL CONSIST OF TWO COURSES. THE BOTTOM COURSE SHALL BE 1" OF HMA S0.25 TRAFFIC LEVEL 2 AND THE TOP COURSE SHALL BE 2" OF HMA S0.375 TRAFFIC LEVEL 3.
9. DIMENSIONS: ALL DIMENSIONS SHOWN ON THE PLANS ARE IN FEET AND INCHES EXCEPT IF NOTED OTHERWISE. WHEN ELEVATIONS ARE GIVEN TO LESS THAN THREE DECIMAL PLACES, THE OMITTED DIGITS ARE ASSUMED TO BE ZEROS.
10. EXISTING DIMENSIONS: DIMENSIONS OF THE EXISTING STRUCTURE SHOWN ON THESE PLANS ARE FOR GENERAL REFERENCE ONLY. THEY HAVE BEEN TAKEN FROM DESIGN DRAWINGS (CONNDOT PROJECT NO. 325-01, AND 325-06) AND ARE NOT GUARANTEED. THE CONTRACTOR SHALL TAKE ALL FIELD MEASUREMENTS NECESSARY TO ASSURE PROPER FIT OF THE FINISHED WORK AND SHALL ASSUME FULL RESPONSIBILITY FOR THEIR ACCURACY. WHEN SHOP DRAWINGS BASED ON FIELD MEASUREMENTS ARE SUBMITTED FOR APPROVAL, THE FIELD MEASUREMENTS SHALL ALSO BE SUBMITTED FOR REFERENCE BY THE REVIEWER. UNDER NO CIRCUMSTANCES SHALL ANY STRUCTURAL STEEL OR DEFORMED STEEL BARS BE FABRICATED PRIOR TO FIELD VERIFYING ALL DIMENSIONS AND RECEIVING APPROVAL OF ALL MEASUREMENTS FROM THE ENGINEER.
11. THE USE OF REMAIN-IN-PLACE FORMS ON THIS STRUCTURE IS NOT ALLOWED.
12. NO INTERMEDIATE SUPPORTS SHALL BE USED DURING THE PLACING & SETTING OF CAST-IN-PLACE CONCRETE DECK SLAB. CONSTRUCTION LOAD & DEAD LOADS WILL BE PERMITTED WHEN DIRECTED BY THE ENGINEER.
13. CLASS "F" CONCRETE: CLASS "F" CONCRETE SHALL BE USED FOR THE CONCRETE BRIDGE, WINGWALL STEM AND PARAPETS, MEDIAN BARRIERS, CONCRETE KEEPER BLOCKS AND BACKWALL.
14. CLASS "S" CONCRETE: CLASS "S" CONCRETE SHALL BE USED FOR SUBSTRUCTURE REPAIR.
15. HIGH EARLY STRENGTH CONCRETE SHALL BE USED FOR CLOSURE POURS AND THE CAST-IN-PLACE DECK ALONG SKEWED ENDS.
16. EXPOSED EDGES: EXPOSED EDGES OF CAST-IN-PLACE CONCRETE SHALL BE BEVELED 1 INCH X 1 INCH UNLESS DIMENSIONED OTHERWISE.
17. CONCRETE COVER: ALL REINFORCEMENT SHALL HAVE 2 INCH COVER UNLESS DIMENSIONED OTHERWISE.
18. EPOXY COATED REINFORCING BARS SHALL BE PROVIDED IN THE PARAPETS, MEDIAN BARRIER, CIP PORTIONS OF DECK SLAB, KEEPER BLOCKS, WINGWALL STEM AND PARAPETS. THESE EPOXY COATED BARS SHALL BE INCLUDED IN THE PAY ITEM FOR "DEFORMED STEEL BARS (EPOXY COATED)." EPOXY COATED REINFORCING BARS SHALL ALSO BE PROVIDED IN THE PRECAST CONCRETE DECK PANELS.
19. MEMBRANE WATERPROOFING ENTIRE (COLD LIQUID ELASTOMERIC): COLD LIQUID ELASTOMERIC SHALL BE PLACED ON THE BRIDGE DECK AFTER PRECAST CONCRETE DECK PANELS AND THE CAST IN PLACE ENTIRE PORTION OF THE DECK ARE IN PLACE AND CURING IS COMPLETE.
20. CONSTRUCTION JOINTS: CONSTRUCTION JOINTS, OTHER THAN THOSE SHOWN ON THE PLANS, WILL NOT BE PERMITTED WITHOUT THE PRIOR APPROVAL OF THE ENGINEER.
21. UTILITIES: THE CONTRACTOR SHALL TAKE THE PROPER PRECAUTIONS TO ENSURE THAT THERE WILL BE NO DISRUPTION OF EXISTING UTILITIES WHILE COMPLETING REQUIRED WORK. UTILITY SUPPORT AND ADJUSTMENT TO BE PROVIDED BY OTHERS. THE CONTRACTOR SHALL MAINTAIN PROPER CLEARANCE FROM UTILITIES AND COORDINATE WITH OTHERS. ALL UTILITIES WILL BE RELOCATED AWAY FROM THE SUPERSTRUCTURE. SEE FIO UTILITY SUBSETS FOR ADDITIONAL INFORMATION.
22. CONTRACTOR SHALL HAVE FULL ACCESS TO THE COMMUTER PARKING LOT AND MAY USE THIS AREA AS A STAGING AREA DURING CONSTRUCTION. THE AREA SHALL BE RESTORED TO PRE-CONSTRUCTION CONDITIONS AFTER COMPLETION OF CONSTRUCTION.
23. INCLUDE BRIDGE NUMBER PLACARDS: THIS SIGN IS TYPICALLY 4" X 12" ALUMINUM SHEET METAL WITH WHITE LETTERS ON A GREEN BACKGROUND WITH 5 NUMERALS (00255). IT SHOULD BE LOCATED AT THE LEADING END OF EACH PARAPET, MOUNTED TO THE FRONT FACE OF THE PARAPET WITH THE SIGN AND LEGEND READING HORIZONTALLY.
24. CLOSED CELL ELASTOMER: THE COST OF FURNISHING & INSTALLING CLOSED CELL ELASTOMER SHALL BE INCLUDED IN THE COST OF ITEM CLASS 'F' CONCRETE.

**ADDENDUM NO. 2**

| REV. | DATE | REVISION DESCRIPTION | SHEET NO. |
|---|---|---|---|
| 1 | 10/22/18 | REVISED ELEVATION CONVERSION NOTE | |

THE INFORMATION, INCLUDING ESTIMATED QUANTITIES OF WORK, SHOWN ON THESE SHEETS IS BASED ON LIMITED INVESTIGATIONS BY THE STATE AND IS IN NO WAY WARRANTED TO INDICATE THE CONDITIONS OF ACTUAL QUANTITIES OF WORK WHICH WILL BE REQUIRED.

Plotted Date: 10/22/2018

DESIGNER/DRAFTER: JM
CHECKED BY: ASG
SCALE AS NOTED

STATE OF CONNECTICUT
DEPARTMENT OF TRANSPORTATION

Filename: ...\S_02_SB_MSH_BR00255_0152_0158_GENERAL_PLAN.dgn

SIGNATURE/BLOCK:

AI Engineers, Inc.
919 MIDDLE STREET
MIDDLETOWN, CT 06457
Phone: (860) 635-7740
Fax: (860) 635-7312

PROJECT TITLE:
**REHABILITATION OF BRIDGE NO. 00255 I-395 OVER ROUTE 85**

TOWN: **WATERFORD**

DRAWING TITLE: **GENERAL PLAN AND ELEVATION**

PROJECT NO. **152-158**
DRAWING NO. **S-02**
SHEET NO. **04.02A2**

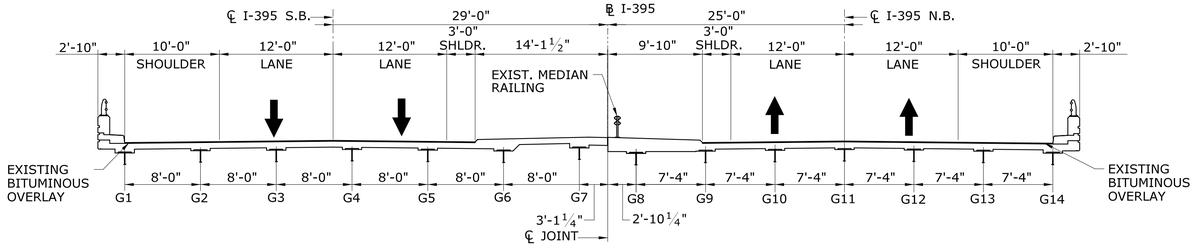


## EXISTING TYPICAL SECTION

SCALE: ⅛" = 1'-0"

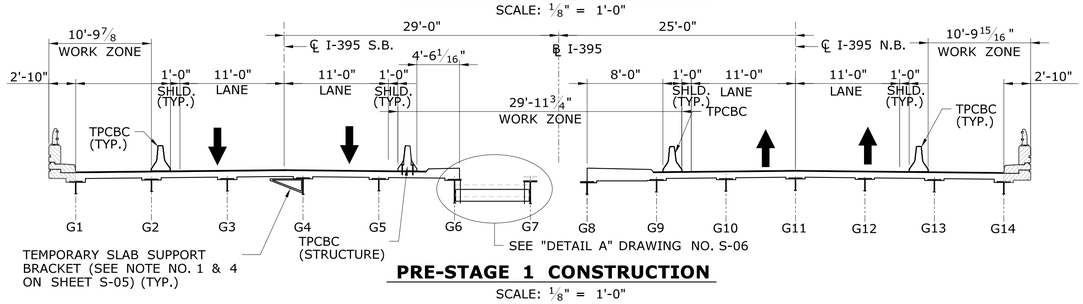


## PRE-STAGE 1 CONSTRUCTION

SCALE: ⅛" = 1'-0"

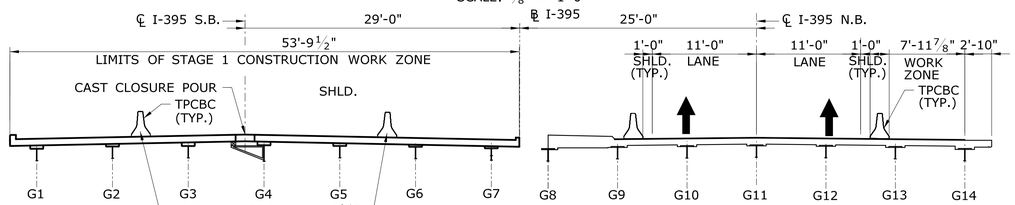


## STAGE 1 CONSTRUCTION

SCALE: ⅛" = 1'-0"

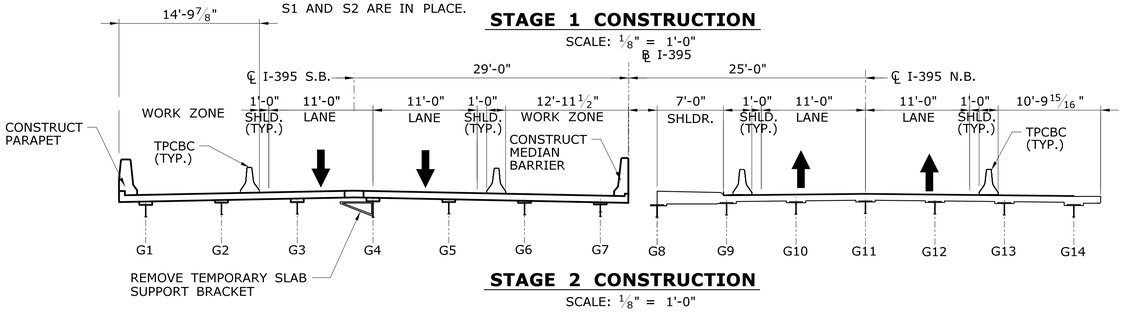


## STAGE 2 CONSTRUCTION

SCALE: ⅛" = 1'-0"

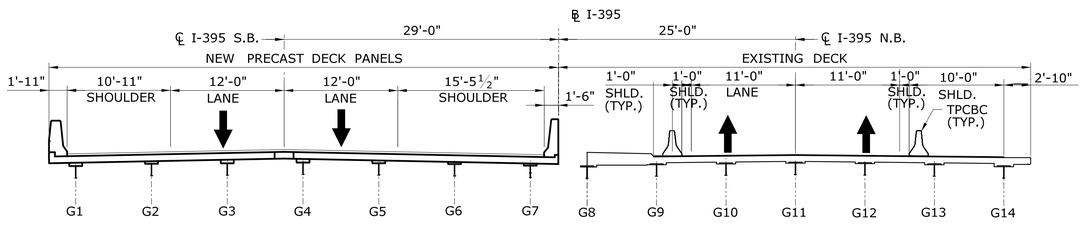


## FINAL CONDITION (COMPLETION OF STAGE 2)

SCALE: ⅛" = 1'-0"

## I-395 SOUTHBOUND CONSTRUCTION

## SUGGESTED CONSTRUCTION SEQUENCE:

PRE-STAGE 1 CONSTRUCTION

1. INSTALL DEBRIS SHIELD UNDER ENTIRE SOUTHBOUND STRUCTURE CONTRACTOR SHALL COORDINATE THE NEED FOR DEBRIS SHIELD UNDER G7 WITH THE ENGINEER.
2. REPAIR SUBSTRUCTURE WHERE INDICATED ON THE PLANS AND AS DIRECTED BY THE ENGINEER.
3. INSTALL TEMPORARY PRECAST CONCRETE BARRIER CURB ON I-395 NORTHBOUND AND SOUTHBOUND MEDIAN AND TEMPORARY PRECAST CONCRETE BARRIER TPCBC (STRUCTURE) ALONG SHOULDER LINES AS SHOWN. SEE TRAFFIC PLANS.
4. REMOVE PORTION OF CONCRETE DECK AND BACKWALL BETWEEN GIRDER G6 AND GIRDER G7.
5. DISCONNECT DIAPHRAGMS BETWEEN GIRDERS G6 AND G7 AND TEMPORARILY SUPPORT GIRDER G7 OFF THE PEDESTALS.
6. RECONSTRUCT GIRDER G7 PEDESTALS ON ABUTMENTS AND PIER TO PROPOSED ELEVATIONS.
7. RECONSTRUCT ABUTMENT BACKWALLS BETWEEN G6 & G7 TO PROPOSED ELEVATIONS.
8. REMOVE PAINT AT LOCATIONS OF STEEL REPAIR & REPAIR STEEL.
9. REPLACE ALL EXISTING BEARINGS AT ABUTMENTS AND PIER WITH NEW ELASTOMERIC EXPANSION BEARINGS.
10. REINSTALL GIRDER G7 ON NEW PEDESTALS AND BEARINGS AND REINSTALL DIAPHRAGMS BETWEEN GIRDERS G6 AND G7.
11. REMOVE EXISTING PARAPET AND SAFETY WALK FROM NORTHBOUND AND SOUTHBOUND STRUCTURES.
12. REMOVE CANTILEVERED DECK AT G8 TO CENTERLINE OF G8.
13. CONSTRUCT TEMPORARY SLAB SUPPORT BRACKET AT G4.

STAGE 1 CONSTRUCTION

1. DETOUR I-395 SOUTHBOUND TRAFFIC TO ROUTE 85 OFF RAMP AND CLOSE BRIDGE TO TRAFFIC. SEE TRAFFIC PLANS.
2. REMOVE TPCBC, AND TPCBC (STRUCTURE) BITUMINOUS CONCRETE OVERLAY AND CONCRETE DECK.
3. REMOVE EXISTING SHEAR CONNECTORS FROM TOP FLANGE OF GIRDERS G1 THROUGH G7.
4. REMOVE PORTIONS OF WW1A AND WW2A WINGWALLS FOR PROPOSED MODIFICATIONS.
5. INSTALL PRECAST CONCRETE DECK PANELS IN SPAN 1 & 2 INCLUDING PRECAST CONCRETE DECK PANELS IN THE DEBONDED ZONE OVER THE PIER, GROUT SHEAR KEYS & POST TENSION. INSTALL SHEAR CONNECTORS IN SHEAR CONNECTOR BLOCK-OUTS. FORM HAUNCHES AND GROUT SHEAR CONNECTOR BLOCK-OUTS AND HAUNCHES & CAST CONCRETE IN CLOSURE POURS.
6. CONSTRUCT PORTION OF CAST-IN-PLACE DECK NEAR ABUTMENTS.
7. REMOVE TEMPORARY SLAB SUPPORT BRACKET AFTER CLOSURE POUR CONCRETE REACHES 2500 PSI.
8. INSTALL TEMPORARY PRECAST CONCRETE BARRIER CURB FOR STAGE 2 CONSTRUCTION.
9. END DETOUR.

STAGE 2 CONSTRUCTION

1. RETURN I-395 SOUTHBOUND TRAFFIC ONTO NEWLY CONSTRUCTED DECK BETWEEN THE TEMPORARY PRECAST CONCRETE BARRIERS, WITH 11'-0" TRAFFIC LANES & 1'-0" SHOULDER.
2. CONSTRUCT PARAPET AND MEDIAN BARRIER ON I-395 SB STRUCTURE.
3. CONSTRUCT PORTIONS OF WW1A AND WW2A WINGWALL PARAPETS AND ANCHOR R-B 350 METAL BEAM RAIL AT LEADING AND TRAILING ENDS.
4. REMOVE TEMPORARY PRECAST CONCRETE BARRIER CURB FROM I-395 SOUTHBOUND.
5. INSTALL MEMBRANE WATERPROOFING, BRIDGE OVERLAY & APPROACH PAVEMENT WITH TEMPORARY LANE CLOSURES (NIGHT WORK).
6. REMOVE ANY TEMPORARY STRIPING & RESTRIPE FOR PERMANENT 12'-0" TRAFFIC LANE WIDTH.

## UTILITY NOTE

PRIOR TO PRE-STAGE I, ALL UTILITIES WILL BE RELOCATED AWAY FROM THE SUPERSTRUCTURE.

## DEBRIS SHIELD NOTES

1. CONTRACTOR MAY INSTALL DEBRIS SHIELD FOR BOTH NORTHBOUND AND SOUTHBOUND STRUCTURES IN THE PRE-STAGE 1.
2. NO PORTION OF THE DEBRIS SHIELD SHALL EXTEND BELOW THE BOTTOM FLANGE OF EXISTING GIRDERS. EXISTING MVC OF 14'-6" OVER ROUTE 85 SHALL BE MAINTAINED THROUGHOUT CONSTRUCTION.

## REMOVAL OF SUPERSTRUCTURE NOTE

REMOVAL OF SUPERSTRUCTURE INCLUDES THE REMOVAL OF THE EXISTING REINFORCED CONCRETE DECK, REMOVAL OF EXISTING BITUMINOUS WEARING SURFACE, REMOVAL OF EXISTING MEMBRANE WATERPROOFING, REMOVAL OF EXISTING RAILINGS, PARAPETS AND SAFETY WALK ON THE BRIDGE, REMOVAL OF EXISTING MEDIAN AND MEDIAN RAILING ON THE BRIDGE.

## TPCBC NOTES

1. THE TPCBC (STRUCTURE) ALONG I-95 SOUTHBOUND INSTALLED IN PRE-STAGE SHALL BE ANCHORED TO THE EXISTING DECK ACCORDING ANCHORAGE DETAILS SHOWN ON DWG. S-27.
2. THE TPCBC ALONG I-95 NORTHBOUND IN PRE-STAGE AND INSTALLED DURING STAGE 1 AND 3 CONSTRUCTION SHALL NOT BE ANCHORED, DUE TO AVAILABILITY OF SUFFICIENT DEFLECTION DISTANCE BEHIND THE TPCBC .

## REMOVAL OF EXISTING MASONRY NOTE

REMOVAL OF EXISTING MASONRY INCLUDES THE REMOVAL OF EXISTING RAILING ON THE WINGWALL PARAPETS REMOVAL OF WINGWALL PARAPET & SAFETY WALK & REMOVAL OF PORTIONS OF WINGWALL STEMS.

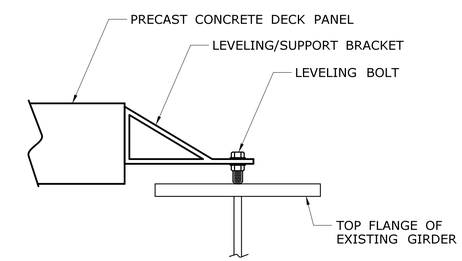


## LEVELING/SUPPORT BRACKET DETAIL

SCALE: 1½" = 1'-0"

NOTES:

1. PRECAST CONCRETE DECK PANELS ERECTED IN STAGE 1 ON THE SOUTHBOUND STRUCTURE SHALL BE SUPPORTED ON GIRDER G4 BY TEMPORARY SLAB BRACKETS ATTACHED TO THE GIRDER G4 TO DISTRIBUTE THE DEAD LOAD OF THE PANEL ON GIRDER G4 AND PREVENT THE PANEL FROM OVERHANGING FROM GIRDER G3.
2. PAYMENT FOR THE DESIGN, FABRICATION, INSTALLATION AND REMOVAL OF THE TEMPORARY SLAB SUPPORT BRACKETS AND LEVELING/SUPPORT BRACKETS SHALL BE MADE UNDER THE ITEM "PRECAST CONCRETE DECK PANELS".
3. PRECAST CONCRETE DECK PANELS ERECTED IN STAGE 3 ON ~~THE NORTHBOUND STRUCTURE SHALL BE SUPPORTED BY~~ TEMPORARY BRACKETS ~~ATTACHED TO THE END OF PRECAST PANELS AS SHOWN~~ TO DISTRIBUTE THE ~~DEAD LOAD OF THE PANEL ON GIRDER G11 AND PREVENT~~ THE PANELS FROM OVERHANGING FROM GIRDERS G10 AND G12.
4. THE PRECAST FABRICATOR IS RESPONSIBLE FOR THE DESIGN OF THE LEVELING/ SUPPORT BRACKET BASED ON THE WEIGHT OF THE PANEL AND NUMBER OF DEVICES. ALTERNATE DEVICES MAY BE SUBSTITUTED AFTER THE APPROVAL OF THE ENGINEER.

**ADDENDUM NO. 2**

| REV. | DATE | REVISION DESCRIPTION | SHEET NO. |
|---|---|---|---|
| 1 | 10/31/18 | NOTE 3 REVISED | |

THE INFORMATION, INCLUDING ESTIMATED QUANTITIES OF WORK, SHOWN ON THESE SHEETS IS BASED ON LIMITED INVESTIGATIONS BY THE STATE AND IS IN NO WAY WARRANTED TO INDICATE THE CONDITIONS OF ACTUAL QUANTITIES OF WORK WHICH WILL BE REQUIRED.

Plotted Date: 10/31/2018

DESIGNER/DRAFTER: JM
CHECKED BY: ASG
SCALE AS NOTED

STATE OF CONNECTICUT
DEPARTMENT OF TRANSPORTATION

Filename: ...\S..05..SB..MSH..BR00255..0152..015B..SB..STAGE..CONSTRUCTION.dgn

SIGNATURE/ BLOCK:

AI Engineers, Inc.
919 MIDDLE STREET
MIDDLETOWN, CT 06457
Phone: (860) 635-7740
Fax: (860) 635-7312

PROJECT TITLE:
**REHABILITATION OF BRIDGE NO. 00255**
**I-395 OVER ROUTE 85**

TOWN: **WATERFORD**

DRAWING TITLE: **STAGE CONSTRUCTION 1 & 2**

PROJECT NO. **152-158**
DRAWING NO. **S-05**
SHEET NO. **04.05.A2**

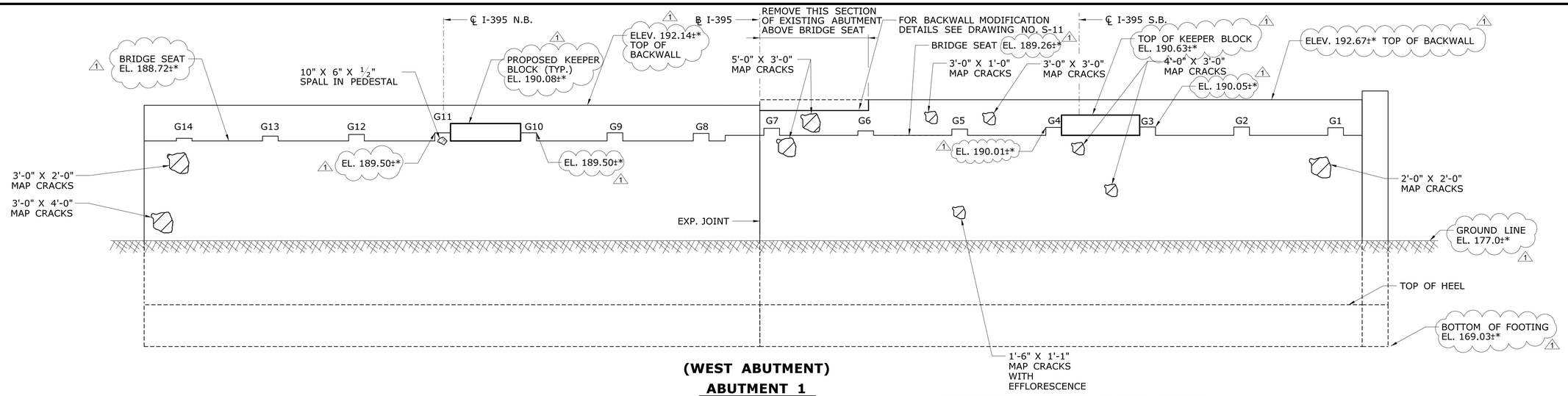


## (WEST ABUTMENT)
## ABUTMENT 1

SCALE: 3/16" = 1'-0"

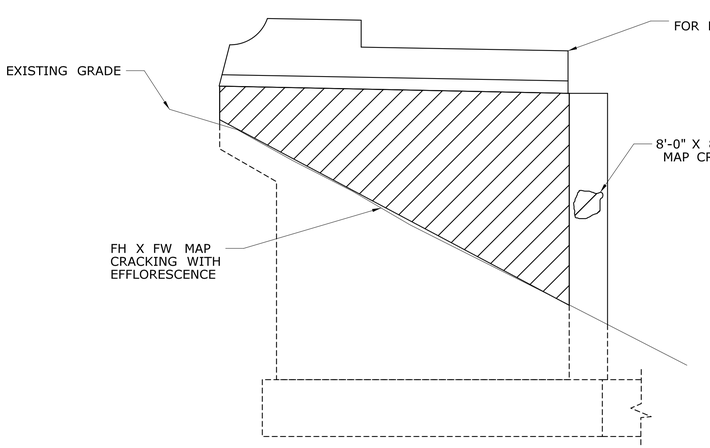


## WINGWALL 1B

SCALE: 3/16"=1'-0"

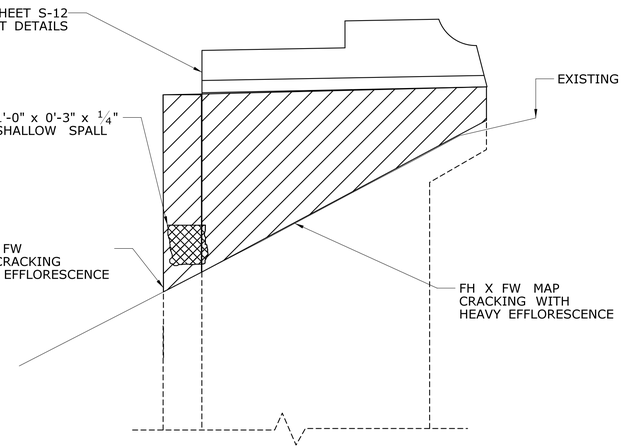


## WINGWALL 1A

SCALE: 3/16"=1'-0"

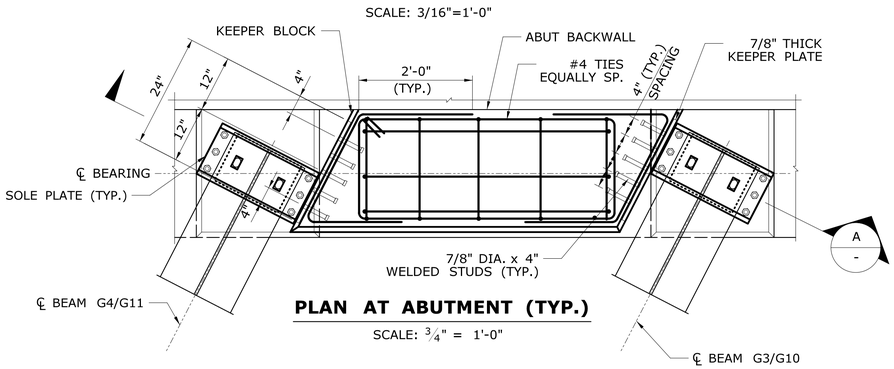


## PLAN AT ABUTMENT (TYP.)

SCALE: 3/4" = 1'-0"

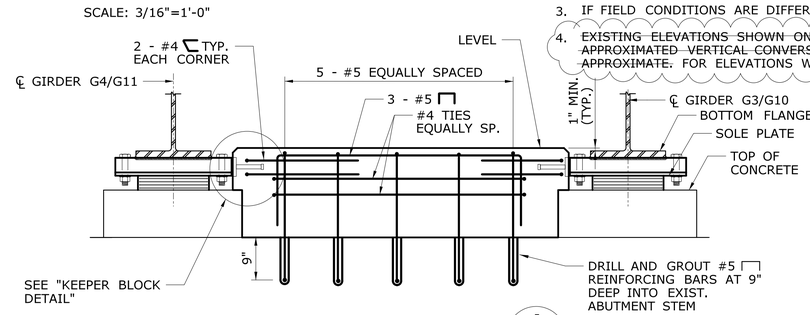


## SECTION

SCALE: 3/4" = 1'-0"

## CONCRETE KEEPER BLOCK NOTES:

1. THE CONCRETE KEEPER BLOCK SHALL BE CLASS "F" CONCRETE. REINFORCEMENT SHALL BE ASTM A615, GRADE 60 - EPOXY COATED.
2. THE SURFACE ON WHICH THE CONCRETE KEEPER BLOCK IS TO BE POURED SHALL BE INTENTIONALLY ROUGHED TO A DEPTH OF 1/4".
3. THE CONTRACTOR SHALL FORM THE KEEPER BLOCK TO MATCH THE FACE OF THE EXISTING ABUTMENT/PIER.
4. THE CONCRETE KEEPER BLOCK SHALL BE CONSTRUCTED AFTER THE ADJACENT BEARINGS HAVE BEEN INSTALLED.
5. THE COST OF CONSTRUCTING THE CONCRETE KEEP BLOCKS, INCLUDING THE CONCRETE, ROUGHENING THE EXISTING SURFACE, REINFORCING, DRILLING AND GROUTING REINFORCING STEEL AND STEEL KEEPER PLATES WITH WELDED STUDS SHALL BE PAID FOR UNDER THE ITEM "CONSTRUCT CONCRETE KEEPER BLOCKS"
6. THE STEEL KEEPER PLATES SHALL CONFORM TO ASTM A36. THE KEEPER PLATE ASSEMBLY (PLATE AND STUDS) SHALL BE HOT DIPPED GALVANIZED AFTER FABRICATION IN ACCORDANCE TO THE REQUIREMENTS OF SUB ARTICLE M.06.03 (GALVANIZING)
7. PRIOR TO PLACING THE CONCRETE, THE EXISTING CONCRETE SURFACES AND REINFORCEMENT SHALL BE CLEANED AND FREE OF DIRT, DUST, LOOSE RUST, AND OTHE FOREIGN MATTER. THE ROUGHED AND CLEANED CONCRETE SURFACES SHALL BE DAMPENED WITH WATER JUST PRIOR TO PLACING THE CONCRETE. ANY STANDING WATER SHALL BE REMOVED.
8. ALL REINFORCEMENT SHALL HAVE 2" MIN. COVER.
9. THE CONTRACTOR SHALL TAKE ALL PRECAUTIONS TO AVOID DAMAGING EXISTING REINFORCING. IF EXISTING REINFORCING BARS ARE ENCOUNTERED DURING THE DRILLING OPERATION, THE HOLE SHALL BE RELOCATED TO CLEAR THE EXISTING REINFORCING. ABANDONED HOLES SHALL BE FILLED WITH CHEMICAL ANCHOR MATERIAL.
10. DEPTH AND DIAMETER OF THE DRILL HOLE FOR THE CHEMICAL ANCHORAGE TO BE AS REQUIRED BY THE MANUFACTURER TO DEVELOP FULL TENSILE STRENGTH OF THE BAR (9" MINIMUM).
11. TOP OF KEEPER BLOCK ELEVATIONS SHOWN ARE APPROXIMATE AND FOR ESTIMATION PURPOSES ONLY. CONTRACTOR TO SET TOP OF KEEPER BLOCK 1" ABOVE HIGHEST FLANGE.

## NOTES

1. FOR SUBSTRUCTURE CONCRETE REPAIR DETAILS SEE DRAWING NO. S-13
2. DEFICIENCIES PROVIDED ON THIS SHEET TAKEN FROM FIELD INSPECTION REPORT PERFORMED BY AI ENGINEERS ON ARPIL 2017.
3. IF FIELD CONDITIONS ARE DIFFERENT THE CONTRACTOR SHALL INFORM THE ENGINEER.
4. ~~EXISTING ELEVATIONS SHOWN ON THESE PLANS ARE TAKEN FROM THE EXISTING PLANS (1929 DATUM). SUBTRACT COMPUTER APPROXIMATED VERTICAL CONVERSION FACTOR OF 0.974' TO ARRIVE AT THE 1988 DATUM. EXISTING ELEVATIONS ARE ALL APPROXIMATE. FOR ELEVATIONS WITH "*" SEE NOTE ON S-02~~

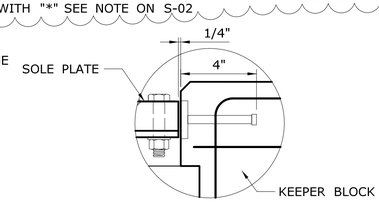


## KEEPER BLOCK DETAIL (TYP.)

SCALE: 1 1/2" = 1'-0"

## LEGEND

- SPALL AREA
- SPALL AREA W/ EXPOSED REBAR
- SHALLOW REINFORCING
- HOLLOW AREA
- MAPCRACKING

## ADDENDUM NO. 2

| REV. | DATE | REVISION DESCRIPTION | SHEET NO. |
|---|---|---|---|
| 1 | 10/22/18 | CHANGED ELEVATION NOTES - ADDENDUM 2 | |

THE INFORMATION, INCLUDING ESTIMATED QUANTITIES OF WORK, SHOWN ON THESE SHEETS IS BASED ON LIMITED INVESTIGATIONS BY THE STATE AND IS IN NO WAY WARRANTED TO INDICATE THE CONDITIONS OF ACTUAL QUANTITIES OF WORK WHICH WILL BE REQUIRED.

Plotted Date: 10/31/2018

DESIGNER/DRAFTER: DLW
CHECKED BY: SHH
SCALE AS NOTED

STATE OF CONNECTICUT
DEPARTMENT OF TRANSPORTATION

Filename: ...\S_07_SB_MSH_BR00255_0152_0158_ABUTMENT_NO._1_REPAIR_LOCATIONS.dgn

SIGNATURE/BLOCK: STATE OF CONNECTICUT JANET H. HARRIS No. 14313 LICENSED PROFESSIONAL ENGINEER

FUSS & O'NEILL
146 Hartford Road
Manchester, CT 06040
(860)646-2469

PROJECT TITLE:
**REHABILITATION OF BRIDGE NO. 00255 I-395 OVER ROUTE 85**

TOWN: **WATERFORD**

DRAWING TITLE: **ABUTMENT 1 REPAIR LOCATIONS**

PROJECT NO. 152-158
DRAWING NO. S-07
SHEET NO. 04.07.A2

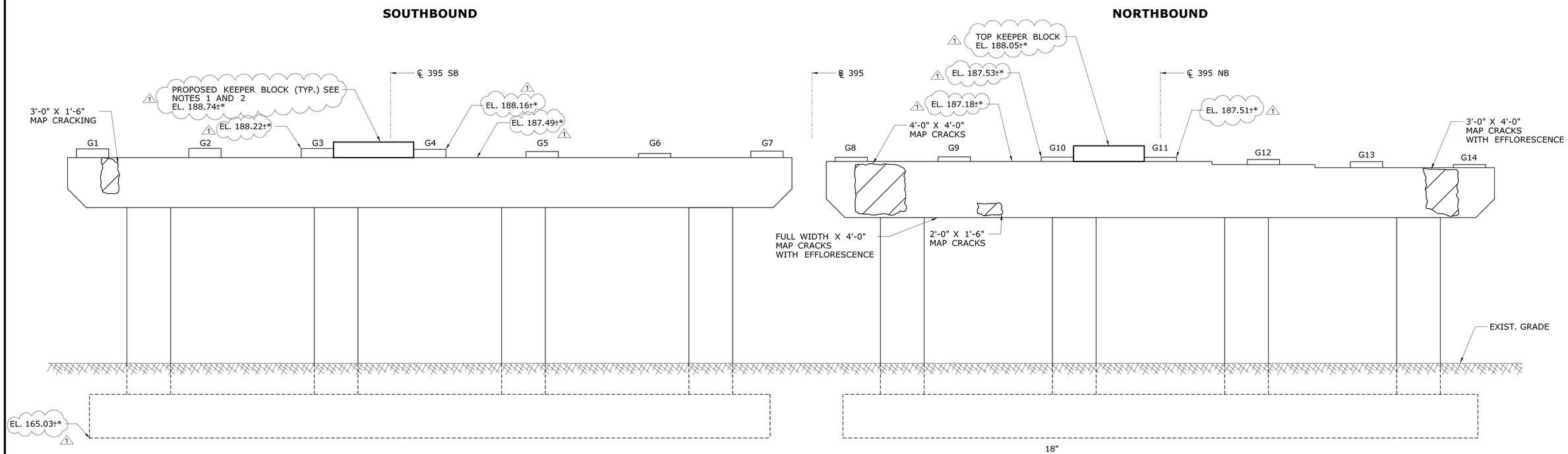


## PIER - WEST ELEVATION

SCALE: 1/4" = 1'-0"

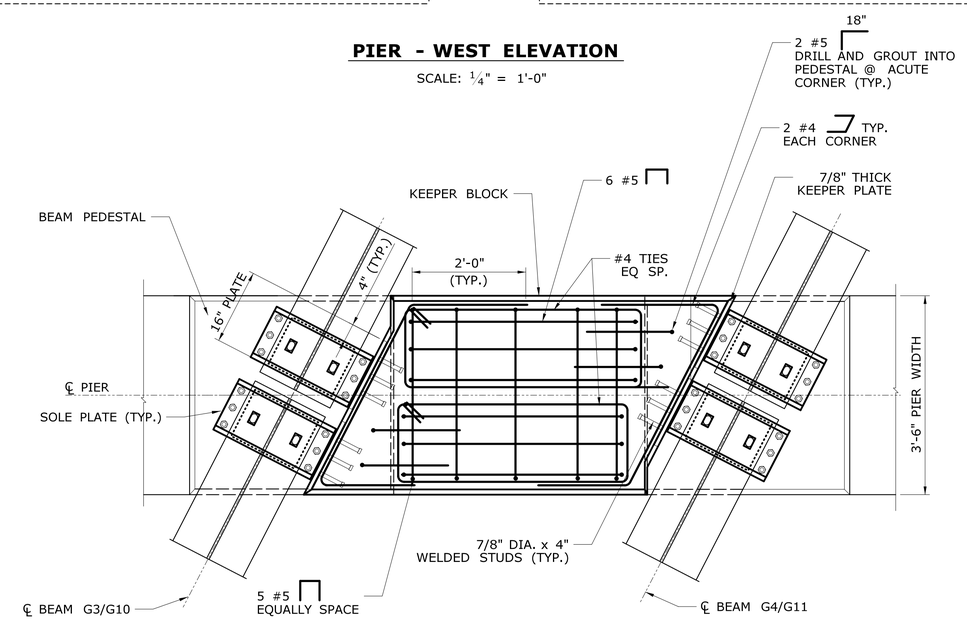


## KEEPER BLOCK PLAN AT PIER (TYP.)

SCALE: 3/4" = 1'-0"

## NOTES

1. KEEPER BLOCK ELEVATION SIMILAR TO ABUTMENT - SEE DRAWING S-07 FOR DETAILS
2. KEEPER BLOCK AT PIER TO BE FULL WIDTH OF THE PIER CAP (3.5')
3. DEFICIENCIES PROVIDED ON THIS SHEET TAKEN FROM FIELD INSPECTION PERFORMED BY AI ENGINEERS IN APRIL 2017.
4. IF FIELD CONDITIONS ARE DIFFERENT THE CONTRACTOR SHALL INFORM THE ENGINEER.
5. ~~EXISTING ELEVATIONS SHOWN ON THESE PLANS ARE TAKEN FROM THE EXISTING PLANS (1929 DATUM). SUBTRACT A COMPUTER APPROXIMATED VERTICAL CONVERSION FACTOR OF 0.974' TO ARRIVE AT THE 1988 DATUM. EXISTING ELEVATIONS ARE ALL APPROXIMATE.~~
   FOR ELEVATIONS WITH "*" SEE NOTE ON S-02
6. TOP OF KEEPER BLOCK ELEVATIONS SHOWN ARE APPROXIMATE AND FOR ESTIMATION PURPOSES ONLY. CONTRACTOR TO SET TOP OF KEEPER BLOCK 1" ABOVE HIGHEST FLANGE.

## LEGEND

- SPALL AREA
- SPALL AREA W/ EXPOSED REBAR
- SCALE AREA
- SHALLOW REINFORCING
- HOLLOW AREA
- MAPCRACKING

**ADDENDUM NO. 2**

| REV. | DATE | REVISION DESCRIPTION | SHEET NO. |
|---|---|---|---|
| 1 | 10/22/18 | CHANGED ELEVATION NOTES - ADDENDUM 2 | |

THE INFORMATION, INCLUDING ESTIMATED QUANTITIES OF WORK, SHOWN ON THESE SHEETS IS BASED ON LIMITED INVESTIGATIONS BY THE STATE AND IS IN NO WAY WARRANTED TO INDICATE THE CONDITIONS OF ACTUAL QUANTITIES OF WORK WHICH WILL BE REQUIRED.

Plotted Date: 10/31/2018

DESIGNER/DRAFTER: DLW
CHECKED BY: SHH
SCALE AS NOTED

STATE OF CONNECTICUT
DEPARTMENT OF TRANSPORTATION

Filename: ...\S_08_SB_MSH_BR00255_0152_0158_PIER_REPAIR_LOCATIONS_SOUTHBOUND.dgn

SIGNATURE/BLOCK:
STATE OF CONNECTICUT
JONATHAN H. HAMILTON
No. 14313
LICENSED PROFESSIONAL ENGINEER

FUSS & O'NEILL
146 Hartford Road
Manchester, CT 06040
(860)646-2469

PROJECT TITLE:
**REHABILITATION OF BRIDGE NO. 00255 I-395 OVER ROUTE 85**

TOWN: **WATERFORD**

DRAWING TITLE: **PIER- WEST ELEV. REPAIR LOCATIONS**

PROJECT NO. **152-158**
DRAWING NO. **S-08**
SHEET NO. **04.08.A2**

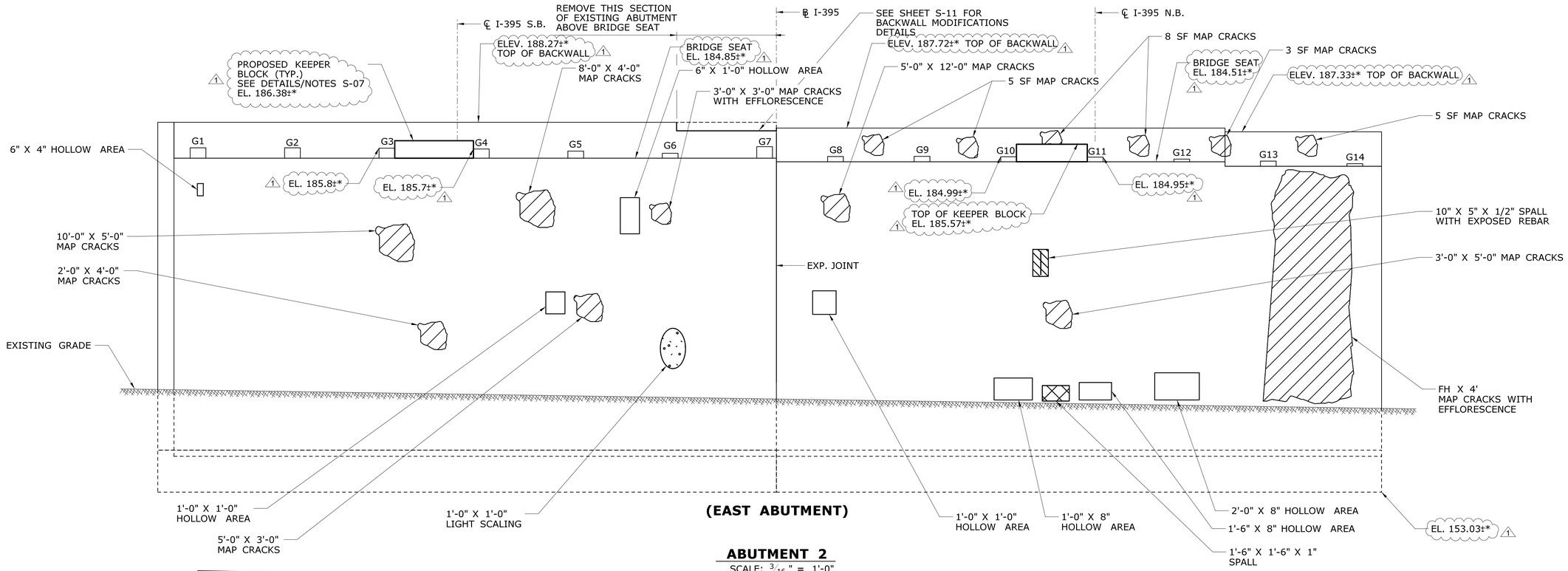


**(EAST ABUTMENT)**

**ABUTMENT 2**

SCALE: 3/16" = 1'-0"

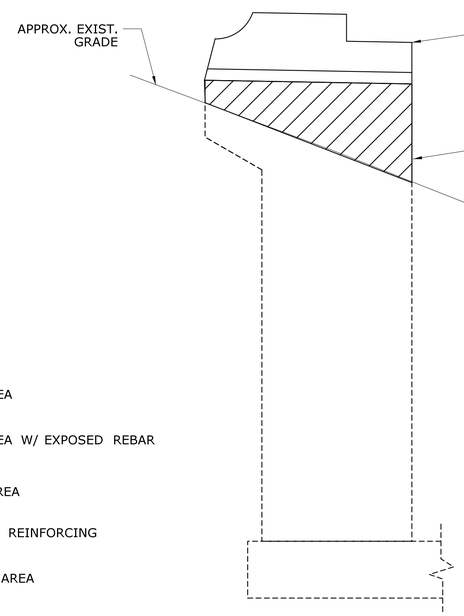


**WINGWALL 2B**

SCALE: 3/16" = 1'-0"

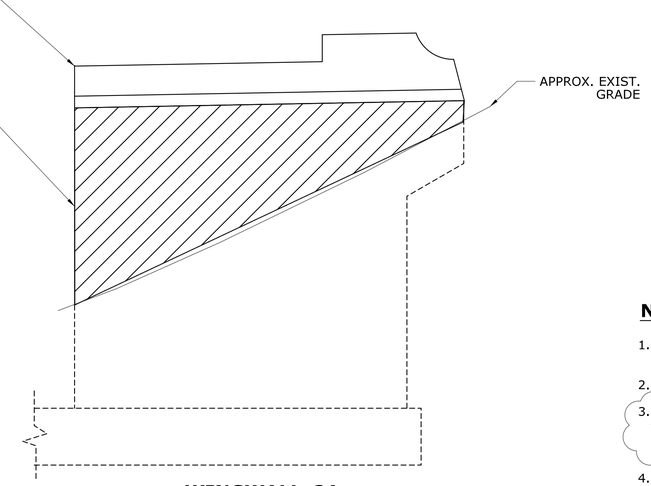


**WINGWALL 2A**

SCALE: 3/16"=1'-0"

## LEGEND

- SPALL AREA
- SPALL AREA W/ EXPOSED REBAR
- SCALE AREA
- SHALLOW REINFORCING
- HOLLOW AREA
- MAPCRACKING

## NOTES

1. DEFICIENCIES PROVIDED ON THIS SHEET TAKEN FROM FIELD INSPECTION REPORT PERFORMED BY AI ENGINEERS IN APRIL 2017.
2. IF FIELD CONDITIONS ARE DIFFERENT THE CONTRACTOR SHALL INFORM THE ENGINEER.
3. EXISTING ELEVATIONS SHOWN ON THESE PLANS ARE TAKEN FROM THE EXISTING PLANS (1929 DATUM). SUBTRACT A COMPUTER APPROXIMATED VERTICAL CONVERSION FACTOR OF 0.974' TO ARRIVE AT THE 1988 DATUM. EXISTING ELEVATIONS ARE ALL APPROXIMATE. FOR ELEVATIONS WITH A "*" SEE NOTE ON S2.
4. TOP OF KEEPER BLOCK ELEVATIONS SHOWN ARE APPROXIMATE AND FOR ESTIMATION PURPOSES ONLY. CONTRACTOR TO SET TOP OF KEEPER BLOCK 1" ABOVE HIGHEST FLANGE.

**ADDENDUM NO. 2**

| REV. | DATE | REVISION DESCRIPTION | SHEET NO. |
|---|---|---|---|
| 1 | 10/22/18 | CHANGED ELEVATION NOTES - ADDENDUM 2 | |

THE INFORMATION, INCLUDING ESTIMATED QUANTITIES OF WORK, SHOWN ON THESE SHEETS IS BASED ON LIMITED INVESTIGATIONS BY THE STATE AND IS IN NO WAY WARRANTED TO INDICATE THE CONDITIONS OF ACTUAL QUANTITIES OF WORK WHICH WILL BE REQUIRED.

Plotted Date: 10/23/2018

DESIGNER/DRAFTER: DLW

CHECKED BY: SHH

SCALE AS NOTED

STATE OF CONNECTICUT
DEPARTMENT OF TRANSPORTATION

Filename: ...\S_10_SB_MSH_BR00255_0152_0158_ABUTMENT_2_REPAIR_LOCATIONS.dgn

SIGNATURE/BLOCK: STATE OF CONNECTICUT, JUNAID H. HAFIZ, No. 18813, LICENSED PROFESSIONAL ENGINEER

FUSS & O'NEILL
146 Hartford Road
Manchester, CT 06040
(860)646-2469

PROJECT TITLE:
**REHABILITATION OF BRIDGE NO. 00255 I-395 OVER ROUTE 85**

TOWN: **WATERFORD**

DRAWING TITLE: **ABUTMENT 2 REPAIR LOCATIONS**

PROJECT NO. **152-158**

DRAWING NO. **S-10**

SHEET NO. **04.10.A2**

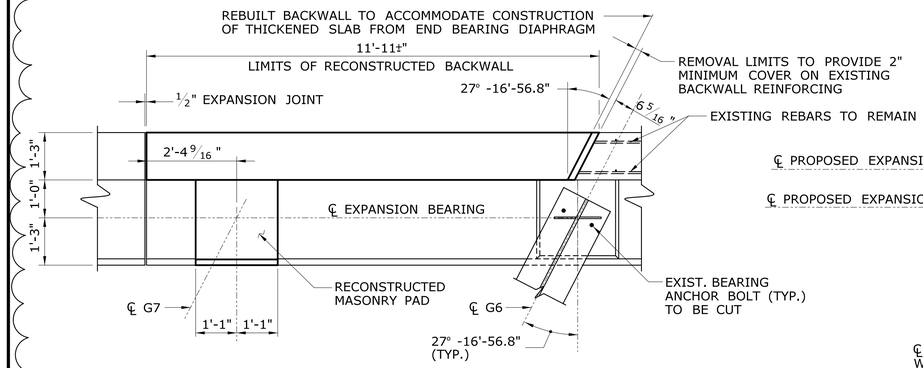


**PLAN**

SCALE: ½" = 1'-0"

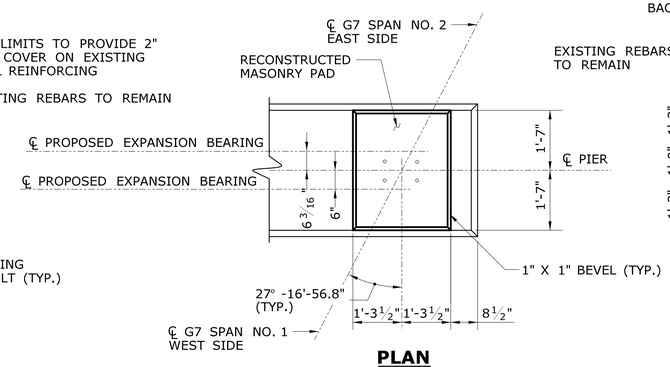


**PLAN**

SCALE: ½" = 1'-0"

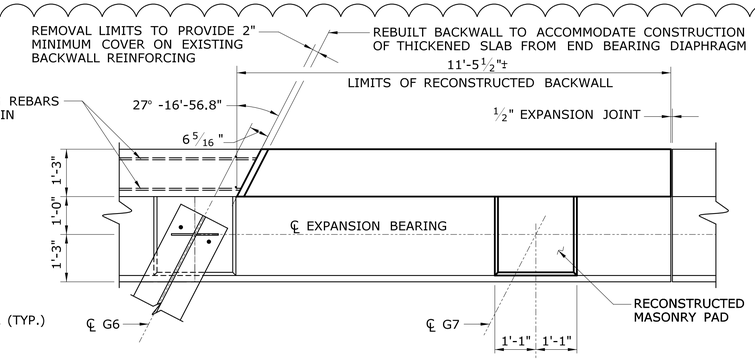


**PLAN**

SCALE: ½" = 1'-0"

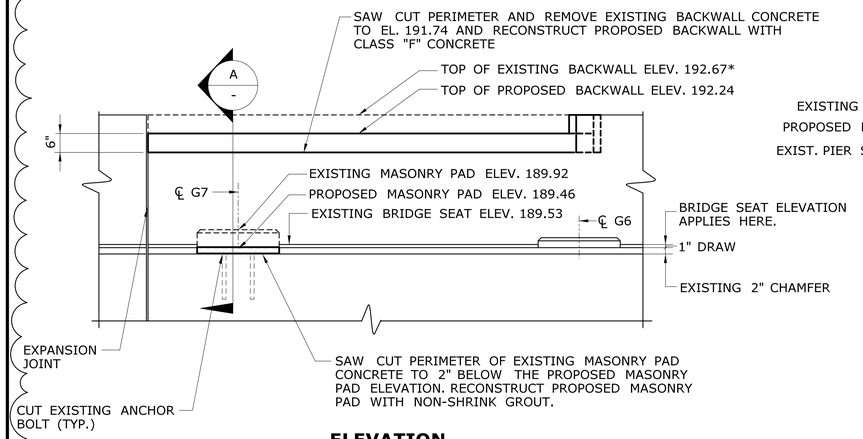


**ELEVATION**

SCALE: ½" = 1'-0"

NOTE: EXISTING CONCRETE SURFACE IN CONTACT WITH NEW CONCRETE TO BE ROUGHENED.

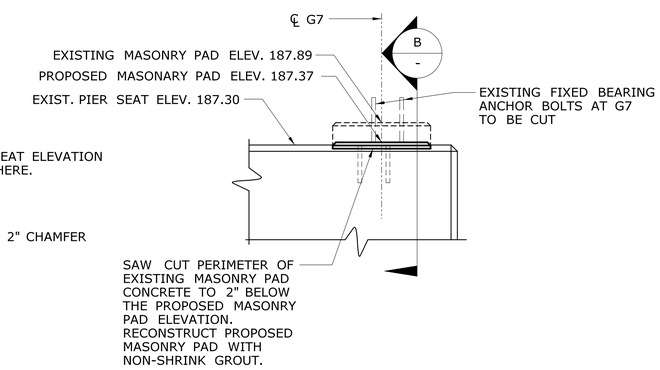


**ELEVATION**

SCALE: ½" = 1'-0"

NOTE: EXISTING CONCRETE SURFACE IN CONTACT WITH NEW CONCRETE TO BE ROUGHENED.

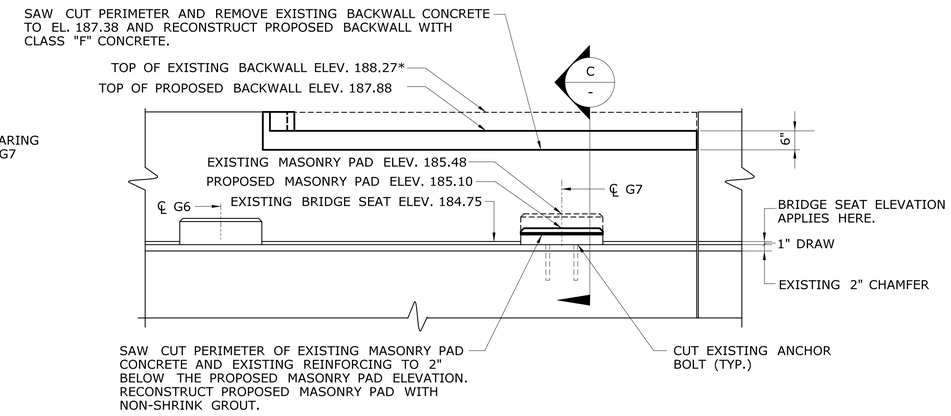


**ELEVATION**

SCALE: ½" = 1'-0"

NOTE: EXISTING CONCRETE SURFACE IN CONTACT WITH NEW CONCRETE TO BE ROUGHENED.

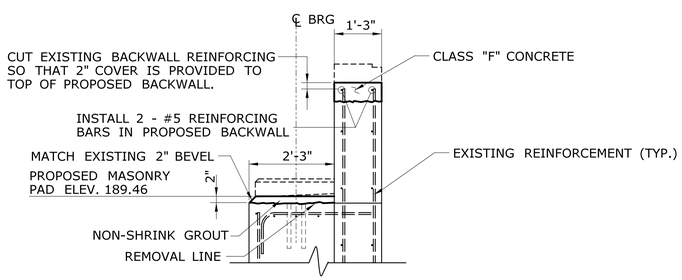


**SECTION** A

SCALE: ½" = 1'-0"

**ABUTMENT NO. 1**

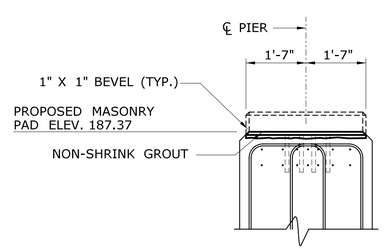


**SECTION** B

SCALE: ½" = 1'-0"

**PIER**

## NOTES

1. WORK FOR SAW-CUTTING AND REMOVAL OF EXISTING CONCRETE, CUTTING EXISTING REBAR, AND POURING NON-SHRINK GROUT WILL BE PAID UNDER ITEM "MODIFY CONCRETE BEARING PAD".
2. ELEVATIONS PROVIDED ON THIS SHEET SHALL BE VERIFIED BY THE CONTRACTOR BEFORE REMOVAL AND CONSTRUCTION OPERATIONS BEGIN. IF FIELD CONDITIONS ARE DIFFERENT PLEASE COORDINATE WITH THE ENGINEER.
3. FOR ELEVATIONS FOLLOWED WITH AN ASTERISK (*), SEE NOTE ON DRAWING NO. S-2.

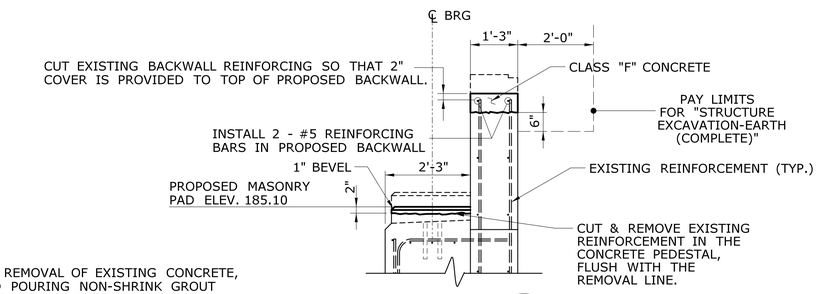


**SECTION** C

SCALE: ½" = 1'-0"

**ABUTMENT NO. 2**

**ADDENDUM NO. 2**

| REV. | DATE | REVISION DESCRIPTION | SHEET NO. |
|---|---|---|---|
| 2 | 10/31/18 | MASONRY PAD ELEVATIONS REVISED | |

THE INFORMATION, INCLUDING ESTIMATED QUANTITIES OF WORK, SHOWN ON THESE SHEETS IS BASED ON LIMITED INVESTIGATIONS BY THE STATE AND IS IN NO WAY WARRANTED TO INDICATE THE CONDITIONS OF ACTUAL QUANTITIES OF WORK WHICH WILL BE REQUIRED.

Plotted Date: 10/31/2018

DESIGNER/DRAFTER: JM

CHECKED BY: MS

SCALE AS NOTED

STATE OF CONNECTICUT
DEPARTMENT OF TRANSPORTATION

Filename: ...\S_11REVISED_SB_MSH_BR00255_0152_0158_ABUTMENT_AND_PIER_MODIFICATIONS_AT_G7_ADDENDUM2.dgn

SIGNATURE/BLOCK:

AI Engineers, Inc.
919 MIDDLE STREET
MIDDLETOWN, CT 06457
Phone: (860) 635-7740
Fax: (860) 635-7312

PROJECT TITLE:
**REHABILITATION OF BRIDGE NO. 00255**
**I-395 OVER ROUTE 85**

TOWN: **WATERFORD**

DRAWING TITLE:
**ABUTMENT AND PIER MODIFICATIONS AT G7**

PROJECT NO. **152-158**

DRAWING NO. **S-11**

SHEET NO. **04.11.A2**

NOTES:

1. PRECAST CONCRETE DECK PANELS LS1 - LS4 SHOWN ON DWG. NO. S-18 ARE SIMILAR TO S1 - S4 IN SIZE. FOR LS1 - LS4, NEOPRENE BOND BREAKER SHALL BE INSTALLED ON TOP OF THE GIRDERS FOR THE WIDTH OF THE DEBONDED ZONE PRIOR TO INSTALLING PRECAST CONCRETE DECK PANELS LS1 - LS4. THE SHEAR CONNECTOR BLOCK-OUTS IN LS1 - LS4 SHALL BE FILLED WITH GROUT. THERE SHALL BE NO SHEAR CONNECTORS PLACED IN BLOCK-OUTS OF LS1 - LS4.
2. PRECAST CONCRETE DECK PANELS S1W, S1E, S2W, S2E, S3W, S3E, S4W & S4E ARE SIMILAR IN SIZE TO S1 - S4, EXCEPT THEY WILL RECEIVE BLOCK-OUTS FOR POST-TENSIONING STRESSING AND ANCHORAGE ENDS.

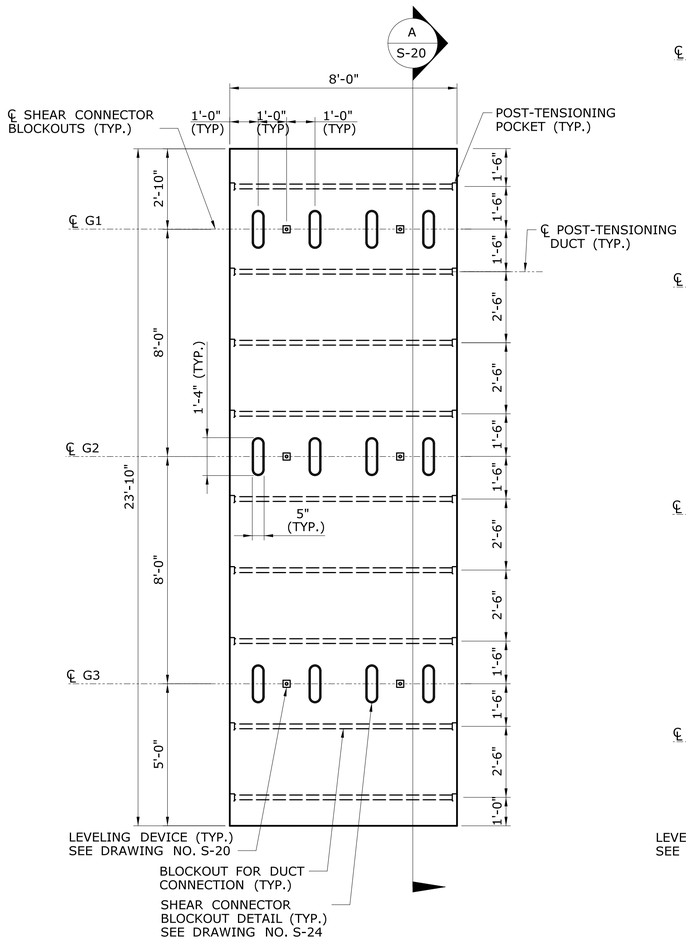


**S1**
SCALE: 3/8" = 1'-0"

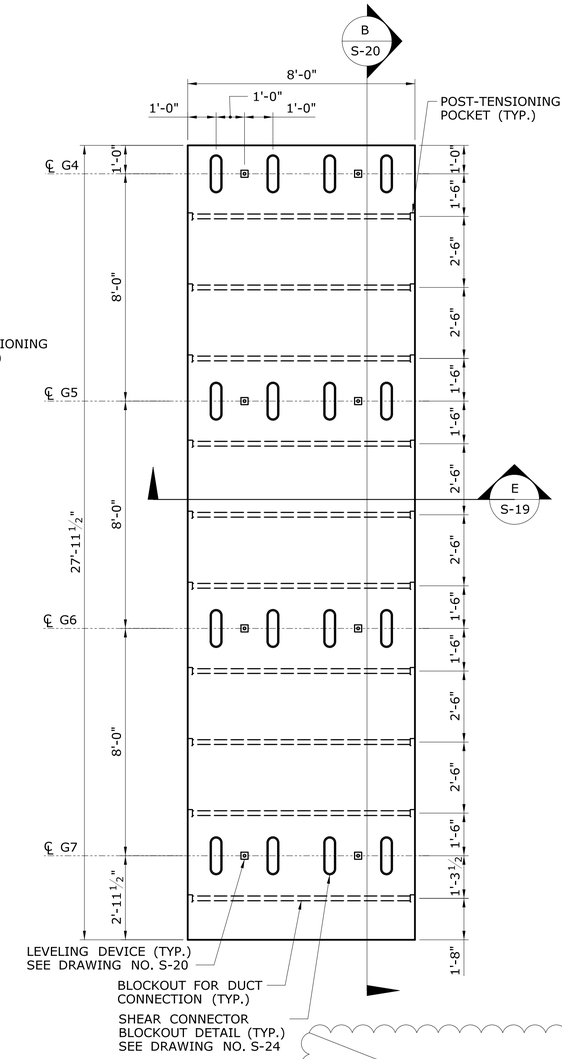


**S2**
SCALE: 3/8" = 1'-0"

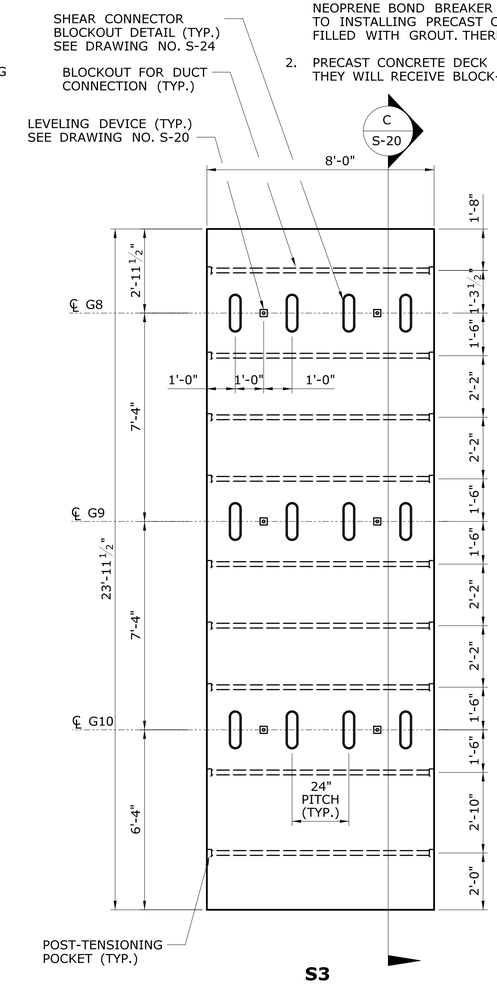


**S3**
SCALE: 3/8" = 1'-0"

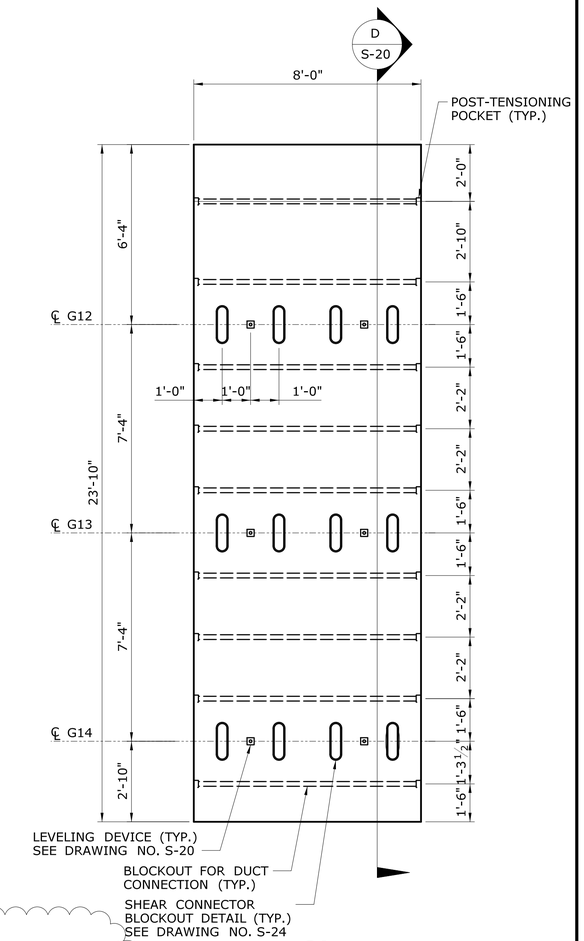


**S4**
SCALE: 3/8" = 1'-0"

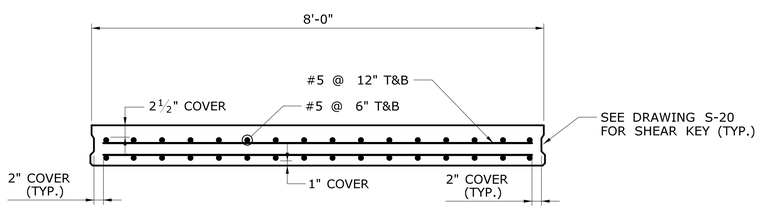


**SECTION** E
SCALE: 3/4" = 1'-0" -

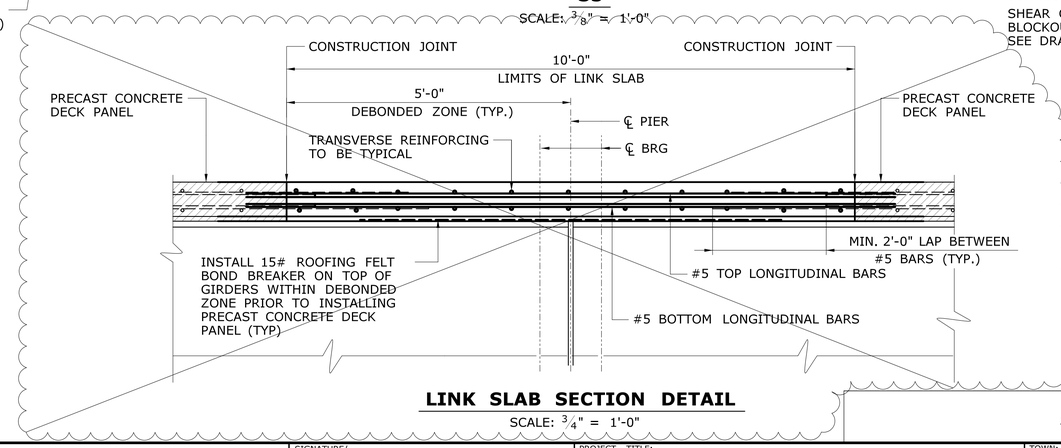


**LINK SLAB SECTION DETAIL**
SCALE: 3/4" = 1'-0"

**ADDENDUM NO. 2**

| REV. | DATE | REVISION DESCRIPTION | SHEET NO. |
|---|---|---|---|
| 1 | 10/22/18 | REVISED LINK SLAB SECTION DETAIL, ADDED NEW SHEET | |

THE INFORMATION, INCLUDING ESTIMATED QUANTITIES OF WORK, SHOWN ON THESE SHEETS IS BASED ON LIMITED INVESTIGATIONS BY THE STATE AND IS IN NO WAY WARRANTED TO INDICATE THE CONDITIONS OF ACTUAL QUANTITIES OF WORK WHICH WILL BE REQUIRED.

Plotted Date: 10/22/2018

DESIGNER/DRAFTER: TLB
CHECKED BY: ASG
SCALE AS NOTED

STATE OF CONNECTICUT
DEPARTMENT OF TRANSPORTATION

Filename: ...\S_19_SB_MSH_BR00255_0152_0158_PRECAST_SLAB_DETAILS_1.dgn

SIGNATURE/BLOCK:

AI Engineers, Inc.
919 MIDDLE STREET
MIDDLETOWN, CT 06457
Phone: (860) 635-7740
Fax: (860) 635-7312

PROJECT TITLE:
**REHABILITATION BRIDGE NO. 00255**
**I-395 OVER ROUTE 85**

TOWN: **WATERFORD**

DRAWING TITLE:
**PRECAST CONCRETE DECK PANEL DETAILS - 1**

PROJECT NO. **152-158**
DRAWING NO. **S-19**
SHEET NO. **04.19.A2**

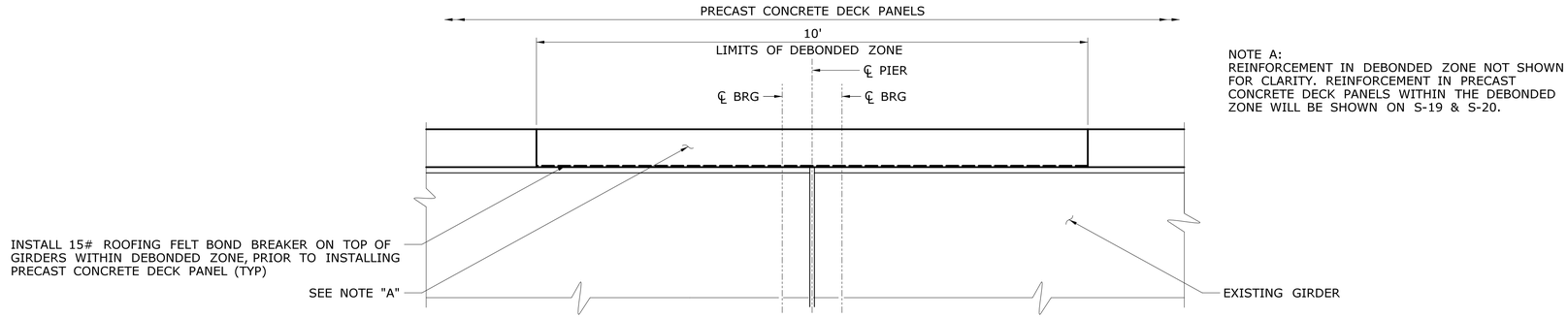


NOTE A:
REINFORCEMENT IN DEBONDED ZONE NOT SHOWN FOR CLARITY. REINFORCEMENT IN PRECAST CONCRETE DECK PANELS WITHIN THE DEBONDED ZONE WILL BE SHOWN ON S-19 & S-20.

## LINK SLAB & DEBONDED ZONE

SCALE: 3/4" = 1'-0"

**NEW SHEET ADDED BY ADDENDUM NO. 2**

| REV. | DATE | REVISION DESCRIPTION | SHEET NO. |
|---|---|---|---|
| 1 | 10/31/18 | ADDED DETAIL | |

THE INFORMATION, INCLUDING ESTIMATED QUANTITIES OF WORK, SHOWN ON THESE SHEETS IS BASED ON LIMITED INVESTIGATIONS BY THE STATE AND IS IN NO WAY WARRANTED TO INDICATE THE CONDITIONS OF ACTUAL QUANTITIES OF WORK WHICH WILL BE REQUIRED.

Plotted Date: 10/31/2018

DESIGNER/DRAFTER: MRG
CHECKED BY: ASG
SCALE AS NOTED

STATE OF CONNECTICUT
DEPARTMENT OF TRANSPORTATION

Filename: ...\S_19A_SB_MSH_BR00255_0152_0158_LINK_SLAB_DETAIL_ADDENDUM_2.dgn

SIGNATURE/ BLOCK:

AI Engineers, Inc.
919 MIDDLE STREET
MIDDLETOWN, CT 06457
Phone: (860) 635-7740
Fax: (860) 635-7312

PROJECT TITLE:
**REHABILITATION BRIDGE NO. 00255**
**I-395 OVER ROUTE 85**

TOWN: **WATERFORD**

DRAWING TITLE: **LINK SLAB DETAIL**

PROJECT NO. **152-158**
DRAWING NO. **S-19A**
SHEET NO. **04.19A.A2**