RUMBLE STRIPS - AUTOMATED

I-395 SB STA. 182+30 LT TO STA. 183+58 LT
I-395 SB STA. 182+30 RT TO STA. 183+80 RT
I-395 SB STA. 186+00 LT TO STA. 188+60 LT
I-395 SB STA. 186+00 RT TO STA. 188+60 RT

RUMBLE STRIPS - AUTOMATED

I-395 NB STA. 182+70 LT TO STA. 183+80 LT
I-395 NB STA. 182+70 RT TO STA. 184+10 RT
I-395 NB STA. 186+30 LT TO STA. 188+00 LT
I-395 NB STA. 186+48 RT TO STA. 188+00 RT

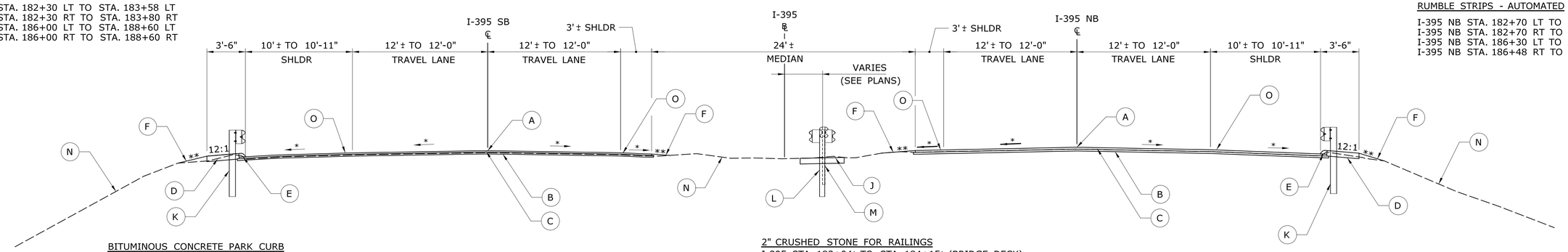

BITUMINOUS CONCRETE PARK CURB

I-395 SB STA. 182+30 LT TO STA. 183+31 LT
I-395 SB STA. 183+36 LT TO STA. 183+63 LT (BRIDGE PARAPET)
I-395 SB STA. 185+86 LT (BRIDGE PARAPET) TO STA. 187+30 LT
I-395 SB STA. 187+35 LT TO STA. 188+60 LT

METAL BEAM GUIDERAIL (TYPE R-B MASH)

I-395 SB STA. 176+64 LT TO STA. 183+50 LT
I-395 SB STA. 186+06 LT TO STA. 188+96 LT

EXISTING THREE CABLE GUIDERAIL

I-395 SB STA. 176+40 LT TO STA. 183+63 LT

EXISTING METAL BEAM GUIDERAIL (TYPE R-I)

I-395 SB STA. 185+86 LT TO STA. 189+19 LT

2" CRUSHED STONE FOR RAILINGS

I-395 STA. 183+04± TO STA. 184+15± (BRIDGE DECK)
I-395 STA. 185+98± (BRIDGE DECK) TO STA. 187+12±

NOTE:
EXISTING THREE-CABLE GUIDERAIL AND METAL BEAM GUIDERAIL (TYPE R-I) ARE TO BE REMOVED AND ARE NOT SHOWN ON TYPICAL CROSS SECTION VIEW FOR CLARITY.

BITUMINOUS CONCRETE PARK CURB

I-395 NB STA. 182+70 RT TO STA. 184+16 RT (BRIDGE PARAPET)
I-395 NB STA. 186+41 RT (BRIDGE PARAPET) TO STA. 187+47 RT
I-395 NB STA. 187+52 RT TO STA. 188+00 RT

METAL BEAM GUIDERAIL (TYPE R-B MASH)

I-395 NB STA. 181+43 RT TO STA. 183+97 RT
I-395 NB STA. 186+54 RT TO STA. 192+52 RT

EXISTING METAL BEAM GUIDERAIL (TYPE R-I)

I-395 NB STA. 181+20 RT TO STA. 184+16 RT

EXISTING THREE CABLE GUIDERAIL

I-395 NB STA. 186+41 RT TO STA. 192+75 RT

TYPICAL CROSS SECTION I-395 BASELINE

I-395 NB STA. 182+70 TO STA. 184+30 (BRIDGE DECK) AND STA. 186+12 (BRIDGE DECK) TO STA. 188+00
I-395 SB STA. 182+30 TO STA. 184+02 (BRIDGE DECK) AND STA. 185+84 (BRIDGE DECK) TO STA. 188+60
SCALE: 1" = 5'

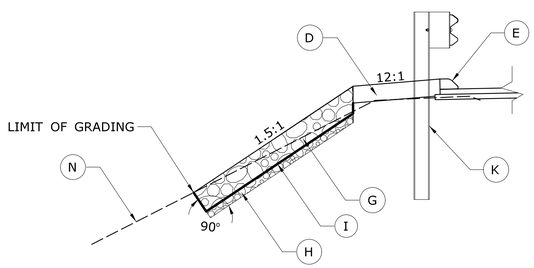

STONE SLOPE PROTECTION

I-395 SB STA. 185+86 LT TO STA. 186+50 LT
NOT TO SCALE

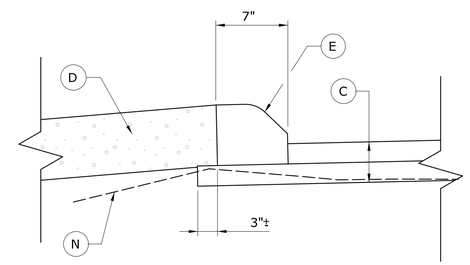

METHOD OF STEPPING PAVEMENT LIFTS

NOT TO SCALE

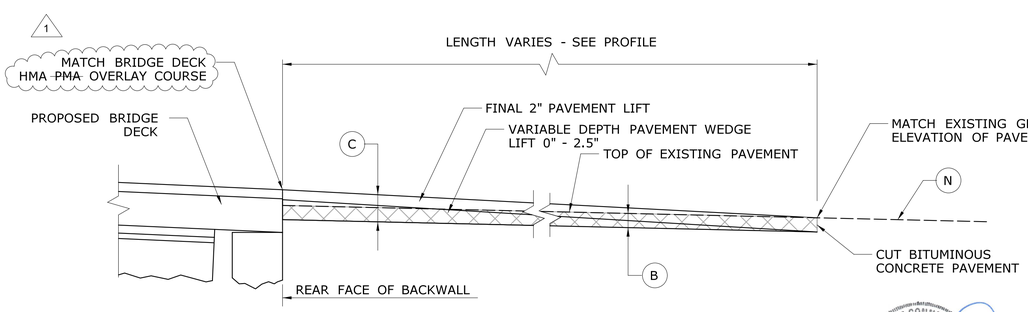

TYPICAL I-395 NB & SB PAVEMENT MILLING AND OVERLAY SECTION

NOT TO SCALE

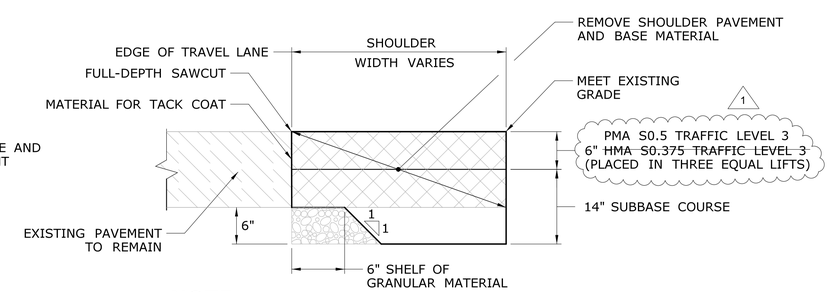

NOTE:
SHOULDER REPAIRS SHOULD OCCUR BEFORE MAINLINE DIVERSIONS

I-395 RAMP - SHOULDER REPAIR DETAIL

NOT TO SCALE

Digitally signed by Stuart Harris, P.E.
Date: 2018.11.01 12:49:15-04'00'

LEGEND

- (A) POINT OF APPLICATION OF GRADE
- (B) 2" PAVEMENT MILLING DEPTH
- (C) 2" HMA S0.375 TRAFFIC LEVEL 3 UNIFORM THICKNESS SURFACE LIFT ON HMA S0.375 TRAFFIC LEVEL 2 VARIABLE DEPTH WEDGE LIFTS (0" TO 2.5")
- (D) 6" PROCESSED AGGREGATE
- (E) 4" BITUMINOUS CONCRETE PARK CURB
- (F) 4" TOPSOIL AND TURF ESTABLISHMENT
- (G) 18" MODIFIED RIPRAP
- (H) 6" GRANUALR FILL
- (I) GEOTEXTILE (SEPARATION)
- (J) 6" OF 2" SIZED CRUSHED STONE
- (K) METAL BEAM RAIL (TYPE R-B MASH)
- (L) GUIDE RAIL TRANSITION - SEE MDS-01
- (M) EXISTING MEDIAN METAL BEAM RAIL (TYPE MD-I)
- (N) EXISTING GROUND
- (O) RUMBLE STRIPS - AUTOMATED

* MATCH EXISTING TRAVEL LANE AND SHOULDER CROSS SLOPES.

** FILL SLOPE VARIES FROM 12:1 TO 1.5:1 (MAX.). FOR SLOPES STEEPER THAN 2:1, USE STONE SLOPE PROTECTION (SEE DETAIL ON THIS SHEET).

ADDENDUM NO. 2

REV.	DATE	REVISION DESCRIPTION	SHEET NO.
1	10-31-18	REVISED DIMENSIONS FOR ADDENDUM 2	

THE INFORMATION, INCLUDING ESTIMATED QUANTITIES OF WORK, SHOWN ON THESE SHEETS IS BASED ON LIMITED INVESTIGATIONS BY THE STATE AND IS IN NO WAY WARRANTED TO INDICATE THE CONDITIONS OF ACTUAL QUANTITIES OF WORK WHICH WILL BE REQUIRED.

Plotted Date: 11/1/2018

DESIGNER/DRAFTER: K. PARISEAU
CHECKED BY: K. RADZIWON
SCALE AS NOTED

STATE OF CONNECTICUT
DEPARTMENT OF TRANSPORTATION

Filename: ...\HW_D2_170_3250Q_Waterford_I 395 over CT Route 85_BR00255_TYP-01.dgn

SIGNATURE/BLOCK:

FUSS & O'NEILL
146 Hartford Road
Manchester, CT 06040
(860)646-2469

PROJECT TITLE:
REHABILITATION OF BRIDGE No. 00255 I-395 OVER ROUTE 85

TOWN: **WATERFORD**

DRAWING TITLE: **TYPICAL SECTIONS**

PROJECT NO. **152-158**
DRAWING NO. **TYP-01**
SHEET NO. **03.07.A2**

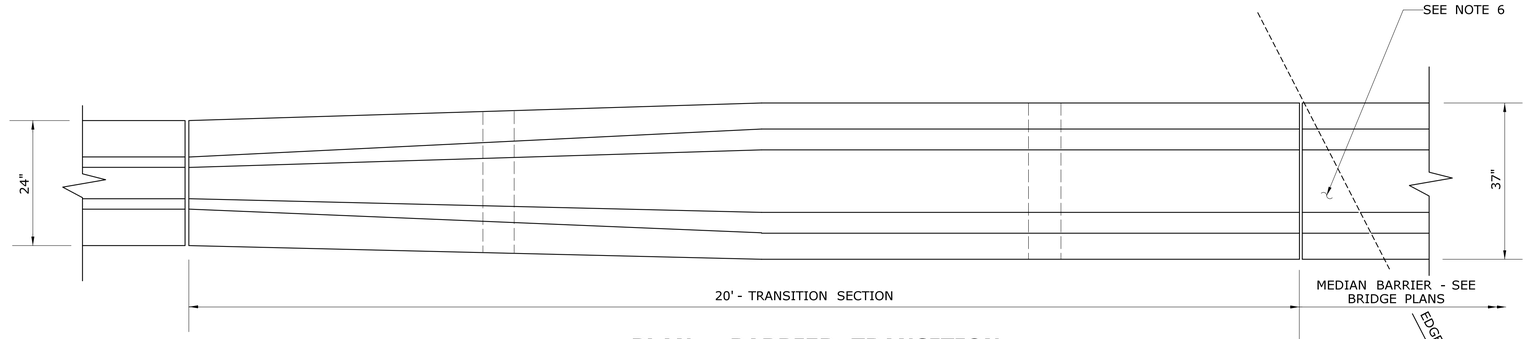

PLAN - BARRIER TRANSITION

GENERAL NOTES

1. ALTERNATE DESIGNS FOR THE LIFTING KEYS OR OTHER HANDLING DEVICES MAY BE SUBMITTED TO THE ENGINEER FOR APPROVAL.
2. SEE SHEET HW-821 03b & c FOR REINFORCING BARS NOT SHOWN.
3. FOR CONNECTION DETAILS SEE SHEET HW-821_07.
4. PRECAST UNITS SHALL BE COATED WITH PENETRATING SEALER.
5. THE FIRST AND LAST SECTIONS OF BARRIER SHALL NOT HAVE EXPOSED PROTRUDING DOWELS.
6. MEDIAN PARAPET TO OVERHANG BRIDGE DECK TO EXPOSE RIGHT ANGLE BLUNT END - SEE BRIDGE PLANS.
7. BARRIER TRANSITION SECTION TO BE PAID FOR UNDER ITEM "CONCRETE BARRIER TRANSITION SECTION".
8. ±10' OF TRANSITION SECTION TO BE PAID UNDER ITEM "PRECAST CONCRETE BARRIER CURB (24"x36")

NOTE: SECTION VIEW OF REINFORCEMENT SHOWN IN CROSS SECTIONS, SHEETS HWY-XSC-03 AND HWY-XSC-04

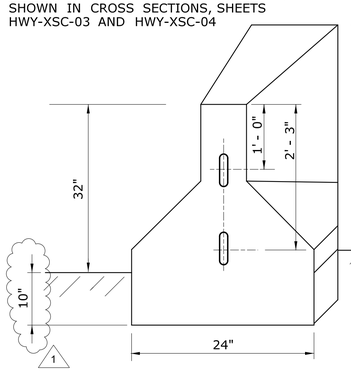

SECTION A -

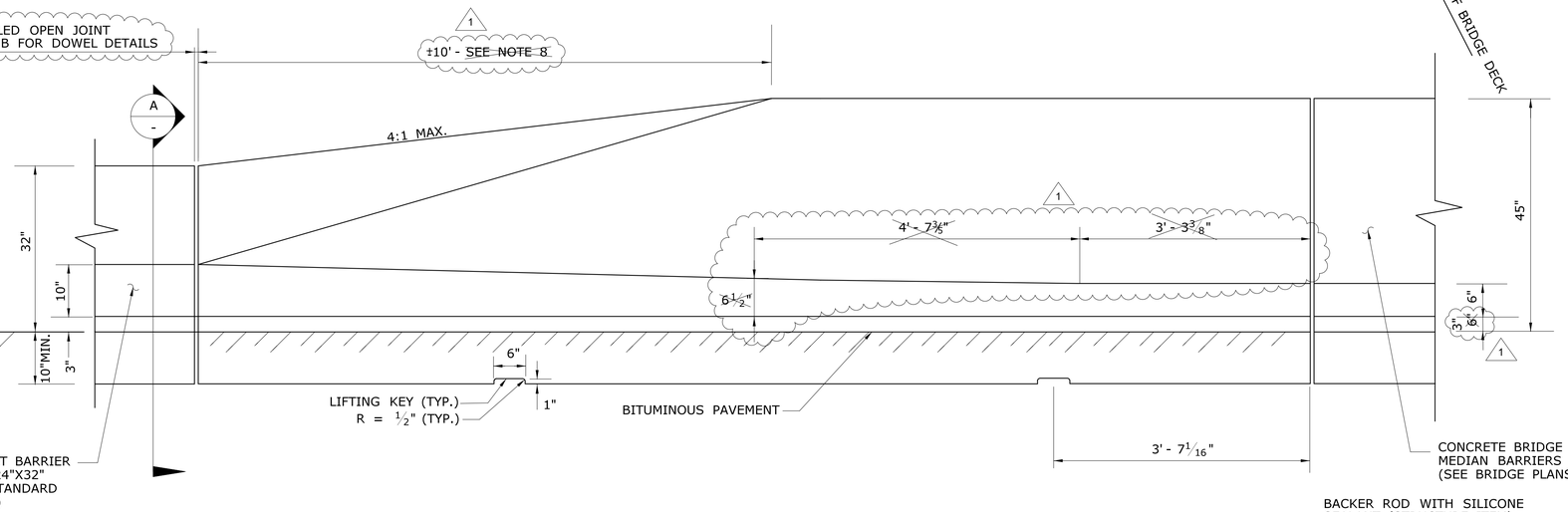

FRONT ELEVATION - BARRIER TRANSITION

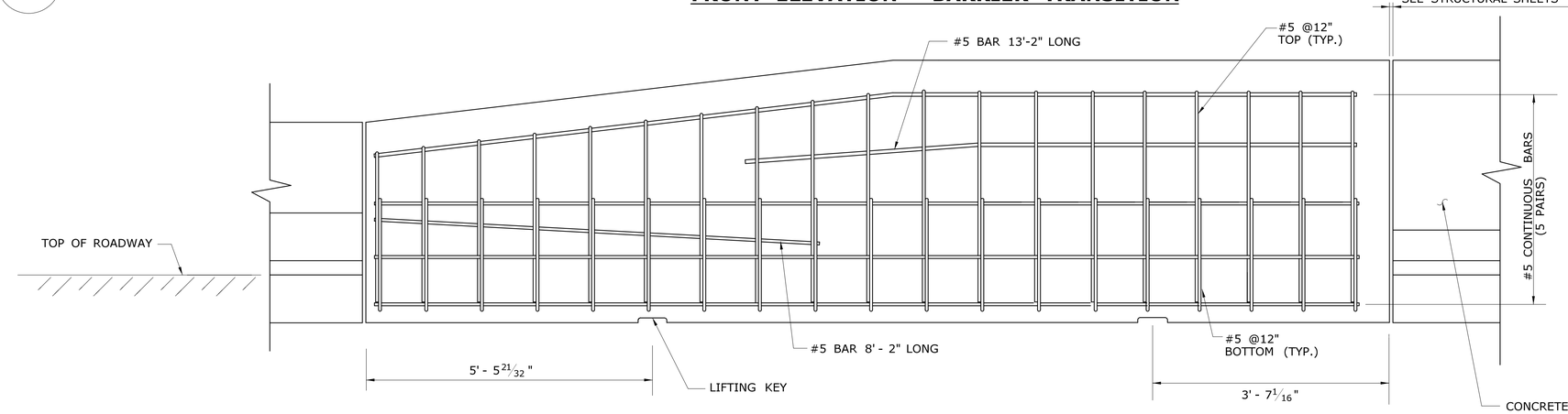

FRONT ELEVATION - TRANSITION BARRIER REINFORCEMENT

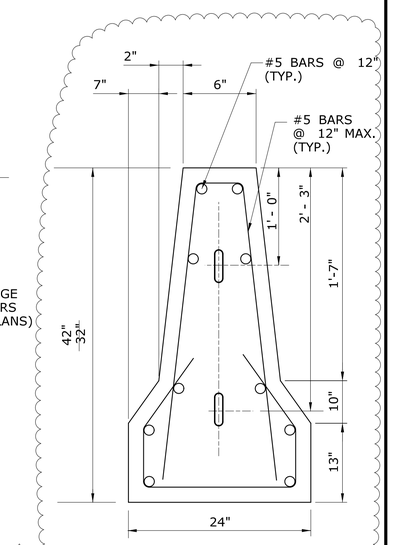

NOTE: DETAILED GEOMETRY FOR THIS BARRIER CAN BE FOUND ON HW-910_15

24"x32" STANDARD REINFORCING DETAIL

PRECAST CONCRETE BARRIER CURB 24"x32"

ADDENDUM NO. 2

REV.	DATE	REVISION DESCRIPTION	SHEET NO.
1	10-22-18	REVISED DIMENSIONS FOR ADDENDUM 2	

THE INFORMATION, INCLUDING ESTIMATED QUANTITIES OF WORK, SHOWN ON THESE SHEETS IS BASED ON LIMITED INVESTIGATIONS BY THE STATE AND IS IN NO WAY WARRANTED TO INDICATE THE CONDITIONS OF ACTUAL QUANTITIES OF WORK WHICH WILL BE REQUIRED.

Plotted Date: 10/22/2018

DESIGNER/DRAFTER: K. PARISEAU
CHECKED BY: K. RADZIWON
NOT TO SCALE

STATE OF CONNECTICUT
DEPARTMENT OF TRANSPORTATION

Filename: ...\HW_D2_170_3250Q_Waterford_I 395 over CT Route 85_BR00255_MDS-01.dgn

SIGNATURE/BLOCK: STATE OF CONNECTICUT, JOHN H. HAMMOND, No. 14313, LICENSED PROFESSIONAL ENGINEER

FUSS & O'NEILL
146 Hartford Road
Manchester, CT 06040
(860)646-2469

PROJECT TITLE:
REHABILITATION OF BRIDGE No. 00255 I-395 OVER ROUTE 85

TOWN: **WATERFORD**

DRAWING TITLE: **MISCELLANEOUS DETAILS**

PROJECT NO. **152-158**
DRAWING NO. **MDS-03**
SHEET NO. **03.12.A2**