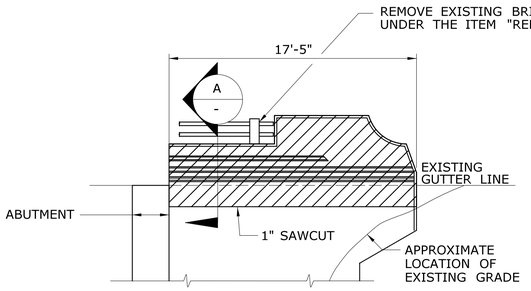

EXISTING - WINGWALL 2B
SCALE: 3/16" = 1'-0"

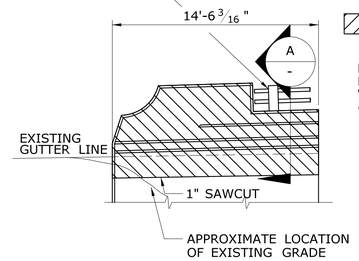

EXISTING - WINGWALL 2A
SCALE: 3/16" = 1'-0"

LEGEND

LIMITS OF CONCRETE REMOVAL

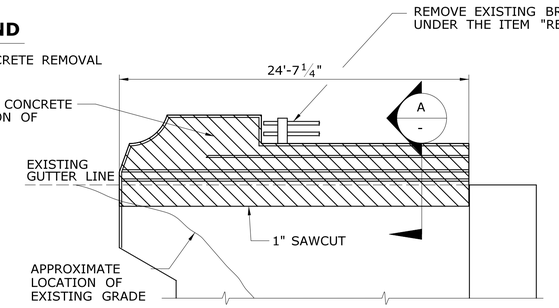

EXISTING - WINGWALL 1B
SCALE: 3/16" = 1'-0"

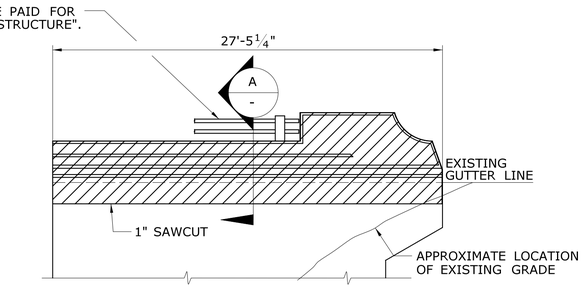

EXISTING - WINGWALL 1A
SCALE: 3/16" = 1'-0"

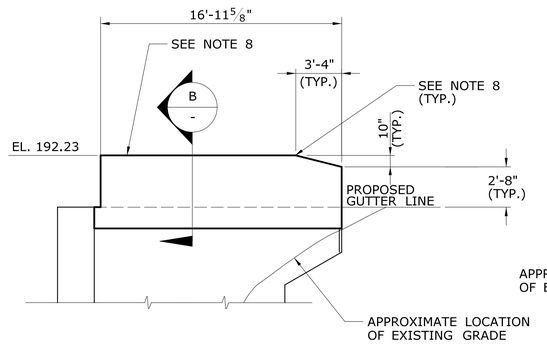

MODIFIED - WINGWALL 2B (TRAILING END)

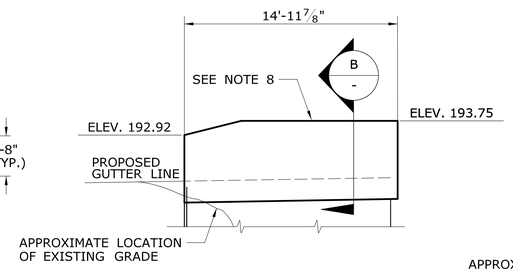

MODIFIED - WINGWALL 2A (LEADING END)

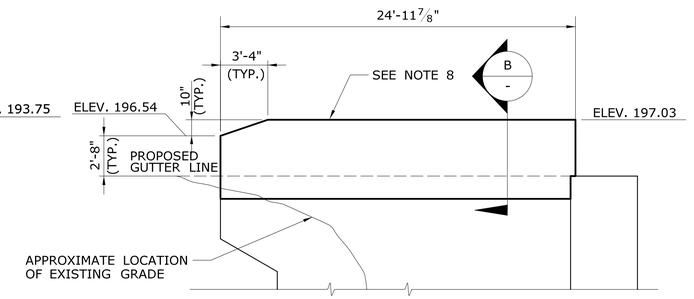

MODIFIED - WINGWALL 1B (LEADING END)

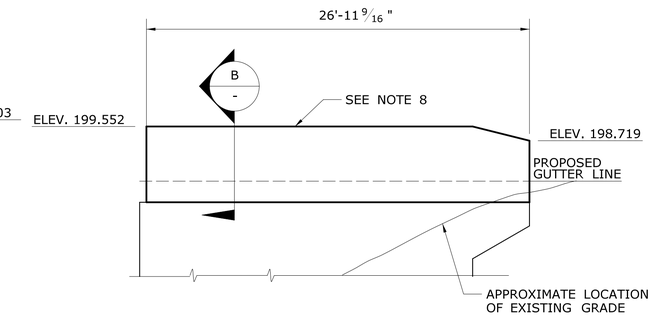

MODIFIED - WINGWALL 1A (TRAILING END)

NOTE: METAL BEAM RAILING ATTACHMENT NOT SHOWN FOR CLARITY, FOR DETAILS SEE DRAWING NO. S-28.

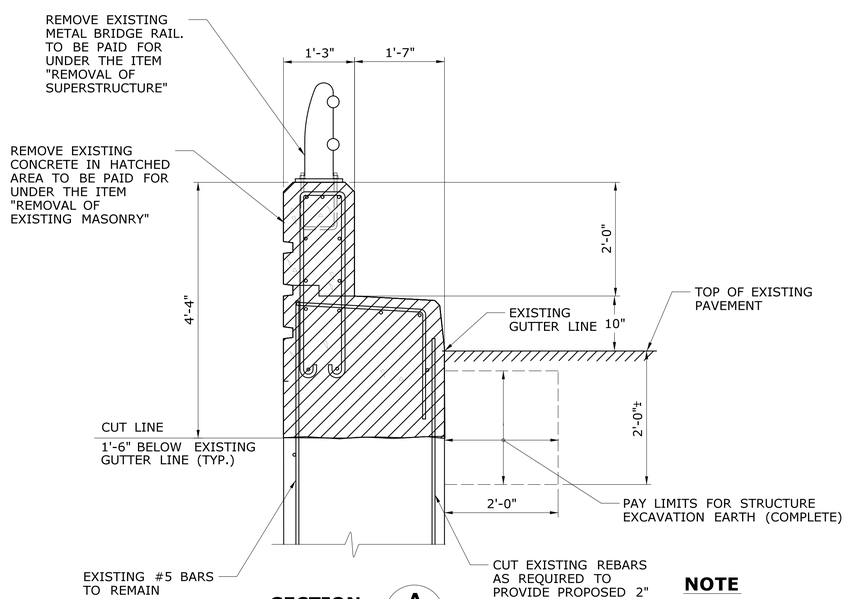

SECTION A
SCALE: 3/4" = 1'-0"

NOTE

EXCAVATE APPROXIMATELY 2'-0"± DOWN FROM TOP OF PAVEMENT TO CREATE ACCESS FOR CUT LINE

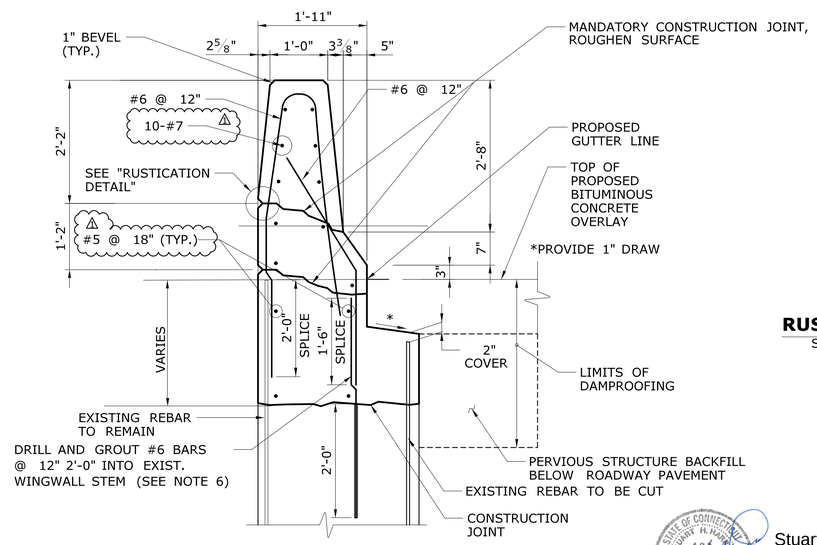

SECTION B
SCALE: 3/4" = 1'-0"

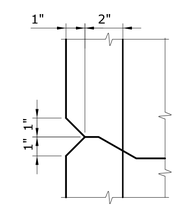

RUSTICATION DETAIL
SCALE: 3" = 1'-0"

NOTES

1. CLASS 'F' CONCRETE TO BE USED IN WINGWALL PARAPETS.
2. ALL REINFORCING IN RECONSTRUCTED WINGWALL PARAPETS AND STEMS SHALL BE EPOXY COATED AND SHALL BE PAID UNDER THE ITEM "DEFORMED STEEL BARS - EPOXY COATED."
3. HOLES DRILLED IN EXISTING CONCRETE FOR GROUTING DOWELS SHALL BE TO THE DEPTH SHOWN IN SECTION B AND THE DIAMETER RECOMMENDED BY THE MANUFACTURER OF THE ADHESIVE BONDING MATERIAL. THIS IS TO BE PAID UNDER THE ITEM "DRILLING HOLES AND GROUTING DOWELS."
4. WINGWALL LENGTHS HAVE BEEN OBTAINED FROM 1955 ORIGINAL DWGS. OF PROJ. 325-06 AND PROJ. 325-01 FOR SOUTHBOUND AND NORTHBOUND STRUCTURE RESPECTIVELY.
5. WW1A AND 2A: SOUTHBOUND STRUCTURE
   WW1B AND 2B: NORTHBOUND STRUCTURE
6. #6 DRILLED BARS SHALL BE PAID UNDER THE ITEM "DRILLING HOLES AND GROUTING DOWELS".
7. MBR ATTACHMENTS AT THE END OF WINGWALL PARAPETS ARE NOT SHOWN FOR CLARITY. (REFER TO HIGHWAY STANDARD SHEETS HW-910-08 AND HW-910-06).
8. TOP OF WINGWALL PARAPETS SHALL FOLLOW PROPOSED GUTTER LINE PROFILE.

Stuart Harris, PE
2018.09.04
13:58:22-04'00'

ADDENDUM NO. 1

REV.	DATE	REVISION DESCRIPTION	SHEET NO.
1	08/16/18	REVISED REINFORCING SIZE BY ADDENDUM NO. 1	

THE INFORMATION, INCLUDING ESTIMATED QUANTITIES OF WORK, SHOWN ON THESE SHEETS IS BASED ON LIMITED INVESTIGATIONS BY THE STATE AND IS IN NO WAY WARRANTED TO INDICATE THE CONDITIONS OF ACTUAL QUANTITIES OF WORK WHICH WILL BE REQUIRED.

Plotted Date: 9/4/2018

DESIGNER/DRAFTER: MS
CHECKED BY: ASG
SCALE AS NOTED

STATE OF CONNECTICUT
DEPARTMENT OF TRANSPORTATION

Filename: ...\S..12.SB.MSH.BR00255.0152.0158.WINGWALL.PARAPET.MODIFICATIONS.dgn

SIGNATURE/BLOCK:

AI Engineers, Inc.
919 MIDDLE STREET
MIDDLETOWN, CT 06457
Phone: (860) 635-7740
Fax: (860) 635-7312

PROJECT TITLE:
REHABILITATION OF BRIDGE NO. 00255
I-395 OVER ROUTE 85

TOWN: **WATEFORD**

DRAWING TITLE: **WINGWALL MODIFICATION DETAILS**

PROJECT NO. **152-158**
DRAWING NO. **S-12**
SHEET NO. **04.12.A1**

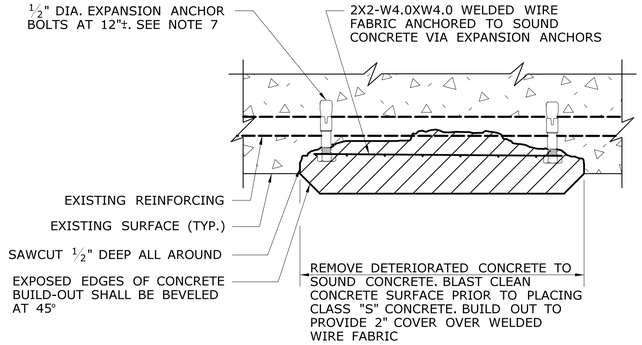

OVERHEAD SURFACE CONCRETE REPAIR WITH LESS THAN ONE HALF OF THE REINFORCING SURFACE EXPOSED

SCALE: 3" = 1'-0"

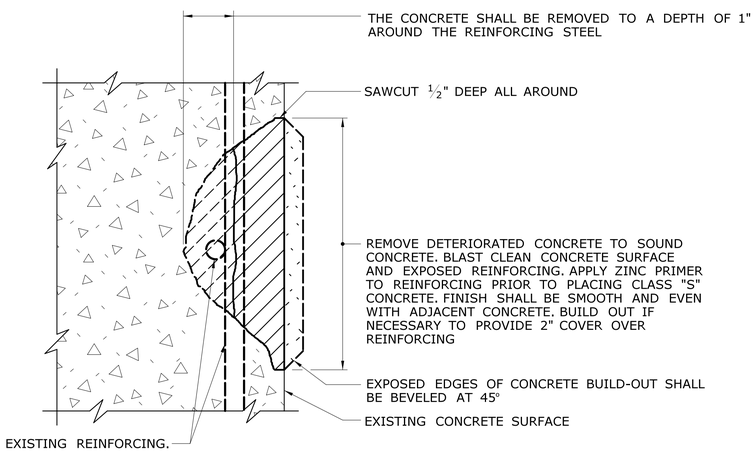

VERTICAL SURFACE CONCRETE REPAIR WITH EXPOSED REINFORCING

SCALE: 3" = 1'-0"

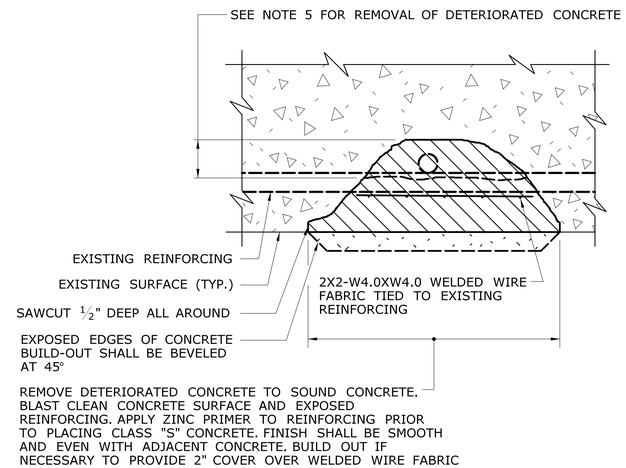

OVERHEAD SURFACE CONCRETE REPAIR WITH MORE THAN ONE HALF OF THE REINFORCING SURFACE EXPOSED

SCALE: 3" = 1'-0"

CONCRETE REPAIR NOTES

1. THE ENGINEER SHALL PERFORM AN INSPECTION OF THE EXISTING PIERS AND ABUTMENTS TO DETERMINE THE LOCATION AND EXACT LIMITS OF ALL AREAS TO BE REPAIRED. THE CONTRACTOR SHALL SUPPLY WHATEVER MEANS NECESSARY, INCLUDING BUT NOT LIMITED TO LADDERS, LIFTS, AND TRAFFIC PROTECTION FOR THE ENGINEER TO SAFELY ACCESS THE AREAS FOR INSPECTION. THE COST OF PROVIDING ACCESS FOR THE INSPECTION SHALL BE CONSIDERED INCLUDED IN THE GENERAL COST OF THE PROJECT. THE ENGINEER SHALL THEN DETERMINE THE TYPE OF REPAIR REQUIRED FOR EACH AREA BASED ON GUIDELINES DESCRIBED IN THE CONCRETE PATCHING NOTES ON THIS DRAWING.
2. SEE DRAWING NOS. S-07 THRU S-10 FOR SUBSTRUCTURE AREAS NOTED AS DEFICIENT IN THE BRIDGE SAFETY INSPECTION REPORTS DATED APRIL 2017. NOTED LOCATIONS ARE APPROXIMATE ONLY. THIS IN NO WAY CONSTITUTES THE FULL LIMITS OF SUBSTRUCTURE REPAIRS BUT IS A GUIDELINE OF DEFICIENT AREAS AS OF THE DATE OF THE NOTED INSPECTION. THE BRIDGE SHALL BE SOUNDED AT THE TIME OF THE PROJECT CONSTRUCTION AND THE REMOVAL LIMITS AND CORRESPONDING QUANTITIES MAY INCREASE FROM THOSE SHOWN WITHIN THE PLANS AS A RESULT OF THAT EVALUATION.
3. AREAS OF MAP CRACKING OR HOLLOW AREAS WITH POTENTIAL TO SPALL DESIGNATED ON SHEETS S-07-S10 AFTER VERIFICATION FROM THE ENGINEER SHALL HAVE THE CONCRETE REMOVED AND REPLACED WITH CLASS "S" CONCRETE AS DETAILED ON THIS SHEET.
4. REINFORCING WHICH IS DETERMINED BY THE ENGINEER TO BE IN NEED OF REPLACEMENT (TYPICALLY, SECTION LOSS OF 50% OR MORE OF GROSS AREA) SHALL BE REMOVED TO A POINT WHERE IT IS SOUND. THE PATCH SHALL EXTEND A SUFFICIENT DISTANCE BEYOND THIS POINT TO DEVELOP A SPLICE LENGTH SPECIFIED IN THE TABLE ON THIS SHEET. ~~REINFORCING BARS SHALL BE PAID FOR UNDER THE ITEM "DEFORMED STEEL BARS".~~ 1
5. ON PIER COLUMNS AND CAPS, IF REMOVAL OF DETERIORATED CONCRETE EXTENDS INSIDE THE MAIN REINFORCEMENT, REMOVAL SHALL BE LIMITED TO ONE FACE OF THE MEMBER AT A TIME AND A MAXIMUM OF 3 FT HORIZONTAL AND 3 FT VERTICAL. IF REMOVAL EXTENDS MORE THAN 1.5" INSIDE THE MAIN REINFORCEMENT, THE WORK SHALL BE STOPPED AND THE ENGINEER NOTIFIED IMMEDIATELY.
6. IF REINFORCEMENT LAP SPLICES ARE ENCOUNTERED IN PIER CAPS OR COLUMNS, THE ENGINEER SHALL BE INFORMED IMMEDIATELY.
7. EXPANSION ANCHOR BOLTS SHALL BE MECHANICALLY GALVANIZED IN ACCORDANCE WITH ASTM B695, CLASS 50, TYPE 1. COST OF WELDED WIRE FABRIC AND BOLTS, INCLUDING MATERIAL AND INSTALLATION, SHALL BE INCLUDED WITH THE COST OF PATCHING MATERIAL.
8. AT THE OPTION OF THE ENGINEER, THE PATCHING MATERIALS MAY BE SPECIFIED TO REPAIR DETERIORATED AREAS NOT MEETING THE ABOVE REQUIREMENTS.
9. ALL CONCRETE PATCH PERIMETERS SHALL BE SQUARED-OFF AND SHALL NOT BE DIAGONAL, CIRCULAR, OR IRREGULARLY SHAPED.
10. SHALLOW VERTICAL SPALLS WITHOUT EXPOSED REINFORCING SHALL NOT BE PATCHED UNLESS CONCRETE IS REMOVED TO A DEPTH OF 1" BEHIND THE STEEL AND THE AREA REPAIRED WITH "CLASS 'S' CONCRETE".
11. FOR ANY VERTICAL AREAS WHERE THE REINFORCING IS EXPOSED, CONCRETE SHALL BE FURTHER REMOVED TO A DEPTH OF 1" BEHIND THE STEEL AND THE AREA SHALL BE REPAIRED WITH "CLASS 'S' CONCRETE".

TABLE OF MIN. SPLICE LENGTHS

BAR SIZE	MIN. SPLICE LENGTH
#5	1'-8"
#6	2'-1"
#7	2'-10"
#8	3'-9"
#9	4'-9"
#10	6'-0"
#11	7'-4"

ADDENDUM NO. 1

REV.	DATE	REVISION DESCRIPTION	SHEET NO.
1	8/29/18	REMOVED STEEL REINFORCING NOTE	

THE INFORMATION, INCLUDING ESTIMATED QUANTITIES OF WORK, SHOWN ON THESE SHEETS IS BASED ON LIMITED INVESTIGATIONS BY THE STATE AND IS IN NO WAY WARRANTED TO INDICATE THE CONDITIONS OF ACTUAL QUANTITIES OF WORK WHICH WILL BE REQUIRED.

Plotted Date: 8/30/2018

DESIGNER/DRAFTER: DLW
CHECKED BY: SHH
SCALE AS NOTED

STATE OF CONNECTICUT
DEPARTMENT OF TRANSPORTATION

Filename: ...\S_11_SB_MSH_BR00255_0152_0158_SUBSTRUCTURE_REPAIR_DETAILS.dgn

SIGNATURE/BLOCK: STATE OF CONNECTICUT, STUART H. HARRIS, LICENSED PROFESSIONAL ENGINEER, No. 14514

FUSS & O'NEILL
146 Hartford Road
Manchester, CT 06040
(860)646-2469

PROJECT TITLE:
REHABILITATION OF BRIDGE NO. 00255 I-395 OVER ROUTE 85

TOWN: **WATERFORD**

DRAWING TITLE: **SUBSTRUCTURE REPAIR DETAILS**

PROJECT NO. 152-158
DRAWING NO. S-13
SHEET NO. 04.13.A1

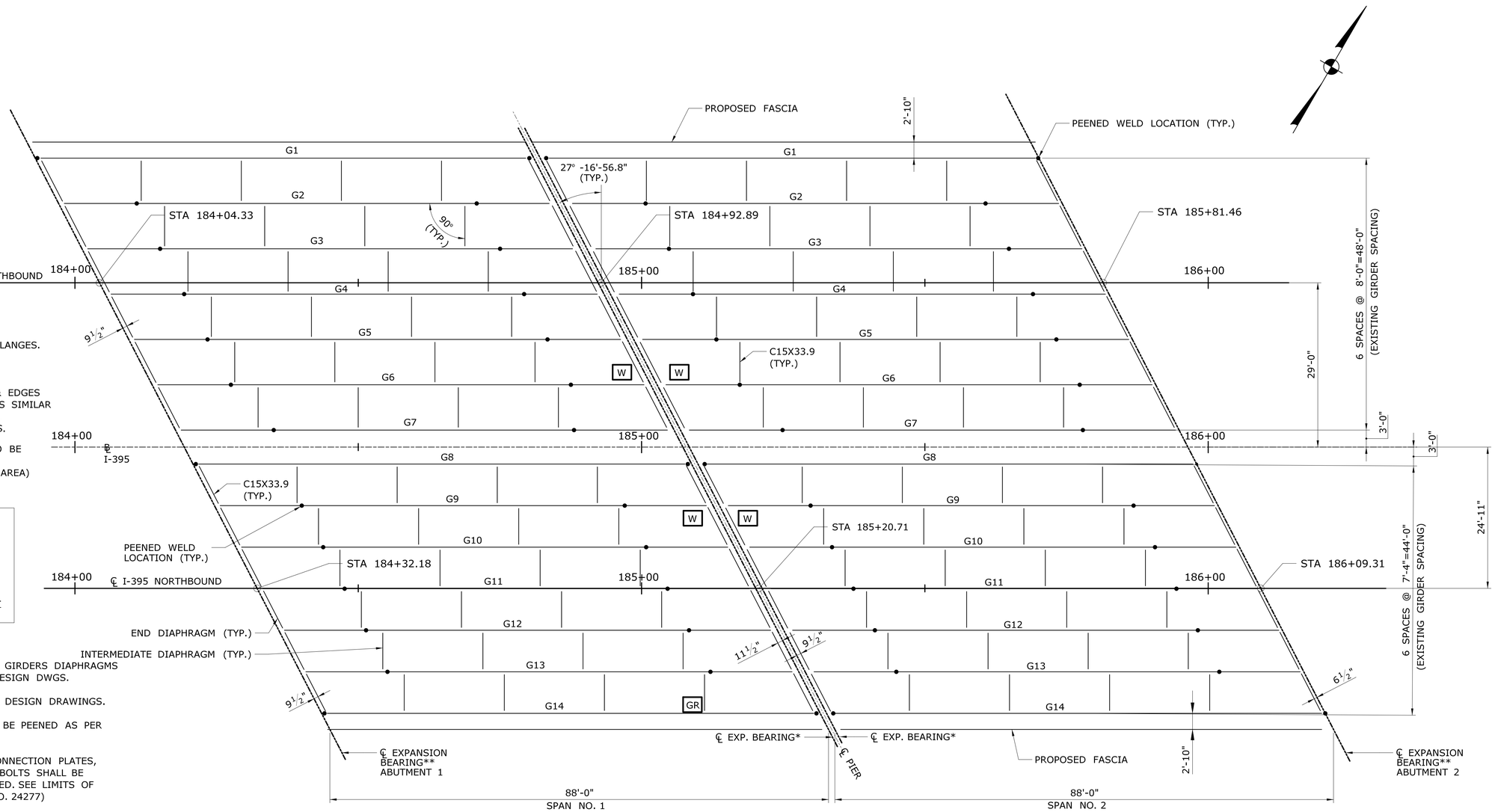

LIMITS OF ABRASIVE BLAST CLEAN & FIELD PAINTING OF STRUCTURE

A: TOP FLANGES:
BOTTOM OF TOP FLANGES & SIDES OF TOP FLANGES.
B. BOTTOM FLANGES:
TOP, BOTTOM & SIDES OF BOTTOM FLANGES.
C. WEBS: BOTH FACES OF GIRDER WEBS.
D. CONNECTION PLATES/ STIFFNERS ALL FACES & EDGES
E. INTERMEDIATE DIAPHRAGMS (END DIAPHRAGMS SIMILAR EXCEPT FOR TOP FLANGE) ALL FACES EDGES.
F. BEARING SOLE PLATES, ~~LOAD PLATES~~ & BOLTS.

APPROXIMATE STRUCTURAL STEEL AREA TO BE PAINTED = 30,800 SF*
(*CONTRACTOR SHALL VERIFY AREA)

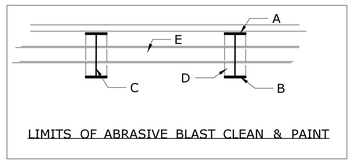

LIMITS OF ABRASIVE BLAST CLEAN & PAINT

NOTES

1. FOR DIMENSIONS, DETAILS OF EXISTING STEEL GIRDERS DIAPHRAGMS AND PARTS ARE NOT SHOWN SEE ORIGINAL DESIGN DWGS.
2. GIRDER SCHEDULE SHOWN IS FROM ORIGINAL DESIGN DRAWINGS.
3. ALL COVER PLATE WELDS AT THE ENDS SHALL BE PEENED AS PER DETAILS ON DRAWING NO. S-16.
4. ALL EXISTING STEEL GIRDERS, DIAPHRAGMS, CONNECTION PLATES, NEW SOLE PLATES, STEEL ATTACHMENTS AND BOLTS SHALL BE ABRASIVELY BLAST CLEANED AND FULLY PAINTED. SEE LIMITS OF PAINTING. (FEDERAL COLOR STD. 595 COLOR NO. 24277)
5. CONTRACTOR SHALL GRIND ALL GOUGES FOUND ON THE EXISTING STEEL FLANGES AND COVER PLATES FROM PREVIOUS IMPACT OR COLLISION DAMAGE, BEFORE PAINTING THE SUPERSTRUCTURE. THIS WORK SHALL BE PAID UNDER "STRUCTURAL STEEL"
6. EXISTING PAINT REMOVED FROM THE EXISTING GIRDERS NEAR THE SOLE PLATES SHALL BE PAID UNDER ITEM LOCALIZED PAINT REMOVAL & WILL NOT BE COVERED UNDER ABRASIVE BLAST CLEAN & FIELD PAINTING.
7. GRINDING CAN BE USED TO TOTALLY REMOVE PORTIONS OF A DETAIL CONTAINING SMALL CRACKS, PARTICULARLY CRACKS AT THE EDGES OF FLANGES OR OTHER PLATES. THE GOUGE CREATED BY GRINDING SHOULD BE TAPERED WITH A 2.5:1 SLOPE AND FINISH GRINDING SHOULD BE PERFORMED PARALLEL TO THE APPLIED CYCLIC STRESSES (THAT IS, SPARKS FROM THE GRINDING OPERATION SHOULD FLY IN THE DIRECTION OF THE PRIMARY STRESS, THUS CAUSING GRINDING SCRATCHES TO BE PARALLEL TO THE PRIMARY STRESS).

GIRDER	SIZE AND PLATE
G1	36 WF 300 WITH COVER ℙ 15" X 1 7/8" X 86'-10"
G2 - G6	36 WF 245 WITH COVER ℙ 15" X 1 1/2" X 60"-0"
G7	36 WF 300 WITH COVER ℙ 15" X 1 1/4" X 53'- 0"
G8 & G14	36 WF 300 WITH COVER ℙ 15" X 1 3/4" X 86'-11"
G9 - G13	36 WF 245 WITH COVER ℙ 15" X 1 1/4" X 57"- 0"

FRAMING PLAN (EXISTING)

SCALE: 1" = 10'

*REPLACE EXISTING FIX. BEARINGS WITH NEW EXPANSION BEARING

**REPLACE EXISTING EXPANSION BEARING WITH NEW EXPANSION BEARINGS

KEY

W - DENOTES LOCATION OF GIRDER WEB REPAIR. FOR DETAIL SEE DRAWING NO. S-16.

GR - DENOTES LOCATION OF FLANGE GOUGE REPAIR. FOR DETAIL SEE DRAWING NO. S-16.

• - DENOTES LOCATION OF PEENED WELD AND COVER PLATES ENDS. FOR DETAIL SEE DRAWING NO. S-16.

ADDENDUM NO. 1

REV.	DATE	REVISION DESCRIPTION	SHEET NO.
1	08/16/18	REVISED BY ADDENDUM NO. 1	

THE INFORMATION, INCLUDING ESTIMATED QUANTITIES OF WORK, SHOWN ON THESE SHEETS IS BASED ON LIMITED INVESTIGATIONS BY THE STATE AND IS IN NO WAY WARRANTED TO INDICATE THE CONDITIONS OF ACTUAL QUANTITIES OF WORK WHICH WILL BE REQUIRED.

Plotted Date: 8/30/2018

DESIGNER/DRAFTER: MJ
CHECKED BY: ASG
SCALE AS NOTED

STATE OF CONNECTICUT
DEPARTMENT OF TRANSPORTATION

Filename: ...\S_14_SB_MSH_BR00255_0152_0158_FRAMING_PLAN.dgn

SIGNATURE/ BLOCK:

STATE OF CONNECTICUT · DOUGLAS HAIR PLAN · No. 18180 · LICENSED PROFESSIONAL ENGINEER

AI Engineers, Inc.
919 MIDDLE STREET
MIDDLETOWN, CT 06457
Phone: (860) 635-7740
Fax: (860) 635-7312

PROJECT TITLE:
REHABILITATION OF BRIDGE NO. 00255
I-395 OVER ROUTE 85

TOWN: **WATERFORD**

DRAWING TITLE: **FRAMING PLAN**

PROJECT NO. **152-158**
DRAWING NO. **S-14**
SHEET NO. **04.14.A1**

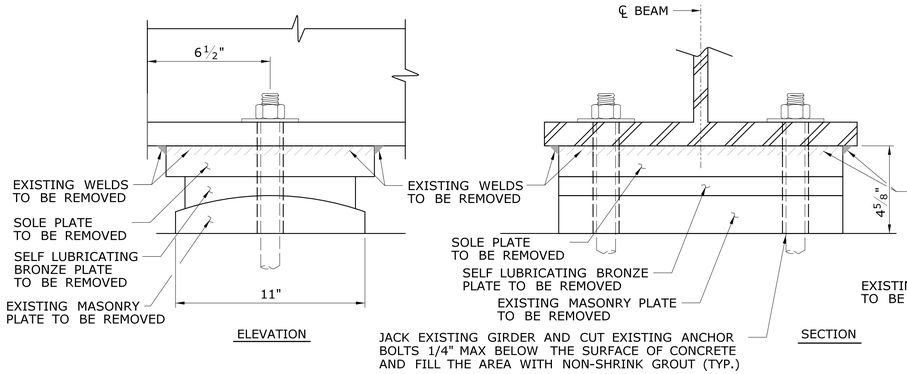

EXISTING EXPANSION BEARING DETAILS AT ABUTMENTS

SCALE: 3" = 1'-0"

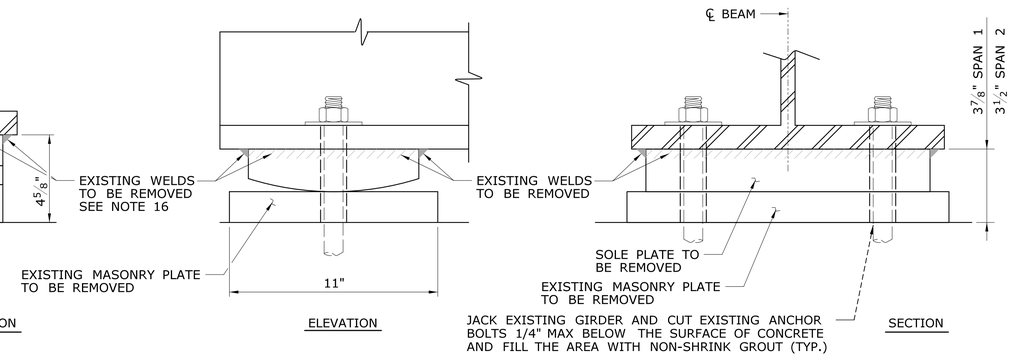

EXISTING FIXED BEARING DETAILS AT PIERS

SCALE: 3" = 1'-0"

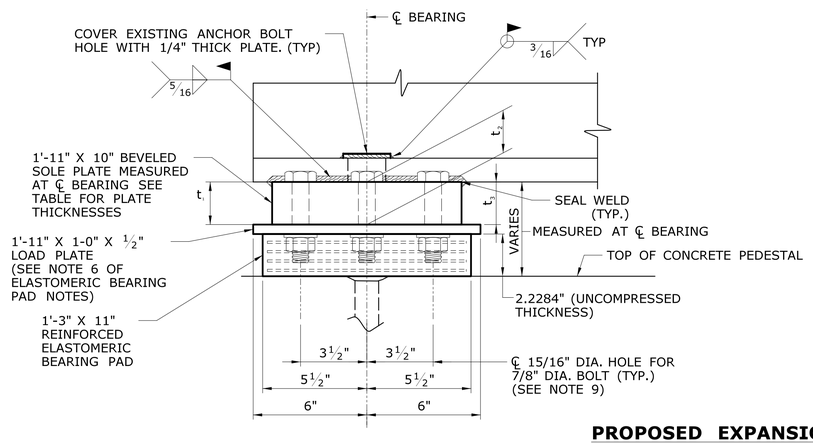

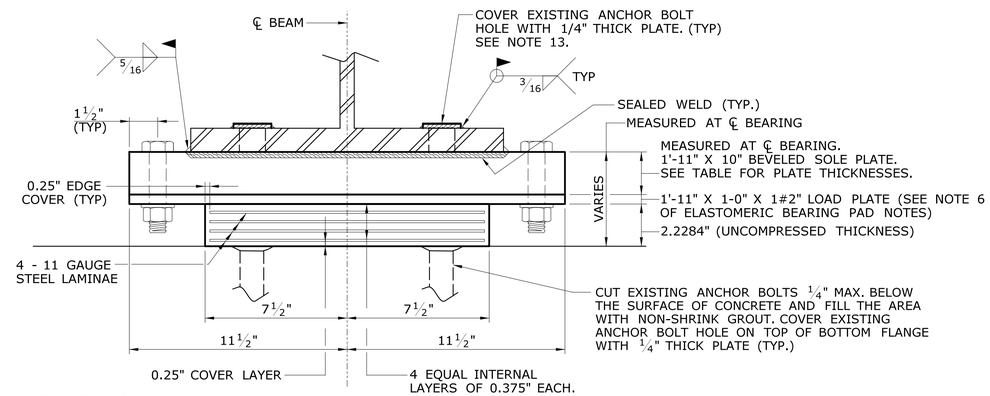

PROPOSED EXPANSION BEARING DETAILS AT ABUTMENTS & PIERS

SCALE: 3" = 1'-0"

GIRDER	Girder End Reactions (Unfactored) Kips FOR JACKING ALL GIRDERS SIMULTANEOUSLY							
	ABUT. 1		PIER (WEST SIDE)		PIER (EAST SIDE)		ABUT. 2	
	DL	LL+I	DL	LL+I	DL	LL+I	DL	LL+I
G1	77.63	74.91	74.88	82.43	74.65	74.91	74.65	82.43
G2	78.77	92.65	76.43	102.78	76.38	92.65	76.31	102.78
G3	78.38	92.65	77.1	102.61	77.14	92.65	77.07	102.61
G4	77.16	92.65	77.07	102.61	77.14	92.65	77.08	102.61
G5	76.38	102.78	76.31	92.65	76.41	102.78	77.54	92.65
G6	75.63	102.97	75.55	92.65	75.74	102.97	77.93	92.65
G7	71.34	84.52	71.27	76.56	71.57	84.52	74.29	76.56
G8	75.75	73.92	72.67	81.34	72.35	73.92	72.35	81.34
G9	74.53	87.28	71.78	96.83	71.65	87.28	71.59	96.83
G10	74.35	87.28	72.43	96.66	72.4	87.28	72.34	96.66
G11	73.65	96.5	73.11	87.28	73.23	96.5	74.31	87.28
G12	72.4	96.66	72.34	87.28	72.67	96.66	75.67	87.28
G13	71.65	96.83	71.59	87.28	72.09	96.83	75.78	87.28
G14	71.8	79.35	71.74	72.12	72.42	79.35	76.41	72.12

FUTURE JACKING NOTES

1. REACTIONS SHOWN IN THE TABLE ON THIS SHEET INCLUDE THE DEAD LOAD OF THE NEW 8.5-INCH THICK DECK AND THE NEW 3- INCH OVERLAY AND ARE INTENDED FOR FUTURE JACKING.
2. CONTRACTOR MAY USE THESE REACTIONS TO JACK THE GIRDERS WITH THE EXISTING DECK.
3. CONTRACTOR MAY ELECT TO JACK THE EXISTING STRUCTURE FROM THE BRIDGE SEATS AND THE PIER OR USE TEMPORARY SHORING TOWERS IN FRONT OF THE ABUTMENTS AND THE PIER FOR JACKING.
4. CONTRACTOR SHALL DETERMINE THE NEED AND LOCATION OF THE JACKING STIFFENERS DEPENDING ON THE LOCATION OF THE JACKS PLACED AND THE JACKING SCHEME USED.
5. THE CONTRACTOR SHALL VERIFY THE STRUCTURAL ADEQUACY OF THE EXISTING DIAPHRAGMS AND THEIR CONNECTIONS TO TRANSFER THE JACKING LOADS ON TO THE GIRDERS.
6. THE ENTIRE JACKING SCHEME SHALL BE DESIGNED AND ENGINEERED BY THE CONTRACTOR.
7. THE JACKING STIFFENERS IF REQUIRED AND INSTALLED SHALL BE LEFT IN PLACE FOR FUTURE JACKING NEEDS AND SHALL BE PAINTED ALONG WITH THE ALL OTHER PAINTING ON THIS STRUCTURE.
8. A PROFESSIONAL ENGINEER LICENSED IN THE STATE OF CONNECTICUT SHALL PREPARE DESIGN CALCULATIONS AND WORKING DRAWINGS SHOWING JACKING SCHEME, JACKING LOCATIONS, BEARING STIFFENERS ETC. NECESSARY FOR THE EXISTING BEARING REPLACEMENT.
9. BEARING REPLACEMENT WORK SHALL NOT BEGIN UNTIL THE WORKING DRAWINGS AND ASSOCIATED CALCULATIONS ARE SUBMITTED BY THE CONTRACTOR AND ARE REVIEWED AND ACCEPTED BY THE ENGINEER.

ELASTOMERIC BEARING PAD NOTES

1. THE ELASTOMERIC BEARINGS ARE DESIGNED USING METHOD B OF THE AASHTO DIVISION II SECTION 18.
2. THE CONTRACTOR SHALL RECORD THE GRADE OF THE EXISTING BEAMS OR SOLE PLATES TO ACCURATELY PRODUCE NEW BEVELED SOLE PLATES. THE BOTTOM SURFACE OF THE NEW SOLE PLATE SHALL BE LEVEL AFTER INSTALLATION.
3. THE ELASTOMER SHALL BE VIRGIN POLYCHLOROPENE. THE ELASTOMER COMPOUND SHALL BE LOW TEMPERATURE GRADE 3 AND HAVE A SHORE "A" DUROMETER HARDNESS OF 50 +/-5 POINTS AND MEET THE REQUIREMENTS OF AASHTO, DIVISION II - CONSTRUCTION (SECTION 18).
4. THE INTERNAL STEEL LAMINAE SHALL CONFORM TO ASTM A1011, GRADE 36.
5. THE STEEL FOR THE LOAD PLATES, BEVELED SOLE PLATES AND COVER PLATES FOR EXISTING ANCHOR BOLT HOLES SHALL CONFORM TO THE REQUIREMENTS OF AASHTO M270, GRADE 36. THE FURNISHING AND INSTALLING OF THESE PLATES SHALL BE INCLUDED FOR PAYMENT UNDER THE ITEM "BEARING REPLACEMENT WITH ELASTOMERIC BEARING PADS".
6. THE LOAD PLATE SHALL BE HOT BONDED TO THE ELASTOMERIC BEARING DURING VULCANIZATION AND SHALL RECEIVE A SHOP PRIMER COAT AS SHOWN ON THE PLANS.
7. WELDING DETAILS, PROCEDURES AND TESTING METHODS SHALL CONFORM TO THE ANSI/AASHTO/AWS D1.5:2015 - BRIDGE WELDING CODE, UNLESS OTHERWISE NOTED ON THE PLANS.
8. THE EXPOSED SURFACES OF THE ELASTOMER SHALL NOT BE PAINTED.
9. ALL HIGH STRENGTH BOLTS SHALL CONFORM TO ASTM F3125 GRADE, TYPE 1. ALL HEX NUTS SHALL CONFORM TO ASTM A563 HEAVY HEX TYPE C. ALL CIRCULAR HARDENED WASHERS SHALL CONFORM TO ASTM F436 TYPE 1.
10. THE ELASTOMERIC BEARING SHALL BE INSTALLED WHEN THE AMBIENT TEMPERATURE IS BETWEEN 40° F AND 80° F AND HAS BEEN WITHIN THIS RANGE FOR AT LEAST TWO HOURS.
11. THE COST OF REMOVING THE EXISTING BEARINGS, FURNISHING AND INSTALLING THE ELASTOMERIC BEARINGS, INCLUDING THE BEVELED SOLE PLATES AND LOAD PLATES, SHALL BE PAID FOR UNDER THE ITEM "BEARING REPLACEMENT WITH ELASTOMERIC BEARING PADS."
12. JACKING OF BEAMS FOR REPLACING BEARINGS SHALL BE PAID FOR UNDER THE ITEM "JACKING EXISTING SUPERSTRUCTURE."
13. THE FURNISHING AND WELDING OF STEEL PLATES OVER SLOTTED HOLES IN EXISTING STEEL WHERE ANCHOR BOLTS HAVE BEEN REMOVED FOR BEARING REPLACEMENT SHALL BE PAID FOR UNDER THE ITEM "BEARING REPLACEMENT WITH ELASTOMERIC BEARING PADS."
14. OVERHEAD UTILITY WIRES LOCATED IN SPAN 1 NEAR ABUTMENT 1 WILL BE REMOVED BY OTHERS PRIOR TO JACKING OPERATION.
15. EXISTING WELDS SHALL BE REMOVED BY CUTTING & GRINDING, NO FLAME (CUTTING OR BURNING SHALL BE USED OR BURNING).
16. ~~BEARING LOAD PLATES SHALL BE VULCANIZED TO THE ELASTOMERIC BEARINGS AND SHALL BE SHOP PAINTED.~~ △1

BEVELED SOLE PLATE THICKNESS TABLE (t_2)				
LOCATION	ABUTMENT 1	PIER SPAN 1	PIER SPAN 2	ABUTMENT 2
SOLE PLATE THICKNESS (IN.) AT ℄ BEARING	1 5/8"	2 1/4"	1 7/8"	1 5/8"

CONTRACTOR SHALL DETERMINE SOLE PLATE THICKNESS t_1 & t_2 BASED ON FIELD MEASUREMENTS & PROPOSED THICKNESS OF THE BEARINGS.

BEARING DESIGN LOAD TABLE	
SERVICE DEAD LOAD (KIPS)	67.05
SERVICE LIVE LOAD (KIPS)	147.40

(LOADS PROVIDED ARE WITHOUT IMPACT ALLOWANCE)

ADDENDUM NO. 1

REV.	DATE	REVISION DESCRIPTION	SHEET NO.
△1	08/16/18	NOTE REMOVED BY ADDENDUM NO. 1	

THE INFORMATION, INCLUDING ESTIMATED QUANTITIES OF WORK, SHOWN ON THESE SHEETS IS BASED ON LIMITED INVESTIGATIONS BY THE STATE AND IS IN NO WAY WARRANTED TO INDICATE THE CONDITIONS OF ACTUAL QUANTITIES OF WORK WHICH WILL BE REQUIRED.

Plotted Date: 8/30/2018

DESIGNER/DRAFTER: JM
CHECKED BY: ASG
SCALE AS NOTED

STATE OF CONNECTICUT
DEPARTMENT OF TRANSPORTATION

Filename: ...\S_15_SB_MSH_BR00255_0152_0158_BEARING_DETAILS.dgn

SIGNATURE/BLOCK:

AI Engineers, Inc.
919 MIDDLE STREET
MIDDLETOWN, CT 06457
Phone: (860) 635-7740
Fax: (860) 635-7312

PROJECT TITLE: REHABILITATION OF BRIDGE NO. 00255 I-395 OVER ROUTE 85

TOWN: WATERFORD

DRAWING TITLE: BEARING DETAILS

PROJECT NO. 152-158
DRAWING NO. S-15
SHEET NO. 04.15.A1

REHABILITATION OF EXISTING STRUCTURAL STEEL NOTES

1. ALL STRUCTURAL STEEL REPAIR PLATES AND FASTENERS SHALL CONFORM TO FORM 817 ARTICLE M.06.
2. ALL STRUCTURAL STEEL REPAIR PLATES SHALL BE SMOOTH, FREE OF BURRS, NICKS, GOUGES, OIL, OR OTHER COATINGS.
3. WELDING DETAILS, PROCEDURES AND TESTING METHODS SHALL CONFORM TO THE ANSI/AASHTO/AWS D1.5:2015 BRIDGE WELDING CODE, UNLESS OTHERWISE NOTED ON THE PLAN.
4. ALL REPAIR PLATE TO FLANGE, WEB AND OR CONNECTION/STIFFENER PLATE FILLET WELDS SHALL BE INSPECTED BY MAGNETIC PARTICLE METHOD. ALL COMPLETE JOINT PENETRATION GROOVE WELDS SHALL BE INSPECTED BY ULTRASONIC TESTING.
5. MULTIPLE PASS WELDS, INSPECTED BY THE MAGNETIC PARTICLE METHOD SHALL HAVE EACH PASS OR LAYER INSPECTED BEFORE PROCEEDING TO THE NEXT PASS OR LAYER, AS DETERMINED BY THE ENGINEER.
6. FURNISHING AND INSTALLING NEW STRUCTURAL STEEL REPAIR PLATES INCLUDING FASTENERS, EPOXY FILLER MATERIAL, ARC GOUGING, FLAME CUTTING, GRINDING AND WELDING SHALL BE PAID FOR UNDER THE ITEM "STRUCTURAL STEEL REPAIRS". △1

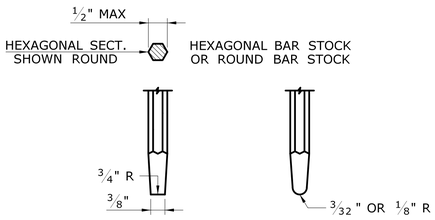

PEENING TOOL DETAIL

SCALE: 6" = 1'-0"

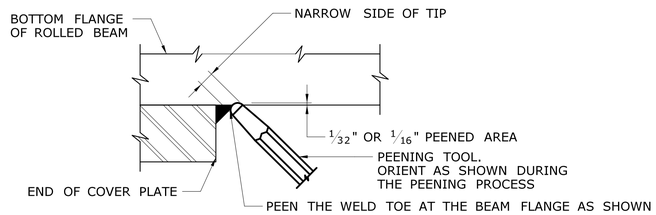

SECTION AT A PEENED WELD TOE

SCALE: 6" = 1'-0"

PEENING NOTES

1. WHEN PEENING TOOL IS SHAPED, ANY SHARP EDGES WHICH RESULT FROM SHAPING OF THE TOOL SHOULD BE GROUND SMOOTH. FOR PEENING INFORMATION NOT SHOWN, SEE SPECIAL PROVISION "PEENING COVER PLATE WELDS."
2. A SMALL PNEUMATIC HAMMER CAPABLE OF SUPPLYING A PRESSURE OF 25 PSI SHALL BE USED.
3. PEENING SHALL BE PERFORMED UNTIL THE WELD TOE IS SMOOTH. DEPTH OF INDENTATION DUE TO PEENING SHALL BE APPROXIMATELY 1/32" TO 1/16".
4. PAINTING OF PEENED WELDS WILL BE PAID SEPARATELY UNDER THE ITEM FOR "ABRASIVE BLAST CLEANING AND FIELD PAINTING OF STRUCTURE".

GENERAL STEEL REPAIR NOTES

1. FOR PROPOSED LOCATIONS OF PLATING OVER DETERIORATED STEEL, SEE FRAMING PLAN. AREAS OF SECTION LOSS ARE BASED ON INFORMATION PROVIDED IN THE 2017 CT DOT BRIDGE INSPECTION REPORT AND BRIDGE INSPECTION REPORT BY AI ENGINEERS, INC. IN APRIL 2017.
2. IN THE EVENT THAT ADDITIONAL DETERIORATION AND SECTION LOSS IS FOUND AT LOCATIONS OTHER THAN INDICATED IN THE PLANS, THE CONTRACTOR SHALL NOTIFY ENGINEER & SEEK FURTHER DIRECTION.
3. ALL STRUCTURAL STEEL REPAIRS SHALL BE PERFORMED AFTER THE EXISTING STRUCTURAL STEEL IS ABRASIVE BLAST CLEANED.
4. ALL STRUCTURAL STEEL REPAIRS SHALL BE PERFORMED BEFORE JACKING AND BEARING REPLACEMENT.

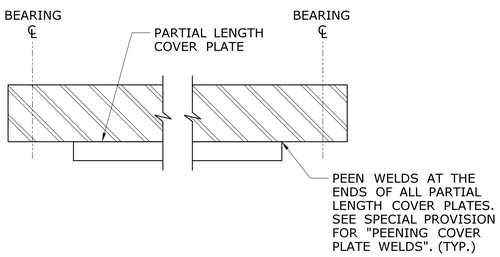

ELEVATION TYPICAL BEAM

SCALE: N.T.S.

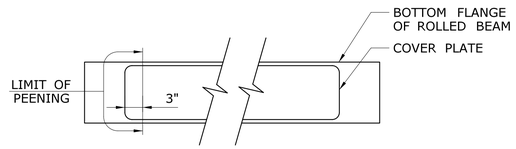

PEENING LIMITS

SCALE: N.T.S.

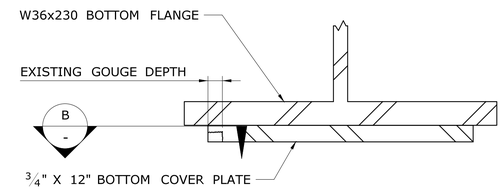

CROSS SECTION OF GIRDER 14 SPAN 1

NOT TO SCALE

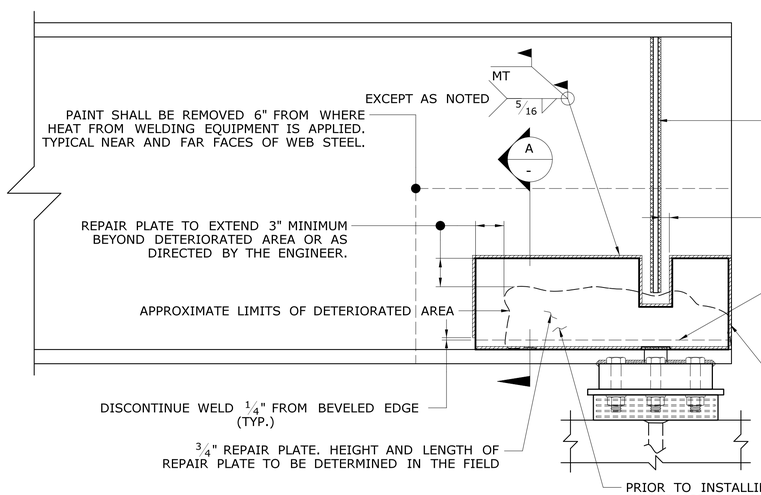

BEAM END ELEVATION

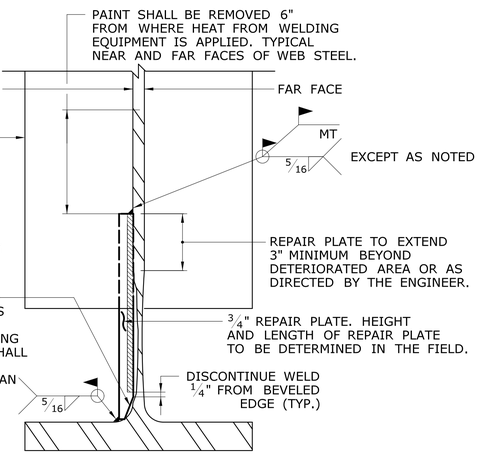

SECTION A -

PARTIAL HEIGHT WEB REPAIR DETAILS

SCALE: N.T.S.

REPAIR LOCATION W

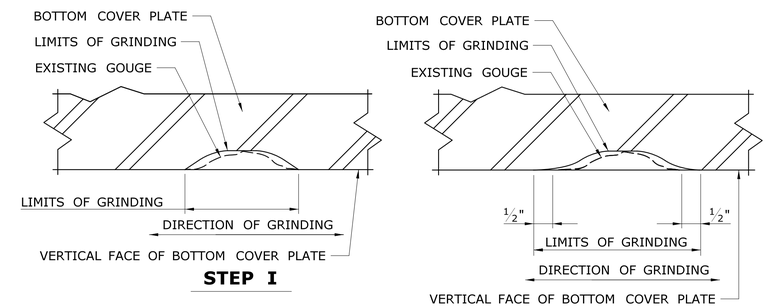

REPAIR TO VERTICAL EDGE OF BOTTOM FLANGE SHOWN
TREATMENT TO BOTTOM SURFACE OF FLANGE SIMILAR

BOTTOM COVER PLATE GOUGE REPAIR DETAIL STEPS - SECTION B -

SCALE: 6" = 1'-0"

GOUGE REPAIR SEQUENCE

1. GRIND AREA OF GOUGE AS SHOWN IN "STEP 1" DETAIL TO REMOVE GOUGE.
2. INSPECT THE AREA OF GOUGE REMOVAL BY DYE PENETRANT TECHNIQUES TO ENSURE DEFECTS HAVE BEEN REMOVED, MAGNETIC PARTICAL INSPECTION TECHNIQUES MAY ALSO BE APPLIED. IF CRACKS ARE IDENTIFIED, CONTINUE GRINDING AND INSPECTION UNTIL THE CRACK IS COMPLETELY REMOVED.
3. FINISH GRINDING AS SHOWN IN "STEP 2" DETAIL TO BLEND THE EDGES OF THE GRINDED AREA INTO THE SURFACE OF THE SURROUNDING MATERIAL.

NOTE: GRINDING OF GOUGE IN THE BOTTOM COVER PLATE TO BE PAID FOR UNDER THE ITEM "STRUCTURAL STEEL". THE PAINT REMOVAL AND REPAINTING OF EXISTING STEEL TO BE PAID FOR UNDER THE ITEM "LOCALIZED PAINT REMOVAL OF EXISTING STEEL".

ADDENDUM NO. 1

REV.	DATE	REVISION DESCRIPTION	SHEET NO.
△1	08/16/18	REVISED NOTE BY ADDENDUM NO. 1	

THE INFORMATION, INCLUDING ESTIMATED QUANTITIES OF WORK, SHOWN ON THESE SHEETS IS BASED ON LIMITED INVESTIGATIONS BY THE STATE AND IS IN NO WAY WARRANTED TO INDICATE THE CONDITIONS OF ACTUAL QUANTITIES OF WORK WHICH WILL BE REQUIRED.

Plotted Date: 8/30/2018

DESIGNER/DRAFTER: HA
CHECKED BY: ASG
SCALE AS NOTED

STATE OF CONNECTICUT
DEPARTMENT OF TRANSPORTATION

Filename: ...\S_16_SB_MSH_BR00255_0152_0158_PEENING_DETAILS.dgn

SIGNATURE/BLOCK: STATE OF CONNECTICUT MIDDLETOWN, CT. No. 18180 LICENSED PROFESSIONAL ENGINEER

AI Engineers, Inc.
919 MIDDLE STREET
MIDDLETOWN, CT 06457
Phone: (860) 635-7740
Fax: (860) 635-7312

PROJECT TITLE: REHABILITATION OF BRIDGE NO. 00255 I-395 OVER ROUTE 85

TOWN: WATERFORD

DRAWING TITLE: PEENING DETAILS & STEEL REPAIR DETAILS

PROJECT NO. 152-158
DRAWING NO. S-16
SHEET NO. 04.16.A1

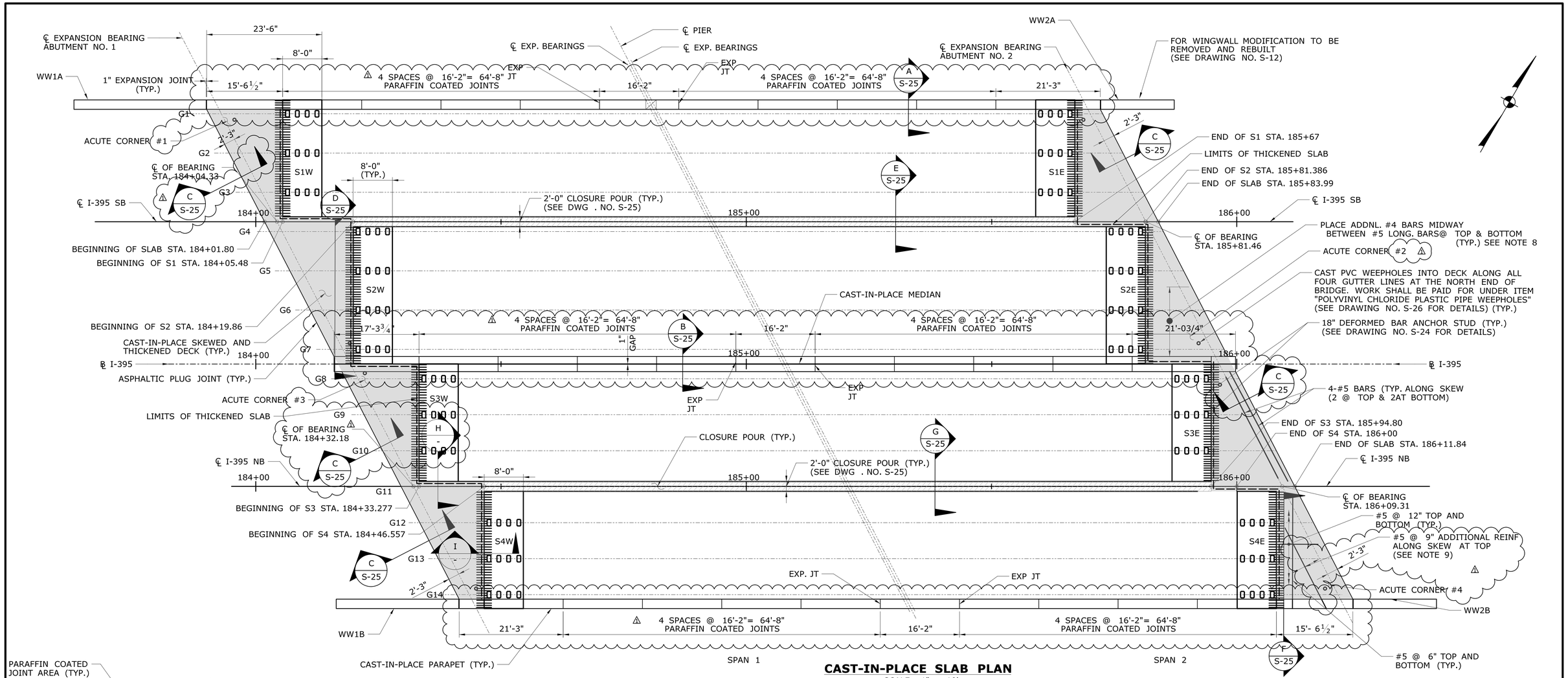

CAST-IN-PLACE SLAB PLAN

SCALE: 1" = 10'

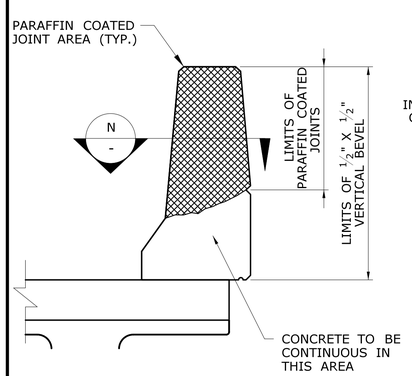

POSITIVE MOMENT REGION

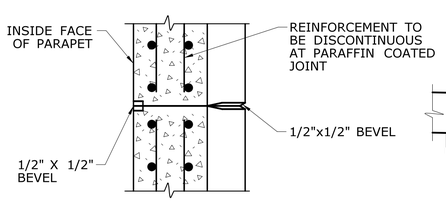

NOTE: PARAFFIN COATED JOINTS SHALL BE PAID UNDER THE ITEM 'CLASS "F" CONCRETE'.

SECTION N-N

PARAFFIN COATED JOINTS IN PARAPET

SCALE: 3/4" = 1'-0"

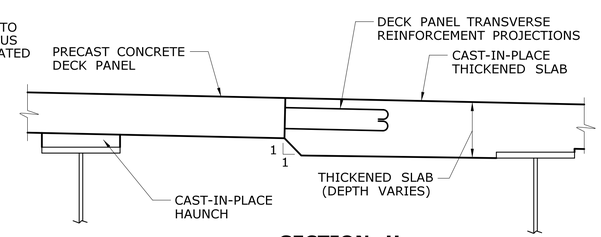

SECTION H

SCALE: ¾" = 1'-0"

NOTE:
CAST-IN-PLACE SLAB AND PRECAST CONCRETE DECK PANEL REINFORCING NOT SHOWN FOR CLARITY

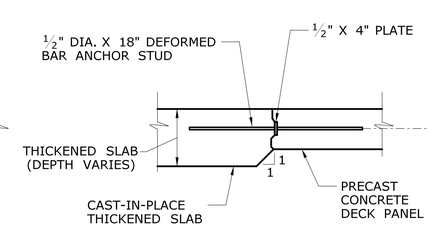

SECTION I

SCALE: ¾" = 1'-0"

NOTE:
CAST-IN-PLACE SLAB AND PRECAST CONCRETE DECK PANEL REINFORCING NOT SHOWN FOR CLARITY

NOTES:

1. CLASS "F" CONCRETE SHALL BE USED IN WINGWALL AND BRIDGE PARAPETS AND IN MEDIAN BARRIERS.
2. HIGH EARLY STRENGTH CONCRETE SHALL BE USED IN CLOSURE POURS AND SKEWED DECK ENDS HAVING A 28 DAYS STRENGTH = 4000 PSI.
3. REINFORCEMENT IN ALL CAST-IN-PLACE CONCRETE SHALL BE DEFORMED STEEL BARS - EPOXY COATED.
4. BEGIN AND END STATIONS SHOWN ON THIS SHEET ARE FOR THE LIMITS OF THE CAST-IN-PLACE SLAB.
5. SECTION 'F' APPLIES AT ALL ACUTE CORNERS.
6. SECTION 'D' IS IN THE NON-THICKENED SLAB PORTION.
7. THICKENED SLAB IN ACUTE CORNERS SHALL EXTEND OVER AT LEAST THREE GIRDER LINES.
8. ADDITIONAL #4 BARS TO BE PLACED IN CAST-IN-PLACE SLAB PORTIONS & ARE TO BE LOCATED AT TOP AND BOTTOM BETWEEN #5@12" LONGITUDINAL REINFORCEMENT, AT BOTH ABUTMENTS. SEE SECTION CS-25.
9. #5@9" BARS AT TOP ALONG THE SKEW IN ACUTE CORNERS. △1

ADDENDUM NO. 1

REV.	DATE	REVISION DESCRIPTION	SHEET NO.
△1	08/16/18	JOINT SPACING, NOTES & CALLOUTS BY ADDENDUM NO. 1	

THE INFORMATION, INCLUDING ESTIMATED QUANTITIES OF WORK, SHOWN ON THESE SHEETS IS BASED ON LIMITED INVESTIGATIONS BY THE STATE AND IS IN NO WAY WARRANTED TO INDICATE THE CONDITIONS OF ACTUAL QUANTITIES OF WORK WHICH WILL BE REQUIRED.

Plotted Date: 8/30/2018

DESIGNER/DRAFTER: MJ
CHECKED BY: JM
SCALE AS NOTED

STATE OF CONNECTICUT
DEPARTMENT OF TRANSPORTATION

Filename: ...\S_21_SB_MSH_BR00255_0152_0158_CAST_IN_PLACE_END OF DECK_PLAN.dgn

SIGNATURE/BLOCK:
STATE OF CONNECTICUT ABDUL-HAKIM SALAM No. 18180 LICENSED PROFESSIONAL ENGINEER

AI Engineers, Inc.
919 MIDDLE STREET
MIDDLETOWN, CT 06457
Phone: (860) 635-7740
Fax: (860) 635-7312

PROJECT TITLE:
REHABILITATION OF BRIDGE NO. 00255 I-395 OVER ROUTE 85

TOWN: **WATERFORD**

DRAWING TITLE: **CAST-IN-PLACE END OF DECK PLAN**

PROJECT NO. **152-158**
DRAWING NO. **S-21**
SHEET NO. **04.21.A1**

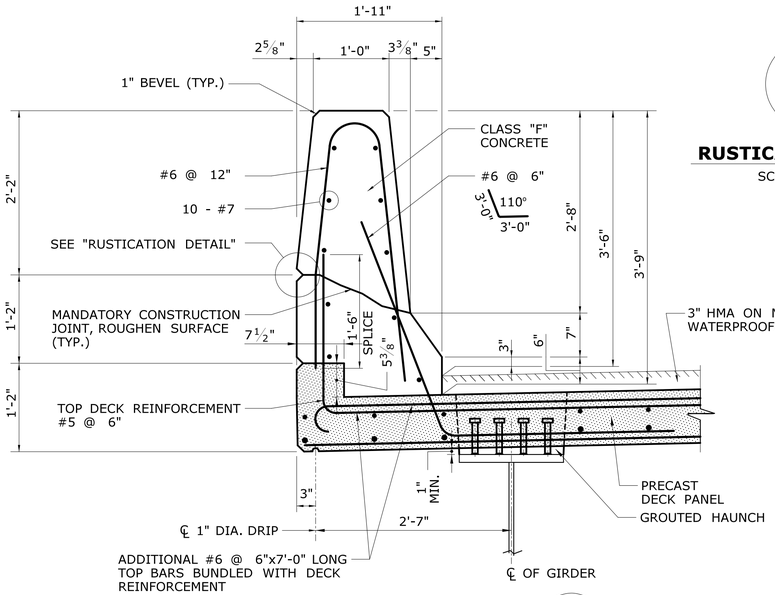

SECTION A / S-21
SCALE: 1" = 1'-0"

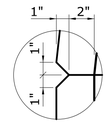

RUSTICATION DETAIL
SCALE: 1" = 1'-0"

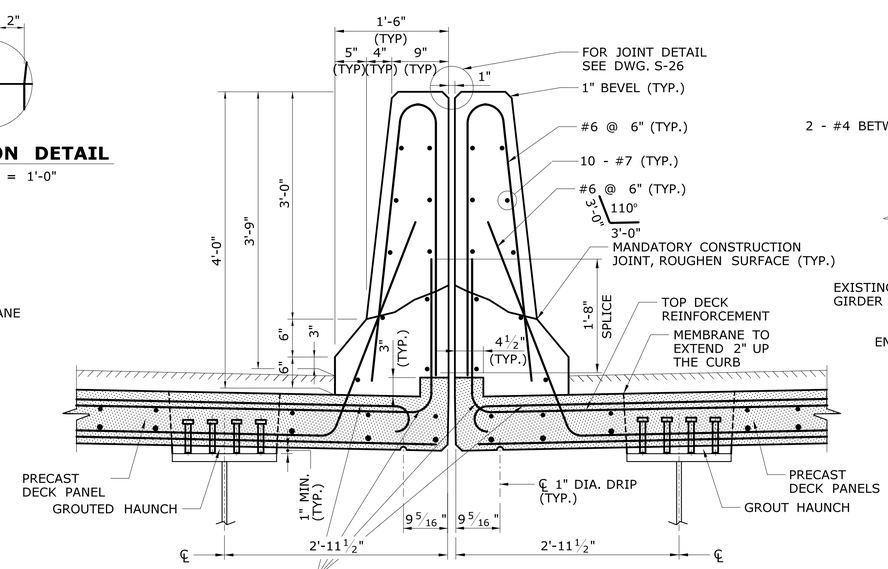

SECTION B / S-21
SCALE: 1" = 1'-0"

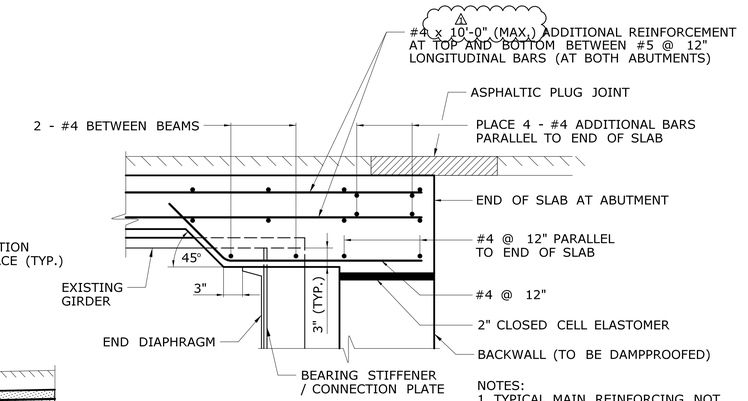

NOTES:
1. TYPICAL MAIN REINFORCING NOT SHOWN FOR CLARITY.
2. SECTION APPLIES IN BOTH ACUTE AND NON-ACUTE CORNERS.

SECTION C / S-21
SCALE: 1" = 1'-0"

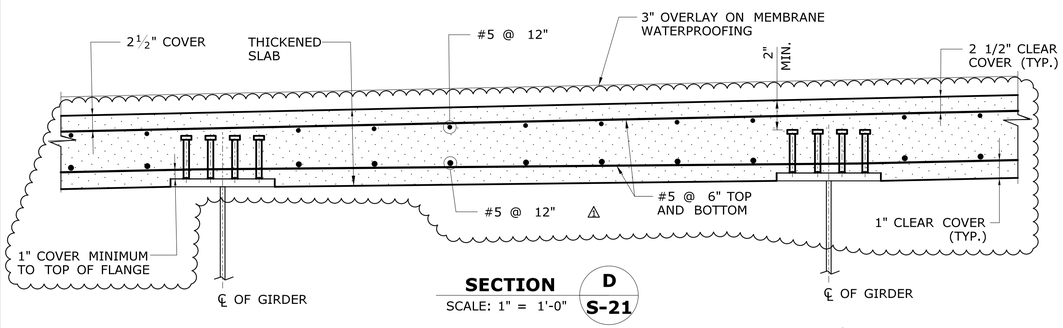

SECTION D / S-21
SCALE: 1" = 1'-0"

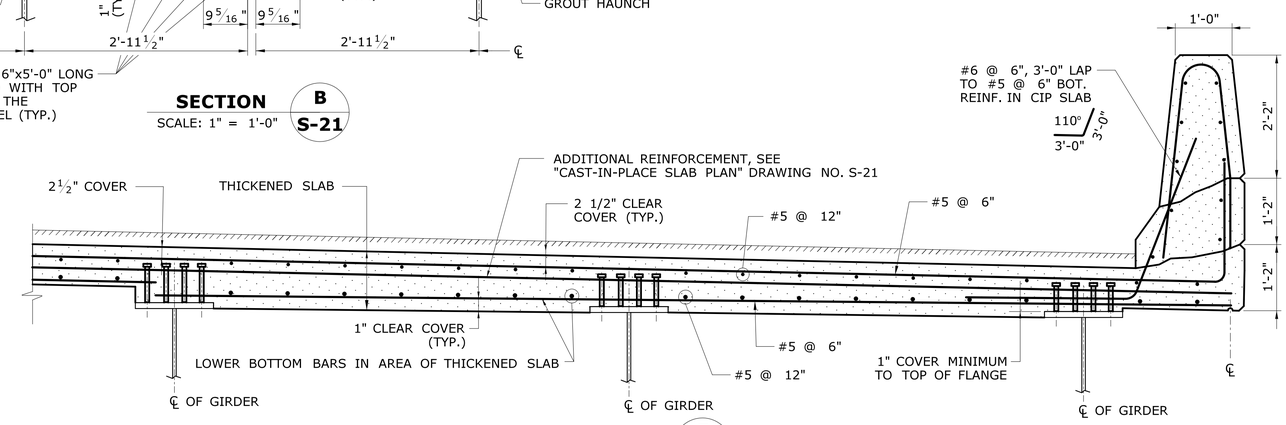

SECTION F / S-21
SCALE: 3/4" = 1'-0"

ADDITIONAL REINFORCEMENT AT ACUTE CORNER DETAIL

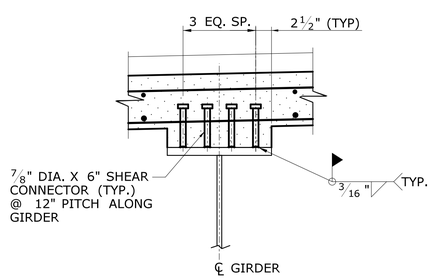

TYPICAL CAST-IN-PLACE SLAB SHEAR CONNECTOR DETAIL
SCALE: 1" = 1'-0"
NOTE: SIMILIAR FOR CLOSURE POUR ALONG G11.

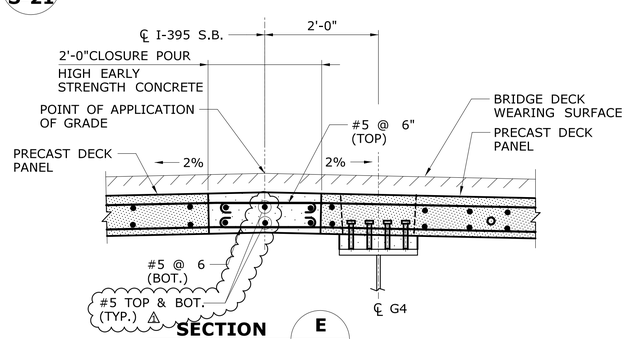

SECTION E / S-21
SCALE: 3/4" = 1'-0"

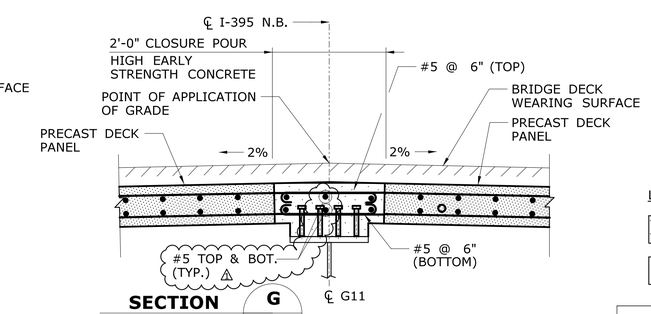

SECTION G / S-21
SCALE: 3/4" = 1'-0"

LEGEND:
- PRECAST CONCRETE DECK PANEL
- CAST IN PLACE CONCRETE

ADDENDUM NO. 1

REV.	DATE	REVISION DESCRIPTION	SHEET NO.
1	08/27/18	REVISED BY ADDENDUM NO. 1	

THE INFORMATION, INCLUDING ESTIMATED QUANTITIES OF WORK, SHOWN ON THESE SHEETS IS BASED ON LIMITED INVESTIGATIONS BY THE STATE AND IS IN NO WAY WARRANTED TO INDICATE THE CONDITIONS OF ACTUAL QUANTITIES OF WORK WHICH WILL BE REQUIRED.

Plotted Date: 8/30/2018

DESIGNER/DRAFTER: MJ
CHECKED BY: KA
SCALE AS NOTED

STATE OF CONNECTICUT
DEPARTMENT OF TRANSPORTATION

SIGNATURE/BLOCK: STATE OF CONNECTICUT MICHAEL J. KRUM No. 18195 LICENSED PROFESSIONAL ENGINEER

AI Engineers, Inc.
919 MIDDLE STREET
MIDDLETOWN, CT 06457
Phone: (860) 635-7740
Fax: (860) 635-7312

Filename: ...\S_25_SB_MSH_BR00255_0152_0158_CAST_IN_PLACE_PARAPET_BARRIER AND END OF DECK SLAB_DETAILS.dgn

PROJECT TITLE: REHABILITATION OF BRIDGE NO. 00255 I-395 OVER ROUTE 85

TOWN: WATERFORD

DRAWING TITLE: CIP PARAPET, BARRIER AND DECK END DETAILS

PROJECT NO. 152-158
DRAWING NO. S-25
SHEET NO. 04.25.A1