03 - HIGHWAYS
INDEX OF DRAWINGS

DRAWING NUMBER	DRAWING TITLE	DRAWING NUMBER	DRAWING TITLE
HWY-01	HIGHWAY INDEX OF DRAWINGS		
HWY-02	TYPICAL SECTION AND MISCELLANEOUS DETAILS		
HWY-03	MISCELLANEOUS DETAILS		
HWY-04	HIGHWAY PLAN		
HWY-05	ROUTE 133 PROFILE		

DESIGNED BY:

VN ENGINEERS, INC.
116 WASHINGTON AVE.
NORTH HAVEN, CT 06473
(203) 234-7862

Sofia Nirshberg
2018.08.13
10:26:20-04'00'

REV.	DATE	REVISION DESCRIPTION	SHEET NO.
-	-	-	-
-	-	-	-
-	-	-	-
-	-	-	-
-	-	-	-
-	-	-	-

THE INFORMATION, INCLUDING ESTIMATED QUANTITIES OF WORK, SHOWN ON THESE SHEETS IS BASED ON LIMITED INVESTIGATIONS BY THE STATE AND IS IN NO WAY WARRANTED TO INDICATE THE CONDITIONS OF ACTUAL QUANTITIES OF WORK WHICH WILL BE REQUIRED.

Plotted Date: 8/13/2018

DESIGNER/DRAFTER: **MDB**

CHECKED BY: **RSG**

STATE OF CONNECTICUT
DEPARTMENT OF TRANSPORTATION

Filename: ...\HWY_MSH_018-134_HWY-01.dgn

SIGNATURE/ BLOCK:

VN ENGINEERS INC.
Traffic • Infrastructure • Planning
116 WASHINGTON AVENUE
NORTH HAVEN, CT 06473
203.234.7862

PROJECT TITLE:
REHABILITATION OF BRIDGE NO. 01343 ROUTE 133 OVER HOUSATONIC RIVER

TOWN: **BROOKFIELD/BRIDGEWATER**

PROJECT NO. **18-134**

DRAWING TITLE: **HIGHWAY INDEX OF DRAWINGS**

DRAWING NO. **HWY-01**

SHEET NO. **03.01**

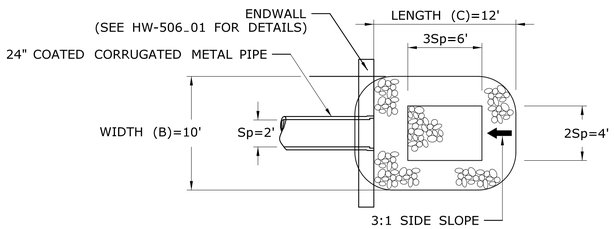

PLAN

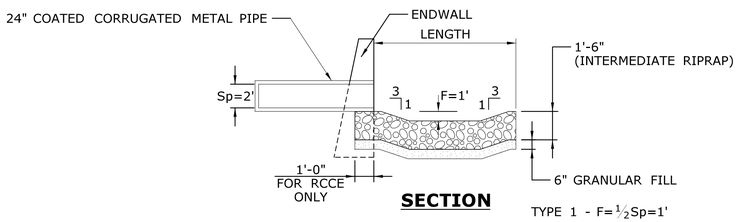

SECTION

TYPE 1 - F=½Sp=1'

PREFORMED SCOUR HOLE - TYPE 1
N.T.S.

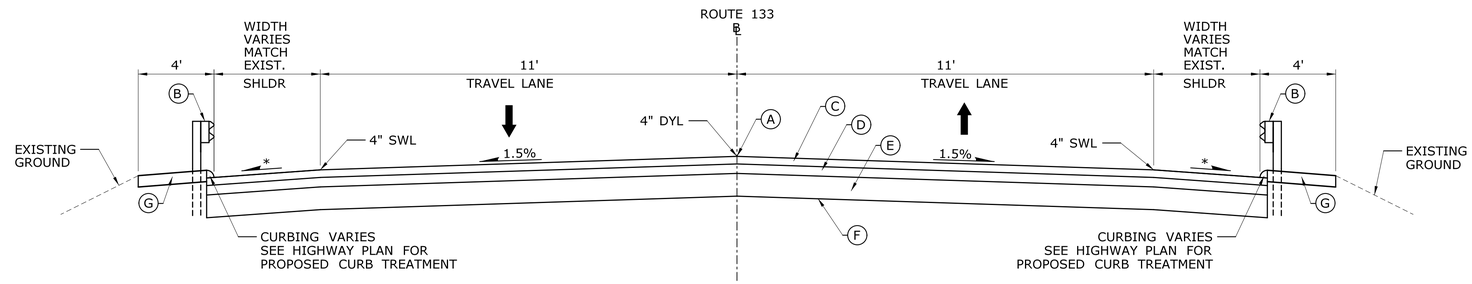

TYPICAL SECTION
N.T.S.

STA. 10+70 TO 11+99
STA. 20+47 TO 22+48

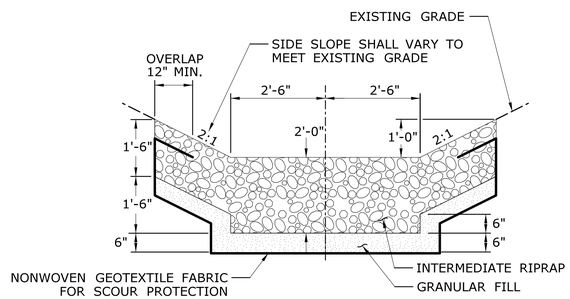

RIPRAP CHANNEL
N.T.S.

(A) POINT OF APPLICATION OF GRADE
(B) MBR (TYPE R-B MASH) (SEE HIGHWAY PLAN FOR DETAILS)
(C) 4" HMA S0.5 TRAFFIC LEVEL 2 (PLACED IN TWO EQUAL LIFTS)
(D) 5" HMA S1.0 TRAFFIC LEVEL 2 (PLACED IN A SINGLE LIFT)
(E) 12" SUBBASE
(F) FORMATION OF SUBGRADE
(G) 6" PROCESSED AGGREGATE

NOTE:
* = MATCH EXISTING CROSS SLOPE
DYL = 4" DOUBLE SOLID YELLOW CENTER LINE
SWL = 4" SOLID WHITE EDGE LINE

NOTES

1. INTERMEDIATE RIPRAP TO MEET THE REQUIREMENTS OF CTDOT FORM 817, ARTICLE M.12.02.
2. RIPRAP TO BE PAID FOR UNDER THE ITEM NUMBERS 0703011 - INTERMEDIATE RIPRAP (CY).
3. GEOTEXTILE TO BE PAID FOR UNDER THE ITEM NUMBER 0755013 - GEOTEXTILE EROSION CONTROL CLASS A (SY).

REV.	DATE	REVISION DESCRIPTION	SHEET NO.
-	-	-	-
-	-	-	-
-	-	-	-
-	-	-	-
-	-	-	-
-	-	-	-

THE INFORMATION, INCLUDING ESTIMATED QUANTITIES OF WORK, SHOWN ON THESE SHEETS IS BASED ON LIMITED INVESTIGATIONS BY THE STATE AND IS IN NO WAY WARRANTED TO INDICATE THE CONDITIONS OF ACTUAL QUANTITIES OF WORK WHICH WILL BE REQUIRED.

Plotted Date: 8/13/2018

DESIGNER/DRAFTER: **MDB**
CHECKED BY: **RSG**
SCALE AS NOTED

STATE OF CONNECTICUT
DEPARTMENT OF TRANSPORTATION

Filename: ...\HWY_MSH_018-134_HWY-02.dgn

SIGNATURE/
BLOCK:

VN ENGINEERS INC.
Traffic • Infrastructure • Planning
116 WASHINGTON AVENUE
NORTH HAVEN, CT 06473
203.234.7862

PROJECT TITLE:
REHABILITATION OF BRIDGE NO. 01343 ROUTE 133 OVER HOUSATONIC RIVER

TOWN: **BROOKFIELD/BRIDGEWATER**
PROJECT NO. **18-134**
DRAWING TITLE: **TYPICAL SECTION AND MISCELLANEOUS DETAILS**
DRAWING NO. **HWY-02**
SHEET NO. **03.02**

TYPE "C-G" CATCH BASIN

WHERE PRECAST CONCRETE UNIT IS USED FOR SUMP, THE TOP OF THE UNIT SHALL BE AT LEAST 6" BELOW THE BOTTOM OF THE PIPE OUTLETTING FROM THE CATCH BASIN.

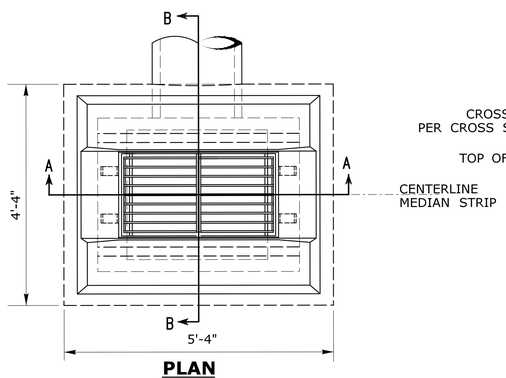

PLAN

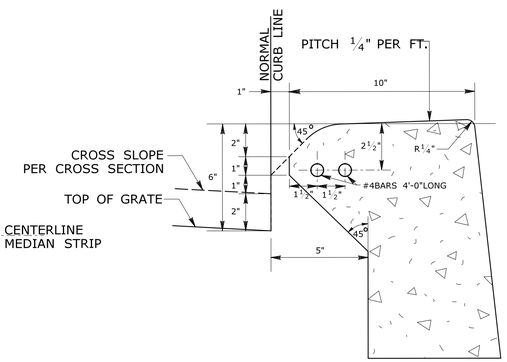

DETAIL OF CURB TYPE INLET

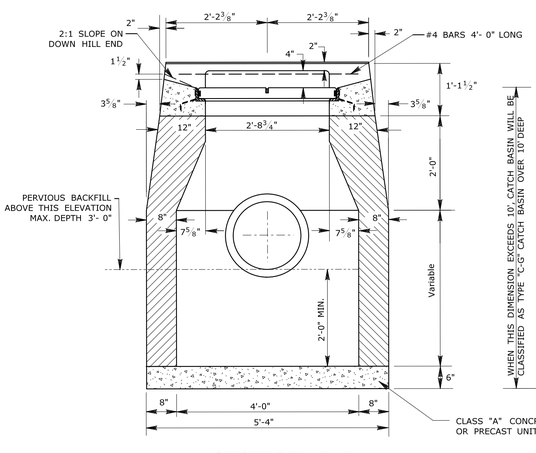

SECTION A-A

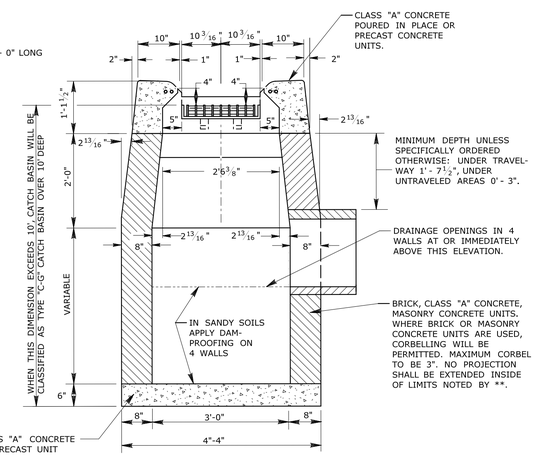

SECTION B-B

PAVED APRON FOR TYPE "C-G" CATCH BASIN

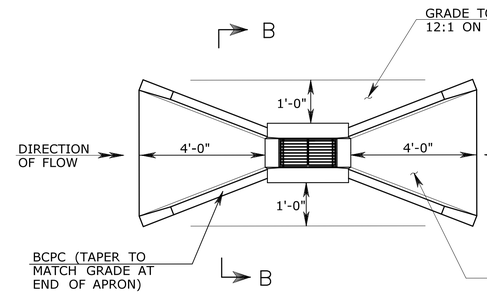

PLAN
SAG CONDITION

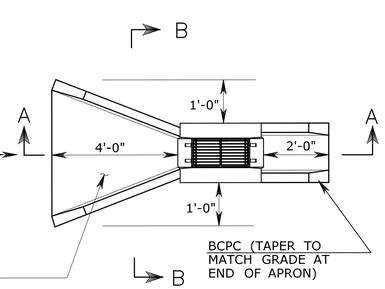

PLAN
ON GRADE

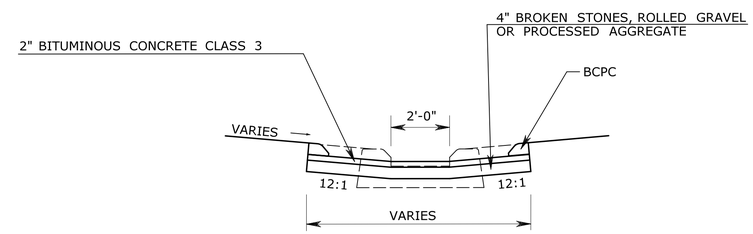

SECTION B-B

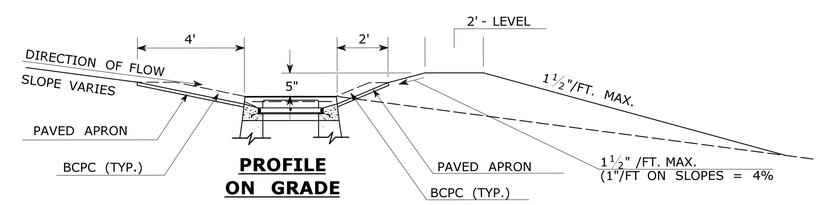

PROFILE
ON GRADE

SECTION A-A

NOTES:

1. PAVED APRON AND STONE, GRAVEL OR AGGREGATE BASE SHALL BE CONSTRUCTED AND PAID FOR IN ACCORDANCE WITH SECTION 8.03 "PAVED DITCH", EXCEPT THAT ALL REQUIRED EXCAVATION WILL BE PAID FOR AS "EARTH EXCAVATION".
2. BITUMINOUS CONCRETE PARK CURBING SHALL BE INCLUDED IN THE CONTRACT UNIT PRICE PER S.Y. FOR "PAVED DITCH".

REV.	DATE	REVISION DESCRIPTION	SHEET NO.
-	-	-	-
-	-	-	-
-	-	-	-
-	-	-	-
-	-	-	-
-	-	-	-

THE INFORMATION, INCLUDING ESTIMATED QUANTITIES OF WORK, SHOWN ON THESE SHEETS IS BASED ON LIMITED INVESTIGATIONS BY THE STATE AND IS IN NO WAY WARRANTED TO INDICATE THE CONDITIONS OF ACTUAL QUANTITIES OF WORK WHICH WILL BE REQUIRED.

Plotted Date: 8/13/2018

DESIGNER/DRAFTER: **MDB**
CHECKED BY: **RSG**
SCALE AS NOTED

STATE OF CONNECTICUT
DEPARTMENT OF TRANSPORTATION

Filename: ...\HWY_MSH_018-134_HWY-03.dgn

SIGNATURE/BLOCK:
VN ENGINEERS INC.
Traffic • Infrastructure • Planning
116 WASHINGTON AVENUE
NORTH HAVEN, CT 06473
203.234.7862

PROJECT TITLE:
REHABILITATION OF BRIDGE NO. 01343 ROUTE 133 OVER HOUSATONIC RIVER

TOWN: **BROOKFIELD/BRIDGEWATER**
PROJECT NO. **18-134**
DRAWING TITLE: **MISCELLANEOUS DETAILS**
DRAWING NO. **HWY-03**
SHEET NO. **03.03**

BEGIN STATE PROJECT NO. 18-134
STA. 10+70
N: 735475.27 E: 835333.04
CUT BITUMINOUS CONCRETE PAVEMENT
BEGIN FULL DEPTH RECONSTRUCTION
MEET EXISTING PAVEMENT

END STATE PROJECT NO. 18-134
STA. 22+48
N: 736643.46 E: 835483.66
CUT BITUMINOUS CONCRETE PAVEMENT
END FULL DEPTH RECONSTRUCTION
MEET EXISTING PAVEMENT

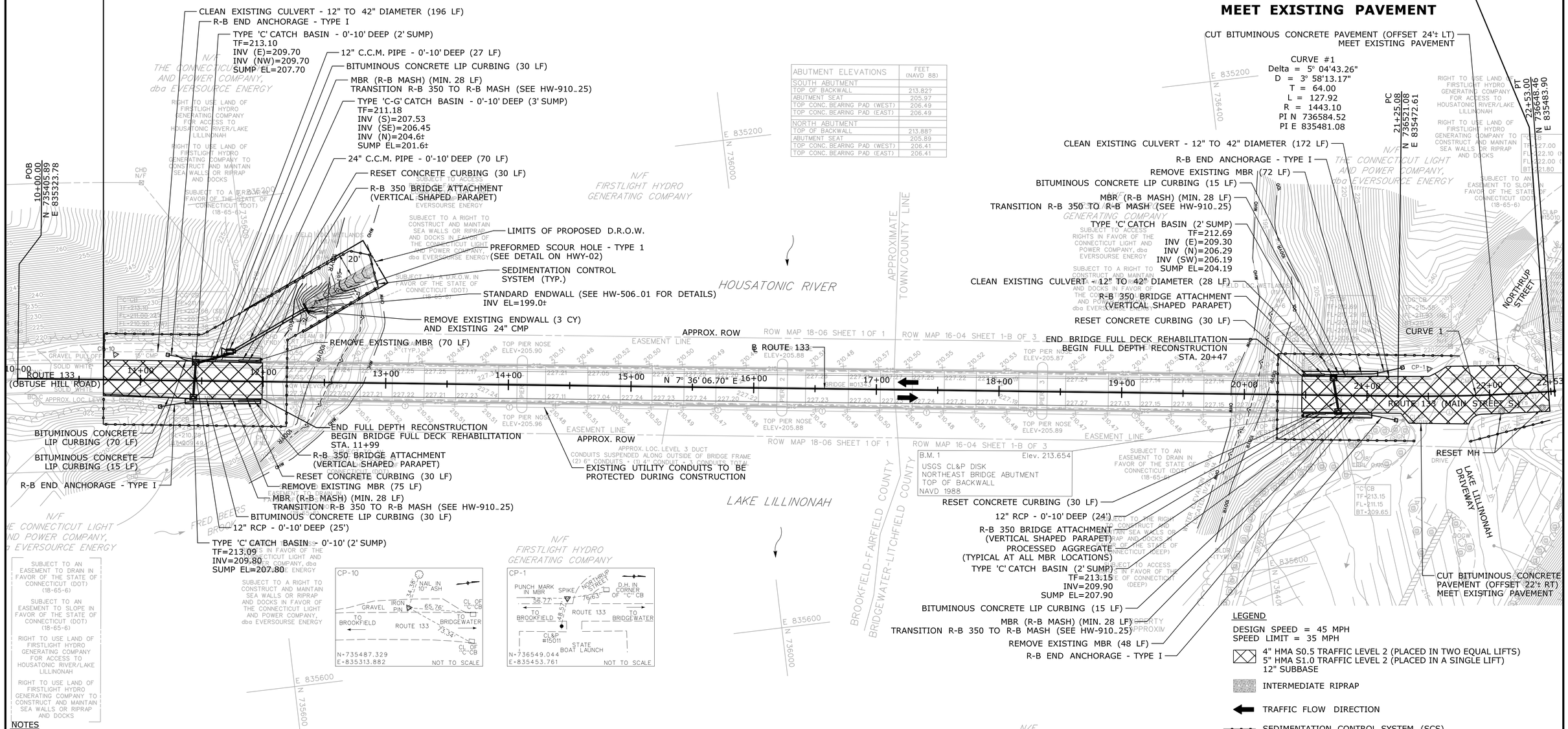

ABUTMENT ELEVATIONS	FEET (NAVD 88)
SOUTH ABUTMENT	
TOP OF BACKWALL	213.82?
ABUTMENT SEAT	205.97
TOP CONC. BEARING PAD (WEST)	206.49
TOP CONC. BEARING PAD (EAST)	206.49
NORTH ABUTMENT	
TOP OF BACKWALL	213.88?
ABUTMENT SEAT	205.89
TOP CONC. BEARING PAD (WEST)	206.41
TOP CONC. BEARING PAD (EAST)	206.41

LEGEND

DESIGN SPEED = 45 MPH
SPEED LIMIT = 35 MPH

4" HMA S0.5 TRAFFIC LEVEL 2 (PLACED IN TWO EQUAL LIFTS)
5" HMA S1.0 TRAFFIC LEVEL 2 (PLACED IN A SINGLE LIFT)
12" SUBBASE

INTERMEDIATE RIPRAP

TRAFFIC FLOW DIRECTION

SEDIMENTATION CONTROL SYSTEM (SCS)

NOTES

1. REMOVAL OF EXISTING ENDWALL SHALL BE PAID FOR UNDER ITEM NO. 0974001 - REMOVAL OF EXISTING MASONRY. THE PROPOSED ENDWALL WILL BE PAID FOR UNDER ITEM NO. 0601000 - CLASS "A" CONCRETE AND CONSTRUCTED IN ACCORDANCE WITH DETAILS SHOWN ON HW-506_01.

2. CONTRACTOR SHALL CLEAR AND GRUB AREA WITHIN THE SCS LIMITS AS NECESSARY TO FACILITATE THE WORK. ALL DISTURBED AREAS SHALL BE RESTORED WITH TURF ESTABLISHMENT PLACED ON 4 INCHES OF TOPSOIL. DISTURBED AREAS WITHIN THE WETLANDS SHALL BE RESTORED IN ACCORDANCE WITH AND PAID UNDER ITEM NO. 0950043A - WETLAND GRASS ESTABLISHMENT. SEE SPECIAL PROVISIONS FOR MORE INFORMATION.

CONSTRUCTION NOTES

TO LIMIT DISRUPTING THE TRAVELING PUBLIC THE DESIGN TEAM RECOMMENDS THE RECONSTRUCTION OF ROUTE 133 AT NORTHRUP STREET INTERSECTION ROADWAY BE SCHEDULED DURING AN ALLOWABLE ROUTE 133 CLOSURE AND DETOUR PERIOD. SEE PROSECUTION AND PROGRESS SPECIFICATION FOR DETAILS.

REV.	DATE	REVISION DESCRIPTION	SHEET NO.
-	-	-	-
-	-	-	-
-	-	-	-
-	-	-	-
-	-	-	-
-	-	-	-

THE INFORMATION, INCLUDING ESTIMATED QUANTITIES OF WORK, SHOWN ON THESE SHEETS IS BASED ON LIMITED INVESTIGATIONS BY THE STATE AND IS IN NO WAY WARRANTED TO INDICATE THE CONDITIONS OF ACTUAL QUANTITIES OF WORK WHICH WILL BE REQUIRED.

Plotted Date: 8/13/2018

DESIGNER/DRAFTER: **MDB**
CHECKED BY: **RSG**
SCALE IN FEET 0 40 80
SCALE 1"=40'

STATE OF CONNECTICUT
DEPARTMENT OF TRANSPORTATION

Filename: ...\HWY_MSH_018-134_HWY-04.dgn

SIGNATURE/BLOCK:
VN ENGINEERS INC.
Traffic • Infrastructure • Planning
116 WASHINGTON AVENUE
NORTH HAVEN, CT 06473
203.234.7862

PROJECT TITLE:
REHABILITATION OF BRIDGE NO. 01343 ROUTE 133 OVER HOUSATONIC RIVER

TOWN: **BROOKFIELD/BRIDGEWATER**
PROJECT NO. **18-134**
DRAWING TITLE: **HIGHWAY PLAN**
DRAWING NO. **HWY-04**
SHEET NO. **03.04**

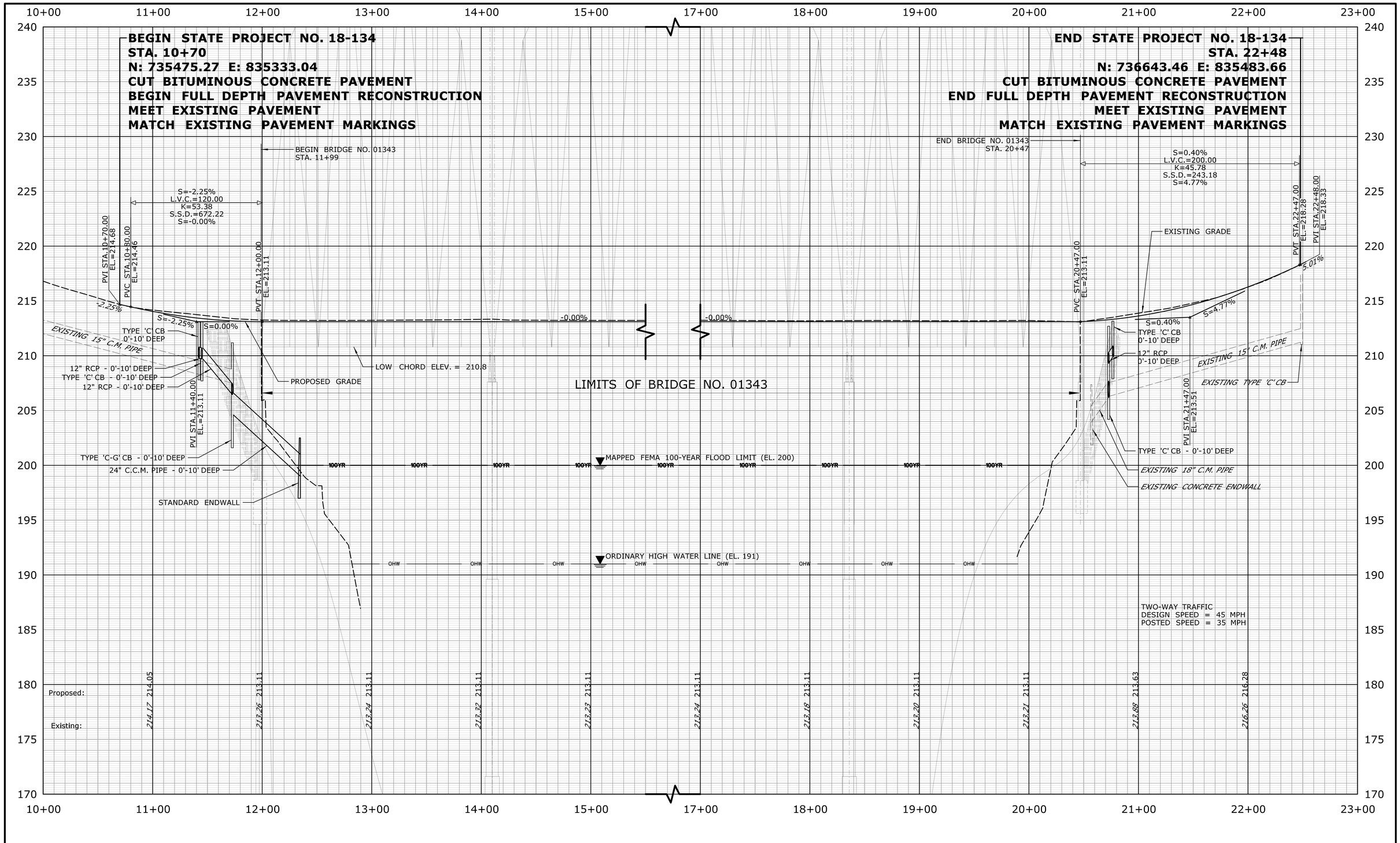

REV.	DATE	REVISION DESCRIPTION	SHEET NO.
-	-	-	-
-	-	-	-
-	-	-	-
-	-	-	-
-	-	-	-
-	-	-	-

THE INFORMATION, INCLUDING ESTIMATED QUANTITIES OF WORK, SHOWN ON THESE SHEETS IS BASED ON LIMITED INVESTIGATIONS BY THE STATE AND IS IN NO WAY WARRANTED TO INDICATE THE CONDITIONS OF ACTUAL QUANTITIES OF WORK WHICH WILL BE REQUIRED.

Plotted Date: 8/13/2018

DESIGNER/DRAFTER: **MDB**

CHECKED BY: **RSG**

HORIZ. SCALE IN FEET 0 40 80

VERT. SCALE IN FEET 0 4 8

STATE OF CONNECTICUT
DEPARTMENT OF TRANSPORTATION

Filename: ...\HWY_MSH_018-134_PRO-01.dgn

SIGNATURE/ BLOCK:

STATE OF CONNECTICUT · SCOTT A. HIRST · No. 18475 · LICENSED PROFESSIONAL ENGINEER

VN ENGINEERS INC.
Traffic • Infrastructure • Planning
116 WASHINGTON AVENUE
NORTH HAVEN, CT 06473
203.234.7862

PROJECT TITLE:

REHABILITATION OF BRIDGE NO. 01343 ROUTE 133 OVER HOUSATONIC RIVER

TOWN: **BROOKFIELD/BRIDGEWATER**

DRAWING TITLE: **ROUTE 133 PROFILE**

PROJECT NO. **18-134**

DRAWING NO. **HWY-05**

SHEET NO. **03.05**