05 - STRUCTURAL
INDEX OF DRAWINGS

DRAWING NUMBER	DRAWING TITLE	DRAWING NUMBER	DRAWING TITLE
S-01	STRUCTURAL INDEX OF DRAWINGS	S-21	STRUCTURAL STEEL REPAIRS ESTIMATED LENGTHS
S-02	GENERAL PLAN AND ELEVATION	S-22	DECK PLAN - PANEL LAYOUT
S-03	STRUCTURAL NOTES AND TYPICAL SECTION	S-23	DECK REPLACEMENT - PANEL DETAILS 1
S-04	STRUCTURAL QUANTITIES	S-24	DECK REPLACEMENT - PANEL DETAILS 2
S-05	SUBSTRUCTURE REPAIR DETAILS - 1	S-25	DECK REPLACEMENT - PANEL DETAILS 3
S-06	SUBSTRUCTURE REPAIR DETAILS - 2	S-26	DECK REPLACEMENT - DECK DETAILS 1
S-07	SUBSTRUCTURE REPAIR DETAILS - 3	S-27	DECK REPLACEMENT - DECK DETAILS 2
S-08	DECK JOINT DETAILS - AT PIER LOCATIONS	S-28	DECK REPLACEMENT - DECK DETAILS 3
S-09	DECK JOINT DETAILS - AT ABUTMENT LOCATIONS	S-29	HAUNCH TABLES AND TOP OF DECK ELEVATIONS
S-10	DECK JOINT DETAILS - HEADER RECONSTRUCTION	S-30	BRIDGE DECK DRAINAGE
S-11	STRUCTURAL STEEL REPAIRS NOTES, LEGEND & QUANTITIES	S-31	BRIDGE RAILING - 1
S-12	FRAMING PLAN SPAN 1	S-32	BRIDGE RAILING - 2
S-13	FRAMING PLAN SPAN 2	S-33	BRIDGE RAILING - 3
S-14	FRAMING PLAN SPAN 3	S-34	PAINTING AND CONTAINMENT
S-15	FRAMING PLAN SPAN 4		
S-16	STRUCTURAL STEEL REPAIR DETAILS - 1 BOTTOM CHORD		
S-17	STRUCTURAL STEEL REPAIR DETAILS - 2 GUSSET PLATES		
S-18	STRUCTURAL STEEL REPAIR DETAILS - 3 FLOORSYSTEM & END POST		
S-19	STRUCTURAL STEEL REPAIR DETAILS - 4 PORTAL/SWAY BRACING		
S-20	STRUCTURAL STEEL REPAIR DETAILS - 5 RIVET REPLACEMENT		

DESIGNED BY:
HARDESTY & HANOVER, LLC

STEVEN D. HARLACKER No. 22034 STATE OF CONNECTICUT

Steven D Harlacker
2018.08.28
13:49:03-04'00'

REV.	DATE	REVISION DESCRIPTION	SHEET NO.
-	-	-	-
-	-	-	-
-	-	-	-
-	-	-	-
-	-	-	-
-	-	-	-

THE INFORMATION, INCLUDING ESTIMATED QUANTITIES OF WORK, SHOWN ON THESE SHEETS IS BASED ON LIMITED INVESTIGATIONS BY THE STATE AND IS IN NO WAY WARRANTED TO INDICATE THE CONDITIONS OF ACTUAL QUANTITIES OF WORK WHICH WILL BE REQUIRED.

Plotted Date: 8/28/2018

DESIGNER/DRAFTER: **MRS**
CHECKED BY: **BNK**
SCALE AS NOTED

STATE OF CONNECTICUT
DEPARTMENT OF TRANSPORTATION

Filename: ...\SB_MSH_BR01343_018_134_FD_Index.dgn

SIGNATURE/ BLOCK:
STEVEN D. HARLACKER No. 22034 STATE OF CONNECTICUT
Hardesty & Hanover, LLC
59 Elm Street
New Haven, CT 06510
Hardesty &Hanover

PROJECT TITLE:
REHABILITATION OF BRIDGE NO. 01343 ROUTE 133 OVER HOUSATONIC RIVER

TOWN: **BROOKFIELD/BRIDGEWATER**
PROJECT NO. **18-134**
DRAWING TITLE: **STRUCTURAL INDEX OF DRAWINGS**
DRAWING NO. **S-01**
SHEET NO. **05.01**

BEGIN STATE PROJECT NO. 18-134
STA. 10+70
N: 735475.27 E: 835333.04
CUT BITUMINOUS CONCRETE PAVEMENT
BEGIN FULL DEPTH PAVEMENT RECONSTRUCTION
MEET EXISTING PAVEMENT
MATCH EXISTING PAVEMENT MARKINGS

END STATE PROJECT NO. 18-134
STA. 22+48
N: 736643.46 E: 835483.66
CUT BITUMINOUS CONCRETE PAVEMENT
END FULL DEPTH PAVEMENT RECONSTRUCTION
MEET EXISTING PAVEMENT
MATCH EXISTING PAVEMENT MARKINGS

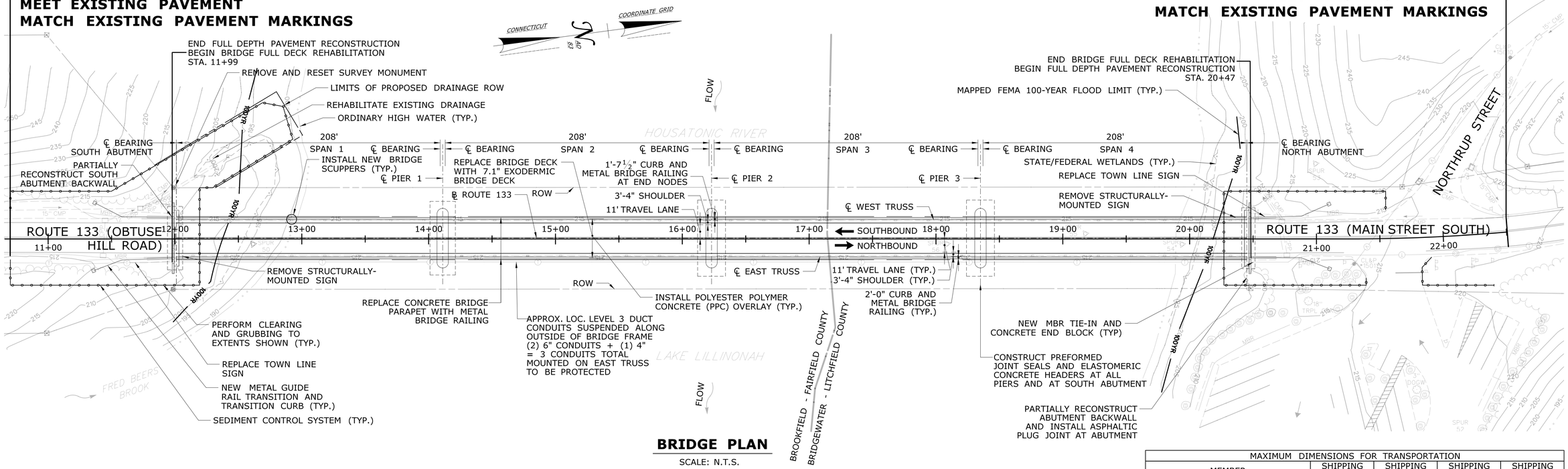

BRIDGE PLAN

SCALE: N.T.S.

MAXIMUM DIMENSIONS FOR TRANSPORTATION				
MEMBER	SHIPPING LENGTH	SHIPPING WIDTH	SHIPPING HEIGHT	SHIPPING WEIGHT
LB-2 REPAIR ANGLE (L4x3½x⅜)	31'-10.5"	-	-	290 LBS
TYPE BS2 EXODERMIC PECK PANEL	16'-4"	9'-0"	1'-6"	6500 LBS

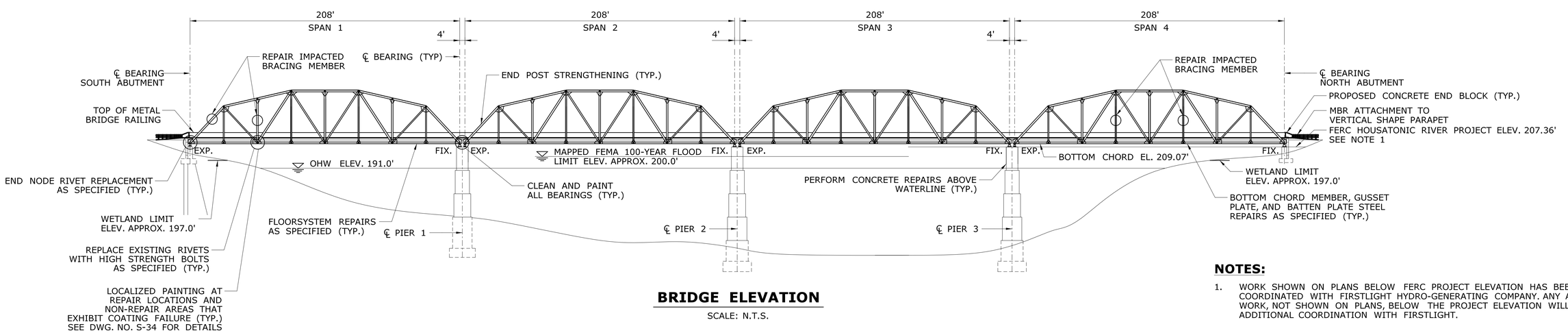

BRIDGE ELEVATION

SCALE: N.T.S.

NOTES:

1. WORK SHOWN ON PLANS BELOW FERC PROJECT ELEVATION HAS BEEN COORDINATED WITH FIRSTLIGHT HYDRO-GENERATING COMPANY. ANY ADDITIONAL WORK, NOT SHOWN ON PLANS, BELOW THE PROJECT ELEVATION WILL REQUIRE ADDITIONAL COORDINATION WITH FIRSTLIGHT.

REV.	DATE	REVISION DESCRIPTION	SHEET NO.
-	-	-	-
-	-	-	-
-	-	-	-
-	-	-	-
-	-	-	-
-	-	-	-

THE INFORMATION, INCLUDING ESTIMATED QUANTITIES OF WORK, SHOWN ON THESE SHEETS IS BASED ON LIMITED INVESTIGATIONS BY THE STATE AND IS IN NO WAY WARRANTED TO INDICATE THE CONDITIONS OF ACTUAL QUANTITIES OF WORK WHICH WILL BE REQUIRED.

Plotted Date: 8/28/2018

DESIGNER/DRAFTER: **BNK**
CHECKED BY: **SDH**
SCALE AS NOTED

STATE OF CONNECTICUT
DEPARTMENT OF TRANSPORTATION

Filename: ..\SB_MSH_BR01343_018_134_FD_GPE.dgn

SIGNATURE/BLOCK:
Hardesty & Hanover, LLC
59 Elm Street
New Haven, CT 06510

PROJECT TITLE:
REHABILITATION OF BRIDGE NO. 01343 ROUTE 133 OVER HOUSATONIC RIVER

TOWN: **BROOKFIELD/BRIDGEWATER**
PROJECT NO. **18-134**
DRAWING TITLE: **GENERAL PLAN AND ELEVATION**
DRAWING NO. **S-02**
SHEET NO. **05.02**

GENERAL NOTES:

SPECIFICATIONS: CONNECTICUT DEPARTMENT OF TRANSPORTATION STANDARD SPECIFICATIONS (CONNDOT FORM 817, 2016), SUPPLEMENTAL SPECIFICATIONS DATED JANUARY 2018, AND SPECIAL PROVISIONS.

DESIGN SPECIFICATIONS: AASHTO LRFD BRIDGE DESIGN SPECIFICATIONS, 2014 7TH EDITION (WITH 2016 INTERIM REVISIONS) AND AS SUPPLEMENTED BY THE CONNECTICUT DEPARTMENT OF TRANSPORTATION BRIDGE DESIGN MANUAL (2003) WITH REVISIONS DATED 2011.

ALLOWABLE DESIGN STRESSES:

CLASS 'F' CONCRETE BASED ON	f'c = 4,000 PSI
CLASS 'S' CONCRETE BASED ON	f'c = 3,000 PSI
HIGH EARLY STRENGTH CONCRETE BASED ON	f'c = 4,000 PSI
REINFORCEMENT (ASTM A615 GRADE 60)	fy = 60,000 PSI
STRUCTURAL STEEL (ASTM A709, GRADE 50 T2)	fy = 50,000 PSI

THE SPECIFIED CONCRETE STRENGTH USED IN DESIGN, f'c, OF CONCRETE COMPONENTS IS NOTED ABOVE. THE MINIMUM COMPRESSIVE STRENGTH OF CONCRETE IN THE CONSTRUCTED COMPONENTS SHALL CONFORM TO THE REQUIREMENTS OF "SECTION 6.01 CONCRETE FOR STRUCTURES".

LIVE LOAD: HL-93

PPC OVERLAY: THIS SHALL CONSIST OF ONE LIFT OF POLYESTER POLYMER CONCRETE ($^3/_4$" THICK).

FUTURE PAVING ALLOWANCE: NONE

PAINT: PAINT SHALL CONFORM TO THE REQUIREMENTS OF THE SPECIAL PROVISIONS, "LOCALIZED PAINT REMOVAL AND FIELD PAINTING OF EXISTING STEEL". THE COLOR OF THE TOPCOAT MATERIAL ON THE STRUCTURAL STEEL SHALL BE GREY, FEDERAL STANDARD COLOR NUMBER 26329 (APPROXIMATELY THE DEPARTMENT'S STANDARD BRIDGE COLOR NUMBER 606).

PAINTING LIMITS: SEE DWG. NO. S-34 FOR PAINTING LIMITS AND CONTAINMENT DETAILS.

TEMPERATURE: MEAN TEMPERATURE SHALL BE 60° FAHRENHEIT FOR DECK AND RAILING EXPANSION JOINT INSTALLATION.

DIMENSIONS: ALL DIMENSIONS ON PLANS ARE SHOWN IN FEET AND INCHES UNLESS OTHERWISE NOTED. WHEN DECIMALS ARE GIVEN TO LESS THAN THREE DECIMAL PLACES, THE OMITTED DIGITS SHALL BE ASSUMED ZEROES.

EXISTING DIMENSIONS: DIMENSIONS OF THE EXISTING STRUCTURE SHOWN ON THESE PLANS ARE FOR GENERAL REFERENCE ONLY. THEY HAVE BEEN TAKEN FROM THE ORIGINAL (PROJECT NO. 18-65) AND REHABILITATION (PROJECT NO. 16-97) DESIGN DRAWINGS AND ARE NOT GUARANTEED. THE CONTRACTOR SHALL TAKE ALL FIELD MEASUREMENTS NECESSARY TO ASSURE PROPER FIT OF THE FINISHED WORK AND SHALL ASSUME FULL RESPONSIBILITY FOR THEIR ACCURACY. WHEN SHOP DRAWINGS BASED ON FIELD MEASUREMENTS ARE SUBMITTED FOR APPROVAL, THE FIELD MEASUREMENTS SHALL BE INDICATED ON THE DRAWINGS AND SHALL ALSO BE SUBMITTED FOR REFERENCE BY THE REVIEWER.

ELEVATIONS: ELEVATIONS SHOWN ARE TAKEN FROM ORIGINAL DESIGN PLANS AND DISTRICT 4 SURVEY.

TRAFFIC: ALL WORK SHALL BE DONE IN ACCORDANCE WITH THE SPECIAL PROVISIONS, ITEM NO. 0971001A "MAINTENANCE AND PROTECTION OF TRAFFIC" AND "SECTION 1.08 - PROSECUTION AND PROGRESS", AND CONSTRUCTION STAGES SHOWN ON THE PLANS.

UTILITIES: THE CONTRACTOR SHALL VERIFY THE SIZE AND LOCATION OF ALL UTILITIES WITHIN THE PROJECT LIMITS PRIOR TO THE START OF CONSTRUCTION AND SHALL TAKE NECESSARY PRECAUTIONS WHEN WORKING NEAR UTILITIES SO AS TO NOT DISTURB THEM OR PLACE ANY LOAD OR EQUIPMENT ON THEM, AND IS TO BE PAID FOR AS ITEM NO. 0603081A. ALL UTILITY COMPANIES SHALL BE NOTIFIED 48 HOURS PRIOR TO ANY WORK AFFECTING CABLES, CONDUITS, OR OTHER UTILITIES.

EXISTING PLANS: INFORMATION PERTAINING TO THE EXISTING STRUCTURE IS BASED ON EXISTING PLANS, WHICH ARE AVAILABLE FOR INSPECTION AT THE CONNECTICUT DEPARTMENT OF TRANSPORTATION PLANS OFFICE, 160 PASCONE PLACE, NEWINGTON, CT. USE OF EXISTING PLANS IS AT THE CONTRACTOR'S RISK. THE CONTRACTOR SHALL FIELD VERIFY LOCATIONS, DIMENSIONS AND ELEVATIONS WHICH CAN AFFECT THE SATISFACTORY COMPLETION OF THE PROPOSED WORK. SUCH FIELD VERIFICATION SHALL BE PERFORMED BEFORE SHOP DRAWINGS ARE SUBMITTED.

BRIDGE IDENTIFICATION PLACARDS: THE CONTRACTOR SHALL PROVIDE AND INSTALL NEW BRIDGE IDENTIFICATION SIGNS AT THE LEADING END OF EACH BRIDGE PARAPET ON THE TRAFFIC SIDE. THE SIGNS SHALL BE FABRICATED WITH 40 GAUGE ALUMINUM SHEET METAL. THE SIGNS SHALL BE 4" X 12" WITH 3" WHITE RETROREFLECTIVE BLOCK LETTERS ON GREEN RETROREFLECTIVE SHEETING. EACH SIGN SHALL READ: 01343. ALL COSTS ASSOCIATED WITH PROVIDING AND INSTALLING THE BRIDGE SIGNS SHALL BE COVERED UNDER THE ITEM "SIGN FACE - SHEET ALUMINUM (TYPE IV RETROREFLECTIVE SHEETING)". THE FINAL LOCATION AND ATTACHMENT METHOD FOR THE SIGNS SHALL BE APPROVED BY THE ENGINEER PRIOR TO INSTALLATION.

CONCRETE NOTES:

PRE-CAST CONCRETE: THE PRE-CAST PORTIONS OF THE EXODERMIC DECK AND RAILING END BLOCKS SHALL BE CLASS "F" CONCRETE MODIFIED WITH $^3/_8$" MAXIMUM COARSE AGGREGATE.

CLASS "S" CONCRETE: CLASS "S" CONCRETE SHALL BE USED FOR PATCHING SUBSTRUCTURE COMPONENTS.

CLASS "F" CONCRETE: CLASS "F" CONCRETE SHALL BE USED FOR THE RAILING END BLOCKS.

HIGH EARLY STRENGTH CONCRETE: HIGH EARLY STRENGTH CONCRETE SHALL BE USED FOR EXODERMIC DECK CLOSURE POURS, CURBING, AND HEADER RECONSTRUCTION.

CONCRETE DISTRIBUTION		
SUPERSTRUCTURE	C.Y.	500
SUBSTRUCTURE	C.Y.	22
FOOTINGS	C.Y.	0
TOTAL	C.Y.	522

JOINT SEAL: SEE SPECIAL PROVISIONS AND DWG. NO. S-08 AND S-09.

EXPOSED EDGES: EXPOSED EDGES OF CONCRETE SHALL BE BEVELED 1" X 1" UNLESS DIMENSIONED OTHERWISE.

CONCRETE NOTES, CONT.:

CONCRETE COVER: ALL REINFORCEMENT SHALL HAVE TWO INCHES COVER UNLESS DIMENSIONED OTHERWISE.

REINFORCEMENT: ALL REINFORCEMENT SHALL BE ASTM A615 GRADE 60. REINFORCEMENT IN PRECAST EXODERMIC DECK PANELS SHALL BE GALVANIZED, ALL OTHER REINFORCEMENT SHALL BE EPOXY-COATED.

REINFORCEMENT LAP SPLICES: UNLESS OTHERWISE NOTED ON THE CONSTRUCTION DRAWINGS, ALL STEEL REINFORCING BARS SHALL BE LAPPED AS FOLLOWS:
#5 BARS: 36"
#4 BARS: 24"

CONSTRUCTION JOINTS: CONSTRUCTION JOINTS, OTHER THAN THOSE SHOWN ON THE PLANS, WILL NOT BE PERMITTED WITHOUT THE PRIOR APPROVAL OF THE ENGINEER.

STRUCTURAL STEEL NOTES:

1. PLATED STEEL REPAIRS:
   STRUCTURAL STEEL REPAIR PLATES (LOW ALLOY) FOR FRACTURE CRITICAL AND NON-FRACTURE CRITICAL BRIDGE MEMBERS SHALL CONFORM TO ASTM A709 GRADE 50 T2.

   EXODERMIC DECK:
   STRUCTURAL TEES, BARS AND MISC. PLATES:
   ASTM A572/A709 GRADE 50
   GALVANIZED IN ACCORDANCE WITH ASTM A123

   BRIDGE RAILING MEMBERS:
   RAIL BARS: ASTM A500, GRADE B
   RAIL POSTS: ASTM A709, GRADE 50

2. HIGH STRENGTH BOLTS FOR PLATED STEEL REPAIRS SHALL CONFORM TO ASTM F3125, GRADE A325 AND SHALL BE MECHANICALLY GALVANIZED AS SPECIFIED IN ASTM B695. HEX NUTS SHALL CONFORM TO ASTM A563, GRADE DH OR DH3, OR ASTM A194, GRADE 2H. HARDENED STEEL WASHERS SHALL CONFORM TO ASTM F436.

   ALL BOLT DIAMETERS SHALL BE $^7/_8$" UNLESS OTHERWISE NOTED. HARDENED WASHERS SHALL BE PLACED UNDER THE TURNED ELEMENT. ALL BOLTS SHALL BE LUBRICATED PRIOR TO THE INSTALLATION TO ENSURE FREE ROTATION OF THE NUT ON THE BOLT THREADS. BOLT THREADS SHALL BE EXCLUDED FROM THE SHEAR PLANE.

   ALL BOLT HOLES IN NEW STRUCTURAL STEEL PLATES AT EXISTING FASTENER HOLES SHALL BE OVERSIZED. ALL OTHER BOLT HOLES SHALL BE STANDARD SIZE.

   A MINIMUM EDGE DISTANCE OF $1^1/_2$" SHALL BE MAINTAINED IN ALL NEW STEEL PLATES, EXCEPT WHERE EXISTING CONDITIONS REDUCE POSSIBLE EDGE DISTANCE, MAINTAIN A MINIMUM OF $1^1/_8$".

3. BOLT SPACING & EDGE DISTANCE REQUIREMENTS, UNLESS APPROVED BY THE ENGINEER, SHALL MEET THE REQUIREMENTS OF AASHTO ARTICLE 6.13.2.6.

4. GUSSET AND CONNECTION PLATES NOT DETAILED AS PER DRAWINGS SHALL MEET REQUIREMENTS OF AASHTO ARTICLE 6.14.2.8.

5. THE STRUCTURAL STEEL FABRICATORS SHALL BE CERTIFIED UNDER THE AISC QUALITY CONTROL PROGRAM, CATEGORY SBR, SIMPLE BRIDGE FABRICATION CERTIFICATION.

6. SEE SPECIAL PROVISIONS AND SPECIFICATIONS FOR "SECTION 6.03 - STRUCTURAL STEEL" AND "STRUCTURAL STEEL REPAIRS (SITE NO. 1)" FOR FURTHER REQUIREMENTS.

7. CHARPY V-NOTCH REQUIREMENTS FOR ALL STRUCTURAL STEEL WILL BE AS FOLLOW:

THICKNESS, INCHES	FCM STEEL	OTHER STEEL
UP TO 2" (INCL)	25 FT-LBS @ 40°	15 FT-LBS @ 40°
OVER 2"	25 FT-LBS @ 40°	20 FT-LBS @ 40°

8. SHIMS AND FILL PLATES ARE SHOWN ON THE PLANS TO PROVIDE FOR VARIOUS ADJUSTMENTS EXPECTED TO BE REQUIRED DURING THE ERECTION OF THE STEEL. ANY ADDITIONAL SHIMS OR HOLES, WHICH THE FABRICATOR FEELS ARE NECESSARY FOR PROPER FIELD ADJUSTMENT, SHALL BE INCLUDED IN THE SHOP DETAILS.

9. THE CONTRACTOR SHALL TAKE THE PROPER PRECAUTIONS TO ENSURE THE STABILITY OF ALL STRUCTURAL ELEMENTS UNTIL THE TOTAL STRUCTURE IS COMPLETE.

10. IT SHALL BE THE CONTRACTOR'S RESPONSIBILITY TO PROVIDE ANY ADDITIONAL TEMPORARY BRACING REQUIRED TO MAINTAIN THE GEOMETRY OF INDIVIDUAL STRINGERS AND FLOORBEAMS, AS WELL AS THE TOTAL STEEL STRUCTURE, THROUGHOUT ALL PHASES OF CONSTRUCTION INCLUDING DEMOLITION AND PAINTING.

11. PROVIDE EPOXY RESIN PASTE BETWEEN REPAIR PLATES AT DETERIORATED SURFACES. LARGE HOLES SHALL BE NEATLY TRIMMED BACK TO A MINIMUM STEEL THICKNESS OF $^1/_8$" AND A FILL PLATE PLACED IN THE PERFORATION.

12. STEEL PLATES OF THICKNESS 2 INCHES AND GREATER SHALL BE TESTED FOR LAMINATIONS PER ASTM A435.

13. WELDING DETAILS, PROCEDURES, AND TESTING METHODS FOR PERMANENT AND TEMPORARY MEMBERS THAT SUPPORT LIVE LOAD SHALL CONFORM TO AWS D1.5-(2015) "BRIDGE WELDING CODE."

14. SHOP WELDS SHALL REQUIRE MAGNETIC PARTICLE TESTING IN ACCORDANCE WITH THE SPECIFICATION "STRUCTURAL STEEL REPAIRS (SITE NO. 1)".

15. MULTIPLE PASS WELDS INSPECTED BY THE MAGNETIC PARTICLE METHOD SHALL HAVE EACH PASS OR LAYER INSPECTED AND ACCEPTED BEFORE PROCEEDING TO THE NEXT PASS OR LAYER, AS DETERMINED BY THE RESIDENT ENGINEER.

16. ALL GROOVE WELDS SHALL BE COMPLETE JOINT PENETRATION (CJP). JOINT PREPARATION IS OPTIONAL WITH THE FABRICATOR, SUBJECT TO AWS REQUIREMENTS. WHERE BACKING BAR STRIPS ARE TO BE LEFT IN PLACE, THEY SHALL BE CONTINUOUS FOR THE FULL LENGTH OF THE WELD. ALL JOINTS IN THE BACKING BARS SHALL BE MADE WITH COMPLETE PENETRATION BUTT WELDS AND INSPECTED BY THE ULTRASONIC METHOD PRIOR TO ASSEMBLY WITH PLATES.

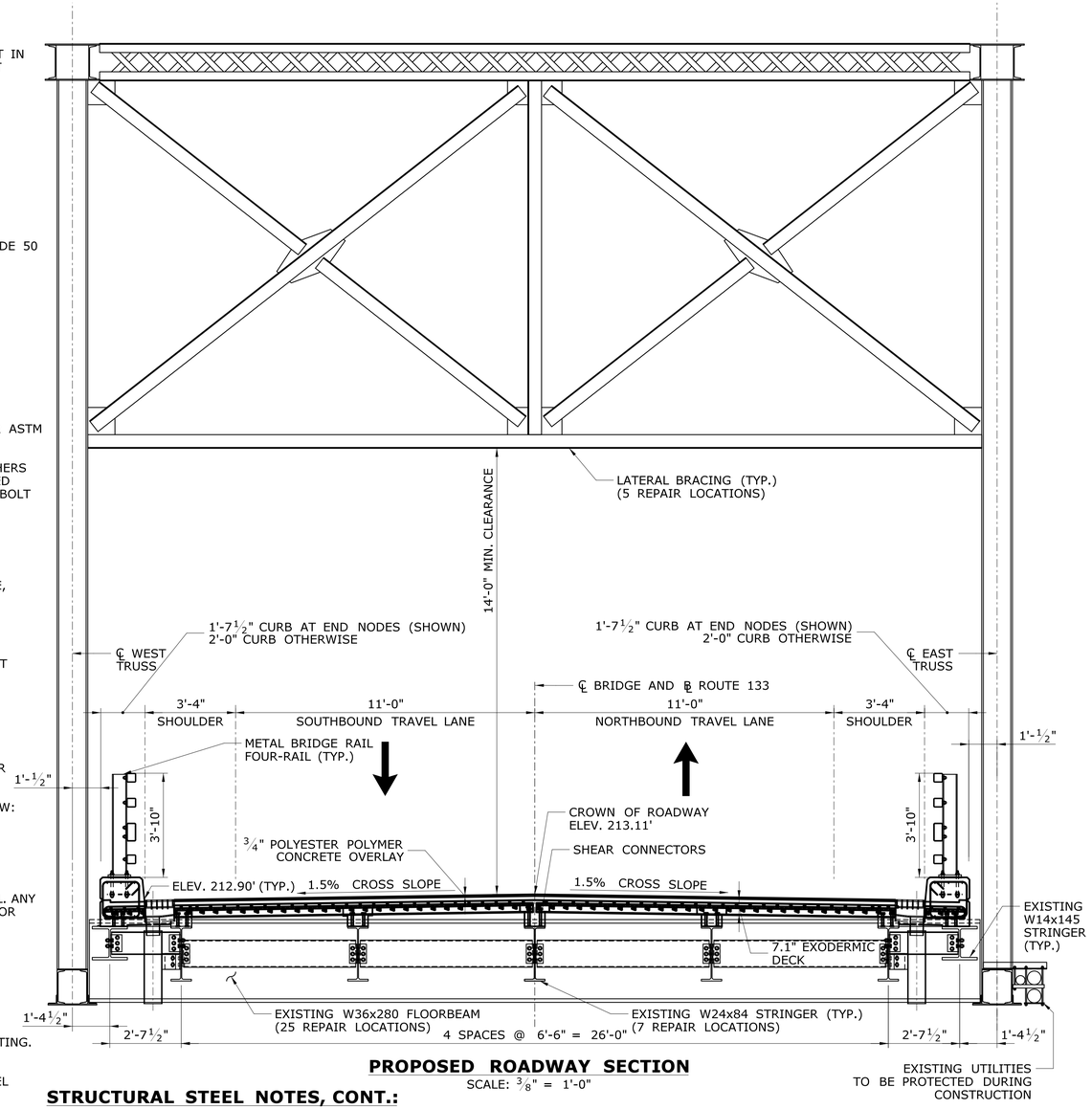

PROPOSED ROADWAY SECTION
SCALE: $^3/_8$" = 1'-0"

STRUCTURAL STEEL NOTES, CONT.:

17. NO FIELD WELDING WILL BE PERMITTED BESIDES SHEAR CONNECTOR TO STRINGER WELDS AND SUBSTRUCTURE REINFORCEMENT LAP SPLICE WELDS UNLESS OTHERWISE SHOWN ON THE PLANS.

INSPECTION OF FIELD WELDS		
METHODS	UNIT	QUANTITY
ULTRASONIC	INCH	--
MAGNETIC PARTICLE	FEET	--

18. NO WELDED ATTACHMENTS WILL BE PERMITTED, EXCEPT THOSE SPECIFICALLY SHOWN ON THE PLANS.

NOTICE TO BRIDGE INSPECTORS	
THE DEPARTMENT'S BRIDGE SAFETY PROCEDURES REQUIRE THIS BRIDGE TO BE INSPECTED FOR, BUT NOT LIMITED TO, ALL APPROPRIATE COMPONENTS INDICATED IN THE GOVERNING MANUALS FOR BRIDGE INSPECTION. ATTENTION MUST BE GIVEN TO INSPECTING THE FOLLOWING SPECIAL COMPONENTS AND DETAILS. (THE LISTING FOR COMPONENTS FOR SPECIFIC ATTENTION SHALL NOT BE CONSTRUED TO REDUCE THE IMPORTANCE OF INSPECTION OF ANY OTHER COMPONENT OF THE STRUCTURE.) THE FREQUENCY OF INSPECTION OF THIS STRUCTURE SHALL BE IN ACCORDANCE WITH THE GOVERNING MANUALS FOR BRIDGE INSPECTION, UNLESS OTHERWISE DIRECTED BY THE MANAGER OF BRIDGE SAFETY AND EVALUATION.	
COMPONENT OR DETAIL	STRUCTURE SHEET REFERENCE

REV.	DATE	REVISION DESCRIPTION	SHEET NO.
-	-	-	-
-	-	-	-
-	-	-	-
-	-	-	-
-	-	-	-
-	-	-	-

THE INFORMATION, INCLUDING ESTIMATED QUANTITIES OF WORK, SHOWN ON THESE SHEETS IS BASED ON LIMITED INVESTIGATIONS BY THE STATE AND IS IN NO WAY WARRANTED TO INDICATE THE CONDITIONS OF ACTUAL QUANTITIES OF WORK WHICH WILL BE REQUIRED.

Plotted Date: 8/28/2018

DESIGNER/DRAFTER: SS
CHECKED BY: BNK
SCALE AS NOTED

STATE OF CONNECTICUT
DEPARTMENT OF TRANSPORTATION

Filename: ...\SB_MSH_BR01343_018_134_FD_General_Notes.dgn

SIGNATURE/BLOCK:
Hardesty & Hanover, LLC
59 Elm Street
New Haven, CT 06510
Hardesty & Hanover

PROJECT TITLE:
REHABILITATION OF BRIDGE NO. 01343 ROUTE 133 OVER HOUSATONIC RIVER

TOWN: **BROOKFIELD/BRIDGEWATER**
PROJECT NO. **18-134**
DRAWING TITLE: **STRUCTURAL NOTES AND TYPICAL SECTION**
DRAWING NO. **S-03**
SHEET NO. **05.03**

QUANTITIES

ITEM	UNIT	Total
WATER TRANSPORTATION FOR INSPECTION PERSONNEL	DAY	203
WATER RESCUE OPERATIONS	LS	LS
STRUCTURE EXCAVATION-EARTH (COMPLETE)	C.Y.	11
PERVIOUS STRUCTURE BACKFILL	C.Y.	11
POLYESTER POLYMER CONCRETE OVERLAY	S.F.	23860
REMOVAL OF CONCRETE BRIDGE DECK	LS	LS
BRIDGE SCUPPER	EA.	112
ELASTOMERIC CONCRETE HEADER	C.F.	32
ASPHALTIC PLUG EXPANSION JOINT SYSTEM	C.F.	36
PREFORMED JOINT SEAL	L.F.	143
CLASS "S" CONCRETE	C.F.	12
HIGH EARLY STRENGTH CONCRETE	C.Y.	10
CLASS "F" CONCRETE	C.Y.	11
EPOXY INJECTION CRACK REPAIR	L.F.	24
EXODERMIC DECK	S.F.	27430
DEFORMED STEEL BARS - EPOXY COATED	LB.	2500
DOWEL BAR SPLICER SYSTEM - EPOXY COATED	EA.	14
DRILLING HOLES AND GROUTING DOWELS	EA.	152
STRUCTURAL STEEL REPAIRS (SITE NO. 1)	CWT.	482
CLASS 1 CONTAINMENT AND COLLECTION OF SURFACE PREPARATION DEBRIS (SITE NO. 1)	LS	LS
REPLACE REMOVED OR MISSING RIVETS AND BOLTS WITH HIGH STRENGTH BOLTS	ea.	78
LOCALIZED PAINT REMOVAL AND FIELD PAINTING OF EXISTING STEEL	s.f.	2600
TEMPORARY PRECAST CONCRETE BARRIER CURB (STRUCTURE)	l.f.	530
RELOCATED TEMPORARY PRECAST CONCRETE BARRIER CURB(STRUCTURE)	l.f.	1580
METAL BRIDGE RAIL - FOUR RAIL	l.f.	1680
CONSTRUCTION FIELD OFFICE, MEDIUM	mo.	7
REMOVAL OF EXISTING MASONRY	c.y.	16

REV.	DATE	REVISION DESCRIPTION	SHEET NO.
-	-	-	-
-	-	-	-
-	-	-	-
-	-	-	-
-	-	-	-
-	-	-	-

THE INFORMATION, INCLUDING ESTIMATED QUANTITIES OF WORK, SHOWN ON THESE SHEETS IS BASED ON LIMITED INVESTIGATIONS BY THE STATE AND IS IN NO WAY WARRANTED TO INDICATE THE CONDITIONS OF ACTUAL QUANTITIES OF WORK WHICH WILL BE REQUIRED.

Plotted Date: 8/28/2018

DESIGNER/DRAFTER: SS

CHECKED BY: BNK

SCALE AS NOTED

STATE OF CONNECTICUT
DEPARTMENT OF TRANSPORTATION

Filename: ...\SB_MSH_BR01343_018_134_FD_Utility_Protection.dgn

SIGNATURE/ BLOCK:

Hardesty & Hanover, LLC
59 Elm Street
New Haven, CT 06510

PROJECT TITLE:
REHABILITATION OF BRIDGE NO. 01343 ROUTE 133 OVER HOUSATONIC RIVER

TOWN: BROOKFIELD/BRIDGEWATER

PROJECT NO. 18-134

DRAWING TITLE: STRUCTURAL QUANTITIES

DRAWING NO. S-04

SHEET NO. 05.04

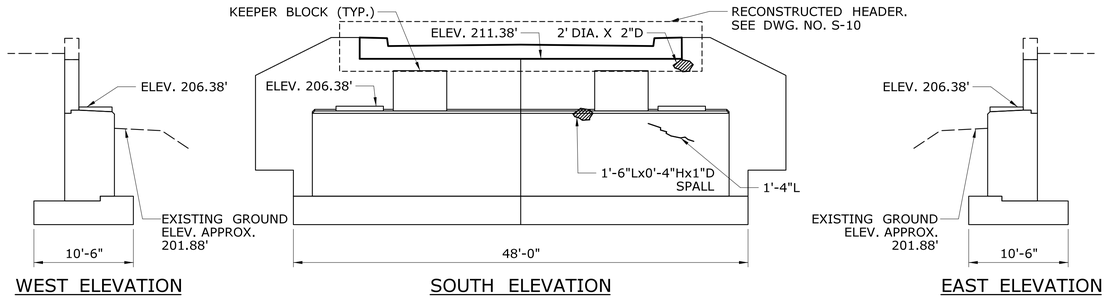

NORTH ABUTMENT ELEVATION

SCALE: 1/8" = 1'-0"

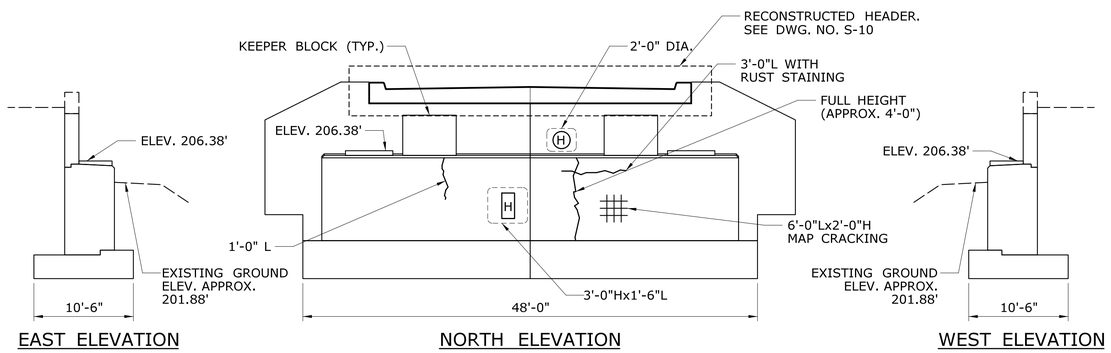

SOUTH ABUTMENT ELEVATION

SCALE: 1/8" = 1'-0"

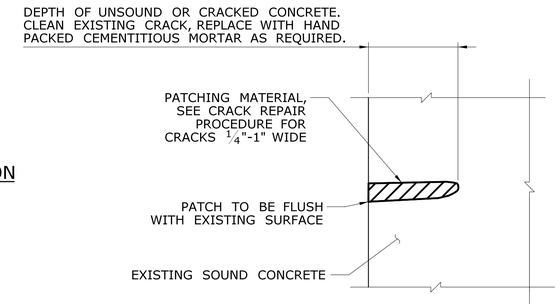

REPAIR PROCEDURE FOR CRACKS 1/4" - 1" WIDE

N.T.S.

CRACK REPAIR PROCEDURE FOR CRACKS 1/4" - 1" WIDE

1. SURFACE PREPARATION:
   - A. REMOVE ALL LOOSE, DETERIORATED CONCRETE, DIRT, OIL, GREASE, AND ALL BOND-INHIBITING MATERIALS FROM SURFACE.
   - B. PROVIDE A MINIMUM REPAIR DEPTH OF 1/8".
   - C. PREPARATION WORK SHALL BE DONE BY SCABBLER, CHISELING, WIRE BRUSHING OR OTHER APPROPRIATE MECHANICAL MEANS.
   - D. ROUGHEN CONTACT SURFACE WITH A MINIMUM PROFILE OF APPROXIMATELY 1/16" FOR BONDING WITH NEW MORTAR.
   - E. SATURATE SURFACE WITH CLEAN WATER.
   - F. SUBSTRATE SHOULD BE SATURATED SURFACE DRY WITH NO STANDING WATER DURING APPLICATION.

2. APPLICATION AND FINISH:
   - A. MIX COMPONENTS OF PATCHING MORTAR AND EPOXY ADHESIVE IN ACCORDANCE TO THE MANUFACTURER'S SPECIFICATIONS.
   - B. APPLY EPOXY ADHESIVE ONTO THE CONCRETE WITH A BRUSH OR BROOM.
   - C. APPLY THE PATCHING MORTAR WHILE THE EPOXY ADHESIVE IS STILL TACKY. IF THE COATING BECOMES GLOSSY AND LOSES TACKINESS, REMOVE ANY SURFACE CONTAMINANTS AND RECOAT WITH ADDITIONAL ADHESIVE EPOXY AND PROCEED WITH PATCHING WORK.
   - D. SCRUB REPAIR MORTAR INTO THE SUBSTRATE, FILLING ALL PORES AND VOIDS. FORCE MATERIAL AGAINST EDGE OF REPAIR, WORKING TOWARDS THE CENTER.
   - E. MATERIAL MAY BE APPLIED IN MULTIPLE LIFTS. EACH LIFT THICKNESS SHALL NOT BE LESS THAN 1/8" NOR GREATER THAN 3" THICK.
   - F. WHERE MULTIPLE LIFTS ARE REQUIRED, SCORE TOP SURFACE OF EACH LIFT TO PRODUCE A ROUGHENED SURFACE FOR NEXT LIFT. ALLOW PRECEDING LIFT TO REACH FINAL SET, 30 MINUTES MINIMUM, BEFORE APPLYING FRESH MATERIAL.
   - G. SATURATE SURFACE OF THE LIFT WITH CLEAN WATER.
   - H. SCRUB FRESH MORTAR INTO PRECEDING LIFT.
   - I. AFTER FILLING REPAIR, CONSOLIDATE, THEN SCREED.
   - J. ALLOW MORTAR TO SET TO DESIRED STIFFNESS, THEN FINISH WITH WOOD OR SPONGE FLOAT FOR A SMOOTH SURFACE.

3. CURING:
   - A. CURING SHALL COMMENCE IMMEDIATELY AFTER FINISHING.
   - B. IF NECESSARY, PROTECT NEWLY APPLIED MATERIAL FROM DIRECT SUNLIGHT, WIND, RAIN OR FROST.
   - C. MOIST CURE WITH FINE MIST OF WATER OR WITH WET BURLAP AND POLYETHYLENE.

4. CRACK REPAIR INCLUDING THE COST OF CEMENTITIOUS MORTAR SHALL BE PAID FOR UNDER ITEM NO. 0601954A "EPOXY INJECTION CRACK REPAIR". SEE SPECIAL PROVISIONS.

5. FOR CRACKS OR GAPS IN CONCRETE SURFACE GREATER THAN 1", USE PATCH REPAIR DETAIL, AND PAY FOR AS ITEM NO. 0601070A "CLASS "S" CONCRETE"

CONCRETE DETERIORATION LEGEND:

- CRACK (HAIRLINE UNLESS WIDTH NOTED)
- MAP CRACKS (HAIRLINE UNLESS WIDTH NOTED)
- H — HOLLOW AREA
- SPALL
- SPALL OR ABRASION WITH EXPOSED REBAR

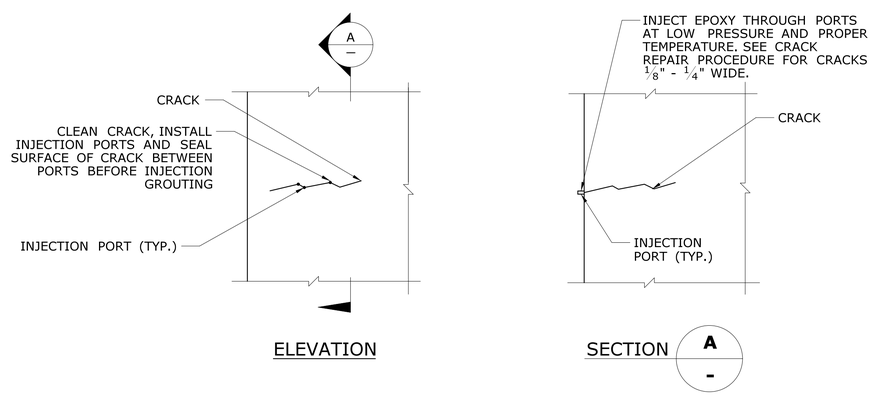

REPAIR PROCEDURE FOR CRACKS 1/8" - 1/4" WIDE

N.T.S.

CRACK REPAIR PROCEDURE FOR CRACKS 1/8" - 1/4" WIDE

1. SURFACE PREPARATION:
   - A. REMOVE DUST, LAITANCE, GREASE, IMPREGNATIONS, FOREIGN PARTICLES AND DISINTEGRATED MATERIALS. SURFACE MUST BE CLEAN AND SOUND WITH A ROUGHENED TEXTURE. IDEALLY DRY, SURFACE MAY BE DAMP BUT SHALL BE FREE OF STANDING WATER.

2. APPLICATION AND FINISH:
   - A. SET GROUT PRESSURE INJECTION PORTS INTO PLACE.
   - B. MIX EPOXY ADHESIVE PER MANUFACTURER'S SPECIFICATION.
   - C. SEAL CRACKS AND PORTS BY APPLYING MIXED EPOXY ADHESIVE MATERIAL OVER THE CRACKS TO BE PRESSURE INJECTED WITH THE HIGH-STRENGTH EPOXY GROUT.
   - D. MIX EPOXY GROUT PER MANUFACTURER'S SPECIFICATION.
   - E. WHEN THE EPOXY ADHESIVE HAS CURED, INJECT THE EPOXY GROUT WITH STEADY PRESSURE.
   - F. ALLOW THE INJECTED EPOXY GROUT TO SET THEN CUT THE PRESSURE INJECTION PORTS FLUSH WITH THE EPOXY ADHESIVE.

3. CRACK REPAIRS SHALL BE PAID UNDER THE ITEM "EPOXY INJECTION CRACK REPAIR". SEE SPECIAL PROVISIONS.

4. ANY CRACKS THAT MEASURE LESS THAN 1/8" AT THEIR WIDEST POINT SHALL NOT BE REPAIRED UNLESS DIRECTED BY THE ENGINEER.

NOTES:

1. ONLY SPALLS, CRACKS, HOLLOW AREAS AND SCALED CONCRETE VISIBLE ABOVE THE ORDINARY HIGH WATER LINE THROUGHOUT THE CONSTRUCTION DURATION ARE TO BE REPAIRED. THE ORDINARY HIGH WATER LINE SHOWN IN PLANS IS BASED UPON DISTRICT 4 SURVEY DATA.
2. DIMENSIONS OF SHOWN DETERIORATION ARE TAKEN FROM PREVIOUS INSPECTION REPORTS (COMPLETED ON 4/24/17) AND FIELD OBSERVATIONS (MADE ON 10/31/17), AND DO NOT INCLUDE ADDITIONAL REMOVAL FOR REPAIRS.
3. FOR ADDITIONAL SUBSTRUCTURE CONCRETE DETERIORATION REPAIR DETAILS SEE DWG. NO. S-07.

REV.	DATE	REVISION DESCRIPTION	SHEET NO.
-	-	-	-
-	-	-	-
-	-	-	-
-	-	-	-
-	-	-	-
-	-	-	-

THE INFORMATION, INCLUDING ESTIMATED QUANTITIES OF WORK, SHOWN ON THESE SHEETS IS BASED ON LIMITED INVESTIGATIONS BY THE STATE AND IS IN NO WAY WARRANTED TO INDICATE THE CONDITIONS OF ACTUAL QUANTITIES OF WORK WHICH WILL BE REQUIRED.

Plotted Date: 8/28/2018

DESIGNER/DRAFTER: SS
CHECKED BY: BNK
SCALE AS NOTED

STATE OF CONNECTICUT
DEPARTMENT OF TRANSPORTATION

Filename: ...\SB_MSH_BR01343_018_134_FD_Abutments.dgn

SIGNATURE/BLOCK:
Hardesty & Hanover, LLC
59 Elm Street
New Haven, CT 06510

PROJECT TITLE:
REHABILITATION OF BRIDGE NO. 01343 ROUTE 133 OVER HOUSATONIC RIVER

TOWN: BROOKFIELD/BRIDGEWATER
PROJECT NO. 18-134
DRAWING TITLE: SUBSTRUCTURE REPAIR DETAILS - 1
DRAWING NO. S-05
SHEET NO. 05.05

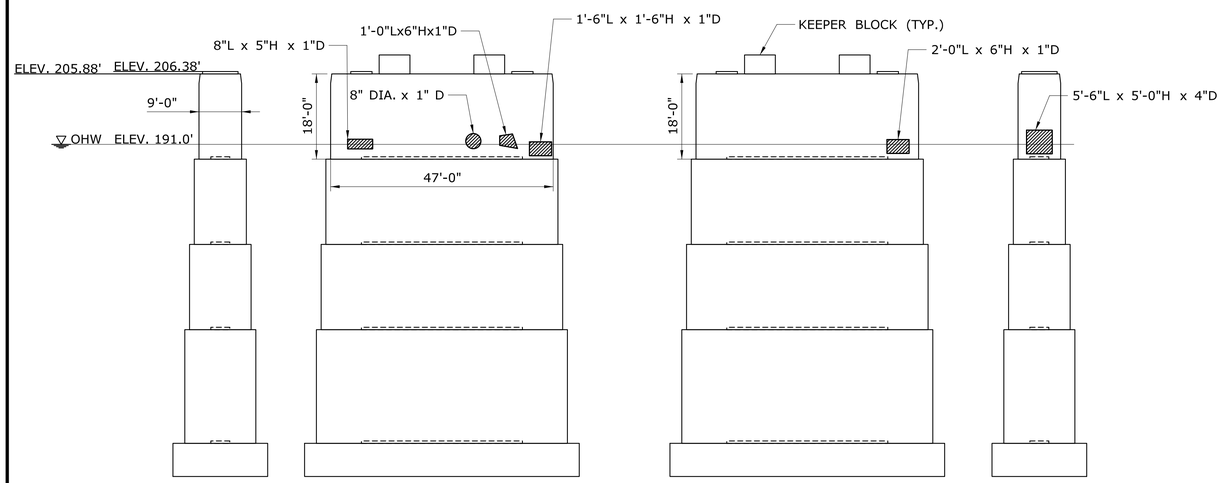

PIER 1

SCALE: 1/16" = 1'-0"

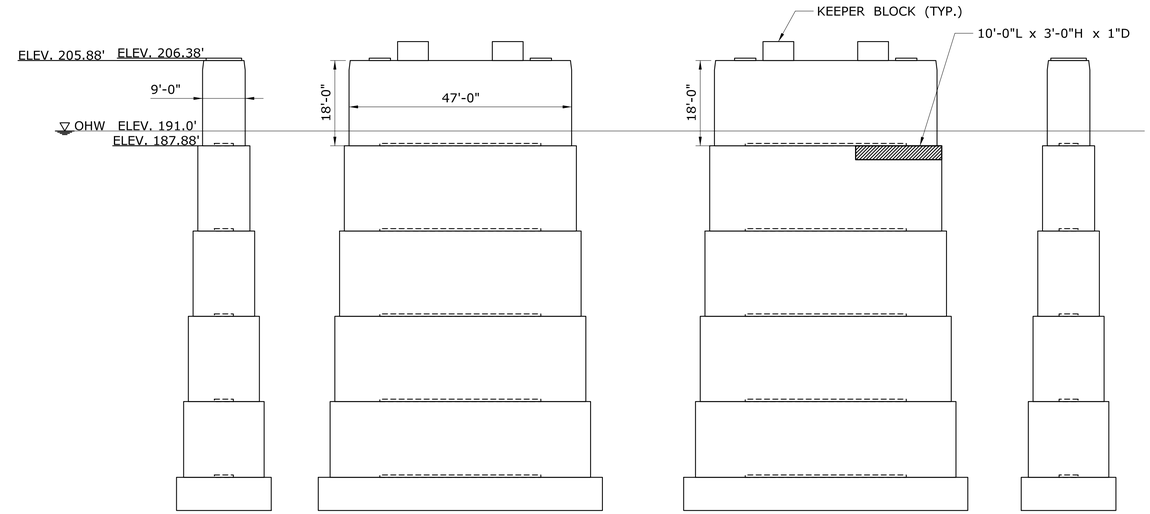

PIER 3

SCALE: 1/16" = 1'-0"

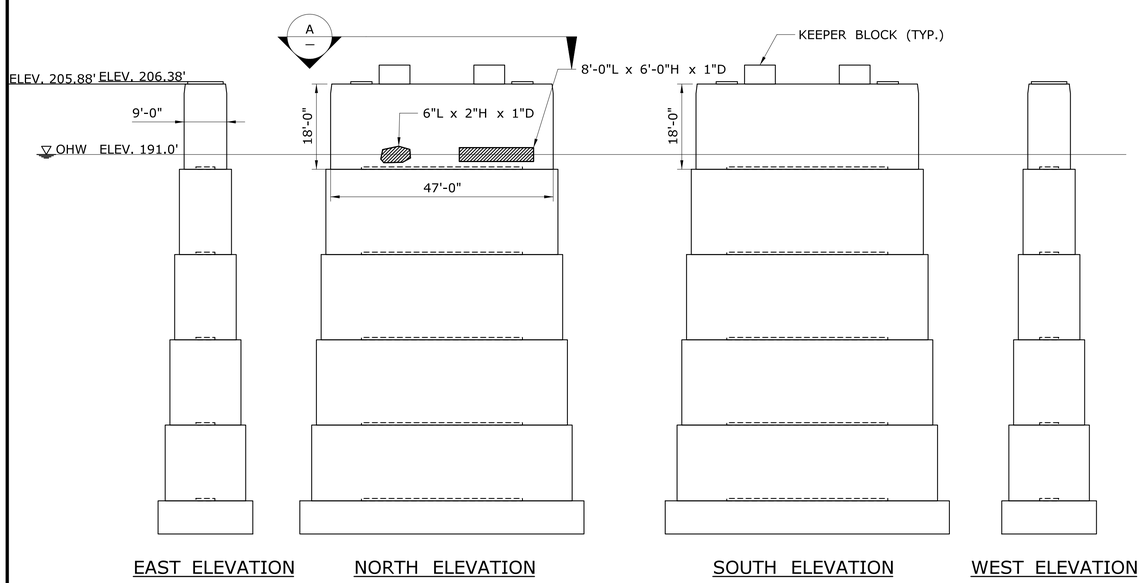

PIER 2

SCALE: 1/16" = 1'-0"

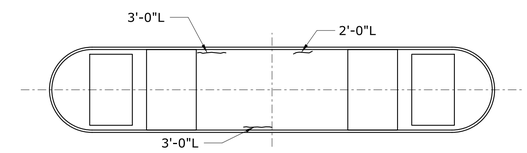

TOP OF PIER 2 (A)

SCALE: 1/8" = 1'-0"

CONCRETE DETERIORATION LEGEND:

- CRACK (HAIRLINE UNLESS WIDTH NOTED)
- MAP CRACKS (HAIRLINE UNLESS WIDTH NOTED)
- H — HOLLOW AREA
- SPALL
- SPALL OR ABRASION WITH EXPOSED REBAR

NOTES:

1. ONLY SPALLS AND CRACKS VISIBLE ABOVE THE ORDNIARY HIGH WATER LINE THROUGHOUT THE CONSTRUCTION DURATION ARE TO BE REPAIRED. THE ORDINARY HIGH WATER LINE SHOWN IN PLANS IS BASED ON DISTRICT 4 SURVEY DATA.
2. DIMENSIONS OF SHOWN DETERIORATION ARE TAKEN FROM PREVIOUS INSPECTION REPORTS (COMPLETED ON 04/24/17) AND FIELD OBSERVATIONS, (MADE ON 10/31/17) AND DO NOT INCLUDE ADDITIONAL REMOVAL FOR REPAIRS.
3. FOR ADDITIONAL SUBSTRUCTURE CONCRETE DETERIORATION REPAIR DETAILS SEE DWG. NO. S-05 AND S-07.

REV.	DATE	REVISION DESCRIPTION	SHEET NO.
-	-	-	-
-	-	-	-
-	-	-	-
-	-	-	-
-	-	-	-
-	-	-	-

THE INFORMATION, INCLUDING ESTIMATED QUANTITIES OF WORK, SHOWN ON THESE SHEETS IS BASED ON LIMITED INVESTIGATIONS BY THE STATE AND IS IN NO WAY WARRANTED TO INDICATE THE CONDITIONS OF ACTUAL QUANTITIES OF WORK WHICH WILL BE REQUIRED.

Plotted Date: 8/28/2018

DESIGNER/DRAFTER: SS

CHECKED BY: BNK

SCALE AS NOTED

STATE OF CONNECTICUT
DEPARTMENT OF TRANSPORTATION

Filename: ...\SB_MSH_BR01343_018_134_FD_Substructure_2.dgn

SIGNATURE/BLOCK:

Hardesty & Hanover, LLC
59 Elm Street
New Haven, CT 06510

PROJECT TITLE:

REHABILITATION OF BRIDGE NO. 01343 ROUTE 133 OVER HOUSATONIC RIVER

TOWN: **BROOKFIELD/BRIDGEWATER**

PROJECT NO. **18-134**

DRAWING TITLE: **SUBSTRUCTURE REPAIR DETAILS - 2**

DRAWING NO. **S-06**

SHEET NO. **05.06**

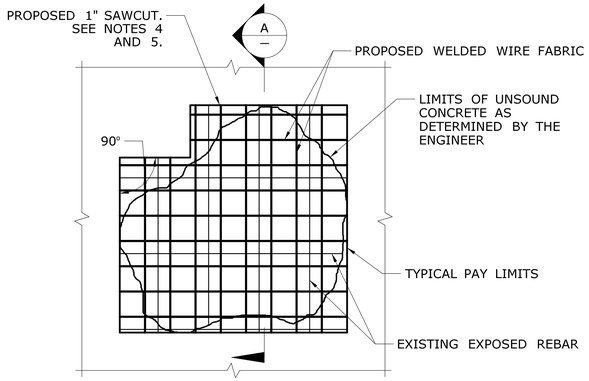

ELEVATION

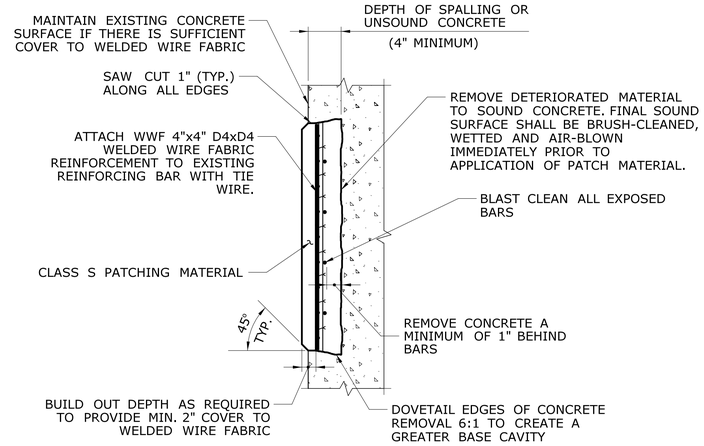

SECTION A -

SUBSTRUCTURE CONCRETE PATCH

SCALE: 1½" = 1'-0"

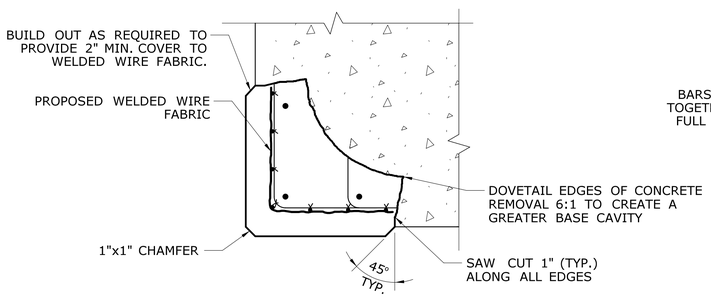

CORNER PATCH DETAIL

SCALE: 1½" = 1'-0"

NOTE

TYPICAL DETAIL APPLICABLE FOR EDGES OF PIERS

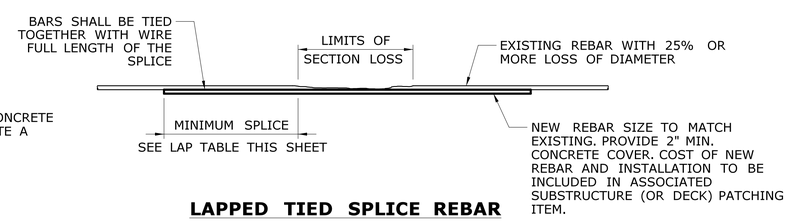

LAPPED TIED SPLICE REBAR

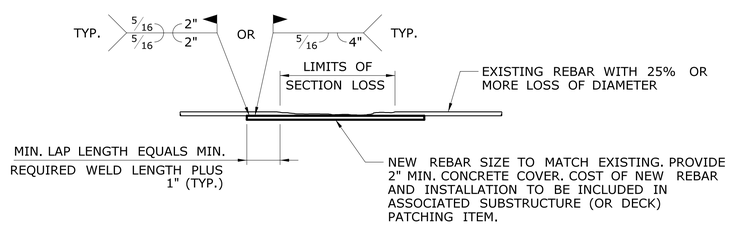

LAPPED WELDED SPLICE DETAIL

REBAR LAP TABLE	
BAR SIZE	MINIMUM LAP LENGTH (IN)
#4	24"
#5	36"

**THE ENGINEER SHALL BE NOTIFIED OF ANY BARS GREATER THAN #5 THAT REQUIRE REPAIR. THESE BARS SHALL BE SPLICED AT THE DIRECTION OF THE ENGINEER.

REINFORCEMENT SPLICE DETAILS

N.T.S.

NOTE

TYPICAL DETAIL APPLICABLE FOR SPALL REPAIRS IF EXPOSED/DETERIORATED REBAR IS FOUND

SUBSTRUCTURE CONCRETE PATCH REPAIR PROCEDURE

A. THE SUBSTRUCTURE CONCRETE PATCH DETAIL APPLIES TO DETERIORATED AREAS OF REINFORCED CONCRETE WHERE REINFORCING BARS ARE EXPOSED.

B. REMOVE DETERIORATED MATERIAL TO SOUND CONCRETE LEAVING NO OFFSET OR ABRUPT CHANGES IN CONTOUR. REMOVE CONCRETE A MINIMUM OF 1" BEYOND THE EXPOSED REINFORCING.

C. CLEAN EXISTING REINFORCING STEEL AND CONCRETE (NEWLY EXPOSED) PER THE REQUIREMENTS OF THE SPECIAL PROVISION. MISSING OR DETERIORATED REINFORCING STEEL SHALL BE REPLACED AND SPLICED AS SHOWN IN DETAIL OR AS DIRECTED BY THE ENGINEER. COST OF REINFORCING STEEL SPLICING IS INCIDENTAL TO THE ITEM "CLASS S CONCRETE".

D. INSTALL WELDED WIRE FABRIC. WELDED WIRE FABRIC COST INCIDENTAL TO THE ITEM "CLASS S CONCRETE".

E. FORM AND PATCH SURFACE.

F. ALL NEW EXPOSED CONCRETE SURFACES WITHIN AREA TO BE REPAIRED SHALL BE RUBBED TO PRODUCE A SMOOTH FINISH.

SUBSTRUCTURE REPAIR NOTES

1. THE CONTRACTOR SHALL REPAIR THE SUBSTRUCTURE DEFICIENCIES IDENTIFIED ON DWG. NO. S-05 AND S-06. REPAIR DETAILS APPLY TO SPALLED, SCALED, AND HOLLOW AREAS IN ABUTMENTS AND PIERS WHERE REQUIRED AND NOTED ON DRAWINGS AND AS DIRECTED BY THE ENGINEER.
2. ESTABLISH LIMITS OF REPAIRS AS SHOWN AND AT THE DIRECTION OF THE ENGINEER. THE EXTENT AND LOCATION OF ALL CONCRETE SUBSTRUCTURE REPAIRS ARE TO BE FIELD VERIFIED AND APPROVED BY THE ENGINEER. CONTRACTOR SHALL PROVIDE THE ENGINEER WITH ACCESS.
3. SUBSTRUCTURE CONCRETE PATCH REPAIRS SHALL BE PAID FOR UNDER THE ITEM "CLASS 'S' CONCRETE".
4. THE LIMITS OF THE REPAIRS SHALL BE SAWCUT ALONG NEAT LINES WHERE PRACTICAL TO A DEPTH OF 1" TO PRODUCE A CLEAN EDGE. SEE SPECIAL PROVISIONS.
5. NEW CONCRETE PATCHES SHALL MATCH SHAPE OF EXISTING CONCRETE SURFACES. REPAIR CONFIGURATIONS SHOULD BE KEPT AS SIMPLE AS POSSIBLE, PREFERABLY WITH SQUARE CORNERS. COLOR OF NEW PATCH CONCRETE SHALL MATCH COLOR OF THE ADJACENT SURFACES AS CLOSELY AS POSSIBLE.
6. EXPOSED REINFORCING BARS SHALL BE BLAST CLEANED AND COATED WITH A ZINC RICH PRIMER BEFORE APPLYING THE PATCHING MATERIAL.
7. THE SURFACE OF EXISTING OR PREVIOUSLY CAST CONCRETE SHALL BE BLAST CLEANED, ROUGHENED AND WETTED WITH CLEAN WATER BEFORE NEW CONCRETE IS PLACED PER THE SPECIAL PROVISIONS.
8. EXISTING CRACKS IDENTIFIED BY THE ENGINEER SHALL BE SEALED IN ACCORDANCE WITH THE SPECIAL PROVISIONS AND THE CRACK REPAIR DETAILS SHOWN ON SHEET S-05.
9. COVER OVER EXISTING REINFORCEMENT SHALL BE A MINIMUM OF 2". FACE OF PATCHED AREA MAY BE BUILT OUT TO MEET THIS REQUIREMENT, IF NECESSARY.
10. THE REMOVAL OF DETERIORATED CONCRETE SHALL PROCEED AS DIRECTED BY THE ENGINEER. IF THE REMOVAL OF DETERIORATED CONCRETE BECOMES EXCESSIVE, THE REMOVAL WORK SHALL BE STOPPED AT THE LOCATION AND THE ENGINEER NOTIFIED IMMEDIATELY. COST OF REMOVAL OF DETERIORATED CONCRETE AND SURFACE PREPARATION OF THE REPAIR AREA SHALL BE INCLUDED IN ITEM "CLASS 'S' CONCRETE".
11. THE CONTRACTOR SHALL NOT REMOVE CONCRETE EXCEPT IN THE PRESENCE OF THE ENGINEER OR HIS APPOINTED REPRESENTATIVE. IF THE AREA REMOVED EXCEEDS 20 SQUARE FEET OR IF THE REMOVAL DEPTH EXTENDS MORE THAN 1-½" BEHIND THE MAIN REINFORCING BARS, THE CONTRACTOR SHALL CEASE REMOVAL OPERATIONS AND NOTIFY THE ENGINEER IMMEDIATELY. THE ENGINEER SHALL DETERMINE IF THE REMOVAL OPERATIONS REDUCE THE STRUCTURAL CAPACITY OF THE ELEMENT.
12. SHALLOW CONCRETE DETERIORATION REMOVED TO SOUND CONCRETE AND NOT EXPOSING EXISTING REINFORCING STEEL SHALL NOT BE PATCHED AND SHALL BE INCIDENTAL UNDER ITEM "CLASS 'S' CONCRETE".
13. THE CONTRACTOR SHALL PROVIDE INSPECTION ACCESS TO THE RESIDENT ENGINEER DURING THE PERFORMANCE OF THIS WORK AT NO ADDITIONAL COST TO THE STATE.

SPLICE NOTES

1. WELDED SPLICE DETAIL TO BE USED ONLY IF IT IS VERIFIED THAT EXISTING STEEL IS WELDABLE BASED ON ITS CHEMICAL COMPOSITION.
2. WELDING SHALL BE DONE IN ACCORDANCE WITH AWS D1.4 STRUCTURAL WELDING CODE - REINFORCING STEEL.
3. MECHANICAL SPLICERS ARE AN ACCEPTABLE ALTERNATE IF APPROVED BY THE ENGINEER. MECHANICAL SPLICERS MUST MEET MINIMUM COVER REQUIREMENTS.

REV.	DATE	REVISION DESCRIPTION	SHEET NO.
-	-	-	-
-	-	-	-
-	-	-	-
-	-	-	-
-	-	-	-
-	-	-	-

THE INFORMATION, INCLUDING ESTIMATED QUANTITIES OF WORK, SHOWN ON THESE SHEETS IS BASED ON LIMITED INVESTIGATIONS BY THE STATE AND IS IN NO WAY WARRANTED TO INDICATE THE CONDITIONS OF ACTUAL QUANTITIES OF WORK WHICH WILL BE REQUIRED.

Plotted Date: 8/28/2018

DESIGNER/DRAFTER: SS
CHECKED BY: BNK
SCALE AS NOTED

STATE OF CONNECTICUT
DEPARTMENT OF TRANSPORTATION

Filename: ...\SB_MSH_BR01343_018_134_FD_Substructure_3.dgn

SIGNATURE/BLOCK:

Hardesty & Hanover, LLC
59 Elm Street
New Haven, CT 06510

PROJECT TITLE:
REHABILITATION OF BRIDGE NO. 01343 ROUTE 133 OVER HOUSATONIC RIVER

TOWN: BROOKFIELD/BRIDGEWATER
PROJECT NO. 18-134
DRAWING TITLE: SUBSTRUCTURE REPAIR DETAILS - 3
DRAWING NO. S-07
SHEET NO. 05.07

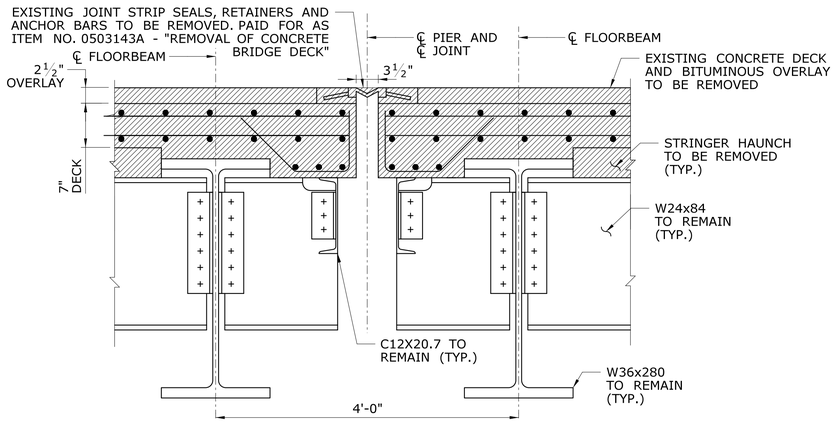

EXISTING DECK JOINT SECTION AT PIERS

SCALE: 1" = 1'-0"

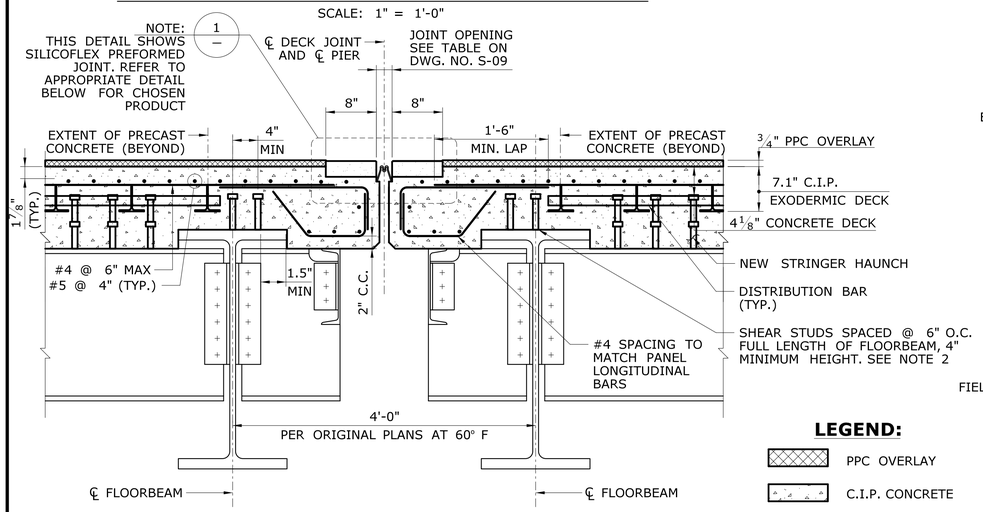

PROPOSED DECK JOINT SECTION AT PIERS

SCALE: 1" = 1'-0"

LEGEND:

- PPC OVERLAY
- C.I.P. CONCRETE

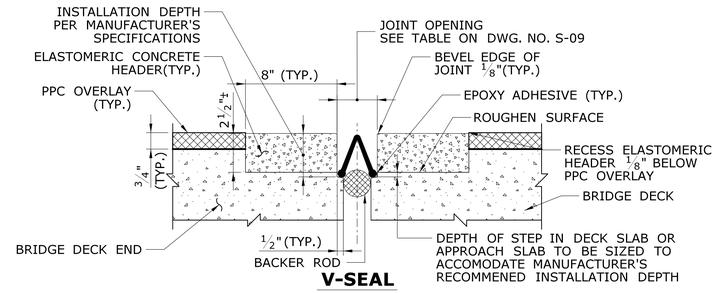

V-SEAL

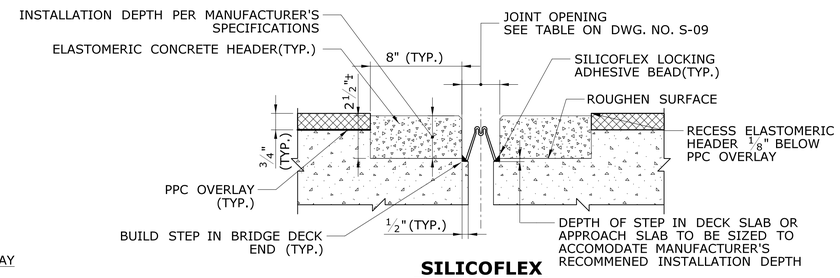

SILICOFLEX

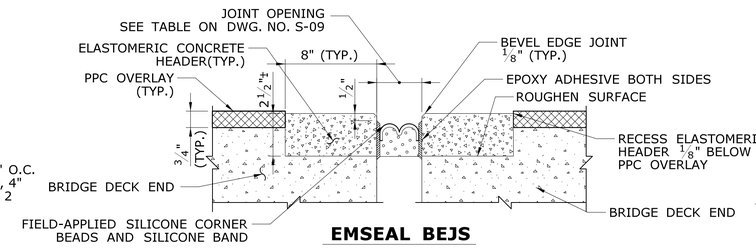

EMSEAL BEJS

PREFORMED JOINT SEAL DETAIL

N.T.S.

1 / -

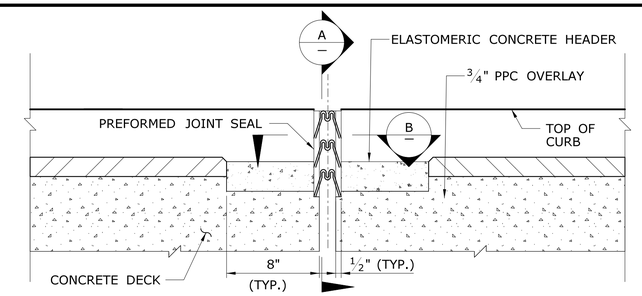

ELEVATION - JOINT TREATMENT IN CURB

N.T.S.

NOTE: SILICOFLEX SHOWN

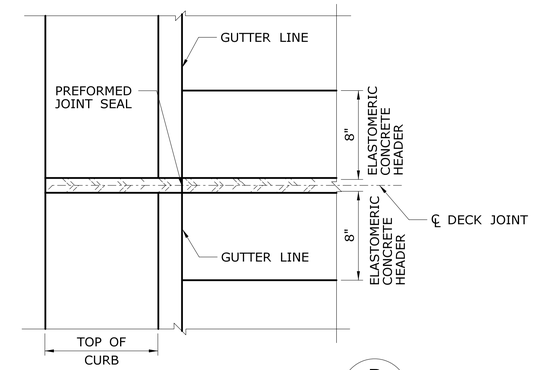

JOINT TREATMENT AT CURB - PLAN

B / -

N.T.S.

NOTE: SILICOFLEX SHOWN

NOTES:

1. CAST-IN-PLACE CONCRETE TO BE HIGH EARLY-STRENGTH CONCRETE, PAID FOR AS ITEM NO. 0601999A - 'EXODERMIC DECK'. SEE SPECIAL PROVISIONS.
2. IT IS REQUIRED THAT SHEAR STUDS EXTEND A MINIMUM OF 2" ABOVE BOTTOM OF WT4x5 MAIN BEARING BARS, AND RECOMMENDED THAT 1" OF CLEARANCE BE LEFT BETWEEN TOP OF SHEAR STUDS AND BOTTOM OF DECK REINFORCEMENT.

ELASTOMERIC CONCRETE HEADER & PREFORMED JOINT SEAL NOTES:

1. BLOCK OUT RECESS FOR THE ELASTOMERIC CONCRETE HEADER PRIOR TO DECK CLOSURE POURS. ELASTOMERIC CONCRETE HEADER SHALL BE INSTALLED AFTER THE DECK CLOSURE POUR PLACEMENT. THE PREFORMED JOINT SEAL SHALL BE INSTALLED FULL WIDTH DURING 55-HOUR CLOSURE FOR CONSTRUCTION STAGE V.
2. SEE DWG. NO. S-09 FOR JOINT OPENING SIZE.
3. THE ELASTOMERIC CONCRETE HEADER SHALL BE BEVELED ⅛" BELOW THE PPC OVERLAY.
4. GAP WIDTHS DETERMINED AS FOLLOWING:

   -SILICOFLEX: ASSUMED THE USE OF SF400

   -V-SEAL: ASSUMED THE USE OF V-400

   -EMSEAL: ASSUMED THE USE OF 3" BEJS (DEFORMATION +/- 50% NOM. SIZE)
5. THE CONTRACTOR SHALL DETERMINE THE ACTUAL GAP WIDTH AND PROPOSE TYPE OF JOINT SEAL TO BE USED.
6. JOINT OPENINGS FOR NEW DECK ENDS ASSUME A ½" STEP IN DECK END CONCRETE PER SILICOFLEX AND V-SEAL MANUFACTURER RECOMMENDATIONS. DECK END TO DECK END JOINT OPENING IS 1" NARROWER THAN TABLE VALUE. ALL OTHER JOINT OPENINGS DO NOT INCLUDE A STEP.
7. JOINT SEAL AND INSTALLATION PAID FOR AS ITEM NO. 0520041A - "PREFORMED JOINT SEAL". SEE SPECIAL PROVISIONS FOR ADDITIONAL REQUIREMENTS.
8. PREFORMED JOINT SEAL SHALL BE INSTALLED WHEN THE AMBIENT TEPERATURE IS BETWEEN 50° F AND 80° F.

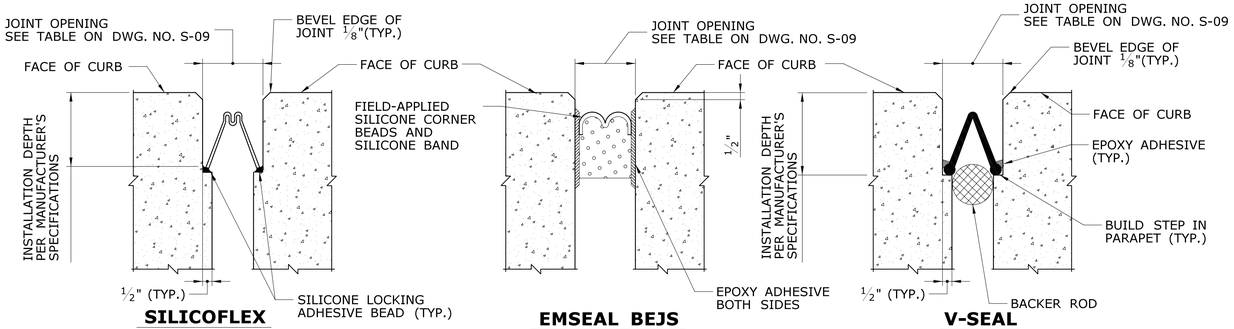

PREFORMED JOINT SEAL SECTIONS

N.T.S.

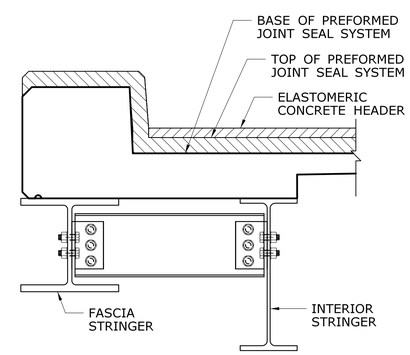

SECTION A / -

SCALE: 1" = 1'-0"

REV.	DATE	REVISION DESCRIPTION	SHEET NO.
-	-	-	-
-	-	-	-
-	-	-	-
-	-	-	-
-	-	-	-
-	-	-	-

THE INFORMATION, INCLUDING ESTIMATED QUANTITIES OF WORK, SHOWN ON THESE SHEETS IS BASED ON LIMITED INVESTIGATIONS BY THE STATE AND IS IN NO WAY WARRANTED TO INDICATE THE CONDITIONS OF ACTUAL QUANTITIES OF WORK WHICH WILL BE REQUIRED.

Plotted Date: 8/28/2018

DESIGNER/DRAFTER: SS

CHECKED BY: BNK

SCALE AS NOTED

STATE OF CONNECTICUT
DEPARTMENT OF TRANSPORTATION

Filename: ...\SB_MSH_BR01343_018_134_FD_Joint_Details_1.dgn

SIGNATURE/BLOCK:

Hardesty & Hanover, LLC
59 Elm Street
New Haven, CT 06510

PROJECT TITLE:

REHABILITATION OF BRIDGE NO. 01343 ROUTE 133 OVER HOUSATONIC RIVER

TOWN: **BROOKFIELD/BRIDGEWATER**

DRAWING TITLE: **DECK JOINT DETAILS - AT PIER LOCATIONS**

PROJECT NO. **18-134**

DRAWING NO. **S-08**

SHEET NO. **05.08**

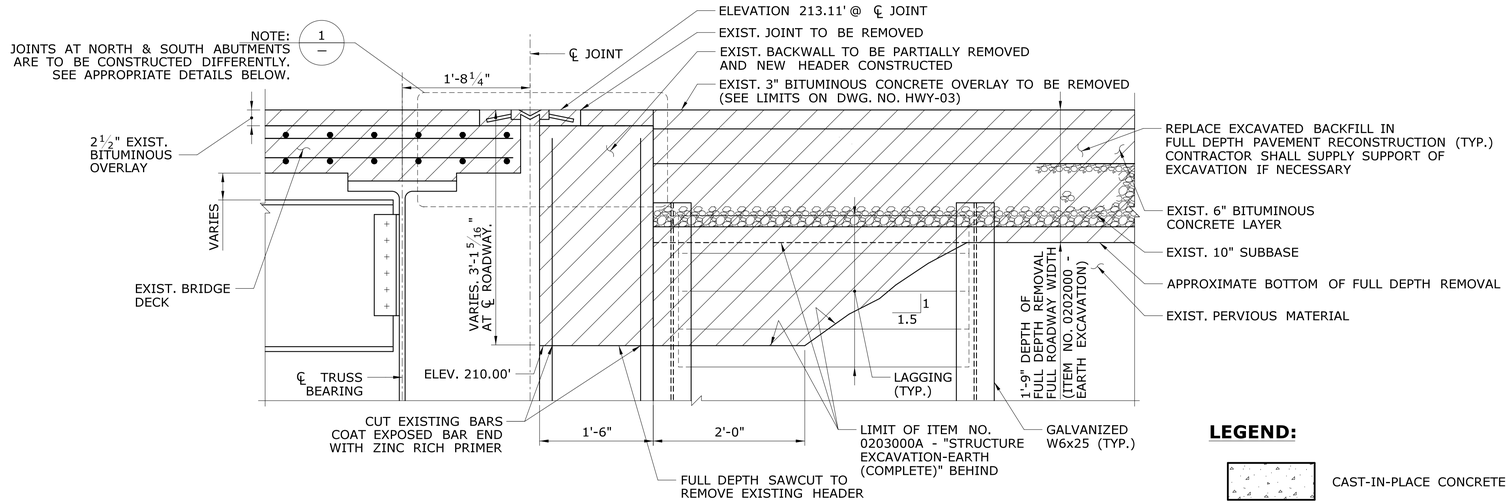

EXISTING JOINT REMOVAL AT NORTH & SOUTH ABUTMENTS

SCALE: 1" = 1'-0"

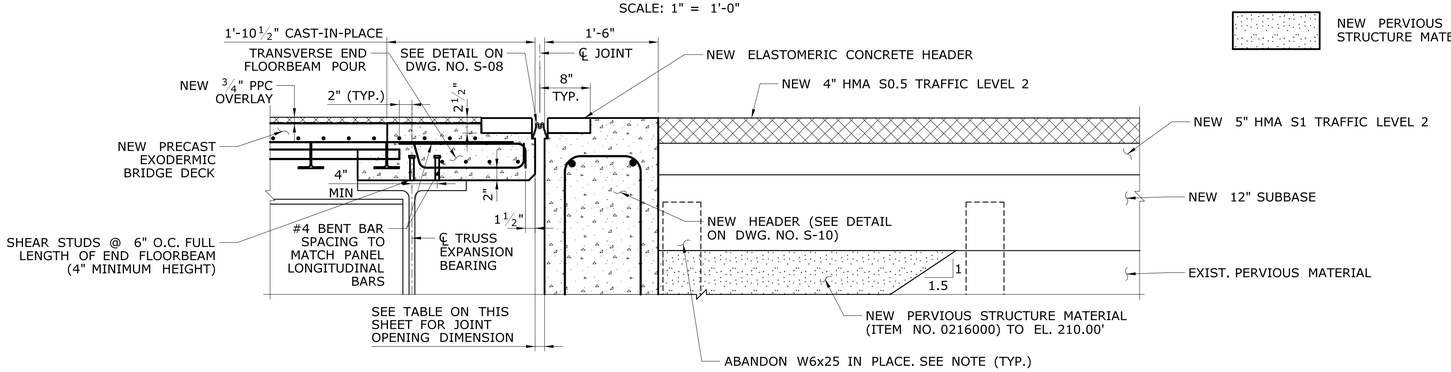

SILICONE SEAL EXPANSION JOINT AT SOUTH ABUTMENT

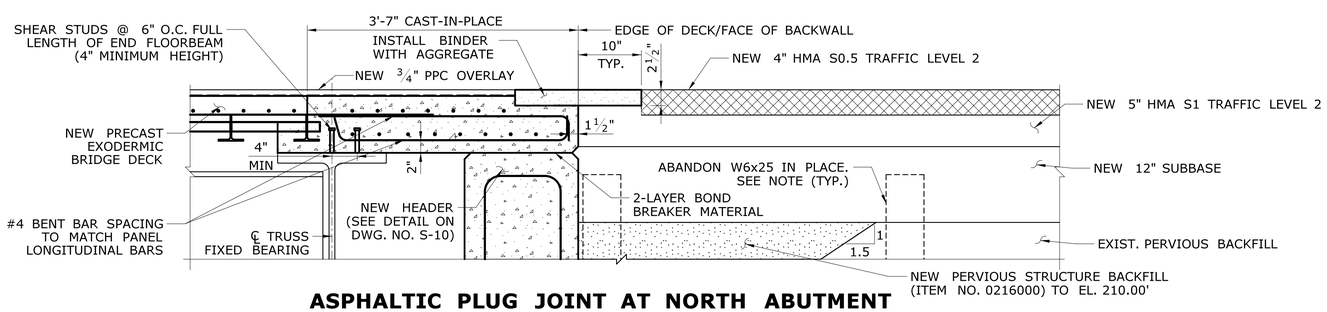

ASPHALTIC PLUG JOINT AT NORTH ABUTMENT

DETAIL 1 / –
1" = 1'-0"

LEGEND:

- CAST-IN-PLACE CONCRETE
- PRECAST CONCRETE
- NEW PERVIOUS STRUCTURE MATERIAL

SUPPORT OF EXCAVATION (SOE) NOTES

1. SOLDIER PILE AND LAGGING WALL SOE IS CONCEPTUAL.
2. SOE TO BE DESIGNED BY CONTRACTOR, INCLUDING DEPTH OF SOE.
3. SOE TO BE PAID FOR AS ITEM NO. 0203000A - "STRUCTURE EXCAVATION - EARTH (COMPLETE)".
4. SOLDIER PILES TO BE CUT BELOW ELEV. 212.0' AND ABANDONED PRIOR TO PLACING PERVIOUS STRUCTURAL BACKFILL.

ASPHALTIC PLUG EXPANSION JOINT SYSTEM NOTES

1. CRACK SEALANT PLACED ALONG VERTICAL FACES OF THE SAW-CUT PAVEMENT AND ON SURFACE AT JOINTS SHALL BE PAID UNDER THE ITEM "ASPHALTIC PLUG EXPANSION JOINT SYSTEM."
2. SAWCUTTING AND REMOVAL OF PAVEMENT FOR JOINT INSTALLATION SHALL BE PAID FOR UNDER THE ITEM "ASPHALTIC PLUG EXPANSION JOINT SYSTEM".
3. REFER TO SPECIAL PROVISIONS ASPHALTIC PLUG JOINT SYSTEM INSTALLATION RESTRICTIONS.
4. SEALING OF PARAPET JOINTS IS PAID FOR UNDER THE ITEM "ASPHALTIC PLUG EXPANSION JOINT SYSTEM."
5. SEE TABLE THIS SHEET FOR JOINT OPENING DIMENSIONS.
6. SEE GENERAL PLAN DWG NO. S-02 FOR ASPHALTIC PLUG JOINT LOCATIONS.

ASPHALTIC PLUG EXPANSION JOINT SYSTEM - SUGGESTED SEQUENCE OF WORK:

STEP 1 REPLACE THE EXISTING DECK WITH NEW EXODERMIC DECK SYSTEM AND RECONSTRUCT ABUTMENT HEADER

STEP 2 FOLLOWING COMPLETION OF CONSTRUCTION STAGE II, INSTALL ASPHALTIC PLUG JOINT IN 1.75" DEEP BLOCK OUT WITH DIMENSIONS SHOWN IN DETAIL 1.

STEP 3 FOLLOWING COMPLETION OF CONSTRUCTION STAGE III, INSTALL ASPHALTIC PLUG JOINT IN 1.75" DEEP BLOCK OUT WITH DIMENSIONS SHOWN IN DETAIL 1. SPLICE ASPHALTIC PLUG JOINT TO JOINT INSTALLED AT COMPLETION OF CONSTRUCTION STAGE II.

STEP 4 PLACE POLYESTER POLYMER CONCRETE OVERLAY.

BACKWALL HEADER RECONSTRUCTION NOTES

1. NEW CONCRETE FOR REPLACED HEADER TO BE PAID FOR AS ITEM NO. 0601107A - "HIGH EARLY STRENGTH CONCRETE".
2. SAWCUTTING OF CONCRETE, SELECTIVE DEMOLITION, AND REMOVAL OF ALL CONCRETE NOTED IN THE CONTRACT PLANS TO BE PAID FOR AS ITEM NO. 0974001 - REMOVAL OF EXISTING MASONRY".
3. NEW CAST IN PLACE CONCRETE DECK FOR JOINT CONSTRUCTION AT ABUTMENTS SHALL BE HIGH EARLY-STRENGTH CONCRETE AND IS TO BE PAID FOR AS ITEM NO. 0601999A - "EXODERMIC DECK".

JOINT OPENING CHART

JOINT TYPE	SILICON EXPANSION JOINT SYSTEM						ASPHALTIC PLUG
LOCATION	SOUTH ABUTMENT, PIER 1-3						NORTH ABUTMENT
TEMPERATURE (° F)	40	50	60	70	80	90	N/A
GAP WIDTH (IN.)	3 5/16	3 3/16	3	2 13/16	2 11/16	2 1/2	1" AT CURB. SEE DETAIL

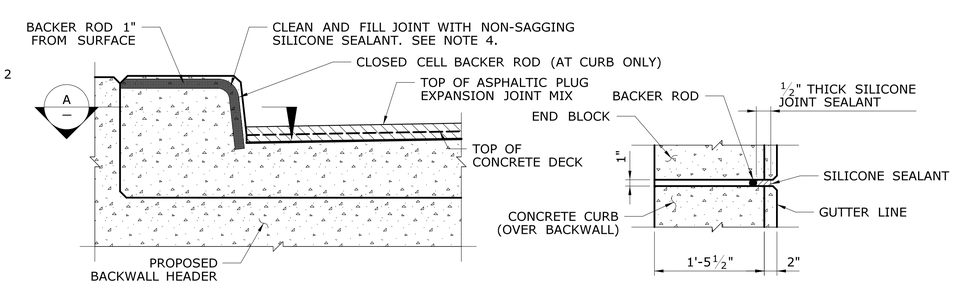

ASPHALTIC PLUG AT CURB

SCALE: 1" = 1'-0"

SECTION A / –
SCALE: N.T.S.

REV.	DATE	REVISION DESCRIPTION	SHEET NO.
-	-	-	-
-	-	-	-
-	-	-	-
-	-	-	-
-	-	-	-
-	-	-	-

THE INFORMATION, INCLUDING ESTIMATED QUANTITIES OF WORK, SHOWN ON THESE SHEETS IS BASED ON LIMITED INVESTIGATIONS BY THE STATE AND IS IN NO WAY WARRANTED TO INDICATE THE CONDITIONS OF ACTUAL QUANTITIES OF WORK WHICH WILL BE REQUIRED.

Plotted Date: 8/28/2018

DESIGNER/DRAFTER: SS
CHECKED BY: BNK
SCALE AS NOTED

STATE OF CONNECTICUT
DEPARTMENT OF TRANSPORTATION

Filename: ...\SB_MSH_BR01343_018_134_FD_Joint_Details_2.dgn

SIGNATURE/BLOCK:
Hardesty & Hanover, LLC
59 Elm Street
New Haven, CT 06510

PROJECT TITLE:
REHABILITATION OF BRIDGE NO. 01343 ROUTE 133 OVER HOUSATONIC RIVER

TOWN: BROOKFIELD/BRIDGEWATER

DRAWING TITLE: DECK JOINT DETAILS - AT ABUTMENT LOCATIONS

PROJECT NO. 18-134
DRAWING NO. S-09
SHEET NO. 05.09

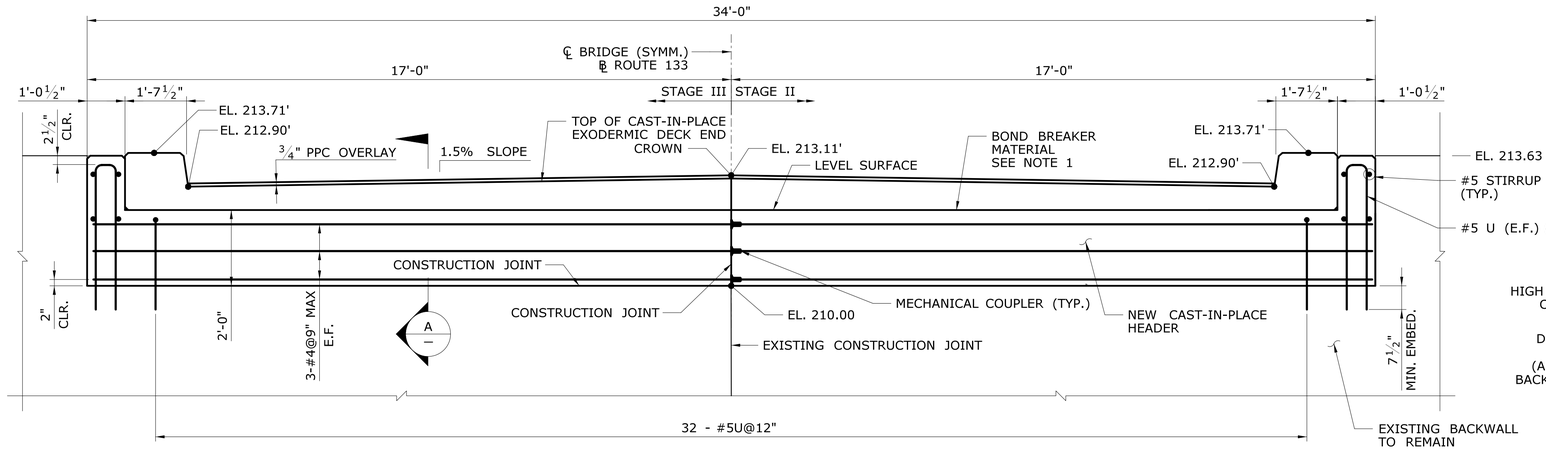

PROPOSED BACKWALL HEADER (NORTH ABUTMENT)

ELEVATION LOOKING NORTH
SCALE: ½" = 1'-0"

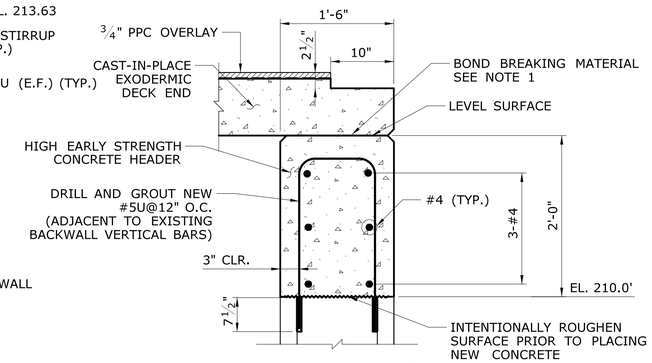

SECTION A
SCALE: 1"=1'-0"

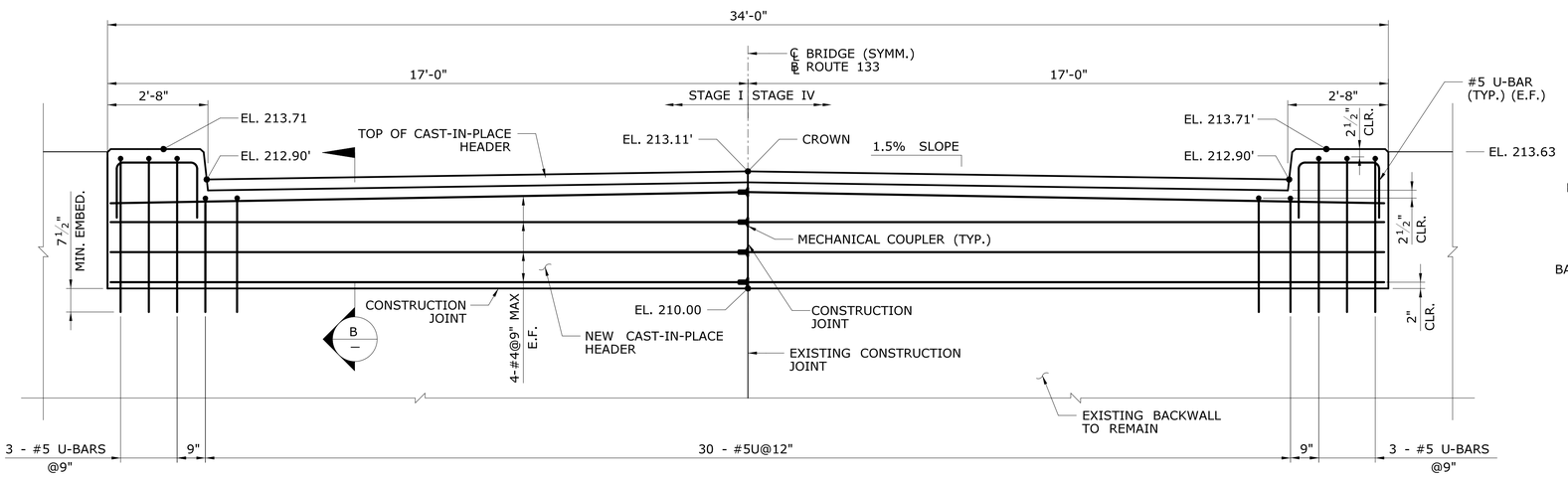

PROPOSED BACKWALL HEADER (SOUTH ABUTMENT)

ELEVATION LOOKING SOUTH
SCALE: ½" = 1'-0"

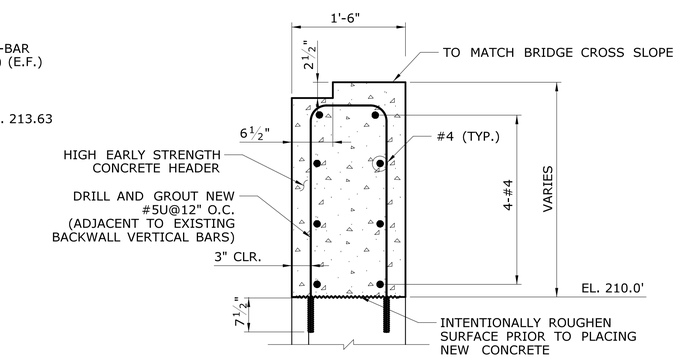

SECTION B
SCALE: 1"=1'-0"

NOTES:

1. 2-LAYER BOND BREAKER MATERIAL CAN BE ANY IMPERMEABLE COATED OR SHEET MEMBRANE OR PREFORMED MATERIAL HAVING A THICKNESS OF NOT LESS THAN 6 MILS NOR MORE THAN ½".
2. REFER TO SECTION A ON DWG. NO. S-09 FOR EXISTING BACKWALL TO NEW BACKWALL JOINT TREATMENT DETAILS.
3. REFER TO ASPHALTIC PLUG AT CURB DETAIL ON DWG. NO. S-09.
4. BACKWALL HEADER CONSTRUCTION TO BE PAID FOR UNDER ITEM NO. 0601107A - "HIGH EARLY STRENGTH CONCRETE".
5. ALL REINFORCEMENT THIS SHEET TO BE PAID FOR AS ITEM NO. 0602006 - "DEFORMED STEEL BARS - EPOXY COATED".
6. MECHANICAL COUPLERS TO BE PAID FOR AS ITEM NO. 0602891 - "DOWEL BAR SPLICER SYSTEM - EPOXY COATED".

REV.	DATE	REVISION DESCRIPTION	SHEET NO.
-	-	-	-
-	-	-	-
-	-	-	-
-	-	-	-
-	-	-	-
-	-	-	-

THE INFORMATION, INCLUDING ESTIMATED QUANTITIES OF WORK, SHOWN ON THESE SHEETS IS BASED ON LIMITED INVESTIGATIONS BY THE STATE AND IS IN NO WAY WARRANTED TO INDICATE THE CONDITIONS OF ACTUAL QUANTITIES OF WORK WHICH WILL BE REQUIRED.

Plotted Date: 8/28/2018

DESIGNER/DRAFTER: SS
CHECKED BY: BNK
SCALE AS NOTED

STATE OF CONNECTICUT
DEPARTMENT OF TRANSPORTATION

Filename: ...\SB_MSH_BR01343_018_134_FD_Joint_Details_3.dgn

SIGNATURE/BLOCK:
Hardesty & Hanover, LLC
59 Elm Street
New Haven, CT 06510

PROJECT TITLE:
REHABILITATION OF BRIDGE NO. 01343 ROUTE 133 OVER HOUSATONIC RIVER

TOWN: BROOKFIELD/BRIDGEWATER
PROJECT NO. 18-134
DRAWING TITLE: DECK JOINT DETAILS - HEADER RECONSTRUCTION
DRAWING NO. S-10
SHEET NO. 05.10

STEEL REPAIR LEGEND

MEMBER NAME — XX / XXX — REPAIR TYPE

BOTTOM CHORD

- BC / 1 — BOTTOM CHORD REPAIR AT TRUSS NODES
- BC / 2 — BOTTOM CHORD REPAIR AT BATTEN PLATES
- BC / 3 — RIVET REPLACEMENT @ END NODES

UPPER CHORD

- UC / 1 — UPPER CHORD END POST STRENGTHENING

FLOORBEAM

- FB / 1 — FLOORBEAM BOTTOM FLANGE REPAIR

STRINGER

- S / 1 — STRINGER WEB REPAIR
- S / 2 — STRINGER BOTTOM FLANGE REPAIR

LATERAL BRACING

- LB / 1 — END PORTAL BRACING IMPACT DAMAGE
- LB / 2 — INTERMEDIATE PORTAL BRACING IMPACT DAMAGE

BEARING

- BRG / 1 — CLEAN/PAINT BEARING

GUSSET PLATE

- GP / 1 — INTERIOR GUSSET PL REPAIR
- GP / 2 — EXTERIOR GUSSET PL REPAIR
- GP / 3 — INTERIOR GUSSET PL STRENGTHENING
- GP / 4 — EXTERIOR GUSSET PL STRENGTHENING

RIVET REPLACEMENT

- RR / XX — RIVET REPLACEMENT; # OF RIVETS

GP-1 INTERIOR GUSSET REPAIR PROCEDURE:

1. REMOVE ALL PAINT AND RUST WITHIN THE OUTLINE OF THE PROPOSED STEEL REPAIR PLATE.
2. BLOCK FLANGE OF EXISTING DIAGONAL CHANNEL TO ALLOW PLACEMENT OF NEW $^3/_4$" LAP PLATE. GRIND TO MINIMUM 1" RADIUS.
3. PAINT THE STEEL BELOW THE PROPOSED PLATES WITH ZINC RICH PRIMER.
4. APPLY STEEL SEAM EPOXY PATCHING AND SURFACING COMPOUND OR EQUIVALENT STEEL SEALER TO FILL STEEL SURFACES WHERE CORROSION LOSSES HAVE OCCURRED.
5. INSTALL THE PROPOSED STEEL REPAIR PLATES ON BOTH SIDES OF THE GUSSET PLATE. BOLT PLATES TOGETHER WITH HIGH STRENGTH BOLTS ON ALL BUT BOTTOM ROW OF FASTENERS. EXTERIOR REPAIR PLATE IS TO BE INSTALLED TIGHT AGAINST END FACE OF EXISTING DIAGONAL CHANNEL, AND IN BEARING AGAINST TOP OF BOTTOM CHORD REINFORCING PLATE. AT LEAST 70% OF THE SURFACES SPECIFIED TO BE IN BEARING CONTACT SHALL HAVE THE CONTACT SURFACES WITHIN 0.005 INCH OF EACH OTHER. NO REMAINING PORTION OF THE SURFACES SPECIFIED TO BE IN BEARING CONTACT SHALL HAVE A SEPARATION EXCEEDING 0.03 INCH. INTERIOR REPAIR PLATE IS TO BE INSTALLED TIGHT AGAINST TOP OF BOTTOM CHORD COVER PLATE.
6. REMOVE RIVETS TO BE REPLACED WITH HIGH STRENGTH BOLTS ONE AT A TIME, REPLACING WITH A HEADED DRIFT PIN. INSTALL THE PROPOSED $^1/_2$" LAP PLATE AND BOLT PLATE ON WITH HIGH STRENGTH BOLTS, REPLACING HEADED DRIFT PINS ONE AT A TIME.
7. PAINT THE STEEL REPAIR PLATES AND SURROUNDING AREA. SEE DWG. NO. S-03 FOR PAINT COLOR.

GP-2 EXTERIOR GUSSET REPAIR PROCEDURE:

1. REMOVE ALL PAINT AND RUST WITHIN THE OUTLINE OF THE PROPOSED STEEL REPAIR PLATE.
2. PAINT THE STEEL BELOW THE PROPOSED PLATE WITH ZINC RICH PRIMER.
3. APPLY STEEL SEAM EPOXY PATCHING AND SURFACING COMPOUND OR EQUIVALENT STEEL SEALER TO FILL STEEL SURFACES WHERE CORROSION LOSSES HAVE OCCURRED.
4. REMOVE EXISTING RIVETS AT DIAPHRAGM SUPPORT ANGLES ONE AT A TIME AND REPLACE WITH HEADED DRIFT PINS. INSTALL THE PROPOSED STEEL REPAIR PLATES ON BOTH SIDES OF THE GUSSET PLATE AND BOLT TOGETHER WITH HIGH STRENGTH BOLTS. AT LEAST 70% OF THE SURFACES SPECIFIED TO BE IN BEARING CONTACT SHALL HAVE THE CONTACT SURFACES WITHIN 0.005 INCH OF EACH OTHER. NO REMAINING PORTION OF THE SURFACES SPECIFIED TO BE IN BEARING CONTACT SHALL HAVE A SEPARATION EXCEEDING 0.03 INCH. REMOVE ONE HEADED DRIFT PIN AT A TIME AND REPLACE WITH HIGH STRENGTH BOLTS.
5. PAINT THE STEEL REPAIR PLATE AND SURROUNDING AREA. SEE DWG. NO. S-03 FOR PAINT COLOR.

GP-3 INTERIOR GUSSET STRENGTHENING PROCEDURE:

1. REMOVE ALL PAINT AND RUST WITHIN THE OUTLINE OF THE PROPOSED STEEL REPAIR PLATE.
2. BLOCK HORIZONTAL FLANGE OF DIAGONAL CHANNEL TO ALLOW FOR INSTALLATION OF NEW $^1/_2$" LAP PLATE.
3. PAINT THE STEEL BELOW THE PROPOSED PLATE WITH ZINC RICH PRIMER.
4. APPLY STEEL SEAM EPOXY PATCHING AND SURFACING COMPOUND OR EQUIVALENT STEEL SEALER TO FILL STEEL SURFACES WHERE CORROSION LOSSES HAVE OCCURRED.
5. REMOVE RIVETS AND EXISTING BOLTS TO BE REPLACED WITH HIGH STRENGTH BOLTS ONE AT A TIME, REPLACING WITH A HEADED DRIFT PIN. INSTALL THE PROPOSED $^1/_2$" LAP PLATE AND BOLT PLATE ON WITH HIGH STRENGTH BOLTS, REPLACING HEADED DRIFT PINS ONE AT A TIME.
6. PAINT THE STEEL REPAIR PLATE AND SURROUNDING AREA. SEE DWG. NO. S-03 FOR PAINT COLOR.

GP-4 EXTERIOR GUSSET STRENGTHENING PROCEDURE:

1. REMOVE ALL PAINT AND RUST WITHIN THE OUTLINE OF THE PROPOSED STEEL REPAIR PLATE.
2. PAINT THE STEEL BELOW THE PROPOSED PLATE WITH ZINC RICH PRIMER.
3. APPLY STEEL SEAM EPOXY PATCHING AND SURFACING COMPOUND OR EQUIVALENT STEEL SEALER TO FILL STEEL SURFACES WHERE CORROSION LOSSES HAVE OCCURRED.
4. REMOVE EXISTING RIVETS AT DIAPHRAGM SUPPORT ANGLES ONE AT A TIME AND REPLACE WITH HEADED DRIFT PINS. INSTALL THE PROPOSED STEEL REPAIR PLATE AND BOLT TOGETHER WITH HIGH STRENGTH BOLTS. AT LEAST 70% OF THE SURFACES SPECIFIED TO BE IN BEARING CONTACT SHALL HAVE THE CONTACT SURFACES WITHIN 0.005 INCH OF EACH OTHER. NO REMAINING PORTION OF THE SURFACES SPECIFIED TO BE IN BEARING CONTACT SHALL HAVE A SEPARATION EXCEEDING 0.03 INCH. REMOVE ONE HEADED DRIFT PIN AT A TIME AND REPLACE WITH HIGH STRENGTH BOLTS.
5. PAINT THE STEEL REPAIR PLATE AND SURROUNDING AREA. SEE DWG. NO. S-03 FOR PAINT COLOR.

STEEL REPAIR QUANTITIES

MEMBER	REPAIR TYPE	ABBR.	DWG. NO.	TO BE COMPLETED*	SPAN 1	SPAN 2	SPAN 3	SPAN 4	TOTAL
BOTTOM CHORD	BOTTOM CHORD REPAIR @ TRUSS NODES	BC-1	S-16	BEFORE CLOSURE	3	5	6	4	18
	BOTTOM CHORD REPAIR @ BATTEN PLATES	BC-2	S-16	BEFORE CLOSURE	45	45	55	40	185
	RIVET REPLACEMENT @ END NODES	BC-3	S-17	BEFORE CLOSURE	2	2	2	1	7
UPPER CHORD	END POST STRENGTHENING	UC-1	S-18	DURING CLOSURE	4	4	4	4	16
FLOORBEAM	BOTTOM FLANGE REPAIR	FB-1	S-18	BEFORE CLOSURE	9	7	0	9	25
STRINGER	WEB REPAIR	S-1	S-18	BEFORE CLOSURE**	1	0	0	0	1
	BOTTOM FLANGE REPAIR	S-2	S-18	BEFORE CLOSURE	5	0	1	0	6
LATERAL BRACING	END PORTAL IMPACT DAMAGE REPAIR	LB-1	S-19	DURING CLOSURE	1	0	0	0	1
	INTERMED. PORTAL IMPACT DAMAGE REPAIR	LB-2	S-19	DURING CLOSURE	1	1	0	2	4
BEARING	CLEAN/PAINT BEARINGS	BRG-1	S-30	AFTER CLOSURE	4	4	4	4	16
GUSSET PLATE	INTERIOR GUSSET PL REPAIR	GP-1	S-17	BEFORE CLOSURE	0	2	0	1	3
	EXTERIOR GUSSET PL REPAIR	GP-2	S-17	BEFORE CLOSURE	0	1	1	0	2
	INTERIOR STRENGTHENING	GP-3	S-17	BEFORE CLOSURE	2	1	2	2	7
	EXTERIOR STRENGTHENING	GP-4	S-17	BEFORE CLOSURE	2	2	2	2	8

*CLOSURE REFERS TO 55-HOUR WEEKEND CLOSURE

**SEE NOTE 2 ON DWG. NO. S-18

NOTES:

1. SEE DWG NO. S-12 TO S-15 FOR STEEL REPAIR LOCATIONS.
2. SEE DWG NO. S-16 TO S-21 FOR STEEL REPAIR DETAILS.
3. SEE DWG NO. S-03 FOR STRUCTURAL STEEL AND BOLTING REQUIREMENTS.
4. CLEANING AND PAINTING OF BEARINGS TO BE PAID FOR UNDER ITEM NO. 0603729A - "LOCALIZED PAINT REMOVAL AND FIELD PAINTING OF EXISTING STEEL".

REV.	DATE	REVISION DESCRIPTION	SHEET NO.
-	-	-	-
-	-	-	-
-	-	-	-
-	-	-	-
-	-	-	-
-	-	-	-

THE INFORMATION, INCLUDING ESTIMATED QUANTITIES OF WORK, SHOWN ON THESE SHEETS IS BASED ON LIMITED INVESTIGATIONS BY THE STATE AND IS IN NO WAY WARRANTED TO INDICATE THE CONDITIONS OF ACTUAL QUANTITIES OF WORK WHICH WILL BE REQUIRED.

Plotted Date: $DATE$

DESIGNER/DRAFTER: SS

CHECKED BY: BNK

SCALE AS NOTED

STATE OF CONNECTICUT
DEPARTMENT OF TRANSPORTATION

Filename: $FILEA$

SIGNATURE/BLOCK:

Hardesty & Hanover, LLC
59 Elm Street
New Haven, CT 06510

PROJECT TITLE:
REHABILITATION OF BRIDGE NO. 01343 ROUTE 133 OVER HOUSATONIC RIVER

TOWN: BROOKFIELD/BRIDGEWATER

PROJECT NO. 18-134

DRAWING TITLE: STRUCT. STEEL REPAIRS NOTES, LEGEND & QUANTITIES

DRAWING NO. S-11

SHEET NO. 05.11

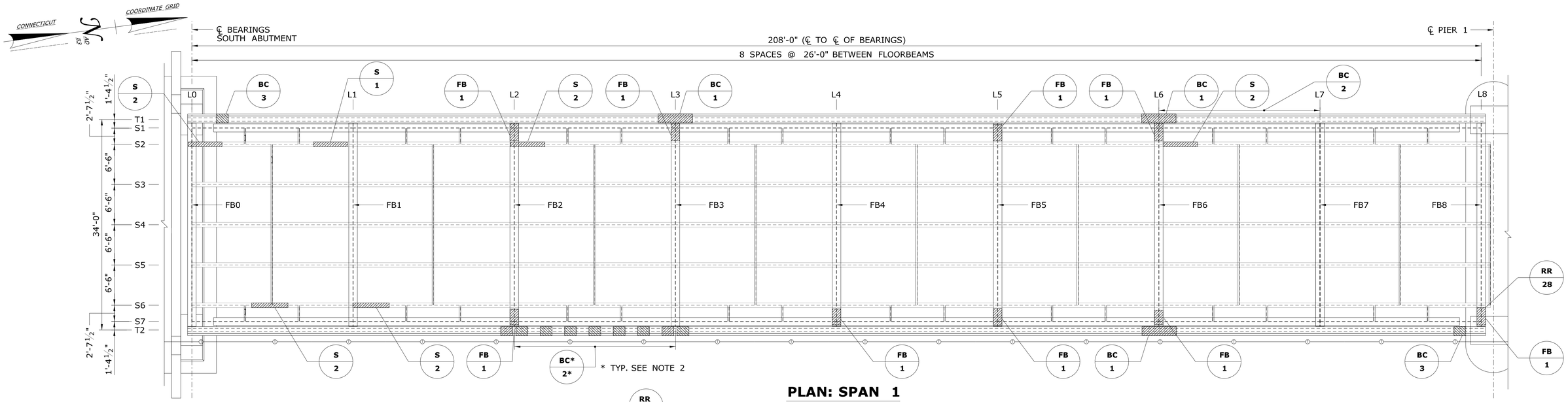

PLAN: SPAN 1

SCALE: 1/8" = 1'-0"

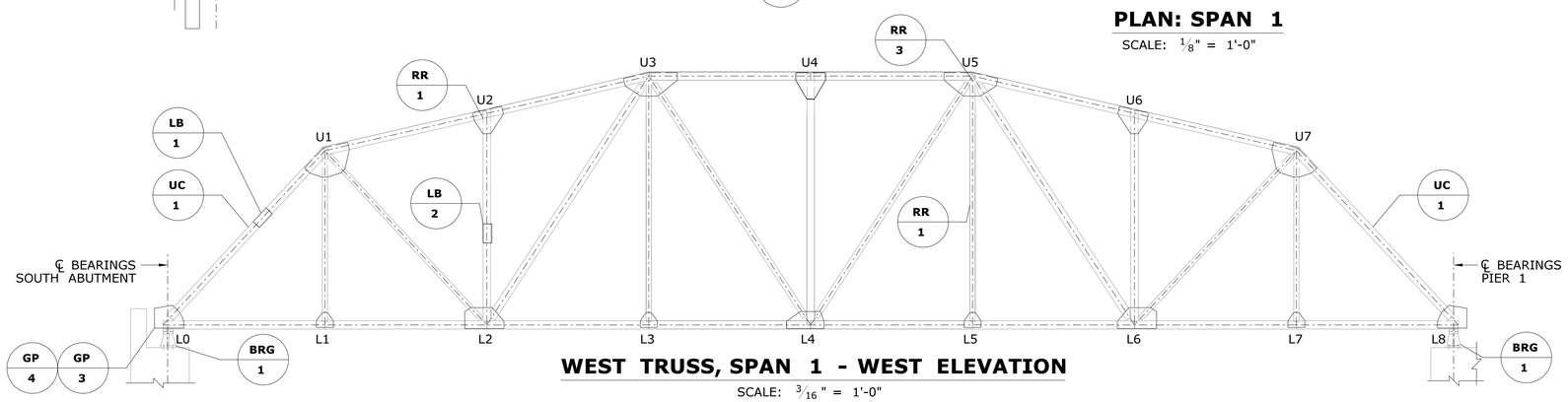

WEST TRUSS, SPAN 1 - WEST ELEVATION

SCALE: 3/16" = 1'-0"

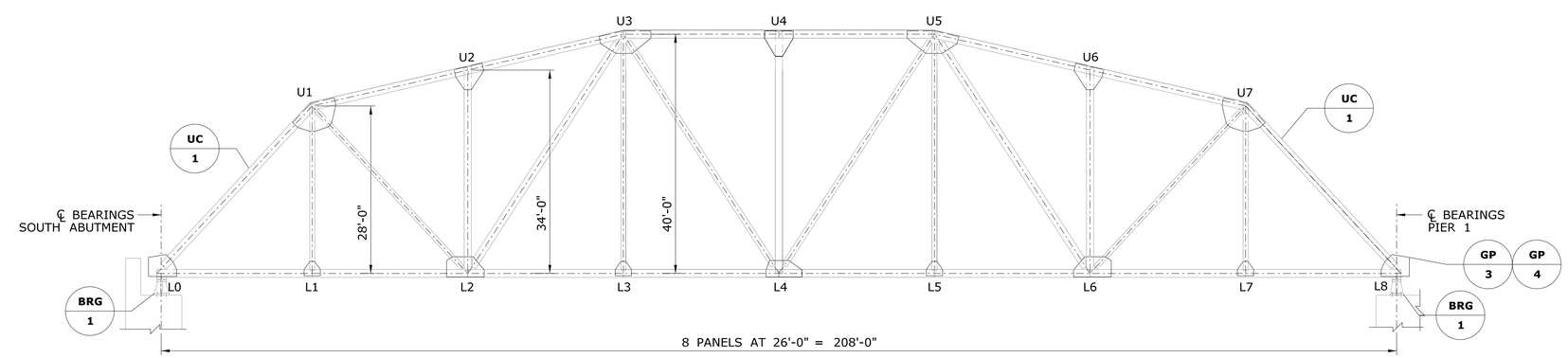

EAST TRUSS, SPAN 1 - WEST ELEVATION

SCALE: 3/16" = 1'-0"

NOTES:

1. SEE DWG NO. S-16 TO S-21 FOR STEEL REPAIR DETAILS.
2. BOTTOM CHORD BOTTOM FLANGE REPAIR IS REQUIRED AT ALL BOTTOM CHORD BATTEN PL. LOCATIONS BETWEEN NODES L2 AND L6, UNLESS OTHERWISE NOTED. ONLY ONE (1) PANEL OF THIS REPAIR TYPE IS SHOWN FOR CLARITY.

REV.	DATE	REVISION DESCRIPTION	SHEET NO.
-	-	-	-
-	-	-	-
-	-	-	-
-	-	-	-
-	-	-	-
-	-	-	-

THE INFORMATION, INCLUDING ESTIMATED QUANTITIES OF WORK, SHOWN ON THESE SHEETS IS BASED ON LIMITED INVESTIGATIONS BY THE STATE AND IS IN NO WAY WARRANTED TO INDICATE THE CONDITIONS OF ACTUAL QUANTITIES OF WORK WHICH WILL BE REQUIRED.

Plotted Date: $DATE$

DESIGNER/DRAFTER: SS

CHECKED BY: BNK

SCALE AS NOTED

STATE OF CONNECTICUT
DEPARTMENT OF TRANSPORTATION

Filename: $FILEA$

SIGNATURE/BLOCK:

Hardesty & Hanover, LLC
59 Elm Street
New Haven, CT 06510

PROJECT TITLE:
REHABILITATION OF BRIDGE NO. 01343 ROUTE 133 OVER HOUSATONIC RIVER

TOWN: BROOKFIELD/BRIDGEWATER

DRAWING TITLE: FRAMING PLAN SPAN 1

PROJECT NO. 18-134

DRAWING NO. S-12

SHEET NO. 05.12

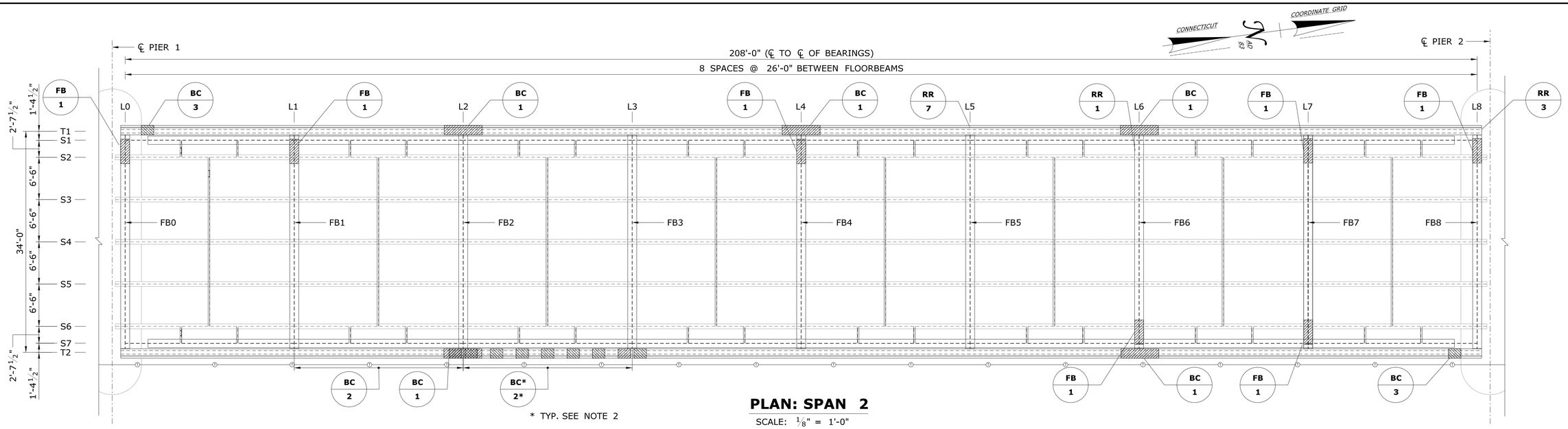

PLAN: SPAN 2

SCALE: 1/8" = 1'-0"

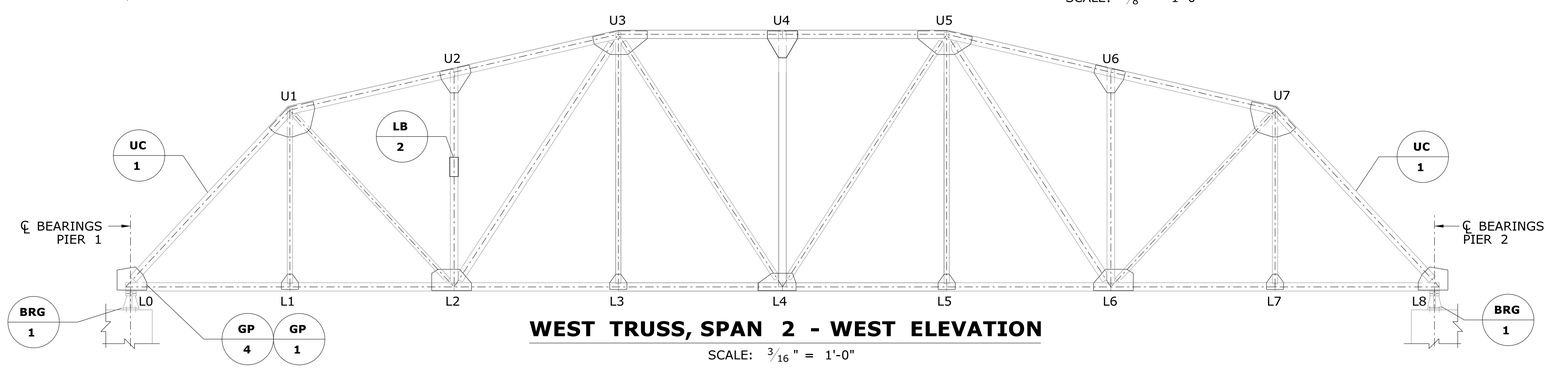

WEST TRUSS, SPAN 2 - WEST ELEVATION

SCALE: 3/16" = 1'-0"

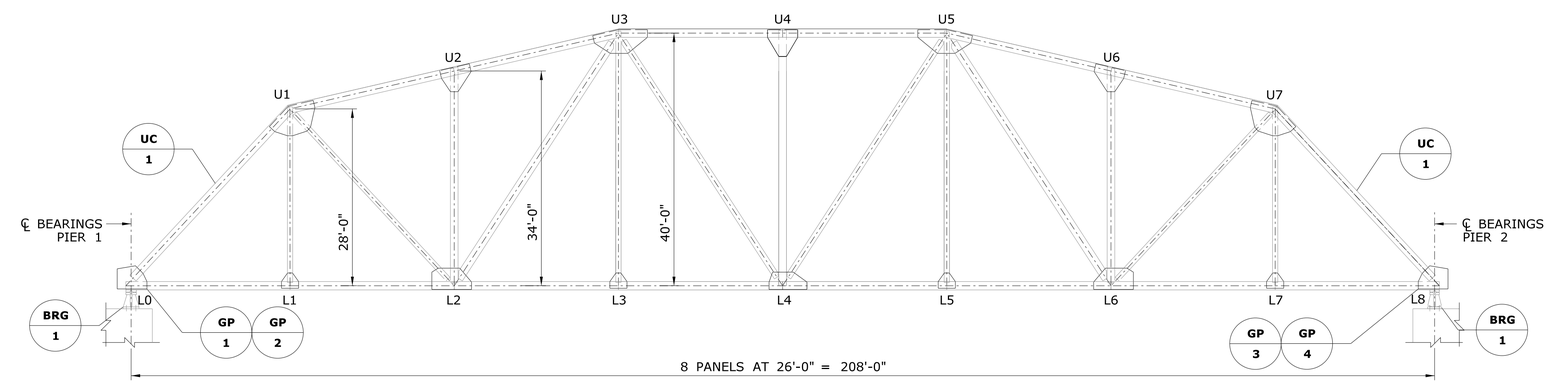

EAST TRUSS, SPAN 2 - WEST ELEVATION

SCALE: 3/16" = 1'-0"

NOTES:

1. SEE DWG NO. S-16 TO S-21 FOR STEEL REPAIR DETAILS.
2. BOTTOM CHORD BOTTOM FLANGE REPAIR IS REQUIRED AT ALL BOTTOM CHORD BATTEN PL. LOCATIONS BETWEEN NODES L2 AND L6, UNLESS OTHERWISE NOTED. ONLY ONE (1) PANEL OF THIS REPAIR TYPE IS SHOWN FOR CLARITY.

REV.	DATE	REVISION DESCRIPTION	SHEET NO.
-	-	-	-
-	-	-	-
-	-	-	-
-	-	-	-
-	-	-	-
-	-	-	-

THE INFORMATION, INCLUDING ESTIMATED QUANTITIES OF WORK, SHOWN ON THESE SHEETS IS BASED ON LIMITED INVESTIGATIONS BY THE STATE AND IS IN NO WAY WARRANTED TO INDICATE THE CONDITIONS OF ACTUAL QUANTITIES OF WORK WHICH WILL BE REQUIRED.

Plotted Date: $DATE$

DESIGNER/DRAFTER: SS

CHECKED BY: BNK

SCALE AS NOTED

STATE OF CONNECTICUT
DEPARTMENT OF TRANSPORTATION

Filename: $FILEA$

SIGNATURE/BLOCK:

Hardesty & Hanover, LLC
59 Elm Street
New Haven, CT 06510

PROJECT TITLE:
REHABILITATION OF BRIDGE NO. 01343 ROUTE 133 OVER HOUSATONIC RIVER

TOWN: BROOKFIELD/BRIDGEWATER

PROJECT NO. 18-134

DRAWING TITLE: FRAMING PLAN SPAN 2

DRAWING NO. S-13

SHEET NO. 05.13

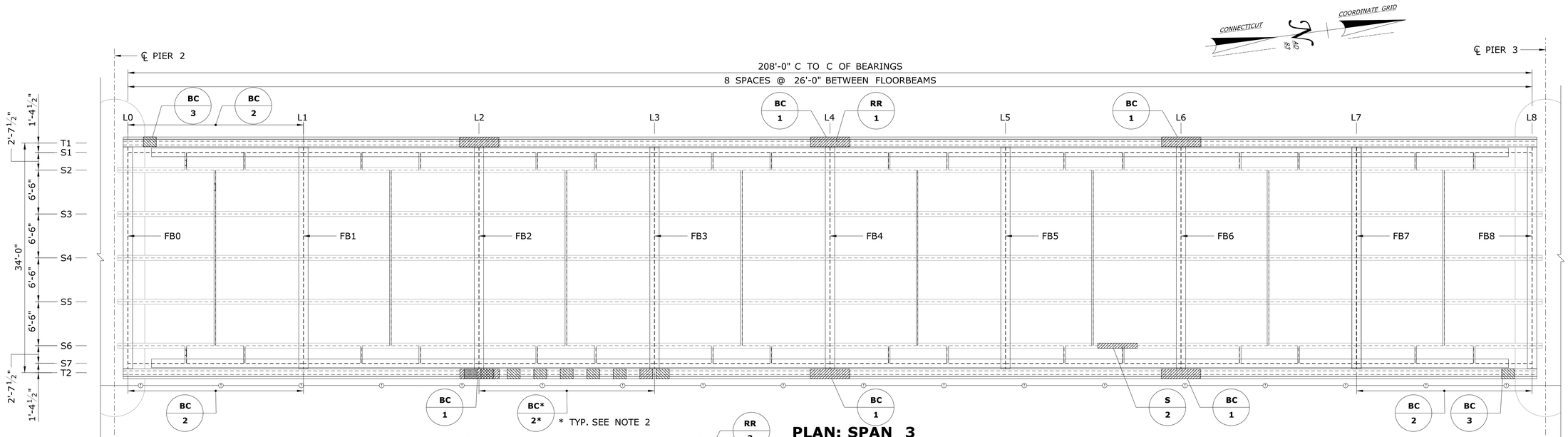

PLAN: SPAN 3

SCALE: 1/8" = 1'-0"

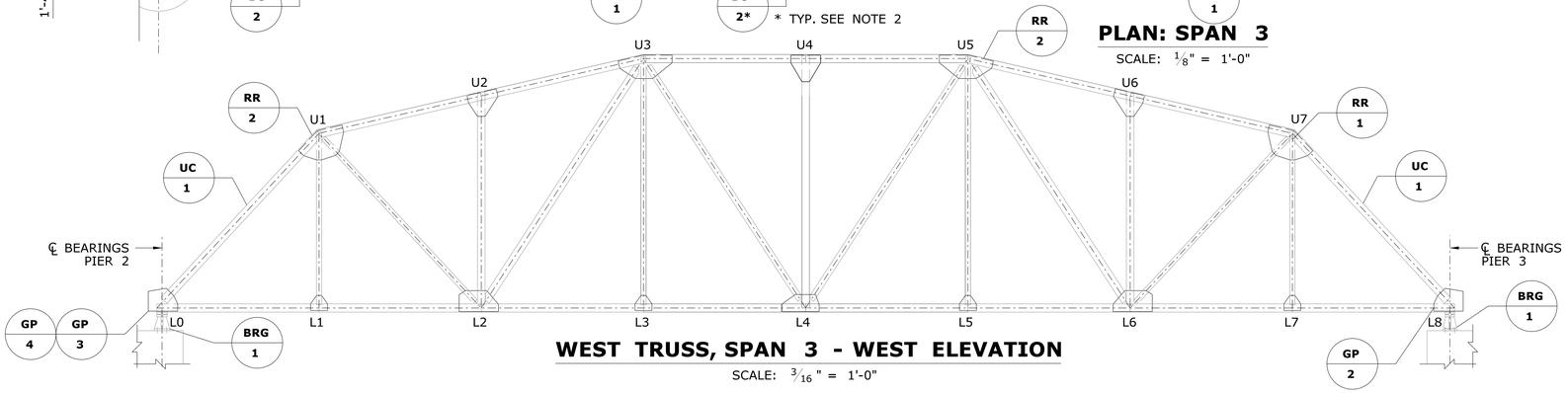

WEST TRUSS, SPAN 3 - WEST ELEVATION

SCALE: 3/16" = 1'-0"

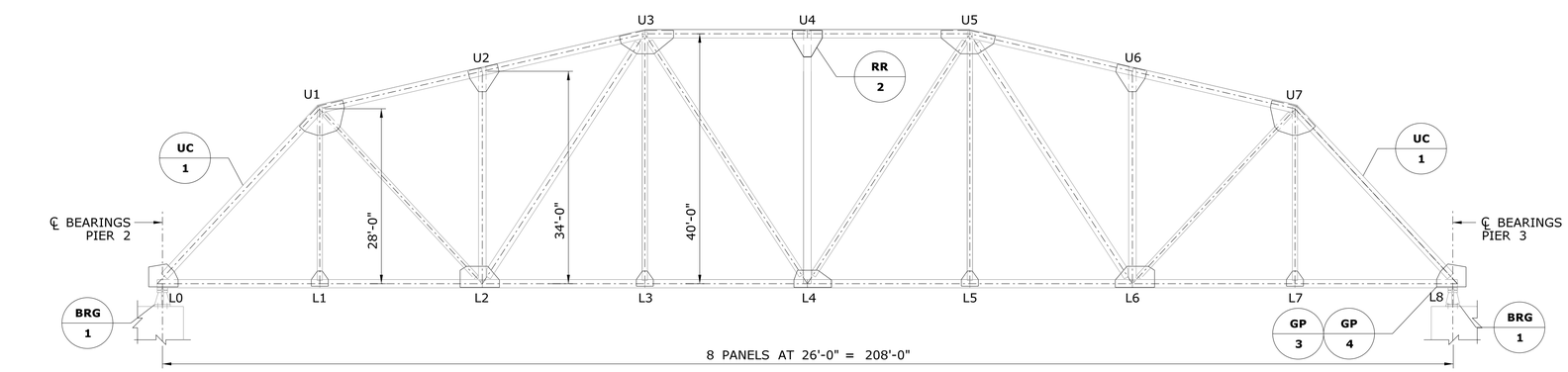

EAST TRUSS, SPAN 3 - WEST ELEVATION

SCALE: 3/16" = 1'-0"

NOTES:

1. SEE DWG NO. S-16 TO S-21 FOR STEEL REPAIR DETAILS.
2. BOTTOM CHORD BOTTOM FLANGE REPAIR IS REQUIRED AT ALL BOTTOM CHORD BATTEN PL. LOCATIONS BETWEEN NODES L2 AND L6, UNLESS OTHERWISE NOTED. ONLY ONE (1) PANEL OF THIS REPAIR TYPE IS SHOWN FOR CLARITY.

REV.	DATE	REVISION DESCRIPTION	SHEET NO.
-	-	-	-
-	-	-	-
-	-	-	-
-	-	-	-
-	-	-	-
-	-	-	-

THE INFORMATION, INCLUDING ESTIMATED QUANTITIES OF WORK, SHOWN ON THESE SHEETS IS BASED ON LIMITED INVESTIGATIONS BY THE STATE AND IS IN NO WAY WARRANTED TO INDICATE THE CONDITIONS OF ACTUAL QUANTITIES OF WORK WHICH WILL BE REQUIRED.

Plotted Date: $DATE$

DESIGNER/DRAFTER: SS

CHECKED BY: BNK

SCALE AS NOTED

STATE OF CONNECTICUT
DEPARTMENT OF TRANSPORTATION

Filename: $FILEA$

SIGNATURE/BLOCK:

Hardesty & Hanover, LLC
59 Elm Street
New Haven, CT 06510

PROJECT TITLE:
REHABILITATION OF BRIDGE NO. 01343 ROUTE 133 OVER HOUSATONIC RIVER

TOWN: BROOKFIELD/BRIDGEWATER

DRAWING TITLE: FRAMING PLAN SPAN 3

PROJECT NO. 18-134

DRAWING NO. S-14

SHEET NO. 05.14

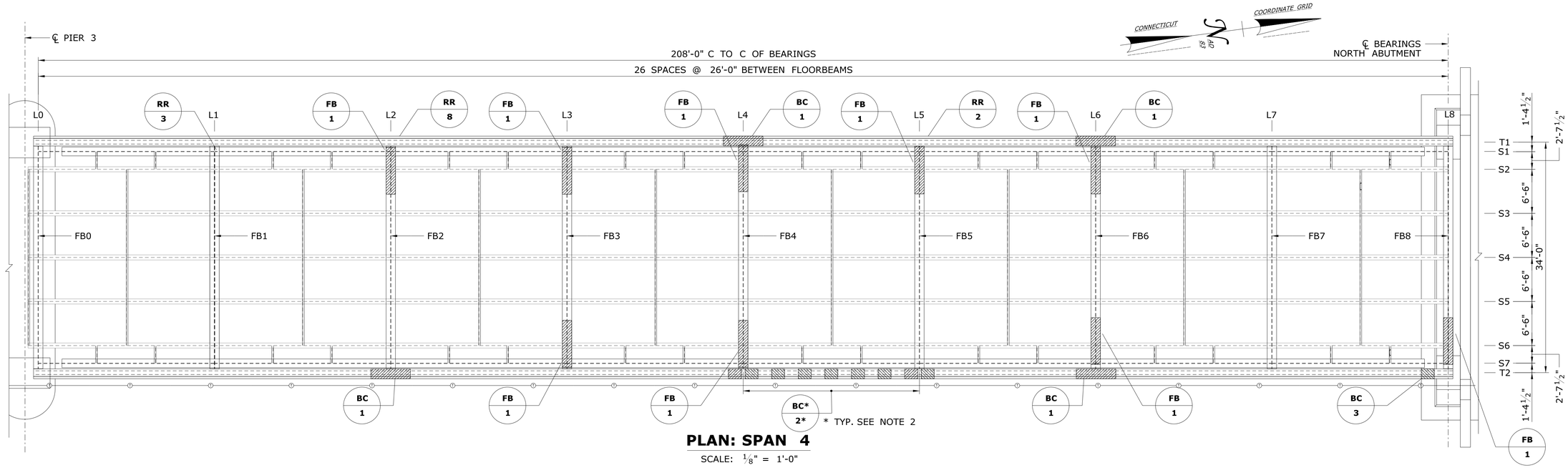

PLAN: SPAN 4

SCALE: 1/8" = 1'-0"

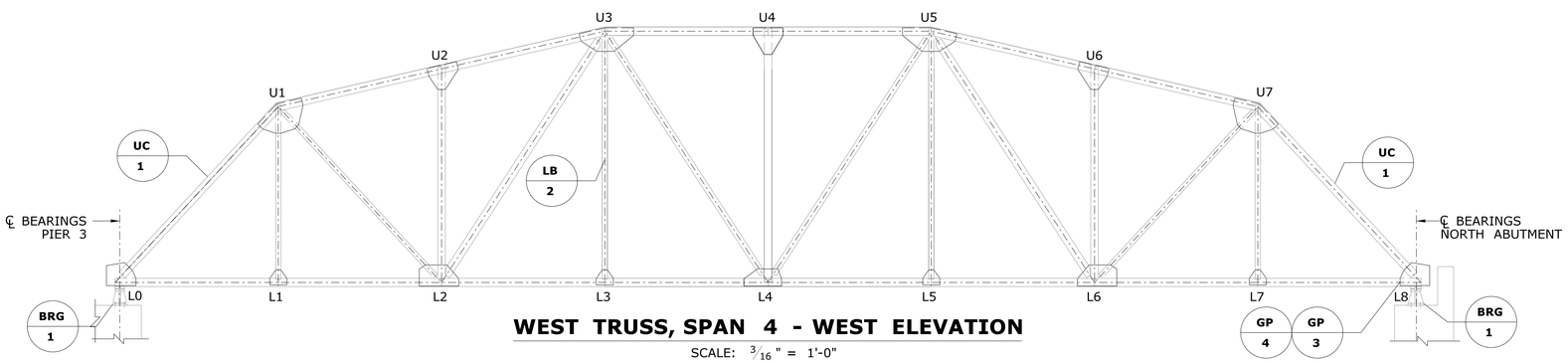

WEST TRUSS, SPAN 4 - WEST ELEVATION

SCALE: 3/16" = 1'-0"

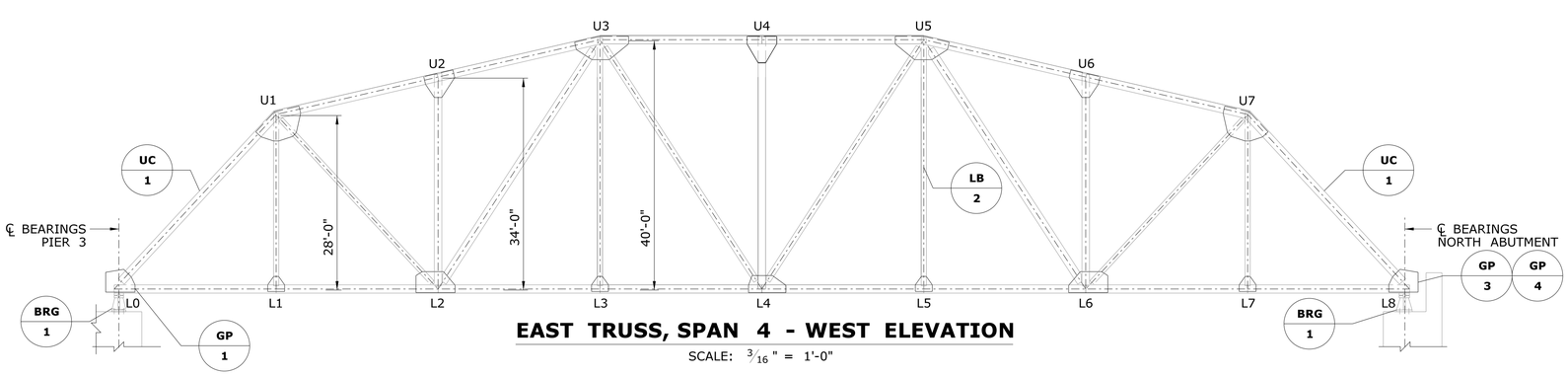

EAST TRUSS, SPAN 4 - WEST ELEVATION

SCALE: 3/16" = 1'-0"

NOTES:

1. SEE DWG NO. S-16 TO S-21 FOR STEEL REPAIR DETAILS.
2. BOTTOM CHORD BOTTOM FLANGE REPAIR IS REQUIRED AT ALL BOTTOM CHORD BATTEN PL. LOCATIONS BETWEEN NODES L2 AND L6, UNLESS OTHERWISE NOTED. ONLY ONE (1) PANEL OF THIS REPAIR TYPE IS SHOWN FOR CLARITY.

REV.	DATE	REVISION DESCRIPTION	SHEET NO.
-	-	-	-
-	-	-	-
-	-	-	-
-	-	-	-
-	-	-	-
-	-	-	-

THE INFORMATION, INCLUDING ESTIMATED QUANTITIES OF WORK, SHOWN ON THESE SHEETS IS BASED ON LIMITED INVESTIGATIONS BY THE STATE AND IS IN NO WAY WARRANTED TO INDICATE THE CONDITIONS OF ACTUAL QUANTITIES OF WORK WHICH WILL BE REQUIRED.

Plotted Date: $DATE$

DESIGNER/DRAFTER: SS

CHECKED BY: BNK

SCALE AS NOTED

STATE OF CONNECTICUT
DEPARTMENT OF TRANSPORTATION

Filename: $FILEA$

SIGNATURE/BLOCK:

Hardesty & Hanover, LLC
59 Elm Street
New Haven, CT 06510

PROJECT TITLE:
REHABILITATION OF BRIDGE NO. 01343 ROUTE 133 OVER HOUSATONIC RIVER

TOWN: BROOKFIELD/BRIDGEWATER

DRAWING TITLE: FRAMING PLAN SPAN 4

PROJECT NO. 18-134

DRAWING NO. S-15

SHEET NO. 05.15

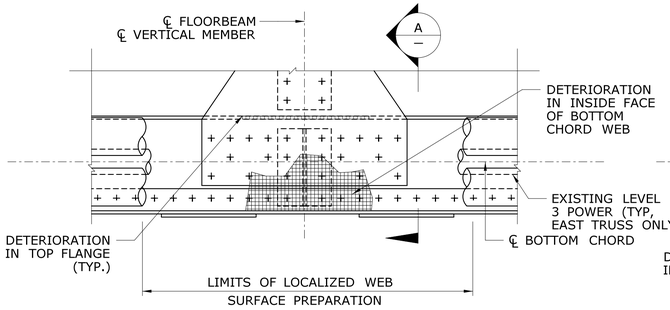

EXISTING
BOTTOM CHORD EXTERIOR ELEVATION

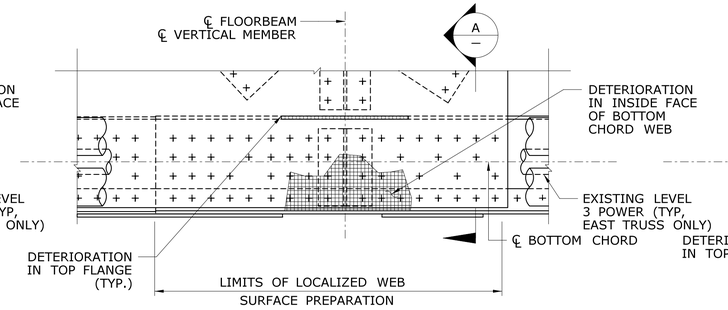

EXISTING
BOTTOM CHORD EXTERIOR ELEVATION

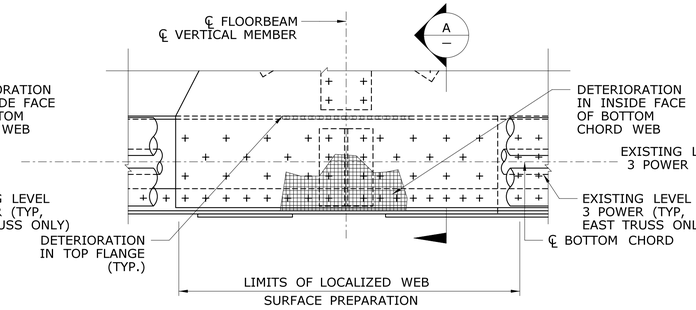

EXISTING
BOTTOM CHORD EXTERIOR ELEVATION

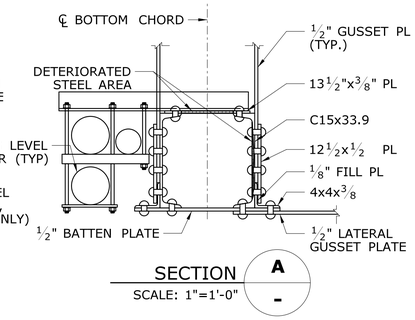

SECTION A
SCALE: 1"=1'-0"

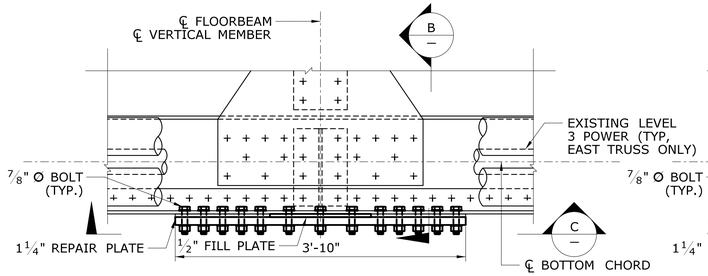

PROPOSED
BOTTOM CHORD EXTERIOR ELEVATION

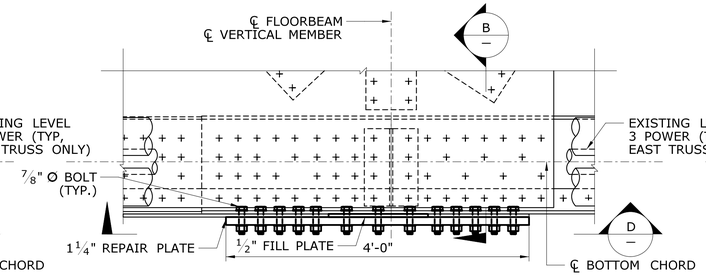

PROPOSED
BOTTOM CHORD EXTERIOR ELEVATION

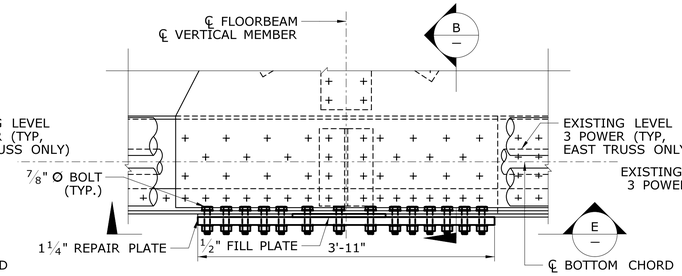

PROPOSED
BOTTOM CHORD EXTERIOR ELEVATION

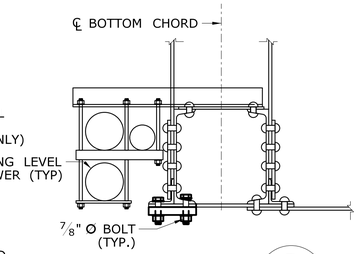

SECTION B
SCALE: 1"=1'-0"

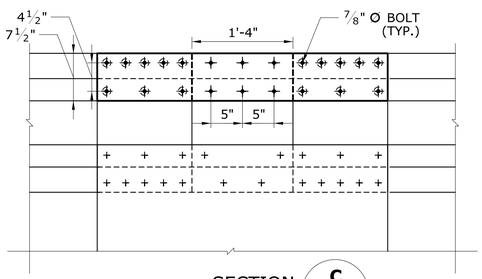

SECTION C
SCALE: 1"=1'-0"

BC-1 REPAIRS AT L3

SCALE: 1" = 1'-0"
NOTE: EXISTING LEVEL 3 UTILITIES (EAST TRUSS ONLY) NOT SHOWN

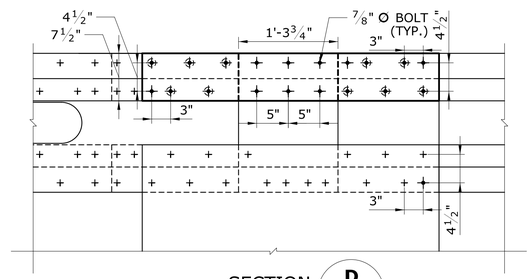

SECTION D
SCALE: 1"=1'-0"

BC-1 REPAIRS AT L2 & L6

SCALE: 1" = 1'-0"
NOTE: EXISTING LEVEL 3 UTILITIES (EAST TRUSS ONLY) NOT SHOWN

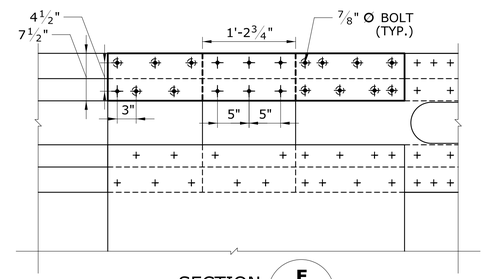

SECTION E
SCALE: 1"=1'-0"

BC-1 REPAIRS AT L4

SCALE: 1" = 1'-0"
NOTE: EXISTING LEVEL 3 UTILITIES (EAST TRUSS ONLY) NOT SHOWN

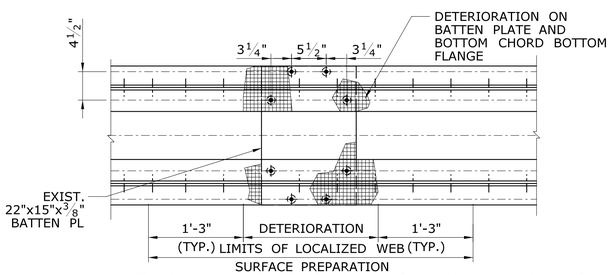

EXISTING BOTTOM CHORD PLAN (AT BATTEN PLATE)

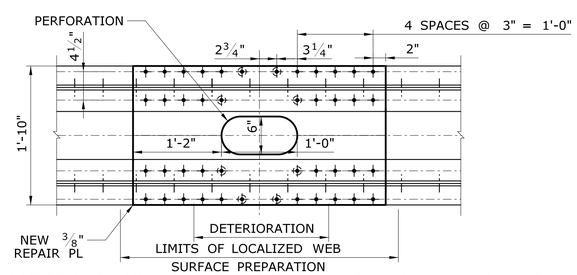

PROPOSED BOTTOM CHORD PLAN (AT BATTEN PLATE)

BC-2 REPAIRS

SCALE: 1" = 1'-0"
NOTE: EXISTING LEVEL 3 UTILITIES (EAST TRUSS ONLY) NOT SHOWN

LEGEND:

- DENOTES NEW BOLT IN EXISTING HOLE. REMOVE EXISTING RIVET OR BOLT
- DENOTES NEW BOLT IN NEW HOLE
- DENOTES OPEN HOLE (TO BE FILLED)
- DENOTES COUNTERSUNK RIVET OR BOLT
- DENOTES EXISTING RIVET

BC-1 AND BC-2 REPAIR PROCEDURE:

1. REMOVE EXISTING RIVETS AS SHOWN.
2. REMOVE ALL PAINT AND RUST WITHIN AN AREA ENCLOSED BY A PERIMETER LOCATED 3" BEYOND THE OUTLINE OF THE PROPOSED STEEL REPAIR PLATE.
3. APPLY EPOXY-BASED FILLER TO FILL AREAS OF SECTION LOSS AT INTERFACE BETWEEN DETERIORATION AND REPAIR PLATE.
4. INSTALL NEW STEEL REPAIR PLATE WITH HIGH STRENGTH BOLTS.
5. REPEAT STEPS 1-4 AS NECESSARY (FOR BC-1 AND BC-2 REPAIRS).
6. PAINT THE STEEL REPAIR PLATE AND SURROUNDING AREA. SEE DWG. NO. S-03 FOR PAINT COLOR.

NOTES:

1. SEE DWG NO. S-12 TO S-15 FOR FLOORSYSTEM REPAIR LOCATIONS.
2. SEE DWG. NO. S-21 FOR ESTIMATED LENGTHS OF REPAIRS.

REV.	DATE	REVISION DESCRIPTION	SHEET NO.
-	-	-	-
-	-	-	-
-	-	-	-
-	-	-	-
-	-	-	-
-	-	-	-

THE INFORMATION, INCLUDING ESTIMATED QUANTITIES OF WORK, SHOWN ON THESE SHEETS IS BASED ON LIMITED INVESTIGATIONS BY THE STATE AND IS IN NO WAY WARRANTED TO INDICATE THE CONDITIONS OF ACTUAL QUANTITIES OF WORK WHICH WILL BE REQUIRED.

Plotted Date: 8/28/2018

DESIGNER/DRAFTER: SS
CHECKED BY: BNK
SCALE AS NOTED

STATE OF CONNECTICUT
DEPARTMENT OF TRANSPORTATION

Filename: ...\SB_MSH_BR01343_018_134_FD_Steel_Repairs_1.dgn

SIGNATURE/BLOCK:
Hardesty & Hanover, LLC
59 Elm Street
New Haven, CT 06510

PROJECT TITLE:
REHABILITATION OF BRIDGE NO. 01343 ROUTE 133 OVER HOUSATONIC RIVER

TOWN: BROOKFIELD/BRIDGEWATER
PROJECT NO. 18-134
DRAWING TITLE: STRUCT. STEEL REPAIR DETAILS - 1 BOTTOM CHORD
DRAWING NO. S-16
SHEET NO. 05.16

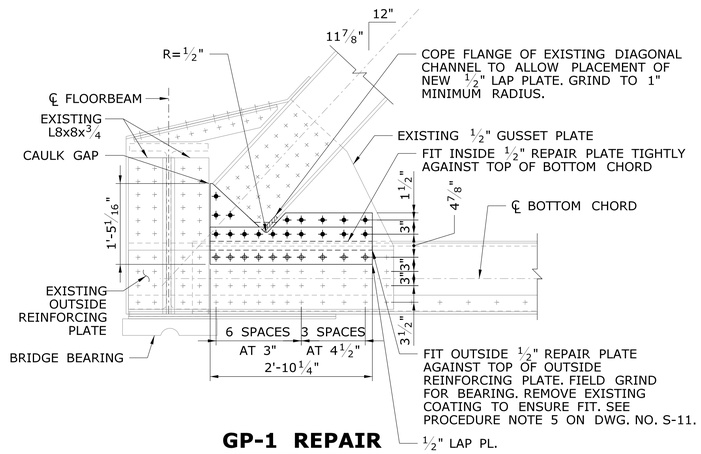

GP-1 REPAIR
INTERIOR GUSSET (TYPE A)

SCALE: 3/4" = 1'-0"

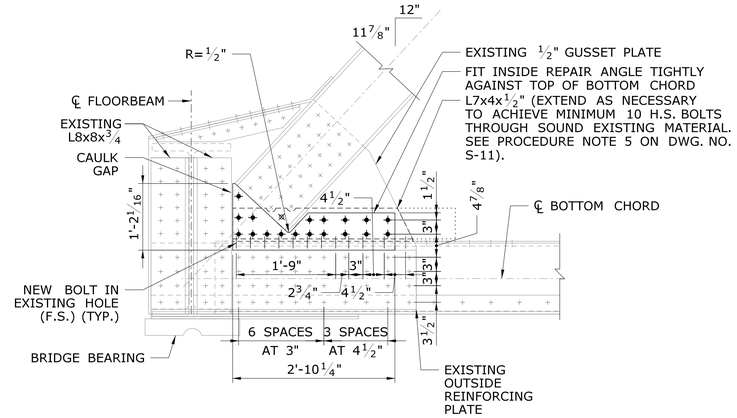

GP-1 REPAIR
INTERIOR GUSSET (TYPE B)

SCALE: 3/4" = 1'-0"

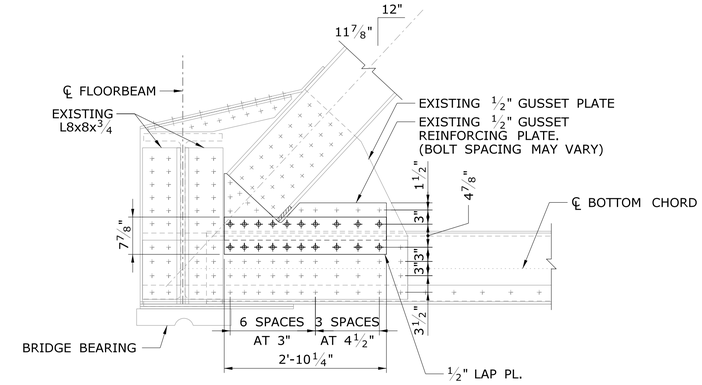

GP-3 STRENGTHENING
INTERIOR GUSSET (TYPE B)

SCALE: 3/4" = 1'-0"

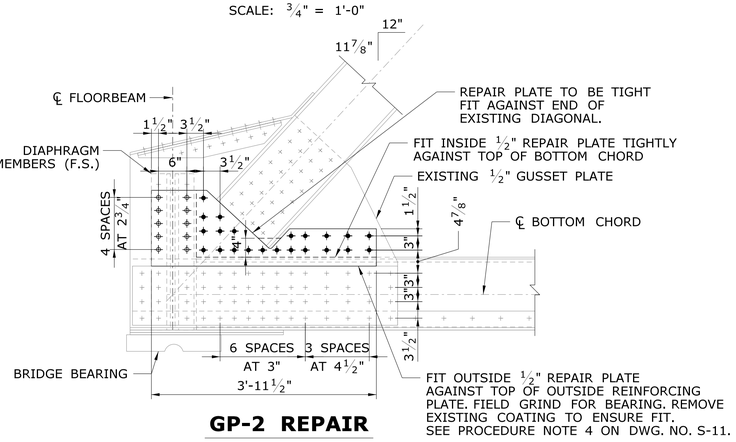

GP-2 REPAIR
EXTERIOR GUSSET

SCALE: 3/4" = 1'-0"

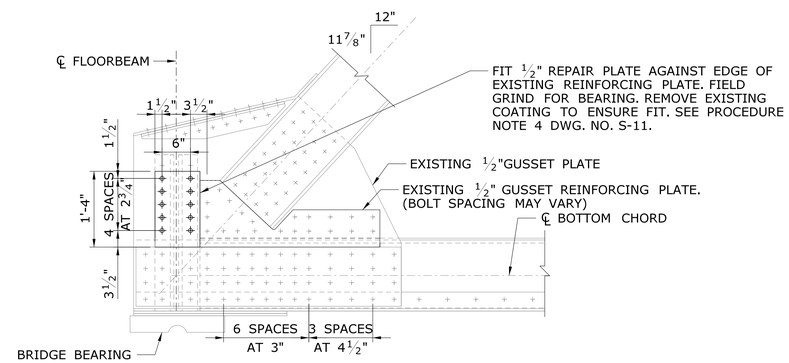

GP-4 STRENGTHENING
EXTERIOR GUSSET

SCALE: 3/4" = 1'-0"

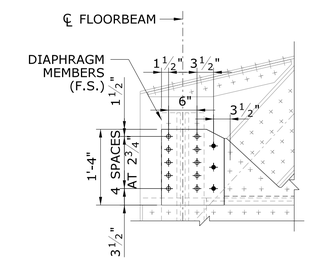

(ALTERNATIVE REPAIR)

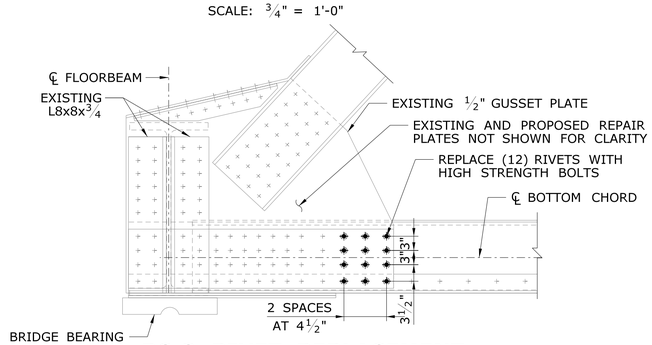

BC-3 RIVET REPLACEMENT
INTERIOR GUSSET

SCALE: 3/4" = 1'-0"
SEE NOTE 3

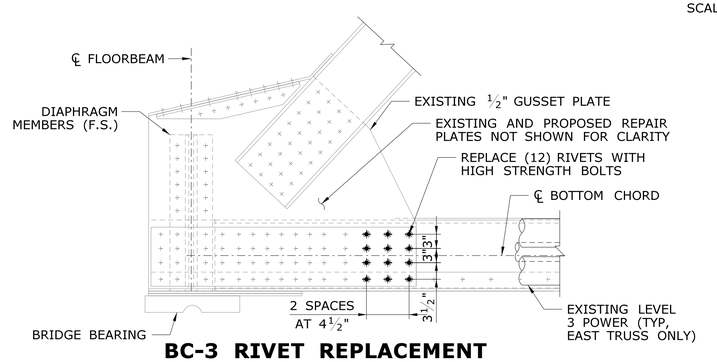

BC-3 RIVET REPLACEMENT
EXTERIOR GUSSET

SCALE: 3/4" = 1'-0"
SEE NOTE 3

LEGEND:

- DENOTES NEW BOLT IN EXISTING HOLE. REMOVE EXISTING RIVET OR BOLT
- DENOTES NEW BOLT IN NEW HOLE
- DENOTES OPEN HOLE (TO BE FILLED)
- DENOTES COUNTERSUNK RIVET OR BOLT
- DENOTES EXISTING RIVET

NOTES:

1. SEE DWG. NO. S-11 FOR GUSSET REPAIR PROCEDURES AND NOTES.
2. SEE DWG NO. S-12 TO S-15 FOR GUSSET REPAIR LOCATIONS.
3. BOTH INTERNAL AND EXTERNAL GUSSET RIVET REPLACEMENTS SHALL BE IMPLEMENTED AT THE FOLLOWING LOCATIONS:

SPAN #	WEST TRUSS (T1)	EAST TRUSS (T2)
1	L0	L8
2	L0	L8
3	L0	L8
4	-	L8

REV.	DATE	REVISION DESCRIPTION	SHEET NO.
-	-	-	-
-	-	-	-
-	-	-	-
-	-	-	-
-	-	-	-
-	-	-	-

THE INFORMATION, INCLUDING ESTIMATED QUANTITIES OF WORK, SHOWN ON THESE SHEETS IS BASED ON LIMITED INVESTIGATIONS BY THE STATE AND IS IN NO WAY WARRANTED TO INDICATE THE CONDITIONS OF ACTUAL QUANTITIES OF WORK WHICH WILL BE REQUIRED.

Plotted Date: $DATE$

DESIGNER/DRAFTER: SS
CHECKED BY: BNK
SCALE AS NOTED

STATE OF CONNECTICUT
DEPARTMENT OF TRANSPORTATION

Filename: $FILEA$

SIGNATURE/BLOCK:
Hardesty & Hanover, LLC
59 Elm Street
New Haven, CT 06510

PROJECT TITLE:
REHABILITATION OF BRIDGE NO. 01343 ROUTE 133 OVER HOUSATONIC RIVER

TOWN: BROOKFIELD/BRIDGEWATER
PROJECT NO. 18-134
DRAWING TITLE: STRUCT. STEEL REPAIR DETAILS - 2 GUSSET PLATES
DRAWING NO. S-17
SHEET NO. 05.17

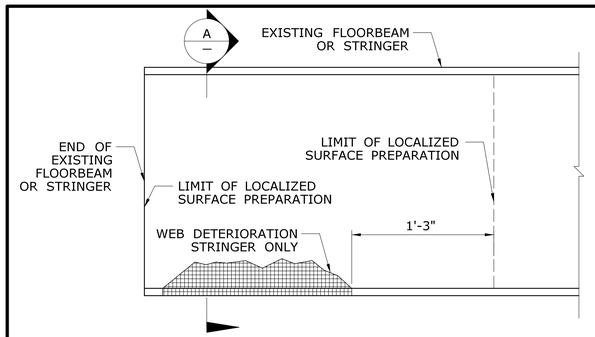

EXISTING FLOORBEAM OR STRINGER

SCALE: 1½" = 1'-0"

NOTE: STRINGER DIMENSIONS ARE SHOWN. FLOORBEAM IS SIMILAR.

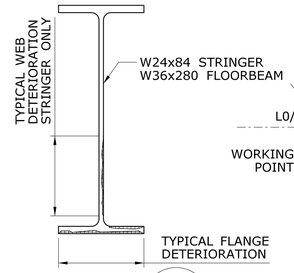

SECTION A
SCALE: 1½"=1'-0"

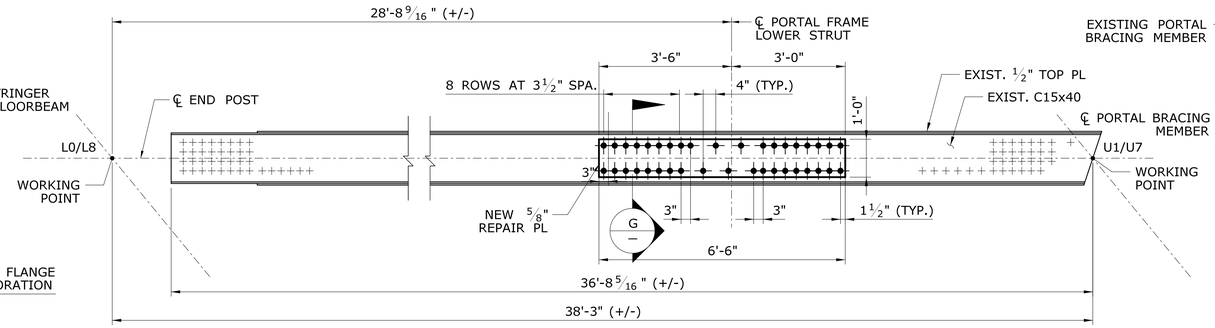

DETAIL 1
SCALE: ½"=1'-0"

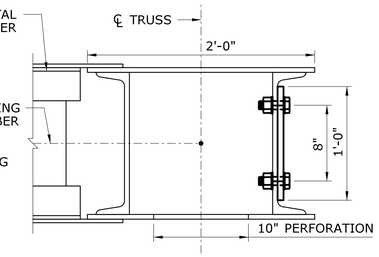

SECTION G
SCALE: 1½"=1'-0"

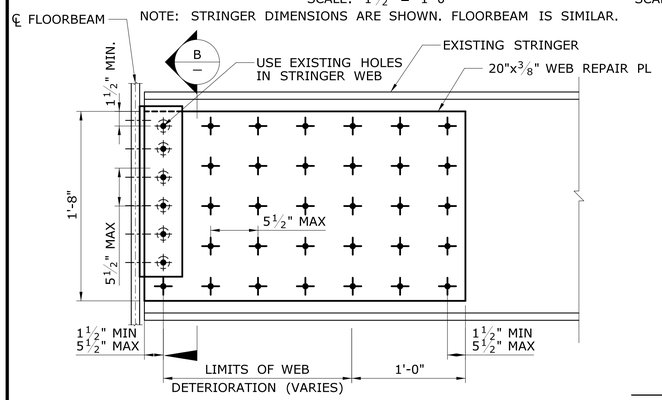

S-1 REPAIR

STRINGER ELEVATION

SCALE: 1½" = 1'-0"

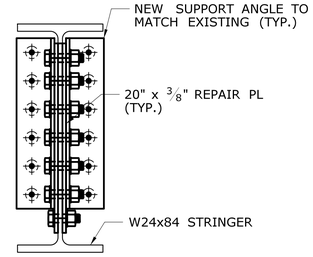

SECTION B
SCALE: 1½"=1'-0"

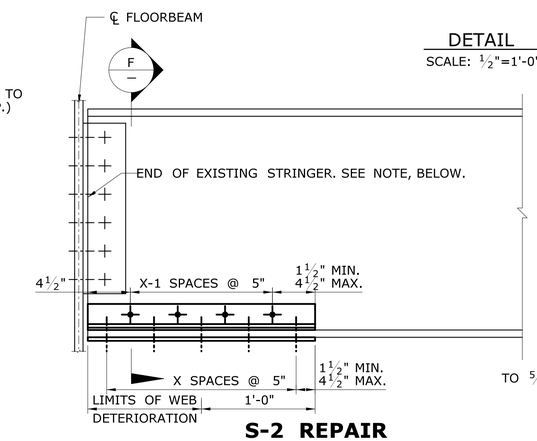

S-2 REPAIR

STRINGER ELEVATION

SCALE: 1½" = 1'-0"

NOTE: FOR S-2 REPAIR LOCATIONS NOT AT ENDS OF STRINGERS, REPAIR PLATES WILL EXTEND 1'-0" BEYOND BOTH ENDS OF DETERIORATED SECTION.

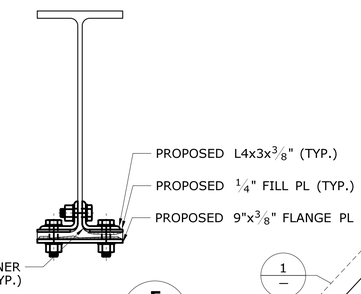

SECTION F
SCALE: 1½"=1'-0"

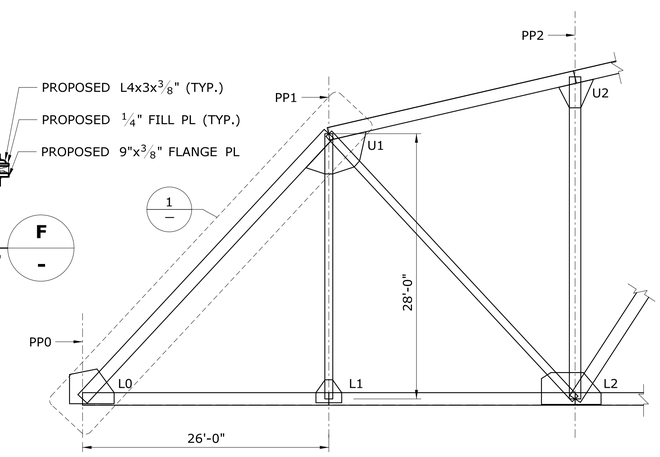

UC-1 REPAIR

ELEVATION: STRENGTHENING AT END POST

SCALE: ⅛" = 1'-0"

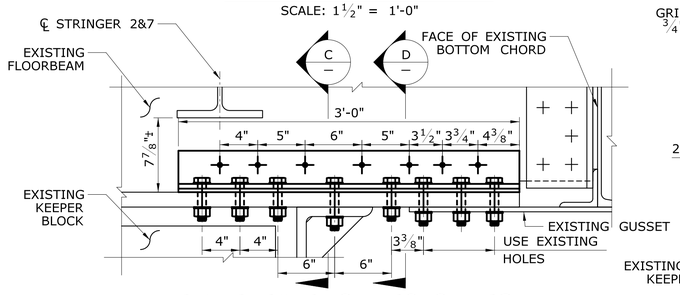

FB-1 REPAIR @ FB0 & FB8

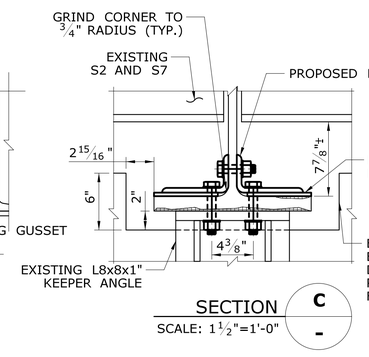

SECTION C
SCALE: 1½"=1'-0"

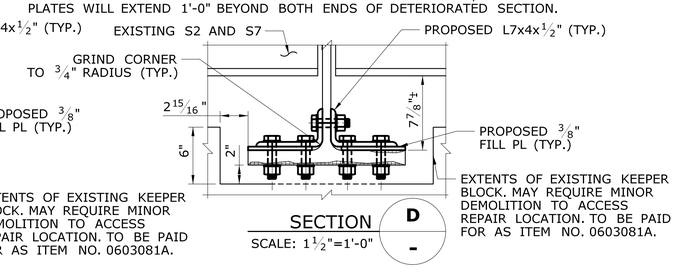

SECTION D
SCALE: 1½"=1'-0"

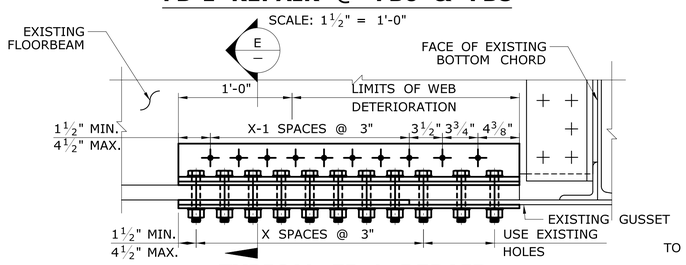

TYPICAL FB-1 REPAIR

SCALE: 1½" = 1'-0"

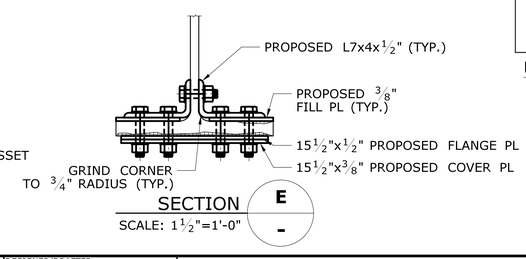

SECTION E
SCALE: 1½"=1'-0"

LEGEND:

- ⊕ DENOTES NEW BOLT IN EXISTING HOLE. REMOVE EXISTING RIVET OR BOLT
- ⊕ DENOTES NEW BOLT IN NEW HOLE
- ○ DENOTES OPEN HOLE (TO BE FILLED)
- + DENOTES EXISTING RIVET

UC-1 STRENGTHENING PROCEDURE:

1. REMOVE ALL PAINT AND RUST WITHIN AN AREA ENCLOSED BY A PERIMETER LOCATED 3" BEYOND THE OUTLINE OF THE PROPOSED STEEL STRENGTHENING PLATE.
2. INSTALL NEW STEEL STRENGTHENING PLATE WITH HIGH STRENGTH BOLTS.
3. PAINT THE STEEL REPAIR PLATE AND SURROUNDING AREA. SEE DWG. NO. S-03 FOR PAINT COLOR.

S-1, S-2 AND FB-1 REPAIR PROCEDURE:

1. REMOVE ALL PAINT AND RUST WITHIN AN AREA ENCLOSED BY A PERIMETER LOCATED 3" BEYOND THE OUTLINE OF THE PROPOSED STEEL REPAIR PLATE.
2. APPLY EPOXY-BASED FILLER TO FILL AREAS OF SECTION LOSS.
3. INSTALL NEW STEEL REPAIR PLATE WITH HIGH STRENGTH BOLTS.
4. PAINT THE STEEL REPAIR PLATE AND SURROUNDING AREA. SEE DWG. NO. S-03 FOR PAINT COLOR.

NOTES:

1. SEE SHEET S-12 TO S-15 FOR FLOORSYSTEM AND END POST REPAIR LOCATIONS.
2. CONTRACTOR SHALL COMPLETE TYPE S-1 REPAIR AFTER REMOVAL OF EXISTING DECK AND PRIOR TO INSTALLATION OF EXODERMIC DECK.
3. CONTRACTOR SHALL VERIFY ALL LOSSES AND REPAIR LENGTHS PRIOR TO FABRICATION.

REV.	DATE	REVISION DESCRIPTION	SHEET NO.
-	-	-	-
-	-	-	-
-	-	-	-
-	-	-	-
-	-	-	-
-	-	-	-

THE INFORMATION, INCLUDING ESTIMATED QUANTITIES OF WORK, SHOWN ON THESE SHEETS IS BASED ON LIMITED INVESTIGATIONS BY THE STATE AND IS IN NO WAY WARRANTED TO INDICATE THE CONDITIONS OF ACTUAL QUANTITIES OF WORK WHICH WILL BE REQUIRED.

Plotted Date: 8/28/2018

DESIGNER/DRAFTER: SS
CHECKED BY: BNK
SCALE AS NOTED

STATE OF CONNECTICUT
DEPARTMENT OF TRANSPORTATION

Filename: ...\SB_MSH_BR01343_018_134_FD_Steel_Repairs_3.dgn

SIGNATURE/BLOCK:
Hardesty & Hanover, LLC
59 Elm Street
New Haven, CT 06510

PROJECT TITLE:
REHABILITATION OF BRIDGE NO. 01343 ROUTE 133 OVER HOUSATONIC RIVER

TOWN: BROOKFIELD/BRIDGEWATER
PROJECT NO. 18-134
DRAWING TITLE: STRUCT. STEEL REPAIR DETAILS - 3 FLOORSYS. & END POST
DRAWING NO. S-18
SHEET NO. 05.18

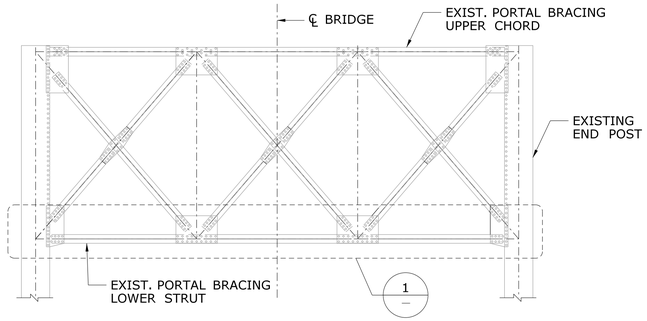

LB-1 REPAIR
(AT END PORTAL SECTION)

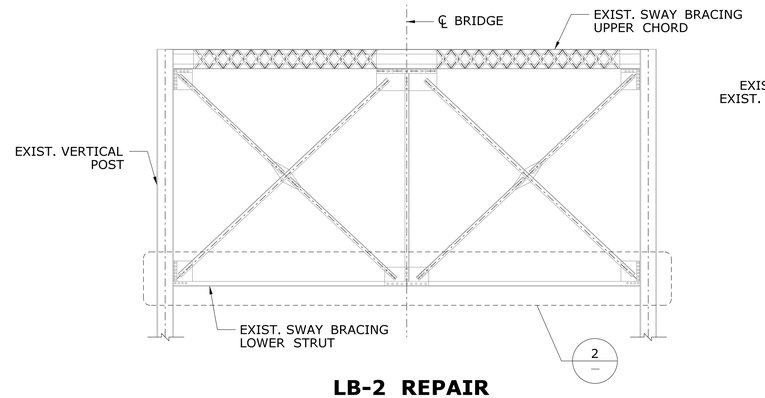

LB-2 REPAIR
(AT INTERMEDIATE PORTAL SECTION)

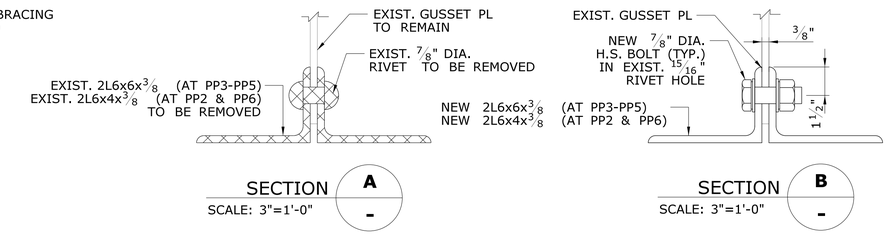

NOTE: REPAIR AT PP1 & PP6 IS SHOWN, PP3-PP5 IS SIMILAR

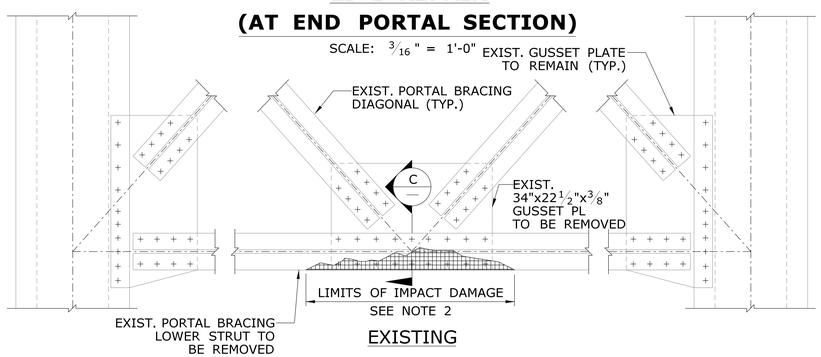

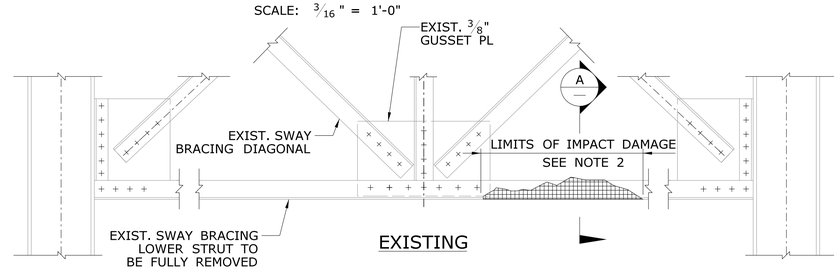

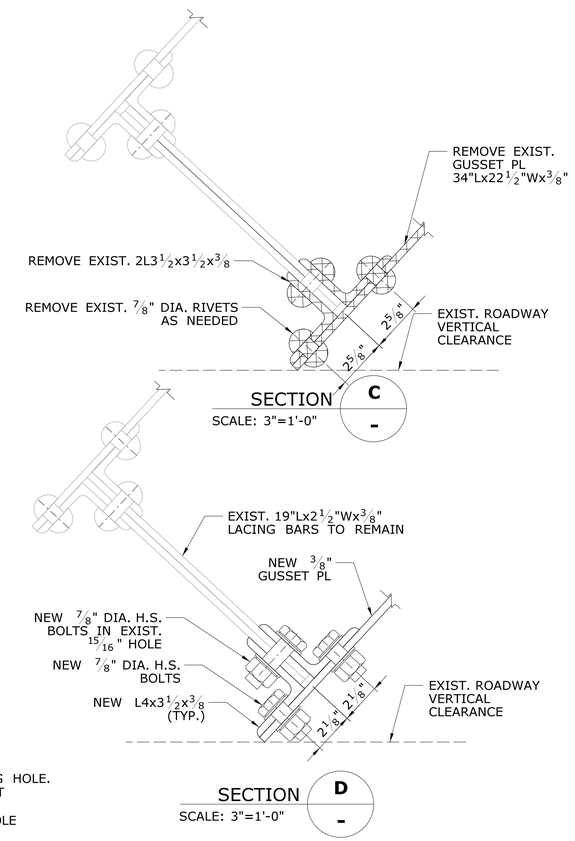

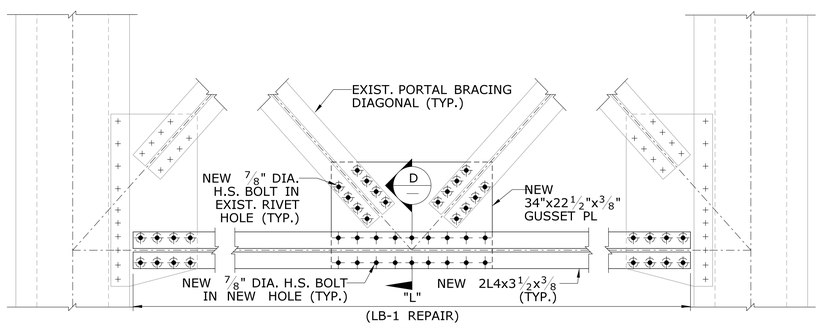

DETAIL 1 / -
SCALE: 3/4"=1'-0"

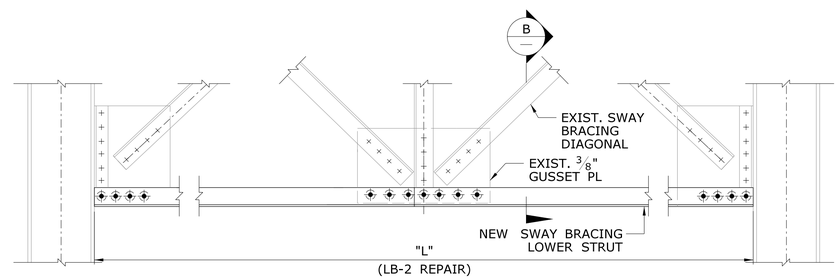

DETAIL 2 / -
SCALE: 3/4"=1'-0"

NOTE: REPAIR AT U2 & U6 IS SHOWN, U3-U5 IS SIMILAR

LEGEND:

- DENOTES NEW BOLT IN EXISTING HOLE. REMOVE EXISTING RIVET OR BOLT
- DENOTES NEW BOLT IN NEW HOLE
- DENOTES OPEN HOLE (TO BE FILLED)
- DENOTES COUNTERSUNK RIVET OR BOLT
- DENOTES EXISTING RIVET

LB-1 SWAY BRACING (AT END PORTAL) REPAIR PROCEDURE:

1. PROCEED WITH REPAIR DURING 55-HOUR WEEKEND CLOSURE (2-LANE CLOSURE). DO NOT PERMIT ANY VEHICULAR OR PEDESTRIAN TRAFFIC.
2. REMOVE GUSSET PLATES.
3. REMOVE PORTAL BRACING LOWER STRUT ANGLES.
4. PREPARE THE STEEL ANGLE TO GUSSET CONNECTIONS AND SURROUNDING AREAS.
5. BOLT ON NEW PORTAL LOWER STRUT BRACING ANGLES. BOLT ON NEW GUSSET PLATE.
6. PAINT THE STEEL ANGLE TO GUSSET CONNECTIONS AND SURROUNDING AREA. SEE DWG. NO. S-03 FOR COLOR.

LB-2 SWAY BRACING (AT INTERMEDIATE PORTAL) REPAIR PROCEDURE:

1. PROCEED WITH REPAIR DURING 55-HOUR WEEKEND CLOSURE (2-LANE CLOSURE). DO NOT PERMIT ANY VEHICULAR OR PEDESTRIAN TRAFFIC.
2. REMOVE EXISTING (DAMAGED) SWAY BRACING.
3. PREPARE THE STEEL ANGLE TO GUSSET CONNECTIONS AND SURROUNDING AREAS.
4. BOLT NEW SWAY BRACING INTO PLACE UTILIZING EXISTING RIVET HOLES.
5. PAINT THE STEEL ANGLE TO GUSSET CONNECTIONS AND SURROUNDING AREA. SEE DWG. NO. S-03 FOR COLOR.

NOTES:

1. SEE DWG. NO S-11 TO S-15 FOR PORTAL/SWAY BRACING REPAIR LOCATIONS.
2. SEE DWG. NO. S-21 FOR ESTIMATED PORTAL/SWAY BRACING REPAIR LENGTHS.

REV.	DATE	REVISION DESCRIPTION	SHEET NO.
-	-	-	-
-	-	-	-
-	-	-	-
-	-	-	-
-	-	-	-
-	-	-	-

THE INFORMATION, INCLUDING ESTIMATED QUANTITIES OF WORK, SHOWN ON THESE SHEETS IS BASED ON LIMITED INVESTIGATIONS BY THE STATE AND IS IN NO WAY WARRANTED TO INDICATE THE CONDITIONS OF ACTUAL QUANTITIES OF WORK WHICH WILL BE REQUIRED.

Plotted Date: $DATE$

DESIGNER/DRAFTER: SS
CHECKED BY: BNK
SCALE AS NOTED

STATE OF CONNECTICUT
DEPARTMENT OF TRANSPORTATION

Filename: $FILEA$

SIGNATURE/BLOCK:
Hardesty & Hanover, LLC
59 Elm Street
New Haven, CT 06510
Hardesty & Hanover

PROJECT TITLE:
REHABILITATION OF BRIDGE NO. 01343 ROUTE 133 OVER HOUSATONIC RIVER

TOWN: BROOKFIELD/BRIDGEWATER
PROJECT NO. 18-134
DRAWING TITLE: STRUCT. STEEL REPAIR DETAILS - 4 PORTAL/SWAY BRACING
DRAWING NO. S-19
SHEET NO. 05.19

BOLT INSTALLATION IN EMPTY HOLES

1. THE CONTRACTOR SHALL INSTALL H.S. BOLTS IN EMPTY HOLES OF STRUCTURAL MEMBERS, AT LOCATIONS DESIGNATED BY THE ENGINEER. INSTALLATION OF BOLTS SHALL BE PAID FOR UNDER ITEM "REPLACE REMOVED OR MISSING RIVETS AND BOLTS WITH HIGH STRENGTH BOLTS".

RIVET REPLACEMENT NOTES

1. RIVETS REPLACED TO PERMIT REMOVAL OF ANY OF THE CONNECTED PARTS (WHETHER CALLED FOR ON THE PLANS OR ORDERED BY THE ENGINEER) SHALL BE REMOVED AND PAID FOR THE ITEM FOR "STRUCTURAL STEEL REPAIRS (SITE NO. 1)". HIGH STRENGTH BOLTS TO REPLACE SAME RIVETS SHALL BE INSTALLED AND PAID FOR UNDER THE ITEMS FOR "STRUCTURAL STEEL REPAIRS (SITE NO. 1)". WHEN RIVETS ARE REMOVED TO PERMIT REMOVAL OF A CONNECTED PART BUT NO REPLACEMENT STEEL ITEM PROVIDES BOLTS TO FILL THE OPEN HOLES, THE HOLES SHALL BE FILLED WITH HIGH STRENGTH BOLTS PAID FOR UNDER THE ITEM "REPLACE REMOVED OR MISSING RIVETS AND BOLTS WITH HIGH STRENGTH BOLTS".

2. AFTER CLEANING OF THE STEEL, ACCESS SHALL BE PROVIDED BY THE CONTRACTOR AND THE ENGINEER NOTIFIED SO THAT HE MAY MAKE A COMPLETE INSPECTION TO DETERMINE WHICH RIVETS REQUIRE REPLACEMENT. PAYMENT FOR PROVIDING ACCESS FOR INSPECTION SHALL BE INCLUDED UNDER THE CLEANING AND PAINTING CONTAINMENT ITEM. DETERIORATED RIVETS NOT COVERED UNDER NOTE #1 ABOVE WILL BE INSPECTED BY THE ENGINEER, WHO WILL ORDER THAT SPECIFIC RIVETS SHALL BE REPLACED WITH HIGH STRENGTH BOLTS IN ACCORDANCE WITH THE FOLLOWING GUIDELINES.

3. RIVETS (CONDITION B) WITH DIMENSIONS OF BOTH HEADS MEETING OR SURPASSING EACH OF THE MINIMUM REQUIREMENTS SHOWN FOR CONDITION B MAY BE LEFT IN PLACE SUBJECT TO CONDITIONS DESCRIBED IN NOTES 6 AND 7.

4. RIVETS (CONDITION C) NOT MEETING THE REQUIREMENTS OF CONDITION B, BUT HAVING DIMENSIONS WHICH MEET OR SURPASS AT BOTH HEADS EACH OF THE MINIMUM REQUIREMENTS SHOWN FOR CONDITION C MAY BE LEFT IN PLACE SUBJECT TO THE FOLLOWING CONDITIONS:

   A.) THERE IS NO PRYING ACTION FROM APPLIED STRESS OR CREVICE CORROSION (SEE NOTE 7) WHICH TENDS TO SEPARATE THE CONNECTED PARTS.

   B.) RIVETS HEADS DO NOT HAVE ADDITIONAL LOSSES DESCRIBED IN NOTE 6.

   C.) RIVETS MAY BE LEFT IN PLACE TO THE EXTENT THAT THEIR NUMBER DOES NOT EXCEED 15% OF CONNECTION RIVETS IN ANY ONE CONNECTION OR 40% OF STITCH RIVETS IN ANY ONE PORTION OF A MEMBER.

   D.) WHERE THE ABOVE PERCENTAGES ARE EXCEEDED THE NUMBER OF RIVETS OVER THE PRESCRIBED PERCENTAGE SHALL BE REPLACED WITH HIGH STRENGTH BOLTS.

   E.) WHEN SELECTING RIVETS FOR REPLACEMENT TO MEET THE ABOVE PERCENTAGE REQUIREMENTS, THE WORST RIVETS IN ANY GROUP OR CONNECTION SHALL BE SELECTED FOR REPLACEMENT.

5. RIVETS (CONDITION D) NOT MEETING THE REQUIREMENTS OF CONDITION C AT EITHER HEAD SHALL BE REPLACED. (CONDITION NOT SHOWN)

6. REPLACEMENT WILL ALSO BE REQUIRED FOR ANY RIVET EXHIBITING ADDITIONAL LOSS IN THE FORM OF PITS OR GOUGES OF THE EDGE OF EITHER HEAD PROJECTING BEYOND THE SHANK WHERE SUCH LOSS REDUCES THE SECTION BELOW THE LIMITS SHOWN FOR CONDITION B.

7. WHERE CREVICE OR INTERFACE CORROSION BETWEEN CONNECTED PARTS IS PRESENT THE RIVETS ADJACENT TO THAT AREA SHALL BE REPLACED AFTER CLEANING BETWEEN THE PARTS REGARDLESS OF THE CONDITION OF THE RIVETS.

8. RIVETS REPLACED IN ACCORDANCE WITH NOTES 2 THROUGH 7 WILL BE PAID FOR UNDER "REPLACE REMOVED OR MISSING RIVETS AND BOLTS WITH HIGH STRENGTH BOLTS".

9. DIMENSIONS SHOWN ON THESE SKETCHES FOR CONDITIONS B AND C ARE MINIMUM REQUIREMENTS FOR BOTH DRIVEN AND MANUFACTURED HEADS. THE MINIMUM HEIGHT OF HEAD IS MEASURED TO THE CENTER OF THE RIVET. THE MINIMUM DIAMETER APPLIES TO THAT DIRECTION IN WHICH IT IS THE SMALLEST.

10. THE SELECTION AND INSTALLATION OF BOLTS SHALL BE IN ACCORDANCE WITH THE SPECIFICATIONS. FOR EACH BOLT IN THESE ITEMS, A MINIMUM OF TWO WASHERS SHALL BE USED, ONE UNDER EACH HEAD AND NUT. THE CONTRACTOR SHALL TAKE ALL NECESSARY FIELD MEASUREMENTS TO DETERMINE PROPER GRIP LENGTHS.

11. RIVETS SHALL BE REMOVED ALTERNATELY, WITH A MAXIMUM OF TEN RIVETS BEING REMOVED AT ONE TIME, SUBJECT TO THE APPROVAL OF THE ENGINEER.

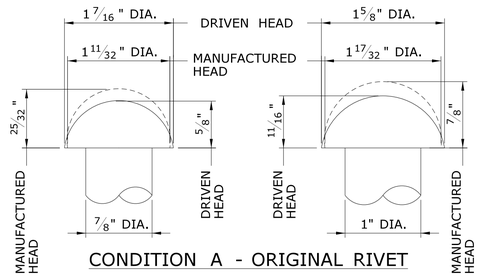

CONDITION A - ORIGINAL RIVET

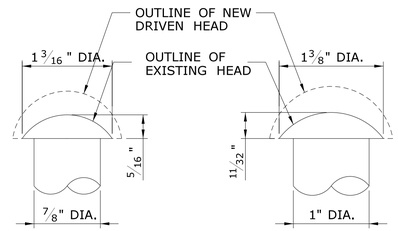

CONDITION B - MINIMUM UNCONDITIONAL ACCEPTANCE

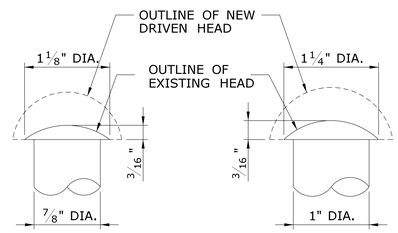

CONDITION C - MINIMUM CONDITIONALLY ACCEPTABLE

RIVET REPLACEMENT CRITERIA

RIVETS REQUIRED FOR PROPOSED REPAIRS					
TYPE OF REPAIR	SPAN 1	SPAN 2	SPAN 3	SPAN 4	# OF RIVETS
BC-1	3	5	6	4	362
BC-2	45	45	55	40	8140
BC-3	2	2	2	1	168
UC-1	4	4	4	4	608
FB-1	9	7	0	9	818
S-1	1	0	0	0	20
S-2	5	0	1	0	162
LB-1	1	0	0	0	34
LB-2	1	1	0	2	60
GP-1	0	2	0	1	84
GP-2	0	1	0	0	64
GP-3	2	1	2	2	140
GP-4	2	2	2	2	80
					10740

NOTE: RIVETS REQUIRED FOR PROPOSED REPAIRS TO BE PAID FOR UNDER ITEM NO. 0603081A - "STRUCTURAL STEEL REPAIRS (SITE NO. 1)"

ADDITIONAL RIVETS TO REPLACE			
SPAN	TRUSS	LOCATION	# OF RIVETS
1	EAST	FB8, TOP FLANGE	28
	WEST	U2	1
	WEST	U5	3
	WEST	L5, LATERAL BRACING DIAGONAL	1
2	WEST	L5	7
	WEST	FB6, TOP FLANGE	1
	WEST	L8	3
3	EAST	U4, HORIZONTAL GUSSET	2
	WEST	FB4, TOP FLANGE	1
	WEST	U1	2
	WEST	U5	2
	WEST	U7	1
4	WEST	L1	3
	WEST	L2	8
	WEST	L5	2
			65

REV.	DATE	REVISION DESCRIPTION	SHEET NO.
-	-	-	-
-	-	-	-
-	-	-	-
-	-	-	-
-	-	-	-
-	-	-	-

THE INFORMATION, INCLUDING ESTIMATED QUANTITIES OF WORK, SHOWN ON THESE SHEETS IS BASED ON LIMITED INVESTIGATIONS BY THE STATE AND IS IN NO WAY WARRANTED TO INDICATE THE CONDITIONS OF ACTUAL QUANTITIES OF WORK WHICH WILL BE REQUIRED.

Plotted Date: $DATE$

DESIGNER/DRAFTER: SS
CHECKED BY: BNK
SCALE AS NOTED

STATE OF CONNECTICUT
DEPARTMENT OF TRANSPORTATION

Filename: $FILEA$

SIGNATURE/BLOCK:
Hardesty & Hanover, LLC
59 Elm Street
New Haven, CT 06510

PROJECT TITLE:
REHABILITATION OF BRIDGE NO. 01343 ROUTE 133 OVER HOUSATONIC RIVER

TOWN: BROOKFIELD/BRIDGEWATER
PROJECT NO. 18-134
DRAWING TITLE: STRUCT STEEL REPAIR DETAILS - 5 RIVET REPLACEMENT
DRAWING NO. S-20
SHEET NO. 05.20

FB-1 REPAIRS							
SPAN	FLOORBEAM	LOCATION	DETERIORATION DIMENSIONS		ESTIMATED REPAIR PLATE DIMENSIONS	ESTIMATED ANGLE LENGTH	DWG. NO.
			L (IN)	W (IN)	LxH (IN)	L (IN)	
1	FB2	E	24	16.5	36x15.5	36	S-12
		W	24	16.5	36x15.5	36	
	FB3	W	12	16.5	24x15.5	24	
	FB4	E	12	16.5	24x15.5	24	
	FB5	E	24	16.5	36x15.5	36	
		W	24	16.5	36x15.5	36	
	FB6	E	24	16.5	36x15.5	36	
		W	24	16.5	36x15.5	36	
	FB8	W	24	16.5	36x15.5	36	
2	FB0	W	24	16.5	36x15.5	36	S-13
	FB1	W	24	16.5	36x15.5	36	
	FB4	W	24	16.5	36x15.5	36	
	FB6	E	8	16.5	20x15.5	20	
	FB7	E	24	16.5	36x15.5	36	
		W	24	16.5	36x15.5	36	
	FB8	W	24	16.5	36x15.5	36	
4	FB2	W	36	16.5	48x15.5	48	S-15
	FB3	E	36	16.5	48x15.5	48	
		W	36	16.5	48x15.5	48	
	FB4	E	36	16.5	48x15.5	48	
		W	36	16.5	48x15.5	48	
	FB5	W	24	16.5	36x15.5	36	
	FB6	E	24	16.5	36x15.5	36	
		W	24	16.5	36x15.5	36	
	FB8	E	24	16.5	36x15.5	36	

BC-1 REPAIRS			
SPAN	TRUSS	NODE	DWG. NO.
1	T1	L3	S-12
		L6	
	T2	L6	
2	T1	L2	S-13
		L4	
		L6	
	T2	L2	
		L6	
3	T1	L2	S-14
		L4	
		L6	
	T2	L2	
		L4	
		L6	
4	T1	L4	S-15
		L6	
	T2	L2	
		L6	

LB-1 REPAIRS				
SPAN	AT NODE	DETERIORATION DIMENSIONS	REPLACEMENT ANGLE LENGTH	DWG. NO.
		L (IN)	L (IN)	
1	U1	54	78	S-12

LB-2 REPAIRS				
SPAN	AT NODE	DETERIORATION DIMENSIONS	REPLACEMENT ANGLE	DWG. NO.
		L (IN)	L (IN)	
1	U2	84	382.5	S-12
2	U2	144	382.5	S-13
4	U3	60	382.5	S-15
4	U5	84	382.5	S-15

S-1 REPAIRS						
SPAN	STRINGER	LOCATION	DETERIORATION DIMENSIONS		ESTIMATED REPAIR PLATE DIMENSIONS	DWG. NO.
			L (IN)	W (IN)	LxH (IN)	
1	S2	FB1-FB2	14	20	26x20	S-12

S-2 REPAIRS							
SPAN	STRINGER	LOCATION	DETERIORATION DIMENSIONS		ESTIMATED REPAIR PLATE DIMENSIONS	ESTIMATED ANGLE LENGTH	DWG. NO.
			L (IN)	W (IN)	LxH (IN)	L (IN)	
1	S2	FB0-FB1	12	4	24x9	24	S-12
	S2	FB2-FB3	96	9	108x9	108	
	S2	FB6-FB7	42	3	54x9	54	
	S6	FB0-FB1	10	5	34x9	34	
	S6	FB1-FB2	6	6	18x9	18	
3	S6	FB5-FB6	48	6	72x9	72	S-14

NOTES:

1. REPAIR PLATE LENGTHS ARE ESTIMATED BASED ON INSPECTION FINDINGS. CONTRACTOR IS TO FIELD VERIFY EXTENT OF DETERIORATION AND PROVIDE REPAIR PLATE EXTENDING 1'-0" BEYOND LIMIT OF DETERIORATION, FOR VERIFICATION BY ENGINEER.
2. SEE DWG NO. S-12 TO S-15 FOR STEEL REPAIR LOCATIONS.
3. SEE DWG NO. S-16 TO S-20 FOR STEEL REPAIR DETAILS.
4. SEE DWG NO. S-03 FOR STRUCTURAL STEEL AND BOLTING REQUIREMENTS.

REV.	DATE	REVISION DESCRIPTION	SHEET NO.
-	-	-	-
-	-	-	-
-	-	-	-
-	-	-	-
-	-	-	-
-	-	-	-

THE INFORMATION, INCLUDING ESTIMATED QUANTITIES OF WORK, SHOWN ON THESE SHEETS IS BASED ON LIMITED INVESTIGATIONS BY THE STATE AND IS IN NO WAY WARRANTED TO INDICATE THE CONDITIONS OF ACTUAL QUANTITIES OF WORK WHICH WILL BE REQUIRED.

Plotted Date: $DATE$

DESIGNER/DRAFTER: SS

CHECKED BY: BNK

SCALE AS NOTED

STATE OF CONNECTICUT
DEPARTMENT OF TRANSPORTATION

Filename: $FILEA$

SIGNATURE/ BLOCK:

Hardesty & Hanover, LLC
59 Elm Street
New Haven, CT 06510

PROJECT TITLE:
REHABILITATION OF BRIDGE NO. 01343 ROUTE 133 OVER HOUSATONIC RIVER

TOWN: BROOKFIELD/BRIDGEWATER

PROJECT NO. 18-134

DRAWING TITLE: STRUCT. STEEL REPAIRS ESTIMATED LENGTHS

DRAWING NO. S-21

SHEET NO. 05.21

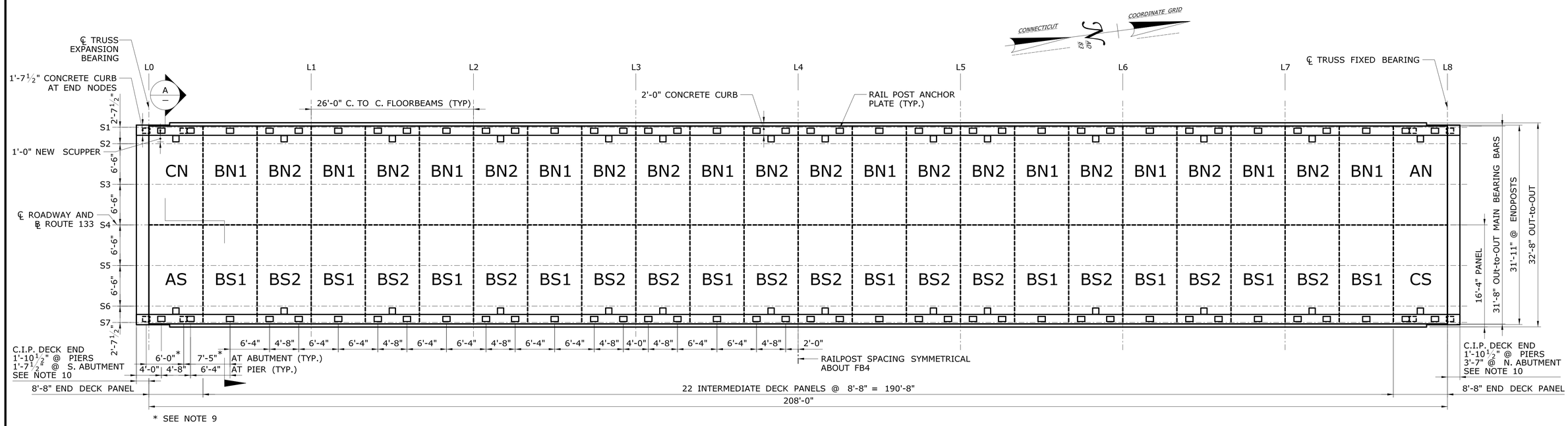

EXODERMIC DECK PANEL PLAN

SCALE: ⅛" = 1'-0"
NOTE: ALL SPANS SIMILAR

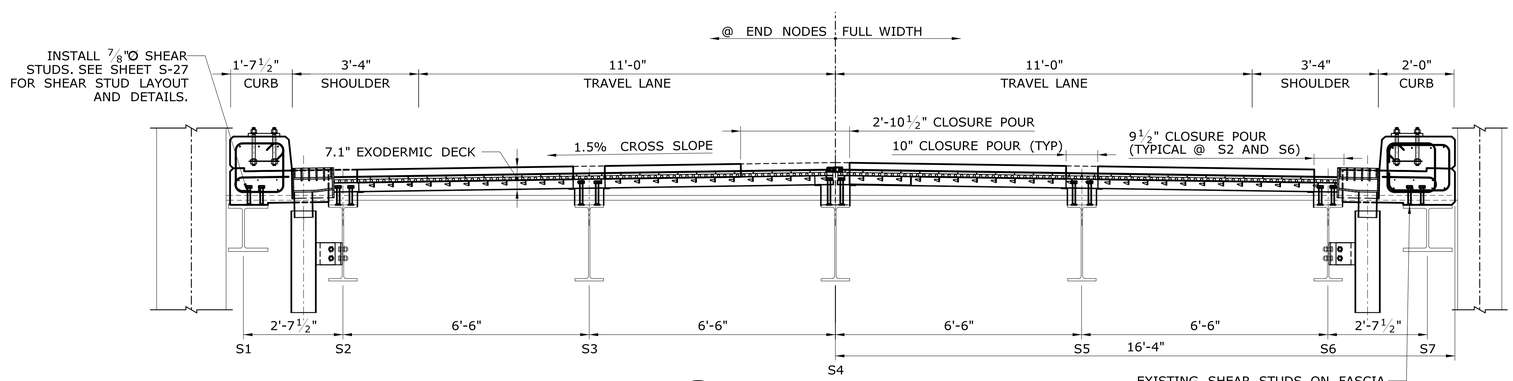

A
-

PARTIAL DECK SECTION

SCALE: ½" = 1'-0"

NOTES:

1. THE CONTRACTOR SHALL DESIGN THE EXODERMIC DECK TO MEET THE REQUIREMENTS SPECIFIED IN THE LASTEST EDITION OF THE AASHTO LRFD BRIDGE DESIGN SPECIFICATIONS (INCLUDING INTERIM SPECIFICATIONS). DESIGN THE DECK TO THE GEOMETRIC REQUIREMENTS, DIMENSIONS, AND LOADING SHOWN ON THE PLANS AND NOTED IN THE SPECIAL PROVISIONS. THE EXODERMIC DECK SHALL BE DESIGNED TO PROVIDE A CAPACITY TO DEMAND (C/D) RATIO OF 1.2 OR GREATER FOR THE HL-93 DESIGN VEHICLE INVENTORY LOAD.
2. THE CONTRACTOR SHALL SUBMIT DETAILED SHOP DRAWINGS AND CALCULATIONS FOR THE DESIGN OF THE EXODERMIC DECK FOR THE REVIEW AND APPROVAL OF THE ENGINEER. CALCULATIONS SHALL BE PREPARED AND SEALED BY A LICENSED PROFESSIONAL ENGINEER IN THE STATE OF CONNECTICUT. THE EXODERMIC DECK SHALL ACHIEVE MINIMUM LOAD RATING FACTORS OF 1.2 FOR AASHTO HL-93 DESIGN VEHICLE LOADS, AND ALL LEGAL, AND PERMIT VEHICLE LOADS INCLUDED IN THE EDITION OF THE CONNECTICUT DEPARTMENT OF TRANSPORTATION BRDIGE LOAD RATING MANUAL (BRLM) THAT IS CURRENT AT THE TIME OF AWARD.
3. THE CONTRACTOR SHALL DEVELOP A DETAILED SEQUENCE OF WORK THAT INCLUDES TASKS TO BE PERFORMED, FORMWORK, LIFTING, HANDLING, AND LEVELING OF THE EXODERMIC PANELS. SUBMIT THE SEQUNCE OF WORK TO THE ENGINEER FOR REVIEW.
4. THE EXODERMIC DECK AND HAUNCHES SHALL NOT EXCEED 77 POUNDS PER SQUARE FOOT IN WEIGHT.
5. A GENERIC GRID SYSTEM IS SHOWN ON THE DRAWINGS. MINOR DEVIATIONS AS MANUFACTURED BY INDIVIDUAL SUPPLIERS, WILL BE CONSIDERED FOR APPROVAL IN THE SHOP DRAWINGS. DETAILS SUGGESTED BY MANUFACTURER TO BE SUBMITTED FOR DEPARTMENT APPROVAL.
6. EXODERMIC DECK PANELS ARE DIMENSIONED TO THE ANTICIPATED LIMITS OF THE PANEL SPLICE JOINTS OR DECK JOINTS. THE CONTRACTOR MAY PROPOSE FABRICATING LARGER PANELS THAN WHAT IS SHOWN IN THESE PLANS. SUBMIT ALL DETAILS OF PROPOSED OPERATION TO DEPARTMENT FOR APPROVAL, INCLUDING SHIPPING METHOD. THE USE OF LARGER PANELS IS CONTINGENT UPON THE DEPARTMENT'S APPROVAL. MINIMUM SPACING OF STEEL GRID AND REINFORCEMENT STEEL SHOWN SHALL BE MAINTAINED.
7. THE DIMENSIONAL TOLERANCES FOR EACH STEEL GRID PANEL SHALL BE IN ACCORDANCE WITH THE CURRENT PUBLISHED STANDARDS OF THE BRIDGE GRID FLOORING MANUFACTURERS ASSOCIATION.
8. SCUPPERS SHALL BE SET ¾" HIGH IN PRECAST CONCRETE DECK SO THAT THEY ARE FLUSH WITH THE TOP SURFACE OF THE OVERLAY.
9. AN INDEPENDENT PREFIT SHALL BE REQUIRED AT THE PLANT.
10. A MANUFACTURERS REPRESENTATIVE SHALL BE PRESENT DURING PANEL INSTALLATION AS DETERMINED BY THE ENGINEER.
11. SEE DWG NO. S-23 THROUGH S-25 FOR PANEL LAYOUT DETAILS.
12. RAIL POST ANCHOR PLATE SPACING FOR PANELS AT ABUTMENTS VARIES FROM THOSE AT PIERS.
13. CAST-IN-PLACE DECK END VARIES BY LOCATION. SEE DWG. NO. S-08 TO S-10 FOR DETAILS.
14. PRECAST EXODERMIC DECK PANELS, SHEAR STUDS, CURBS, #5 MECHANICAL COUPLERS, CLOSURE POURS AND CAST-IN-PLACE CONCRETE AT DECK ENDS ARE TO BE PAID FOR AS ITEM NO. 0601999A - "EXODERMIC DECK".
15. SEE DWG. NO S-08 FOR PROPOSED DECK JOINT SECTION AT PIERS AND DWG. NO. S-09 FOR PROPOSED DECK JOINT SYSTEMS AT NORTH AND SOUTH ABUTMENT.

SUGGESTED PRECAST EXODERMIC DECK PANEL INSTALLATION SEQUENCE

1. PREPARE ALL SURFACES IN ACCORDANCE WITH THE SPECIFICATIONS.
2. FORM HAUNCHES BETWEEN THE BOTTOM OF EXODERMIC PANEL AND TOP OF STRINGERS AND FLOORBEAMS.
3. FULLY EXTEND LEVELLING BOLTS TO PREVENT PANEL WEIGHT FROM BEING TRANSFERRED TO THE HAUNCH FORMS.
4. INSTALL HAUNCH REINFORCEMENT ON TOP OF STRINGERS WHERE REQUIRED.
5. PLACE PRECAST EXODERMIC PANEL.
6. INSTALL SHEAR CONNECTORS ON STRINGERS AS SPECIFIED.
7. ADJUST LEVELING DEVICES TO BRING PANEL TO CORRECT GRADE AND ELEVATION. ENSURE THAT THERE ARE NO GAPS IN HAUNCH FORM.
8. INSTALL AND SPLICE REBAR FOR CURBS.
9. INSTALL FORMS FOR CURBS AND CLOSURE POURS. INSTALL ANCHOR PLATES FOR RAILING.
10. AFTER PLACING PANELS OVER ENTIRE SPAN, PLACE EARLY HIGH STRENGTH CONCRETE AT PANEL SPLICES AND CURBS. HIGH EARLY STRENGTH CONCRETE FOR CLOSURE POURS AND CURBS TO BE PAID FOR AS ITEM NO. 0601999A - "EXODERMIC DECK".

REV.	DATE	REVISION DESCRIPTION	SHEET NO.
-	-	-	-
-	-	-	-
-	-	-	-
-	-	-	-
-	-	-	-
-	-	-	-

THE INFORMATION, INCLUDING ESTIMATED QUANTITIES OF WORK, SHOWN ON THESE SHEETS IS BASED ON LIMITED INVESTIGATIONS BY THE STATE AND IS IN NO WAY WARRANTED TO INDICATE THE CONDITIONS OF ACTUAL QUANTITIES OF WORK WHICH WILL BE REQUIRED.

Plotted Date: 8/28/2018

DESIGNER/DRAFTER: MRS
CHECKED BY: BNK
SCALE AS NOTED

STATE OF CONNECTICUT
DEPARTMENT OF TRANSPORTATION

Filename: ...\SB_MSH_BR01343_018_134_FD_Deck_Plan.dgn

SIGNATURE/BLOCK:
Hardesty & Hanover, LLC
59 Elm Street
New Haven, CT 06510
Hardesty &Hanover

PROJECT TITLE:
REHABILITATION OF BRIDGE NO. 01343 ROUTE 133 OVER HOUSATONIC RIVER

TOWN: BROOKFIELD/BRIDGEWATER
PROJECT NO. 18-134
DRAWING TITLE: DECK PLAN - PANEL LAYOUT
DRAWING NO. S-22
SHEET NO. 05.22

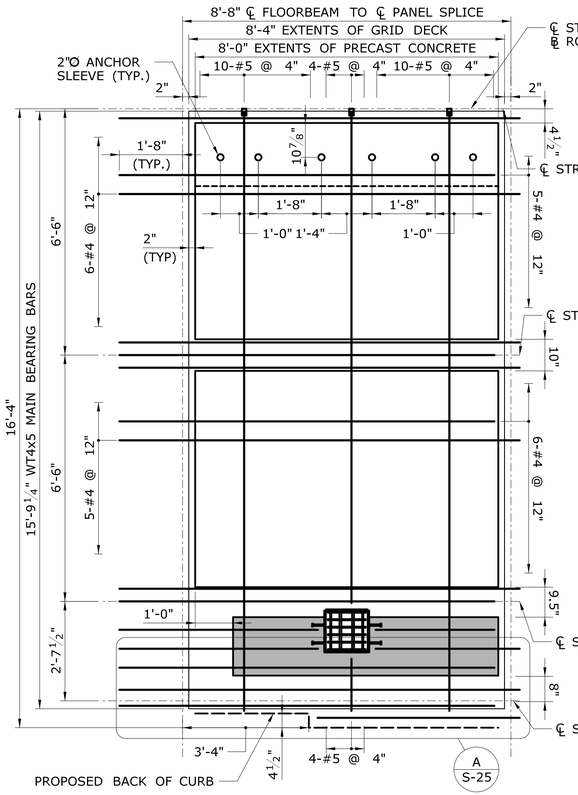

END DECK PANEL TYPE AS

SCALE: 1/2" = 1'-0"

(1 TYPE AS REQUIRED PER SPAN)

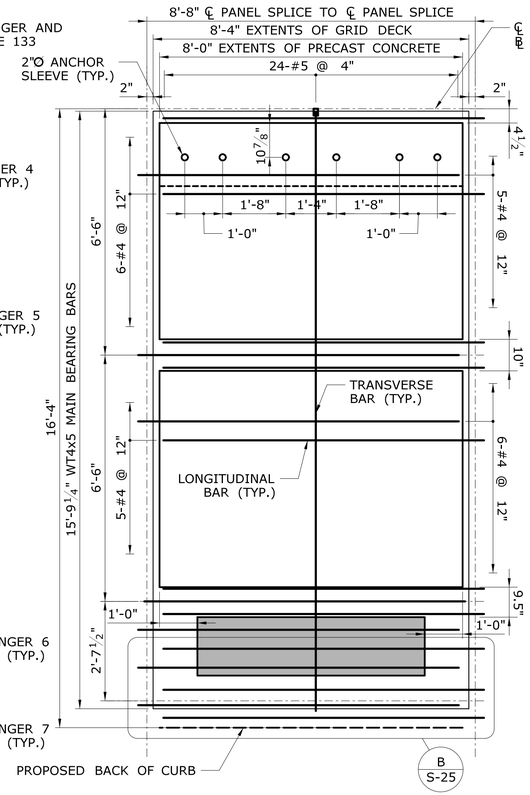

INTERMEDIATE DECK PANEL TYPE BS1

SCALE: 1/2" = 1'-0"

(10 TYPE BS1 REQUIRED PER SPAN)

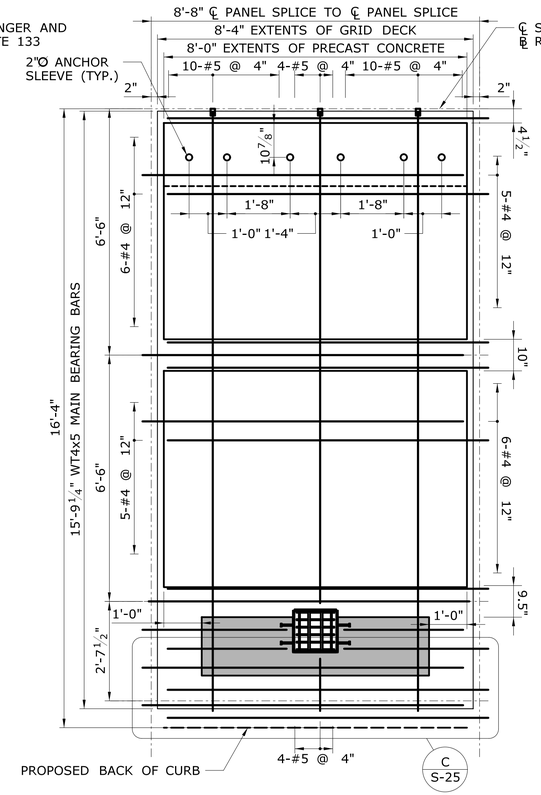

INTERMEDIATE DECK PANEL TYPE BS2

SCALE: 1/2" = 1'-0"

(12 TYPE BS2 REQUIRED PER SPAN)

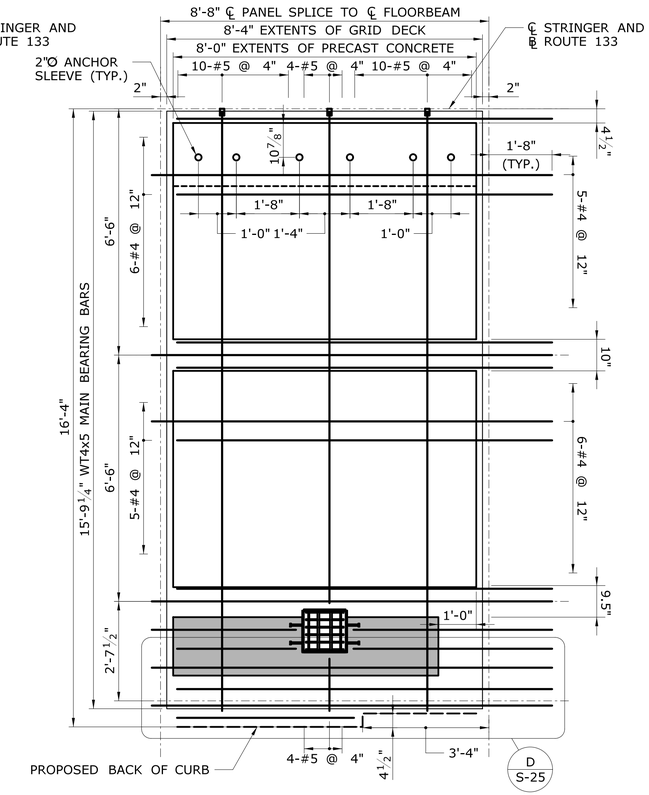

END DECK PANEL TYPE CS

SCALE: 1/2" = 1'-0"

(1 TYPE CS REQUIRED PER SPAN)

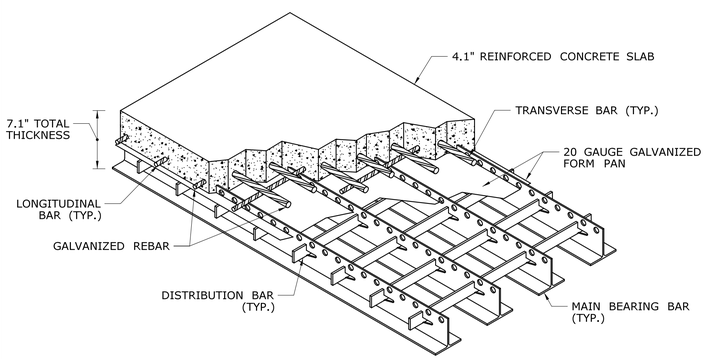

ISOMETRIC VIEW OF EXODERMIC DECK SYSTEM

N.T.S.

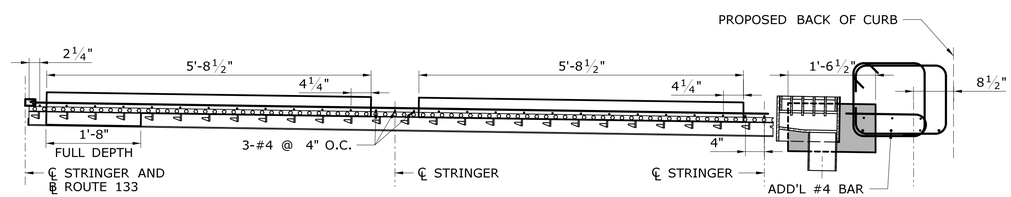

PANEL SECTION AT SCUPPER

SCALE: 3/4" = 1'-0"

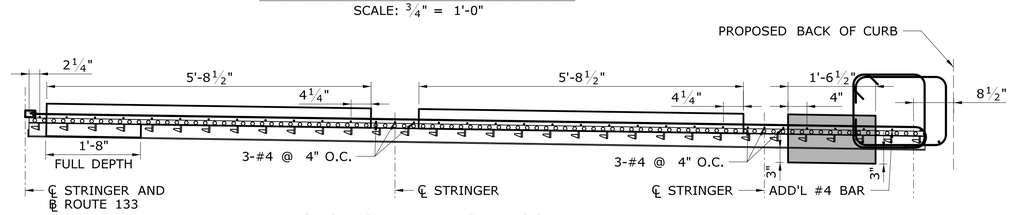

PANEL SECTION WITHOUT SCUPPER

SCALE: 3/4" = 1'-0"

NOTES:

1. ALL REBAR THAT WOULD INTERFERE WITH SCUPPERS SHALL BE CUT TO ALLOW CLEARANCE FOR SCUPPERS.
2. FOR PANEL DESIGNATIONS, SEE DWG. NO. S-22.
3. ALL DECK REINFORCEMENT IS TO BE GALVANIZED UNLESS OTHERWISE NOTED.
4. FOR DETAILS REGARDING CURB REINFORCEMENT, SEE DWG. NO. S-25.
5. ADDITIONAL BARS AT SCUPPERS NOT SHOWN FOR CLARITY. SEE DWG. NO. S-28. SEE DWG. NO. S-30 FOR DECK DRAINAGE OPENING.
6. EXTENT OF GRID DECK MEASURED TO EDGE OF MAIN BEARING BAR FLANGE.
7. CLOSURE POUR CONCRETE SHALL BE PAID FOR UNDER ITEM NO. 0601999A - "EXODERMIC DECK".
8. SEE DWG. NO. S-27 FOR STRINGER HAUNCH REINFORCEMENT.
9. SECTION OF PRECAST EXODERMIC DECK PANEL SHOWN IN GRAY MAY BE ALTERNATIVELY CAST-IN-PLACE DURING DECK CLOSURE POURS.

REV.	DATE	REVISION DESCRIPTION	SHEET NO.
-	-	-	-
-	-	-	-
-	-	-	-
-	-	-	-
-	-	-	-
-	-	-	-

THE INFORMATION, INCLUDING ESTIMATED QUANTITIES OF WORK, SHOWN ON THESE SHEETS IS BASED ON LIMITED INVESTIGATIONS BY THE STATE AND IS IN NO WAY WARRANTED TO INDICATE THE CONDITIONS OF ACTUAL QUANTITIES OF WORK WHICH WILL BE REQUIRED.

Plotted Date: 8/28/2018

DESIGNER/DRAFTER: MRS

CHECKED BY: BNK

SCALE AS NOTED

STATE OF CONNECTICUT
DEPARTMENT OF TRANSPORTATION

Filename: ...\SB_MSH_BR01343_018_134_FD_Panel_Details_1.dgn

SIGNATURE/BLOCK:

Hardesty & Hanover, LLC
59 Elm Street
New Haven, CT 06510

PROJECT TITLE:

REHABILITATION OF BRIDGE NO. 01343 ROUTE 133 OVER HOUSATONIC RIVER

TOWN: **BROOKFIELD/BRIDGEWATER**

DRAWING TITLE: **DECK REPLACEMENT - PANEL DETAILS 1**

PROJECT NO. **18-134**

DRAWING NO. **S-23**

SHEET NO. **05.23**

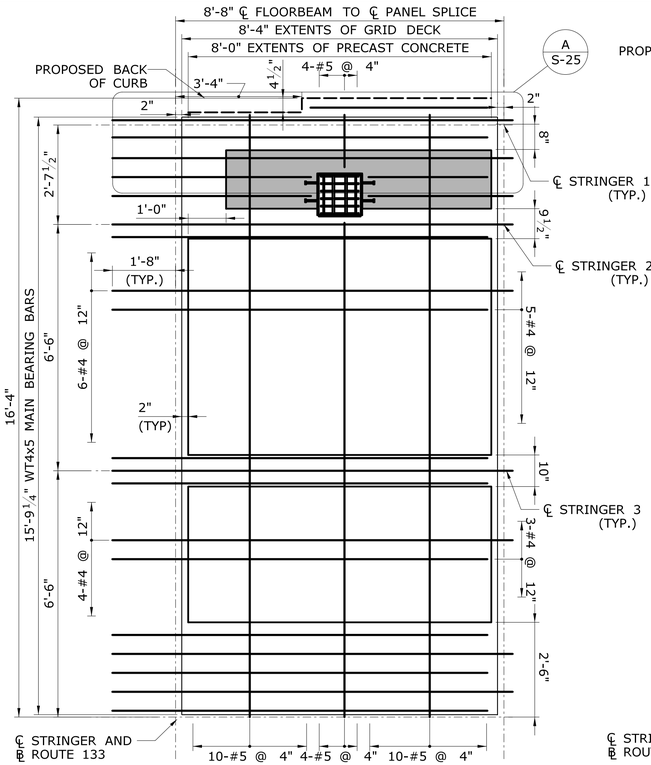

END DECK PANEL TYPE CN

SCALE: ½" = 1'-0"

(1 TYPE CN REQUIRED PER SPAN)

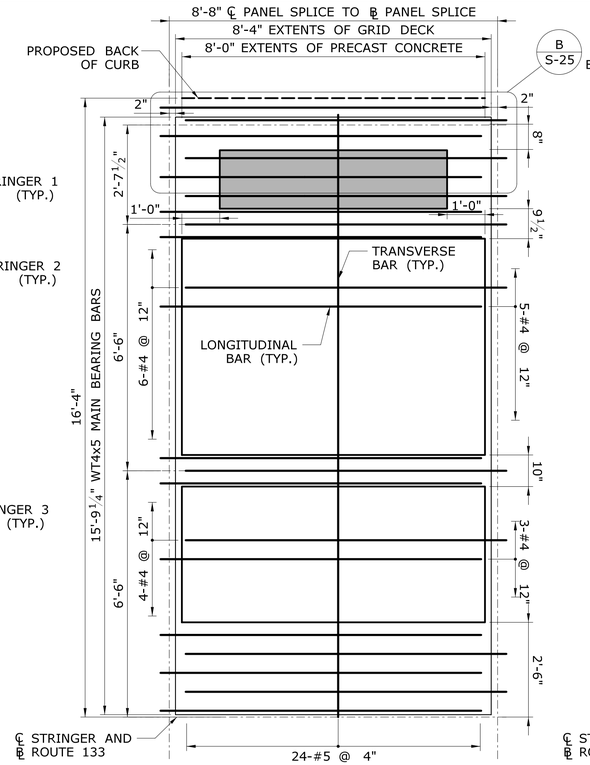

INTERMEDIATE DECK PANEL TYPE BN1

SCALE: ½" = 1'-0"

(10 TYPE BN1 REQUIRED PER SPAN)

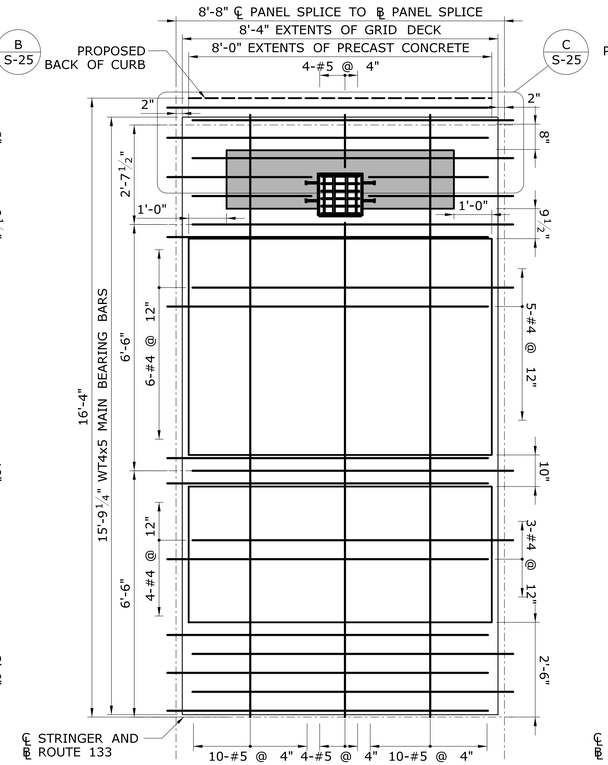

INTERMEDIATE DECK PANEL TYPE BN2

SCALE: ½" = 1'-0"

(12 TYPE BN2 REQUIRED PER SPAN)

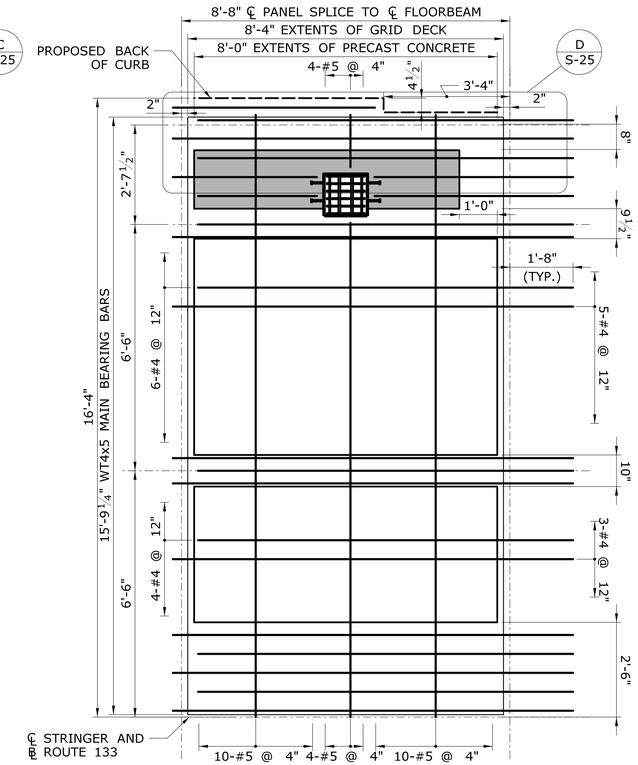

END DECK PANEL TYPE AN

SCALE: ½" = 1'-0"

(1 TYPE AN REQUIRED PER SPAN)

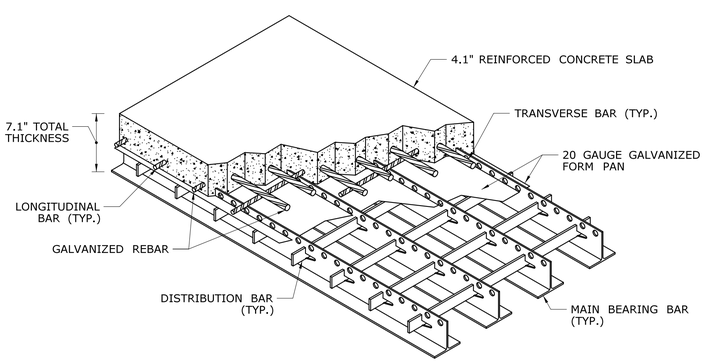

ISOMETRIC VIEW OF EXODERMIC DECK SYSTEM

N.T.S.

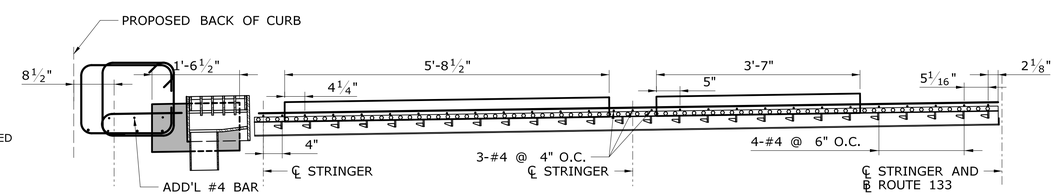

PANEL SECTION AT SCUPPER

SCALE: ¾" = 1'-0"

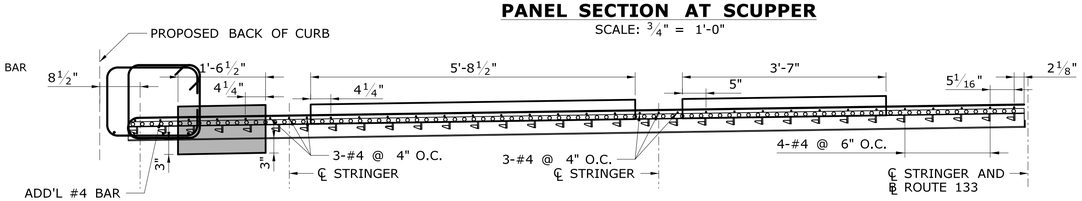

PANEL SECTION WITHOUT SCUPPER

SCALE: ¾" = 1'-0"

NOTES:

1. ALL REBAR THAT WOULD INTERFERE WITH SCUPPERS SHALL BE CUT TO ALLOW CLEARANCE FOR SCUPPERS.
2. FOR PANEL DESIGNATIONS, SEE DWG. NO. S-22.
3. ALL DECK REINFORCEMENT IS TO BE GALVANIZED UNLESS OTHERWISE NOTED.
4. FOR DETAILS REGARDING CURB REINFORCEMENT, SEE DWG. NO. S-25.
5. ADDITIONAL BARS AT SCUPPERS NOT SHOWN FOR CLARITY. SEE DWG. NO. S-28. SEE DWG. NO. S-30 FOR DECK DRAINAGE OPENING.
6. EXTENT OF GRID DECK MEASURED TO EDGE OF MAIN BEARING BAR FLANGE.
7. CLOSURE POUR CONCRETE SHALL BE PAID FOR UNDER ITEM NO. 0601999A - EXODERMIC DECK.
8. SEE DWG. NO. S-27 FOR STRINGER HAUNCH REINFORCEMENT.
9. SECTION OF PRECAST EXODERMIC DECK PANEL SHOWN IN GRAY MAY BE ALTERNATIVELY CAST-IN-PLACE DURING DECK CLOSURE POURS.

REV.	DATE	REVISION DESCRIPTION	SHEET NO.
-	-	-	-
-	-	-	-
-	-	-	-
-	-	-	-
-	-	-	-
-	-	-	-

THE INFORMATION, INCLUDING ESTIMATED QUANTITIES OF WORK, SHOWN ON THESE SHEETS IS BASED ON LIMITED INVESTIGATIONS BY THE STATE AND IS IN NO WAY WARRANTED TO INDICATE THE CONDITIONS OF ACTUAL QUANTITIES OF WORK WHICH WILL BE REQUIRED.

Plotted Date: 8/28/2018

DESIGNER/DRAFTER: MRS

CHECKED BY: BNK

SCALE AS NOTED

STATE OF CONNECTICUT
DEPARTMENT OF TRANSPORTATION

Filename: ...\SB_MSH_BR01343_018_134_FD_Panel_Details_2.dgn

SIGNATURE/BLOCK:

Hardesty & Hanover, LLC
59 Elm Street
New Haven, CT 06510

PROJECT TITLE:

REHABILITATION OF BRIDGE NO. 01343 ROUTE 133 OVER HOUSATONIC RIVER

TOWN: **BROOKFIELD/BRIDGEWATER**

PROJECT NO. **18-134**

DRAWING TITLE: **DECK REPLACEMENT - PANEL DETAILS 2**

DRAWING NO. **S-24**

SHEET NO. **05.24**

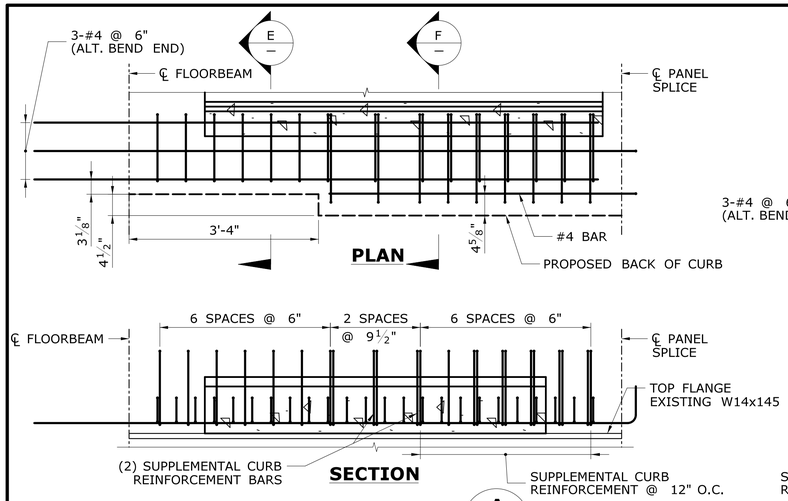

TYPE 'A' PANEL AT PIERS (A / S-23)

SCALE: 3/4"=1'-0"

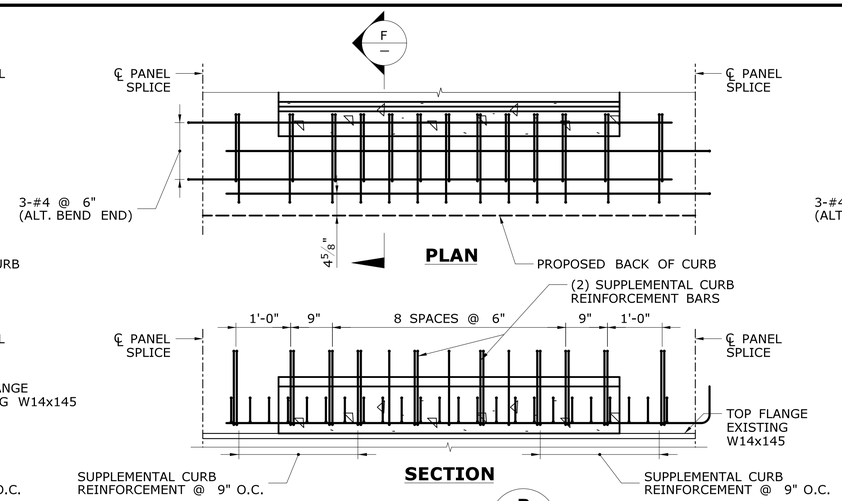

TYPE 'B1' PANEL (B / S-23)

SCALE: 3/4"=1'-0"

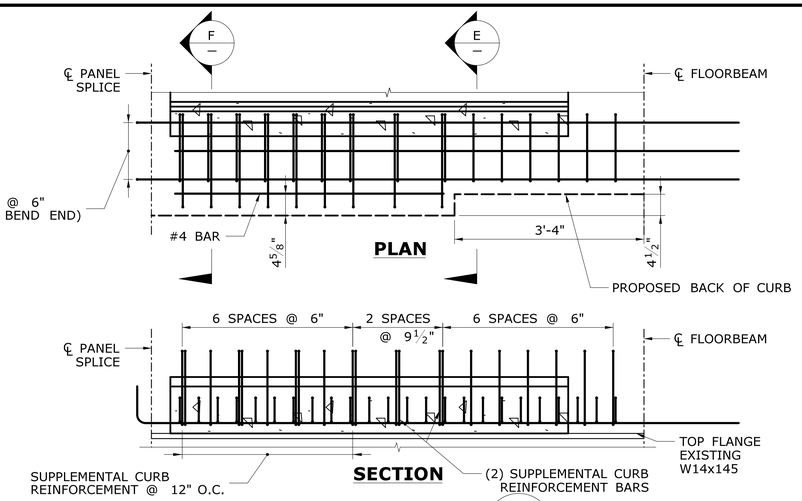

TYPE 'C' PANEL AT PIERS (D / S-23)

SCALE: 3/4"=1'-0"

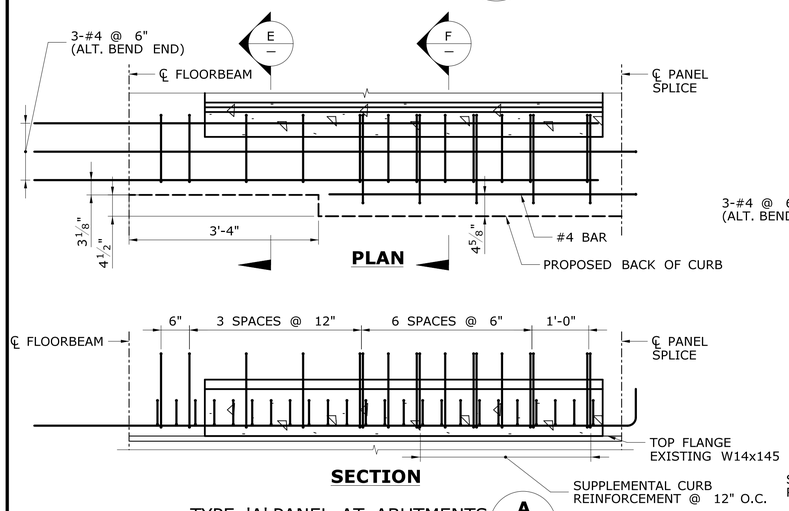

TYPE 'A' PANEL AT ABUTMENTS (A / S-23)

SCALE: 3/4"=1'-0"

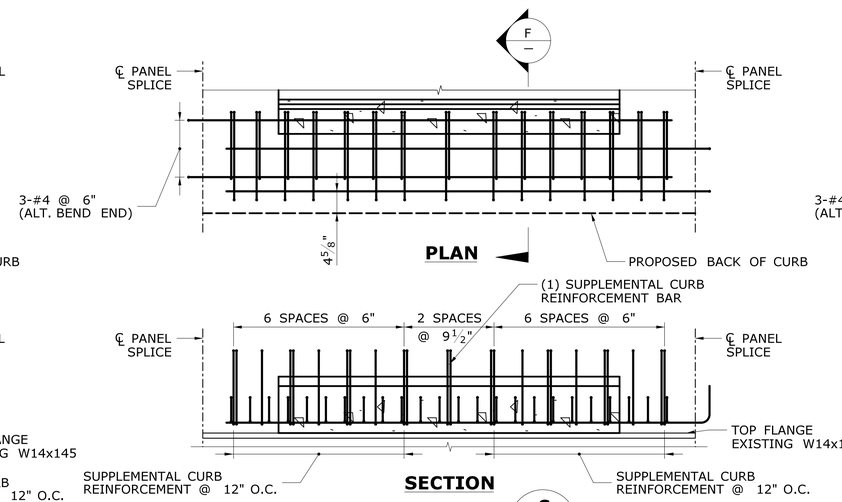

TYPE 'B2' PANEL (C / S-23)

SCALE: 3/4"=1'-0"

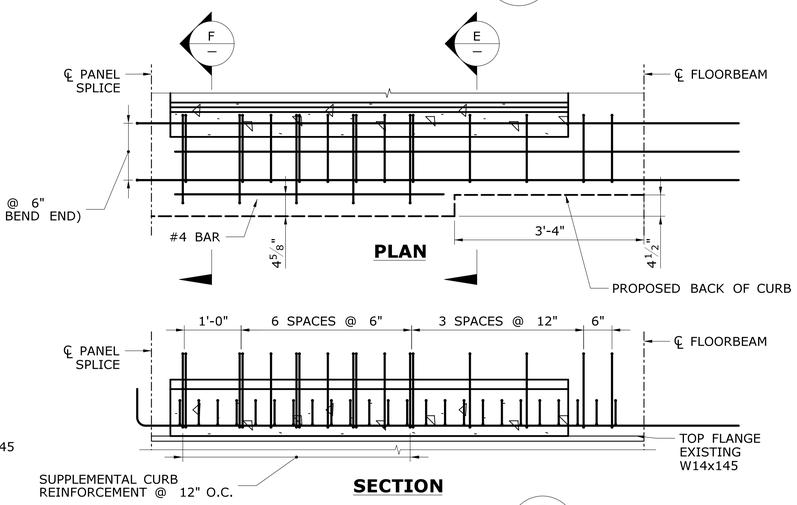

TYPE 'C' PANEL AT ABUTMENTS (D / S-23)

SCALE: 3/4"=1'-0"

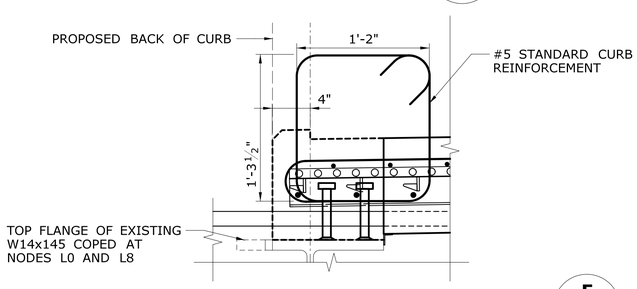

RECESSED CURB SECTION @ NODES L0 AND L8 (E / -)

SCALE: 1 1/2"=1'-0"

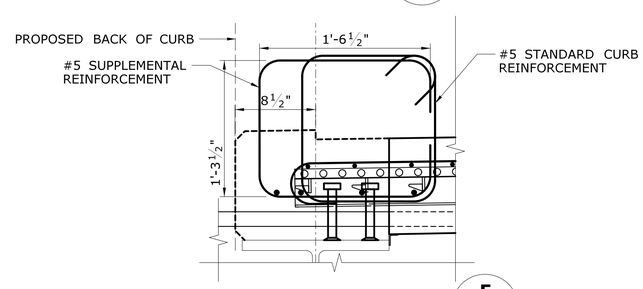

EXPANDED CURB SECTION (F / -)

SCALE: 1 1/2"=1'-0"

REV.	DATE	REVISION DESCRIPTION	SHEET NO.
-	-	-	-
-	-	-	-
-	-	-	-
-	-	-	-
-	-	-	-
-	-	-	-

THE INFORMATION, INCLUDING ESTIMATED QUANTITIES OF WORK, SHOWN ON THESE SHEETS IS BASED ON LIMITED INVESTIGATIONS BY THE STATE AND IS IN NO WAY WARRANTED TO INDICATE THE CONDITIONS OF ACTUAL QUANTITIES OF WORK WHICH WILL BE REQUIRED.

Plotted Date: 8/28/2018

DESIGNER/DRAFTER: MRS

CHECKED BY: BNK

SCALE AS NOTED

STATE OF CONNECTICUT
DEPARTMENT OF TRANSPORTATION

Filename: ...\SB_MSH_BR01343_018_134_FD_Panel_Details_3.dgn

SIGNATURE/BLOCK:

Hardesty & Hanover, LLC
59 Elm Street
New Haven, CT 06510

PROJECT TITLE:

REHABILITATION OF BRIDGE NO. 01343 ROUTE 133 OVER HOUSATONIC RIVER

TOWN: **BROOKFIELD/BRIDGEWATER**

PROJECT NO. **18-134**

DRAWING TITLE: **DECK REPLACEMENT - PANEL DETAILS 3**

DRAWING NO. **S-25**

SHEET NO. **05.25**

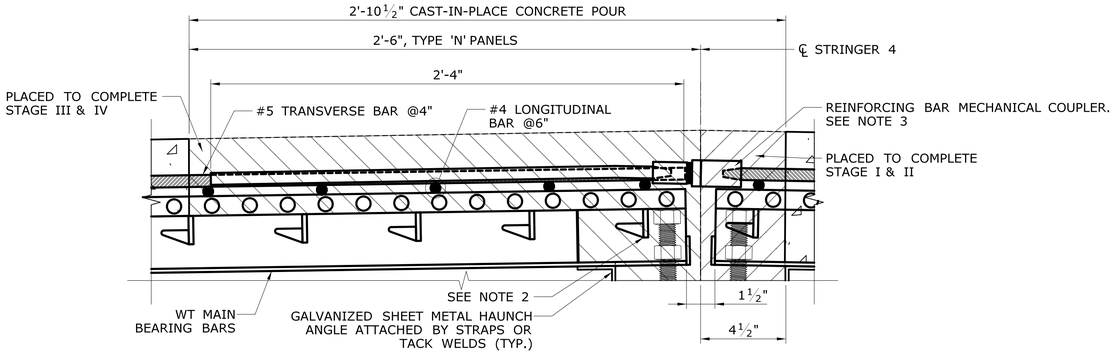

CENTER LONGITUDINAL JOINT

SCALE: 3" = 1'-0"

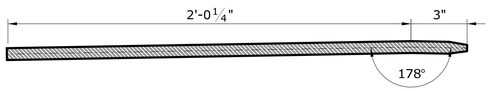

#5 BENT BAR DETAIL

SCALE: 3" = 1'-0"

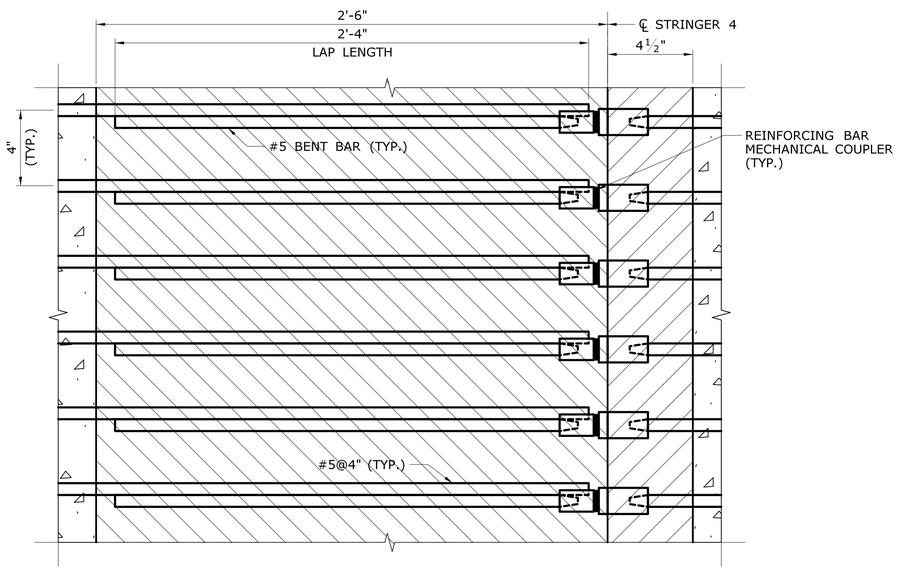

LONGITUDINAL JOINT PLAN

SCALE: 3" = 1'-0"

NOTE: MAIN BEARING BARS AND LONGITUDINAL REINFORCEMENT NOT SHOWN FOR CLARITY.

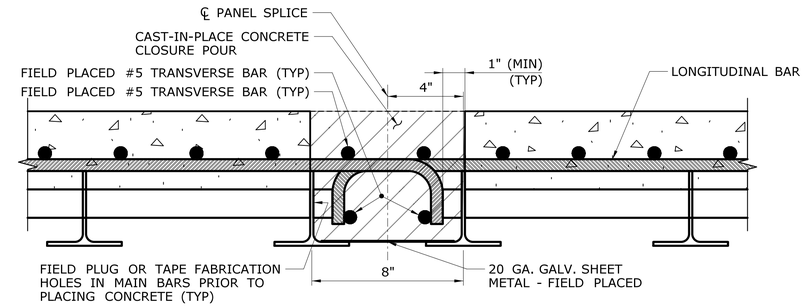

HOOK JOINT BETWEEN PANELS

SCALE: 3" = 1'-0"

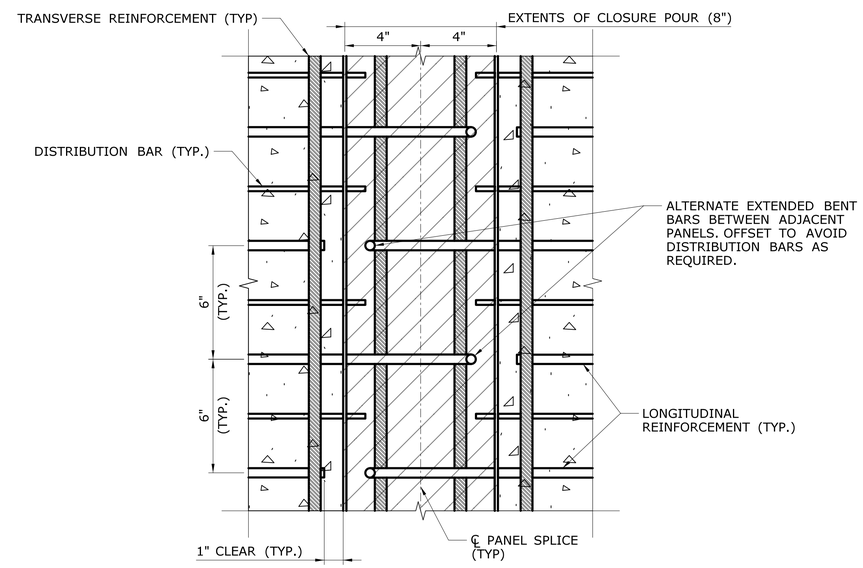

BENT REBAR STAGGERED SPACING PLAN

SCALE: 3" = 1'-0"

LEGEND:

- CAST-IN-PLACE CONCRETE (STAGES I & II)
- CAST-IN-PLACE CONCRETE (STAGES III & IV)
- PRECAST CONCRETE

NOTES:

1. OTHER HAUNCH FORMING OPTIONS ARE POSSIBLE. SUBMIT ALTERNATE DETAILS IN SHOP DRAWINGS.
2. OMIT DISTRIBUTION BARS OVER STRINGERS AS NECESSARY TO PROVIDE CLEARANCE FOR SHEAR STUDS AND LEVELLING BOLTS.
3. MECHANICAL COUPLER MUST BE A 'POSITION TYPE' COUPLER THAT DOES NOT REQUIRE EITHER BAR TO BE ROTATED.
4. HIGH EARLY STRENGTH CONCRETE CLOSURE POURS MUST MEET MINIMUM COMPRESSIVE STRENGTH OF 2500 PSI BEFORE TRAFFIC IS REINTRODUCED.

REV.	DATE	REVISION DESCRIPTION	SHEET NO.
-	-	-	-
-	-	-	-
-	-	-	-
-	-	-	-
-	-	-	-
-	-	-	-

THE INFORMATION, INCLUDING ESTIMATED QUANTITIES OF WORK, SHOWN ON THESE SHEETS IS BASED ON LIMITED INVESTIGATIONS BY THE STATE AND IS IN NO WAY WARRANTED TO INDICATE THE CONDITIONS OF ACTUAL QUANTITIES OF WORK WHICH WILL BE REQUIRED.

Plotted Date: 8/28/2018

DESIGNER/DRAFTER: MRS
CHECKED BY: BNK
SCALE AS NOTED

STATE OF CONNECTICUT
DEPARTMENT OF TRANSPORTATION

Filename: ..\SB_MSH_BR01343_018_134_FD_Deck_Details_1.dgn

SIGNATURE/BLOCK:
Hardesty & Hanover, LLC
59 Elm Street
New Haven, CT 06510

PROJECT TITLE:
REHABILITATION OF BRIDGE NO. 01343 ROUTE 133 OVER HOUSATONIC RIVER

TOWN: BROOKFIELD/BRIDGEWATER
PROJECT NO. 18-134
DRAWING TITLE: DECK REPLACEMENT - DECK DETAILS 1
DRAWING NO. S-26
SHEET NO. 05.26

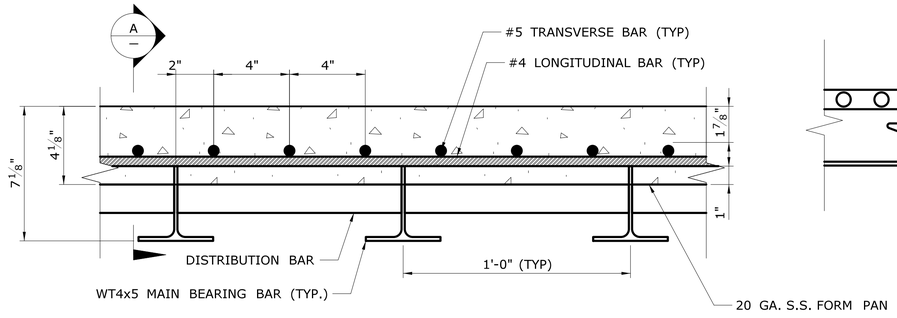

PARTIAL DECK SECTION

SCALE: 3" = 1'-0"

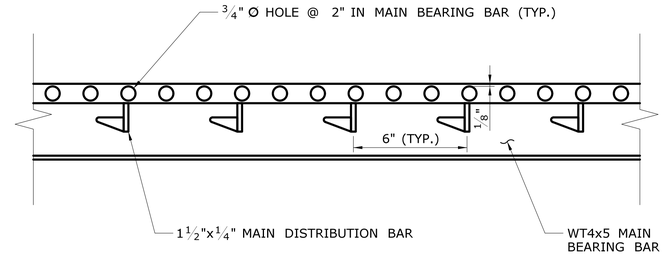

A

MAIN BEARING BAR ELEVATION

SCALE: 3" = 1'-0"

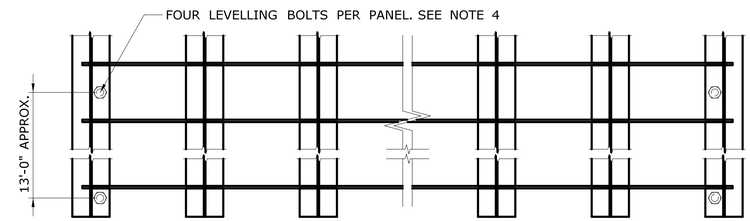

PLAN

SCALE: 1 1/2" = 1'-0"

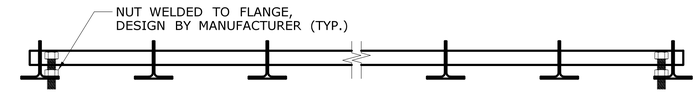

LEVELLING BOLT ELEVATION

SCALE: 1 1/2" = 1'-0"

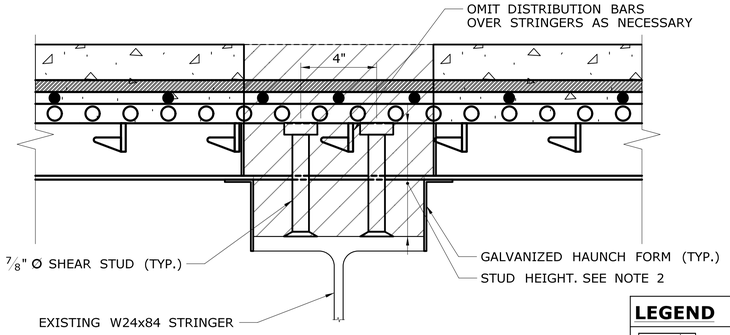

TYPICAL STRINGER CONNECTION

SCALE: 3" = 1'-0"

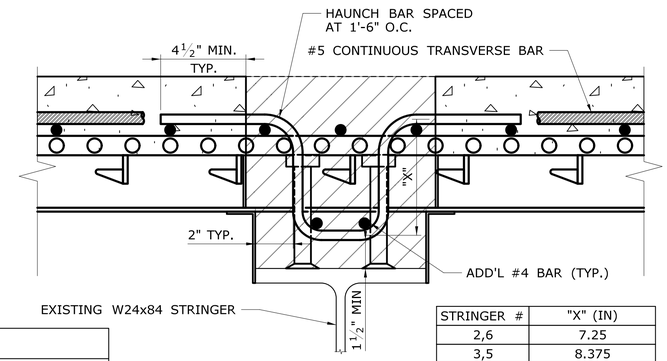

STRINGER #	"X" (IN)
2,6	7.25
3,5	8.375

HAUNCH REINFORCEMENT

SCALE: 3" = 1'-0"

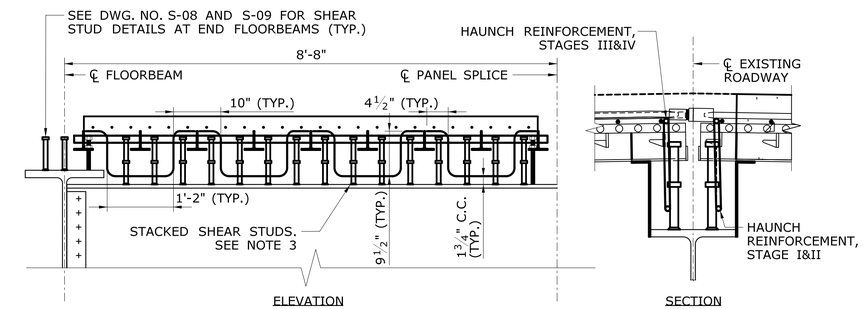

ELEVATION
SCALE: 3/4" = 1'-0"

SECTION
SCALE: 1 1/2" = 1'-0"

HAUNCH REINFORCEMENT AT STRINGER 4

LEGEND

- PRECAST CONCRETE
- CAST-IN-PLACE CONCRETE (DECK)
- CAST-IN-PLACE CONCRETE (CURB)

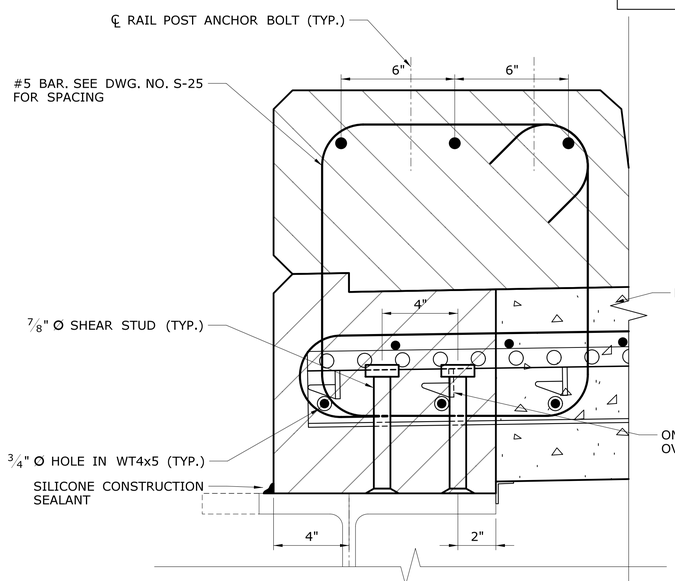

CURB SECTION AT END PORTALS

SCALE: 3" = 1'-0"

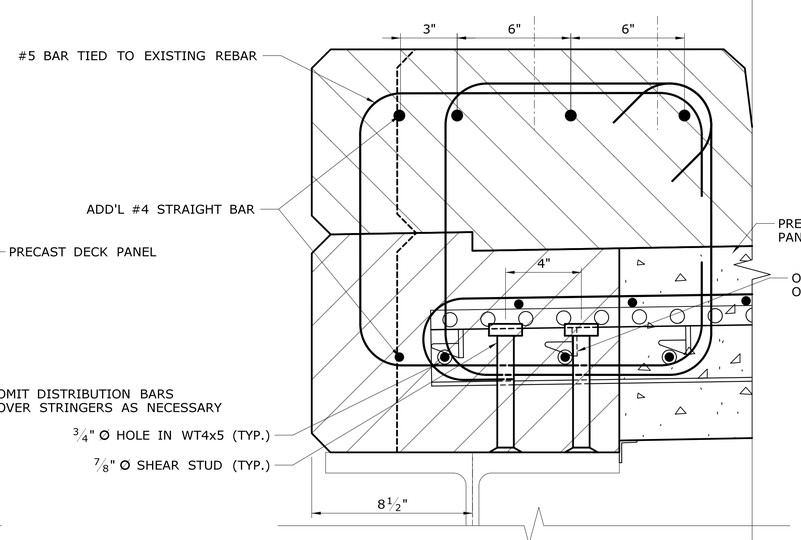

TYPICAL CURB SECTION

SCALE: 3" = 1'-0"

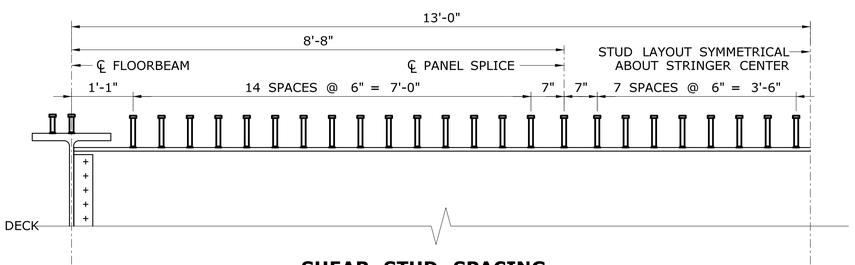

SHEAR STUD SPACING

W24x84 STRINGER SHOWN. W14x145 SIMILAR

SCALE: 3/4" = 1'-0"

NOTES:

1. LEVELLING BOLTS AND NUTS SHALL BE MINIMUM 3/4" DIAMETER ASTM A307 AND A563, RESPECTIVELY.
2. SHEAR STUD HEIGHT SHALL BE BASED ON HAUNCH HEIGHT AS DETERMINED ON DWG. NO. S-29 FOR STRINGERS S-2, S-4, AND S-6. IT IS REQUIRED THAT SHEAR STUDS EXTEND A MINIMUM OF 2" ABOVE BOTTOM OF WT4x5 MAIN BEARING BARS, AND RECOMMENDED THAT 1" OF CLEARANCE BE LEFT BETWEEN TOP OF SHEAR STUDS AND BOTTOM OF DECK REINFORCEMENT. SHEAR STUD HEIGHT FOR STRINGERS S-3 AND S-5 SHALL BE THE AVERAGE HEIGHT OF S-4 AND S-6 (FOR S-5) AND S-2 AND S-4 (FOR S-3), ROUNDED TO THE NEAREST WHOLE INCH. CONTRACTOR SHALL INSTALL SHEAR STUDS AFTER EXODERMIC PANELS ARE INSTALLED.
3. PER CTDOT BRIDGE DESIGN MANUAL, STACKED SHEAR CONNECTORS SHALL BE USED AT THE LOCATIONS WHERE THE HAUNCH DEPTH EXCEEDS SIX INCHES.
4. LEVELLING BOLTS SHALL BE LOCATED ABOVE THE STRINGERS LISTED BELOW:
   TYPE 'S' PANELS: STRINGER S-4, STRINGER S-6
   TYPE 'N' PANELS: STRINGER S-4, STRINGER S-2

REV.	DATE	REVISION DESCRIPTION	SHEET NO.
-	-	-	-
-	-	-	-
-	-	-	-
-	-	-	-
-	-	-	-
-	-	-	-

THE INFORMATION, INCLUDING ESTIMATED QUANTITIES OF WORK, SHOWN ON THESE SHEETS IS BASED ON LIMITED INVESTIGATIONS BY THE STATE AND IS IN NO WAY WARRANTED TO INDICATE THE CONDITIONS OF ACTUAL QUANTITIES OF WORK WHICH WILL BE REQUIRED.

Plotted Date: 8/28/2018

DESIGNER/DRAFTER: MRS
CHECKED BY: BNK
SCALE AS NOTED

STATE OF CONNECTICUT
DEPARTMENT OF TRANSPORTATION

Filename: ..\SB_MSH_BR01343_018_134_FD_Deck_Details_2.dgn

SIGNATURE/BLOCK:

Hardesty & Hanover, LLC
59 Elm Street
New Haven, CT 06510

PROJECT TITLE:
REHABILITATION OF BRIDGE
NO. 01343 ROUTE 133
OVER HOUSATONIC RIVER

TOWN: BROOKFIELD/BRIDGEWATER

DRAWING TITLE: DECK REPLACEMENT - DECK DETAILS 2

PROJECT NO. 18-134

DRAWING NO. S-27

SHEET NO. 05.27

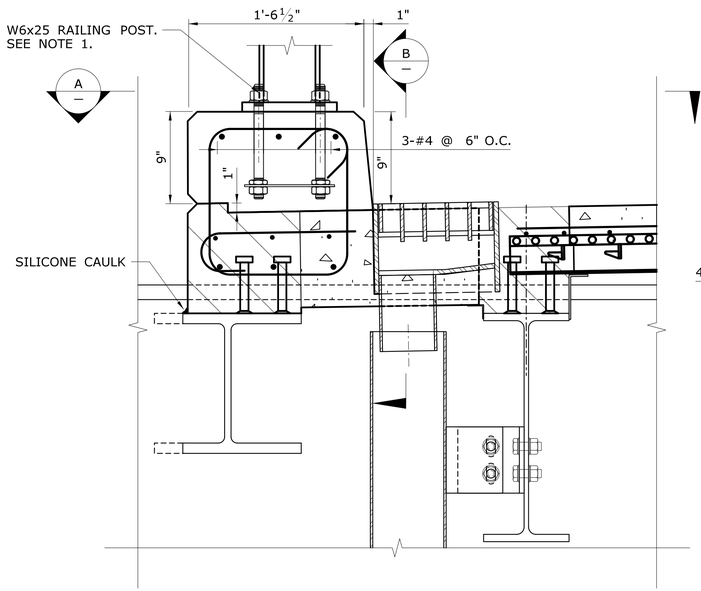

TYPICAL CURB SECTION AT END NODES

SCALE: 1½" = 1'-0"

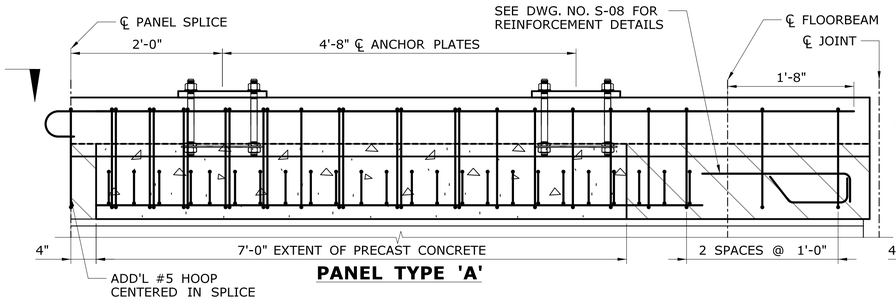

PANEL TYPE 'A'

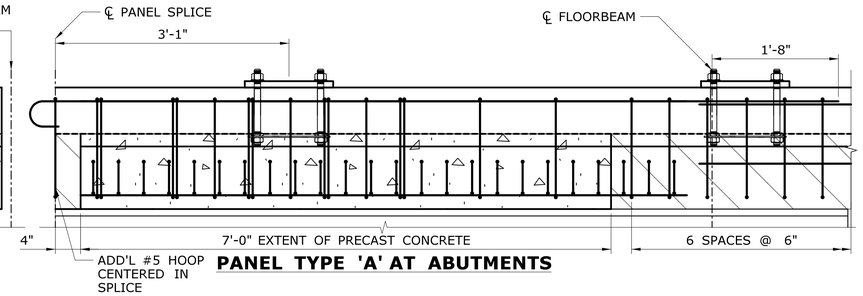

PANEL TYPE 'A' AT ABUTMENTS

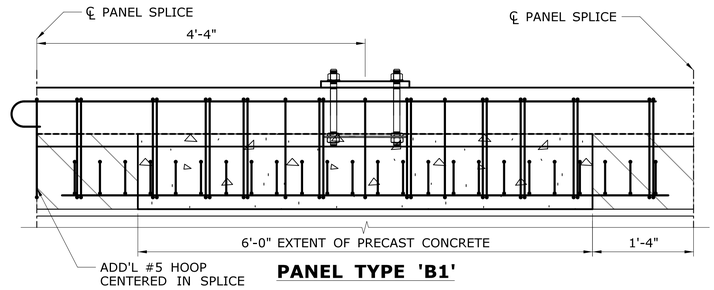

PANEL TYPE 'B1'

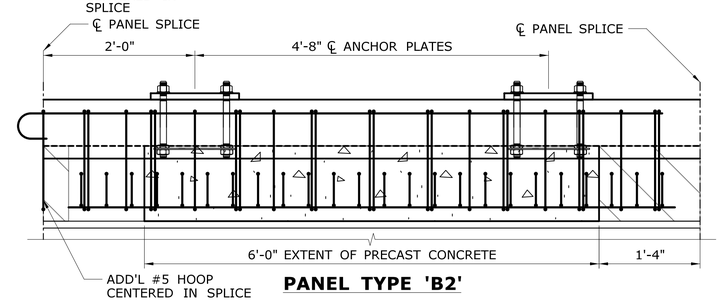

PANEL TYPE 'B2'

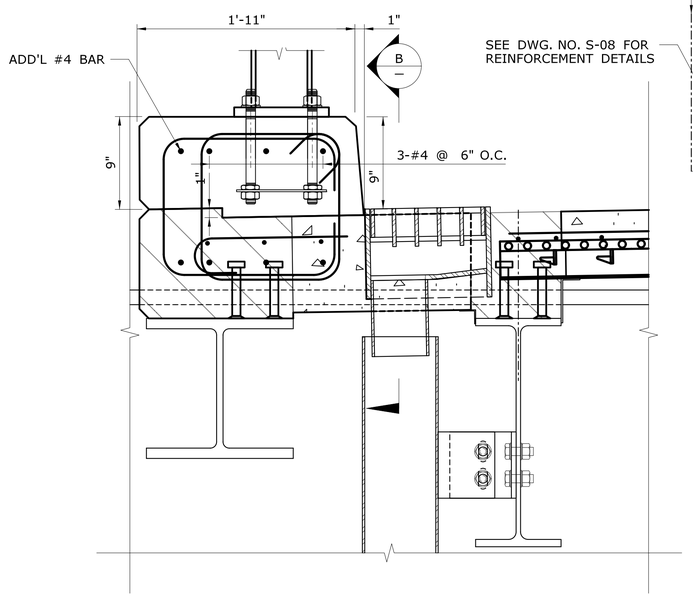

TYPICAL CURB SECTION

SCALE: 1½" = 1'-0"

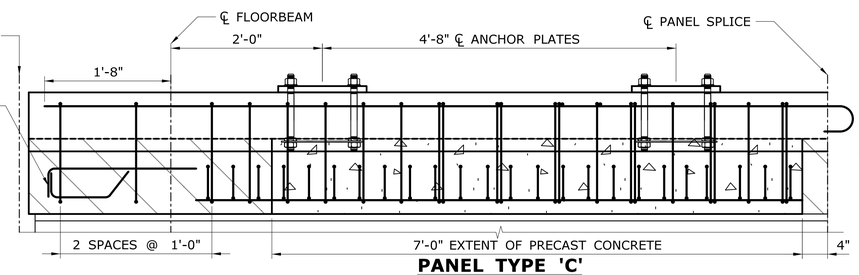

PANEL TYPE 'C'

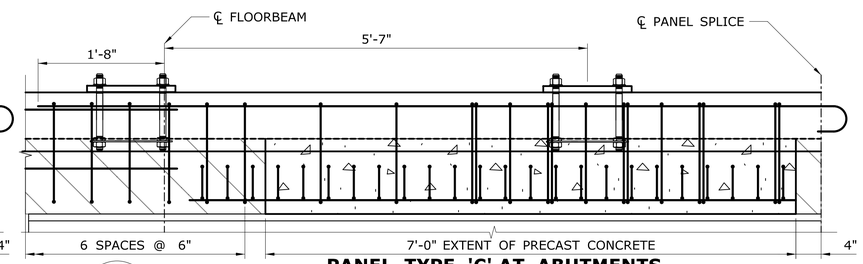

PANEL TYPE 'C' AT ABUTMENTS

TYPICAL CURB ELEVATIONS (B / -)

SCALE: 1" = 1'-0"

NOTE: MAIN BEARING BARS NOT SHOWN FOR CLARITY

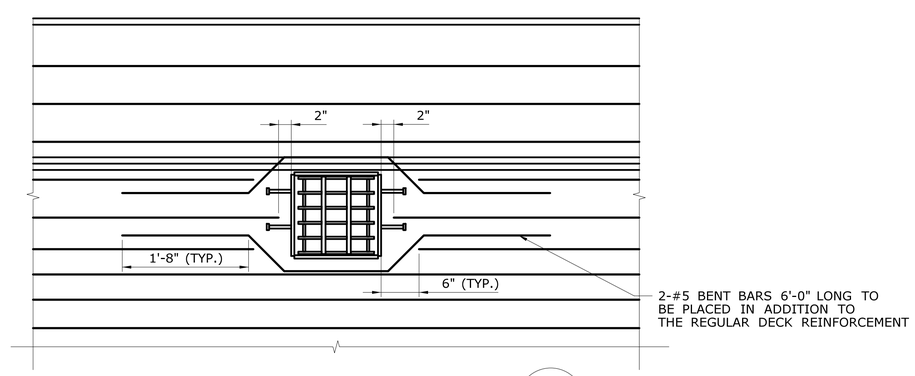

ADDITIONAL REINFORCEMENT AT SCUPPER (A / -)

SCALE: 1" = 1'-0"

NOTE: TRANSVERSE REINFORCING BARS NOT SHOWN FOR CLARITY

LEGEND

- PRECAST CONCRETE
- HES CONCRETE CLOSURE POUR
- HES CONCRETE CURB

NOTES:

1. FOR RAILING DETAILS, SEE DWG. NO S-31 TO S-33.
2. FOR DETAILS REGARDING EXPANSION JOINTS, SEE DWG. NO S-08 AND S-09.
3. CURB TO BE PAID FOR UNDER ITEM NO. 0601999A - EXODERMIC DECK.

REV.	DATE	REVISION DESCRIPTION	SHEET NO.
-	-	-	-
-	-	-	-
-	-	-	-
-	-	-	-
-	-	-	-
-	-	-	-

THE INFORMATION, INCLUDING ESTIMATED QUANTITIES OF WORK, SHOWN ON THESE SHEETS IS BASED ON LIMITED INVESTIGATIONS BY THE STATE AND IS IN NO WAY WARRANTED TO INDICATE THE CONDITIONS OF ACTUAL QUANTITIES OF WORK WHICH WILL BE REQUIRED.

Plotted Date: 8/28/2018

DESIGNER/DRAFTER: MRS

CHECKED BY: BNK

SCALE AS NOTED

STATE OF CONNECTICUT
DEPARTMENT OF TRANSPORTATION

Filename: ...\SB_MSH_BR01343_018_134_FD_Deck_Details_3.dgn

SIGNATURE/ BLOCK:

Hardesty & Hanover, LLC
59 Elm Street
New Haven, CT 06510

PROJECT TITLE:

REHABILITATION OF BRIDGE NO. 01343 ROUTE 133 OVER HOUSATONIC RIVER

TOWN: **BROOKFIELD/BRIDGEWATER**

PROJECT NO. **18-134**

DRAWING TITLE: **DECK REPLACEMENT - DECK DETAILS 3**

DRAWING NO. **S-28**

SHEET NO. **05.28**

	Haunch Table -Stage I & II	FB0	0.33 L0	0.67 L0	FB1	0.33 L1	0.67 L1	FB2	0.33 L2	0.67 L2	FB3	0.33 L3	0.67 L3	FB4	0.33 L4	0.67 L4	FB5	0.33 L5	0.67 L5	FB6	0.33 L6	0.67 L6	FB7	0.33 L7	0.67 L7	FB8
STRINGER 4	A. REQ'D BOTTOM OF WT4X5 ELEVATION	212.511	212.511	212.511	212.511	212.511	212.511	212.511	212.511	212.511	212.511	212.511	212.511	212.511	212.511	212.511	212.511	212.511	212.511	212.511	212.511	212.511	212.511	212.511	212.511	212.511
	B. TOP OF STEEL EL. (FIELD MEASURE)																									
	C. A - B																									
	D. CONCRETE AND SDL DEFLECTION (FT)	0.002	0.008	0.014	0.019	0.023	0.026	0.029	0.031	0.033	0.035	0.036	0.036	0.036	0.036	0.036	0.035	0.033	0.031	0.029	0.026	0.023	0.019	0.014	0.008	0.002
	E. DEPTH OF HAUNCH REQ'D = C + D (FT)																									
STRINGER 6	A. REQ'D BOTTOM OF WT4X5 ELEVATION	212.316	212.316	212.316	212.316	212.316	212.316	212.316	212.316	212.316	212.316	212.316	212.316	212.316	212.316	212.316	212.316	212.316	212.316	212.316	212.316	212.316	212.316	212.316	212.316	212.316
	B. TOP OF STEEL EL. (FIELD MEASURE)																									
	C. A - B																									
	D. CONCRETE AND SDL DEFLECTION (FT)	0.001	0.016	0.025	0.027	0.038	0.044	0.042	0.052	0.056	0.052	0.060	0.060	0.054	0.060	0.060	0.052	0.056	0.052	0.042	0.044	0.038	0.027	0.025	0.016	0.001
	E. DEPTH OF HAUNCH REQ'D = C + D (FT)																									

	Haunch Table -Stage III & IV	FB0	0.33 L0	0.67 L0	FB1	0.33 L1	0.67 L1	FB2	0.33 L2	0.67 L2	FB3	0.33 L3	0.67 L3	FB4	0.33 L4	0.67 L4	FB5	0.33 L5	0.67 L5	FB6	0.33 L6	0.67 L6	FB7	0.33 L7	0.67 L7	FB8
STRINGER 2	A. REQ'D BOTTOM OF WT4X5 ELEVATION	212.316	212.316	212.316	212.316	212.316	212.316	212.316	212.316	212.316	212.316	212.316	212.316	212.316	212.316	212.316	212.316	212.316	212.316	212.316	212.316	212.316	212.316	212.316	212.316	212.316
	B. TOP OF STEEL EL. (FIELD MEASURE)																									
	C. A - B																									
	D. CONCRETE AND SDL DEFLECTION (FT)	0.001	0.017	0.026	0.029	0.041	0.046	0.046	0.056	0.059	0.056	0.064	0.064	0.059	0.064	0.064	0.056	0.059	0.056	0.046	0.046	0.041	0.029	0.026	0.017	0.001
	E. DEPTH OF HAUNCH REQ'D = C + D (FT)																									
STRINGER 4	A. REQ'D BOTTOM OF WT4X5 ELEVATION	212.511	212.511	212.511	212.511	212.511	212.511	212.511	212.511	212.511	212.511	212.511	212.511	212.511	212.511	212.511	212.511	212.511	212.511	212.511	212.511	212.511	212.511	212.511	212.511	212.511
	B. TOP OF STEEL EL. (FIELD MEASURE)																									
	C. A - B																									
	D. CONCRETE AND SDL DEFLECTION (FT)	0.002	0.010	0.017	0.023	0.028	0.031	0.034	0.037	0.040	0.041	0.043	0.043	0.042	0.043	0.043	0.041	0.040	0.037	0.034	0.031	0.028	0.023	0.017	0.010	0.002
	E. DEPTH OF HAUNCH REQ'D = C + D (FT)																									

THE HAUNCH TABLE IS NOT COMPLETE UNTIL THE TOP OF STEEL ELEVATIONS ARE FIELD MEASURED. CONTRACTOR SHALL COMPLETE ONE TABLE FOR EACH SPAN IN EACH CONSTRUCTION STAGE.

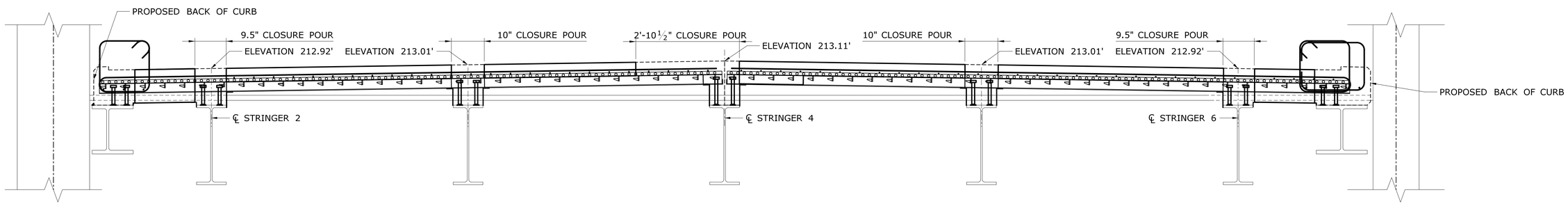

SECTION THROUGH DECK

LOOKING NORTH
SCALE: 1" = 1'-0"
SECTION TYPICAL FOR ALL SPANS

HAUNCH AND PANEL INSTALLATION NOTES:

1. CONTRACTOR SHALL PERFORM FIELD SURVEY OF EXISTING DECK ELEVATIONS BEFORE REMOVAL OF EXISTING DECK AND SHALL PERFORM FIELD SURVEY OF TOP OF STEEL ELEVATIONS FOR EXISTING STRINGERS PRIOR TO INSTALLATION OF EXODERMIC DECK PANELS. CONTRACTOR SHALL SUBMIT HAUNCH CALCULATIONS BASED ON THESE SURVEYS TO THE DEPARTMENT FOR APPROVAL. FIELD SURVEYING SHALL BE PAID FOR AS ITEM NO. 0980001A - "CONSTRUCTION STAKING".
2. PRIOR TO EXODERMIC DECK PANEL INSTALLATION, THE TOP SURFACES OF EXISTING STRINGERS AND EXISTING FLOORBEAMS SHALL BE PREPARED IN ACCORDANCE WITH THE SPECIAL PROVISIONS.
3. PANELS SHALL BE STABILIZED DURING INSTALLATION TO AVOID "WALKING" OF THE PANELS. THE CONTRACTOR SHALL SUBMIT DETAILS OF STABILIZATION TO THE DEPARTMENT FOR APPROVAL.
4. FINAL PANEL ELEVATIONS SHALL BE ATTAINED BY ADJUSTING THE TORQUE ON LEVELING BOLTS TO PROMOTE AN EQUAL DISTRIBUTION OF PANEL DEAD LOAD TO ALL STRINGERS. THE TORQUE SCHEDULE SHALL BE SUBMITTED WITH THE SHOP DRAWINGS FOR THE PANELS. ALL LEVELING BOLTS SHALL BE EQUALLY TORQUED TO APPROXIMATELY THE SAME VALUE WITH NO MORE THAN 10% DEVIATION FROM THE AVERAGE.
5. CONCRETE FOR CLOSURE POURS (LONGITUDINAL AND TRANSVERSE) SHALL BE RODDED OR VIBRATED TO ENSURE THAT ALL VOIDS IN THE TRANSVERSE JOINTS ARE FILLED.
6. CONCRETE DAMS/HAUNCH ANGLES SHALL BE USED TO RETAIN CONCRETE PLACED WITHIN THE HAUNCH ABOVE THE TOP FLANGE OF THE STRINGERS AND FLOORBEAMS. THE PROPOSED METHOD FOR RETAINING HAUNCH CONCRETE SHALL BE SUBMITTED TO THE DEPARTMENT FOR APPROVAL.
7. IF PANELS ARE STACKED FOR STORAGE PRIOR TO FILED INSTALLATION, BLOCKING OR SOME OTHER MEANS FOR CUSHIONING SHALL BE PROVIDED SO THAT THE PANELS DO NOT BEAR ON THE EMBEDDED ANCHOR BOLTS. ALTERNATIVELY, AT THE CONTRACTOR'S OPTION, COUPLING NUTS WHICH CAN DEVELOP A MINIMUM OF 125% OF THE SPECFIED YIELD STRENGTH OF THE ANCHOR BOLTS MAY BE SET FLUSH TO THE TOP OF THE PRECAST CONCRETE TO RECEIVE FIELD PLACED ANCHOR BOLTS AT NO ADDITIONAL COST TO THE STATE.
8. A RIGID LIFTING FRAME SHALL BE USED AND CONCRETE TENSILE STRESSES SHALL BE CONTROLLED DURING HANDLING. SEE SPECIAL PROVISIONS FOR REQUIREMENTS. FOR PANELS CONTAINING SCUPPERS, PANEL LIFTING OPERATIONS THAT ENGAGE A DISCONTINUOUS (CUT) BAR WILL NOT BE PERMITTED.

REV.	DATE	REVISION DESCRIPTION	SHEET NO.
-	-	-	-
-	-	-	-
-	-	-	-
-	-	-	-
-	-	-	-
-	-	-	-

THE INFORMATION, INCLUDING ESTIMATED QUANTITIES OF WORK, SHOWN ON THESE SHEETS IS BASED ON LIMITED INVESTIGATIONS BY THE STATE AND IS IN NO WAY WARRANTED TO INDICATE THE CONDITIONS OF ACTUAL QUANTITIES OF WORK WHICH WILL BE REQUIRED.

Plotted Date: 8/28/2018

DESIGNER/DRAFTER: MRS
CHECKED BY: BNK
SCALE AS NOTED

STATE OF CONNECTICUT
DEPARTMENT OF TRANSPORTATION

Filename: ...\SB_MSH_BR01343_018_134_FD_Haunch_Tables.dgn

SIGNATURE/BLOCK:
Hardesty & Hanover, LLC
59 Elm Street
New Haven, CT 06510

PROJECT TITLE:
REHABILITATION OF BRIDGE NO. 01343 ROUTE 133 OVER HOUSATONIC RIVER

TOWN: BROOKFIELD/BRIDGEWATER
PROJECT NO. 18-134
DRAWING TITLE: HAUNCH TABLES AND TOP OF DECK ELEVATIONS
DRAWING NO. S-29
SHEET NO. 05.29

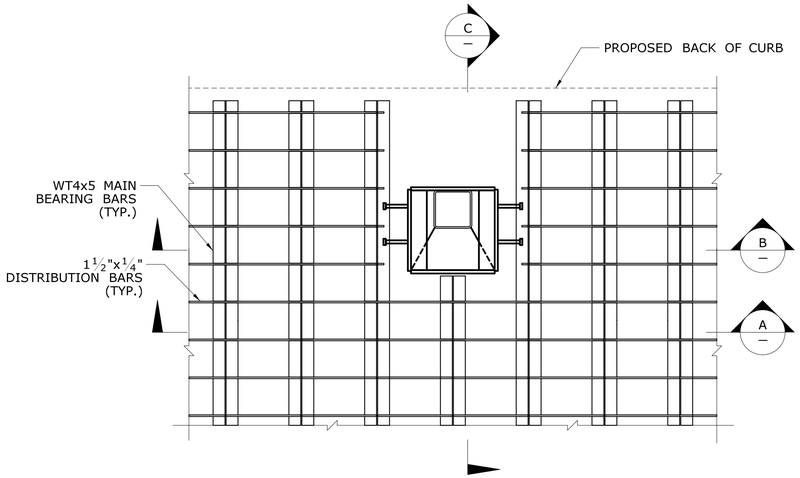

STEEL GRID PLAN AT SCUPPERS

SCALE: 1" = 1'-0"

NOTE: TYPICAL REBAR MAT NOT SHOWN FOR CLARITY

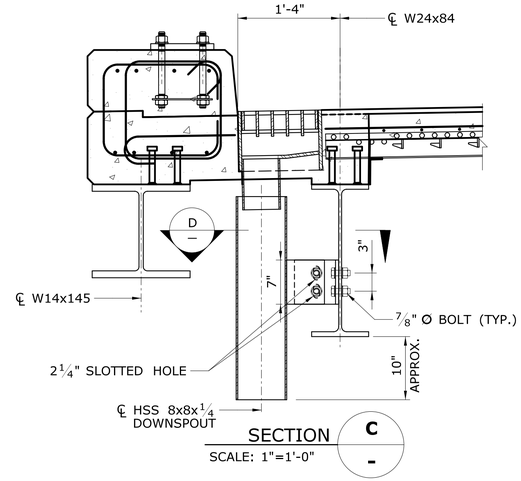

SECTION C

SCALE: 1"=1'-0"

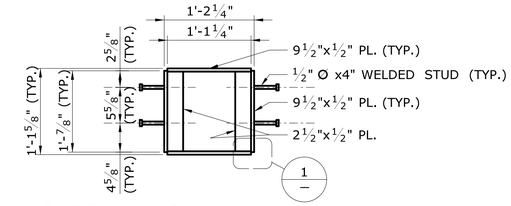

CATCH BASIN FRAME PLAN

SCALE: 1" = 1'-0"

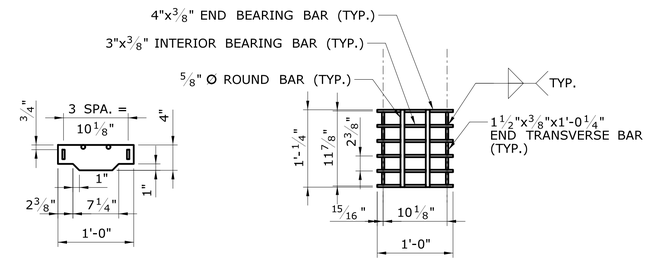

END BEARING BAR

SCALE: 1" = 1'-0"

GRATING PLAN

SCALE: 1" = 1'-0"

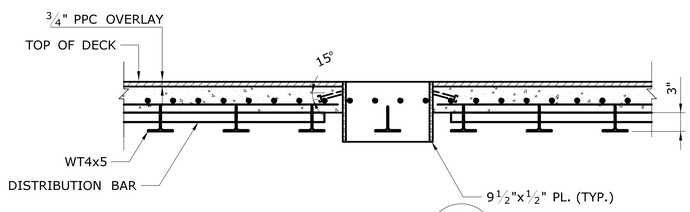

SECTION A

SCALE: 1"=1'-0"

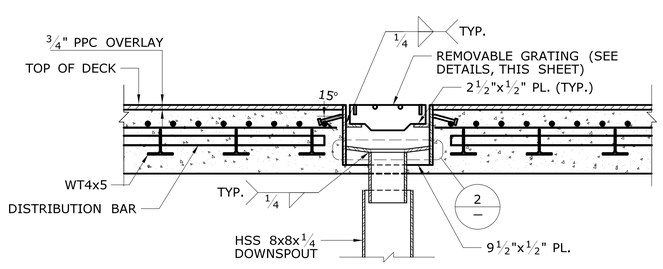

SECTION B

SCALE: 1"=1'-0"

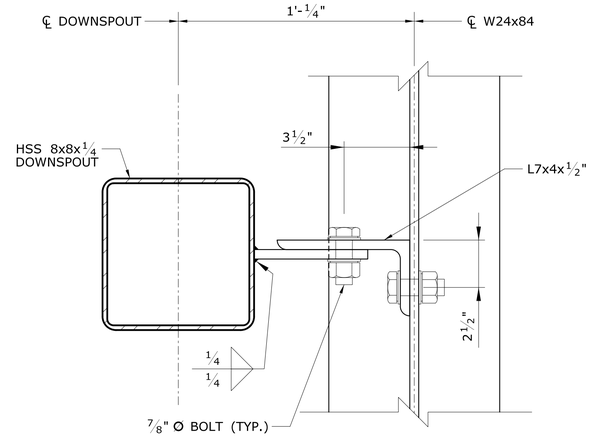

SECTION D

SCALE: 3"=1'-0"

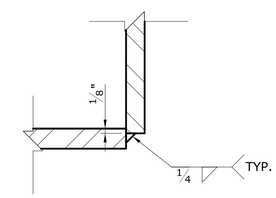

DETAIL 1

N.T.S.

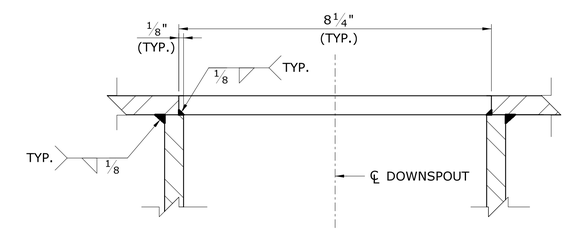

DETAIL 2

N.T.S.

NOTES:

1. CATCH BASIN FRAME DIMENSIONS SHOWN ON THIS SHEET DIFFER FROM THE CTDOT STANDARD CATCH BASIN FRAME DIMENSIONS. ALL DIMENSIONS SPECIFIED ON THIS SHEET SHALL BE USED IN PLACE OF THE CTDOT STANDARDS.
2. ALL MATERIAL, INCLUDING SCUPPERS, DOWN SPOUTS, BRACKETS, AND HARDWARE SHALL BE HOT DIP GALVANIZED AFTER FABRICATION.
3. SCUPPER FRAME, DOWNSPOUT, AND GRATE ARE PAID FOR AS ITEM NO. 0511001A - "BRIDGE SCUPPER".

REV.	DATE	REVISION DESCRIPTION	SHEET NO.
-	-	-	-
-	-	-	-
-	-	-	-
-	-	-	-
-	-	-	-
-	-	-	-

THE INFORMATION, INCLUDING ESTIMATED QUANTITIES OF WORK, SHOWN ON THESE SHEETS IS BASED ON LIMITED INVESTIGATIONS BY THE STATE AND IS IN NO WAY WARRANTED TO INDICATE THE CONDITIONS OF ACTUAL QUANTITIES OF WORK WHICH WILL BE REQUIRED.

Plotted Date: 8/28/2018

DESIGNER/DRAFTER: SS

CHECKED BY: BNK

SCALE AS NOTED

STATE OF CONNECTICUT
DEPARTMENT OF TRANSPORTATION

Filename: ...\SB_MSH_BR01343_018_134_FD_Deck_Drainage_1.dgn

SIGNATURE/BLOCK:

Hardesty & Hanover, LLC
59 Elm Street
New Haven, CT 06510

PROJECT TITLE:

REHABILITATION OF BRIDGE NO. 01343 ROUTE 133 OVER HOUSATONIC RIVER

TOWN: **BROOKFIELD/BRIDGEWATER**

DRAWING TITLE: **BRIDGE DECK DRAINAGE**

PROJECT NO. **18-134**

DRAWING NO. **S-30**

SHEET NO. **05.30**

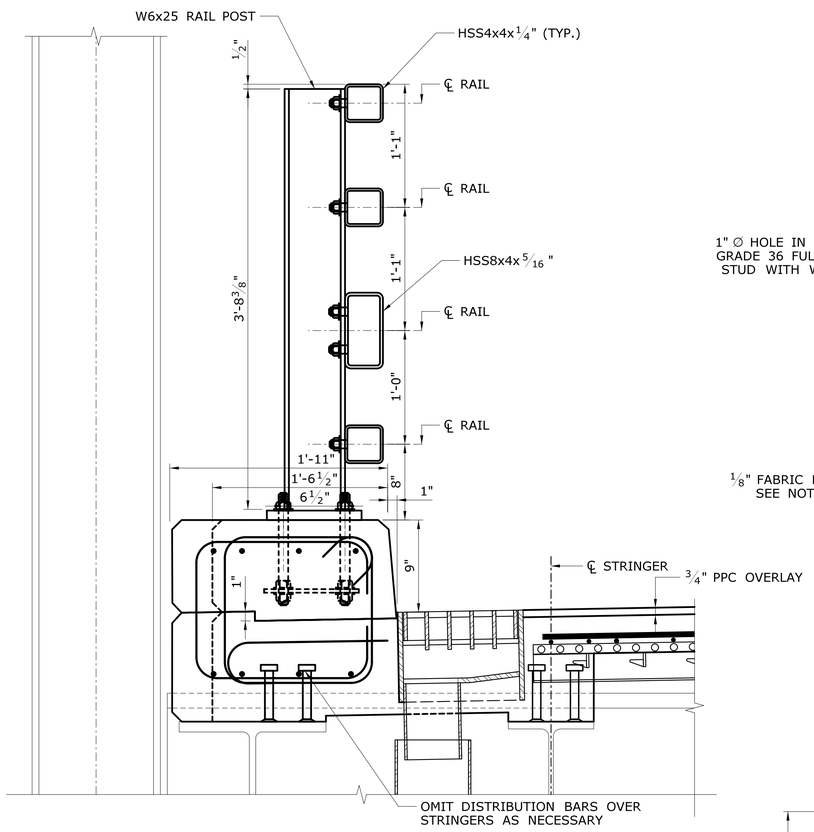

RAILING AND CURB SECTION

SCALE: 1½" = 1'-0"

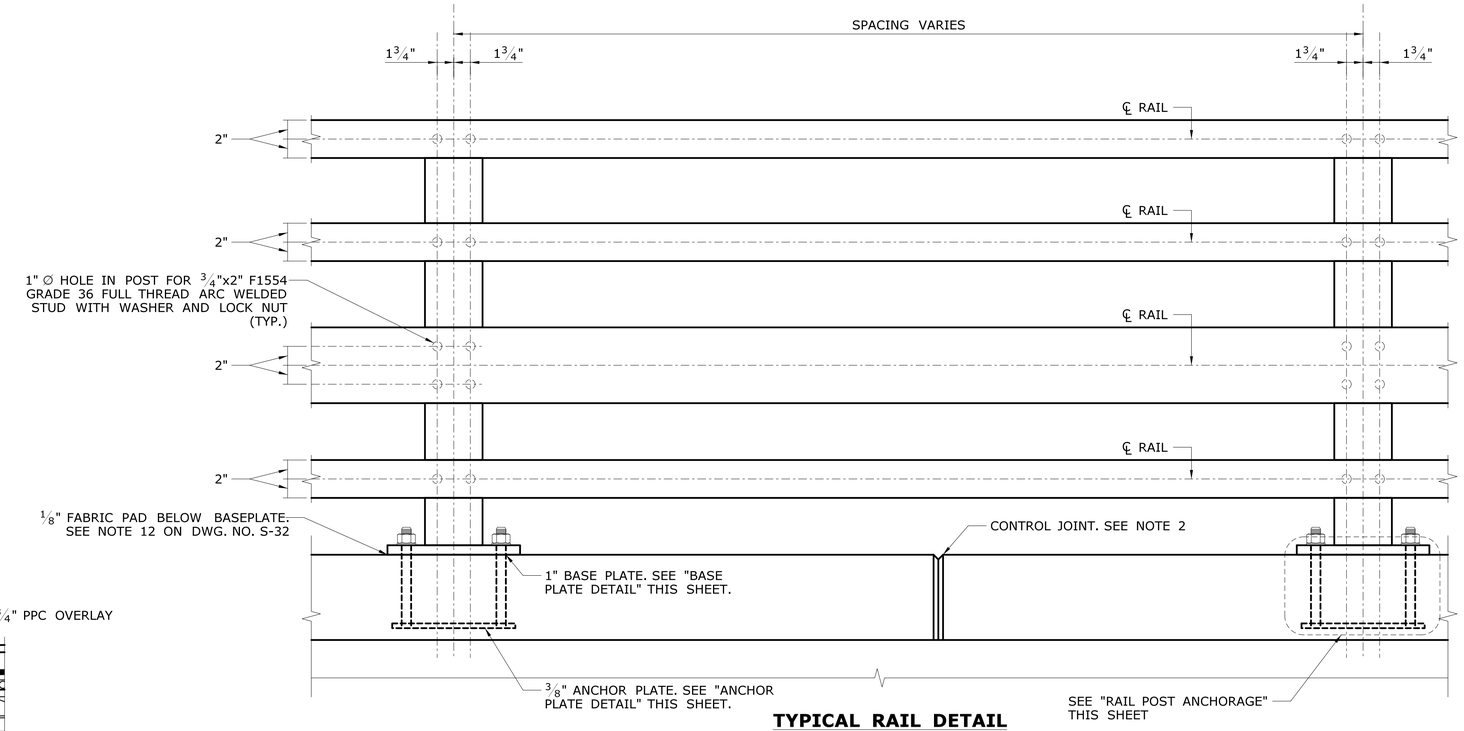

TYPICAL RAIL DETAIL

SCALE: 1½" = 1'-0"

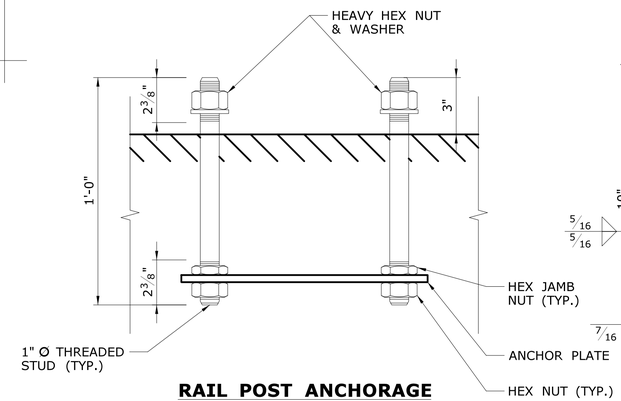

RAIL POST ANCHORAGE

SCALE: 3" = 1'-0"

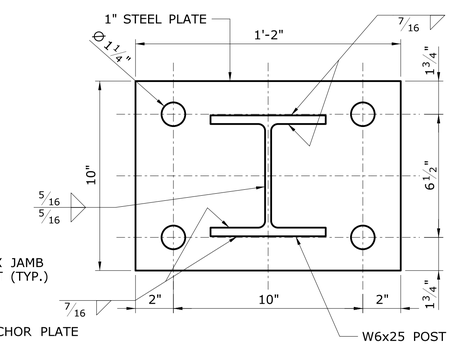

BASE PLATE DETAIL

SCALE: 3" = 1'-0"

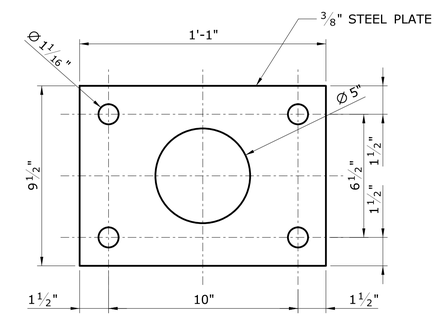

ANCHOR PLATE DETAIL

SCALE: 3" = 1'-0"

NOTES:

1. ALL MATERIAL, INCLUDING RAILS, POSTS AND HARDWARE, SHALL BE HOT DIP GALVANIZED AFTER FABRICATION.
2. PLACE CONTROL JOINTS AT EVEN SPACING ALONG THE LIFT SPAN AT MAXIMUM 20 FOOR INTERVALS, ADJUSTED TO PROVIDE A MINIMUM SPACING OF 12" FROM CENTER OF RAILING POST LOCATIONS.
3. CONTROL JOINTS ARE TO BE ½" DEEP X ½" WIDE V-GROOVE ALONG ALL EXPOSED SURFACES.

REV.	DATE	REVISION DESCRIPTION	SHEET NO.
-	-	-	-
-	-	-	-
-	-	-	-
-	-	-	-
-	-	-	-
-	-	-	-

THE INFORMATION, INCLUDING ESTIMATED QUANTITIES OF WORK, SHOWN ON THESE SHEETS IS BASED ON LIMITED INVESTIGATIONS BY THE STATE AND IS IN NO WAY WARRANTED TO INDICATE THE CONDITIONS OF ACTUAL QUANTITIES OF WORK WHICH WILL BE REQUIRED.

Plotted Date: 8/28/2018

DESIGNER/DRAFTER: **MRS**

CHECKED BY: **BNK**

SCALE AS NOTED

STATE OF CONNECTICUT
DEPARTMENT OF TRANSPORTATION

Filename: ...\SB_MSH_BR01343_018_134_FD_Bridge_Railing_1.dgn

SIGNATURE/ BLOCK:

Hardesty & Hanover, LLC
59 Elm Street
New Haven, CT 06510

PROJECT TITLE:

REHABILITATION OF BRIDGE NO. 01343 ROUTE 133 OVER HOUSATONIC RIVER

TOWN: **BROOKFIELD/BRIDGEWATER**

PROJECT NO. **18-134**

DRAWING TITLE: **BRIDGE RAILING - 1**

DRAWING NO. **S-31**

SHEET NO. **05.31**

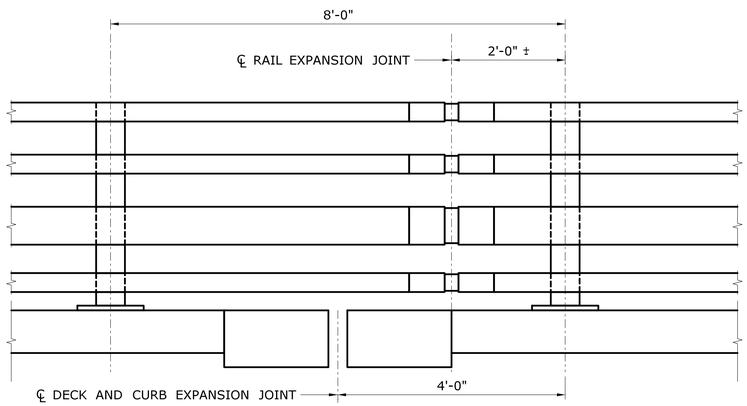

BRIDGE RAILING ELEVATION AT PIERS

(SEE DWG. NO. S-33 FOR ELEVATION AT ABUTMENTS)

SCALE: $^{3}/_{4}$" = 1'-0"

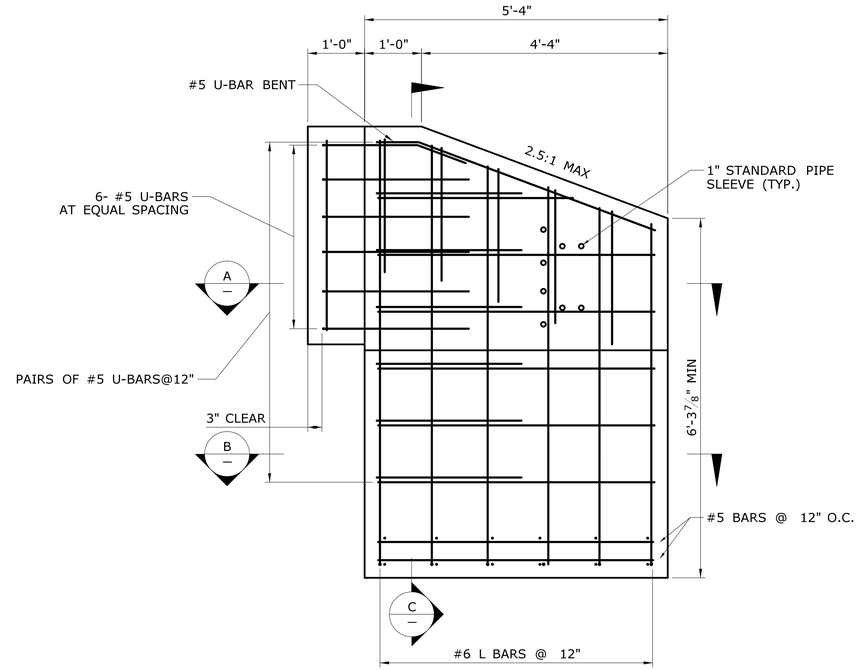

INTERIOR ELEVATION END BLOCK REINFORCEMENT

SCALE: $^{3}/_{4}$" = 1'-0"

NOTE: DECK REINFORCEMENT NOT SHOWN FOR CLARITY

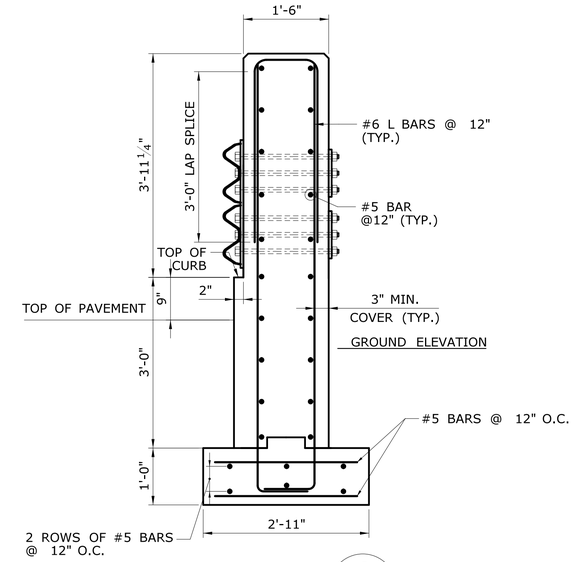

SECTION C

SCALE: $^{3}/_{4}$"=1'-0"

NOTE: DECK REINFORCEMENT NOT SHOWN FOR CLARITY

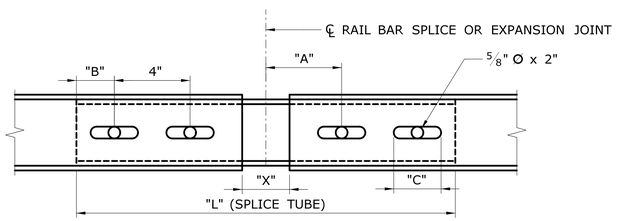

RAIL BAR SPLICE AND EXPANSION JOINT DETAIL

SCALE: 3" = 1'-0"

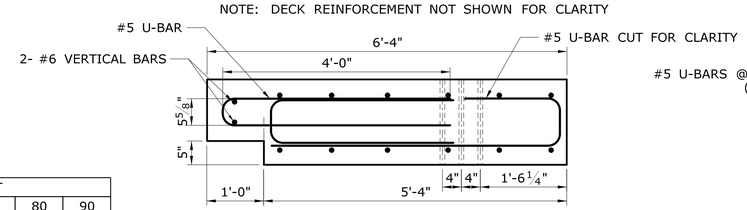

SECTION A

SCALE: $^{3}/_{4}$"=1'-0"

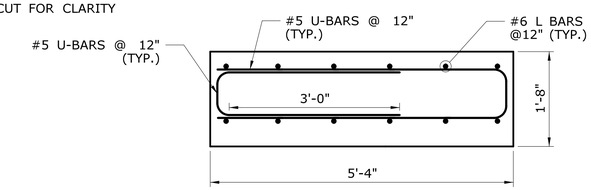

SECTION B

SCALE: $^{3}/_{4}$"=1'-0"

SPLICE AND EXPANSION JOINT TABLE					
"T"	"A"	"B"	"C"	"L"	"X"
SPLICE	4"	2"	--	1'-8"	$^{3}/_{4}$"
EXPANSION JOINT	4"	2"	$2^{1}/_{2}$"	1'-8"	**

** JOINT OPENING "X" CHART						
TEMPERATURE (° F)	40	50	60	70	80	90
"X"	$4^{5}/_{16}$"	$4^{3}/_{16}$"	4"	$3^{13}/_{16}$"	$3^{11}/_{16}$"	$3^{1}/_{2}$"

RAILING NOTES:

1. RAILING DESIGN IS BASED ON NJDOT STANDARD STEEL FOUR-BAR BRIDGE RAILING, WHICH MEETS THE REQUIREMENTS OF TEST LEVEL 4 DESIGN. END BLOCKS ARE DESIGNED TO MEET THE REQUIREMENTS OF TEST LEVEL 4.
2. FABRICATE AND INSPECT THE POST-TO-BASE WELDS IN ACCORDANCE WITH AWS D1.5, BRIDGE WELDING CODE (2015).
3. ENSURE THAT ALL EXPOSED CUT OR SHEARED EDGES ARE ROUNDED AND FREE OF BARBS.
4. SET RAIL POSTS NORMAL TO GRADE UNLESS OTHERWISE SHOWN.
5. ATTACH LENGTHS OF RAIL BAR TO A MINIMUM OF TWO RAIL POSTS AND TO AT LEAST FOUR POSTS WHENEVER POSSIBLE.
6. PROVIDE RAIL BAR EXPANSION JOINTS IN ANY RAIL BAY SPANNING A SUPERSTRUCTURE EXPANSION JOINT. ENSURE THAT EXPANSION JOINT WIDTH IS "X" AND ADJUSTED IN THE FIELD BY THE ENGINEER. REFER TO DETAIL AND TABLE FOR DIMENSION "X".
7. GALVANIZE ALL PARTS AFTER FABRICATION IN ACCORDANCE WITH ASTM A123, EXCEPT THAT HARDWARE TO MEET THE REQUIREMENTS OF EITHER ASTM A153 OR ASTM B695, CLASS 50, TYPE 1. BLAST-CLEAN PARTS EXCEPT FOR HARDWARE PRIOR TO GALVANIZING IN ACCORDANCE WITH SSPC - SP6.
8. SET ANCHOR BOLTS WITH A TEMPLATE AND PLACE SECURELY IN THEIR FINAL POSITION PRIOR TO THE PLACEMENT OF THE EMBEDDING CONCRETE. INSTALL POST ANCHOR ASSEMBLIES TO WITHIN $^{5}/_{16}$ INCH OF THEORHETICAL HORIZONTAL AND VERTICAL LOCATION. ENSURE THAT POST BEARING AREAS ARE DRESSED SMOOTH AND TRUE TO GRADE. PRIOR TO POST ERECTION, FINISH EACH RAIL POST LOCATION TO THE THEORHETICAL ELEVATION DETERMINED FROM PROFILE GRADE, CROSS SLOPE AND CURB HEIGHT UNTIL IT IS WITHIN $^{3}/_{16}$ INCH OF THEORHETICAL ELEVATION, AS MEASURED AT THE TOP OF CONCRETE. USE PREFORMED PADS TO ADJUST THE RAIL POSTS FOR HEIGHT AND ALIGNMENT. ENSURE THAT THE PREFORMED PADS ARE NEOPRENE MEETING THE ELASTOMER PROPERTIES FOR GRADE 0 OR GRADE 2 OF AASHTO M 251. ENSURE THAT THE NUMBER OF PREFORMED PADS SUPPLIED IS 10% IN EXCESS OF THE THEORHETICAL MINIMUM NUMBER REQUIRED. TIGHT NUTS SECURING THE POST BASE PLATE TO A SNUG FIT AND GIVEN AN ADDITIONAL $^{1}/_{8}$ TURN. AFTER ERECTION OF THE RAILING, THE CONTRACTOR MUST CLEAN THE WHOLE ASSEMBLY, TO PRESENT A NEAT AND UNIFORM APPEARANCE.
9. ATTACH RAIL BARS ALTERNATIVELY TO POSTS USING $^{5}/_{8}$" DIA. - ASTM F1554, GRADE 36 OR 50 BOLTS ($^{5}/_{8}$" DIA. - ASTM A307 BOLTS MAY BE SUBSTITUTED) INSERTED THROUGH THE FACE OF THE RAIL BAR. ENSURE THAT BOLTS ARE ROUND OR DOME HEAD AND MAY BE RIB NECK, SLOTTED, WRENCH HEAD OR TENSION CONTROL (TC OR TWIST-OFF). USE $^{1}/_{16}$" LARGER HOLES THAN THE DIAMETER OF THE BOLT IN POSTS. DRILL HOLES IN RAIL BARS TO SIZE AS FOLLOWS:

   SLOTTED, WRENCH HEAD OR TC BOLTS --- $^{1}/_{16}$" LARGER THAN BOLT DIAMETER
   RIB NECK BOLTS --- SIZE APPROPRIATE TO ACCOMODATE AN INTERFERENCE FIT

   USE 6" LENGTH BOLTS FOR FASTENING THE RAIL BARS TO THE POSTS AND INCLUDE A FLAT WASHER UNDER THE NUT.
10. FIELD-DRILL HOLES IN RAIL BARS AND COAT WITH AN APPROVED ZINC-RICH PAINT PRIOR TO ERECTION.
11. TIGHTEN BOLTS ON EXPANSION JOINTS ONLY TO A POINT THAT WILL ALLOW RAIL EXPANSION MOVEMENT.
12. ENSURE THAT $^{1}/_{8}$" PADS UNDER POST BASE PLATE ARE FABRIC PADS CONFORMING TO THE SPECIAL PROVISIONS.
13. STEEL FOUR-BAR RAILING SYSTEM TO BE PAID FOR AS ITEM NO. 0904305A - "METAL BRIDGE RAIL - FOUR RAIL".
14. CONCRETE END BLOCK TO BE PAID FOR AS ITEM NO. 0601201 - "CLASS 'F' CONCRETE".
15. ALL REINFORCING STEEL IN CONCRETE END BLOCKS SHALL BE EPOXY-COATED.

REV.	DATE	REVISION DESCRIPTION	SHEET NO.
-	-	-	-
-	-	-	-
-	-	-	-
-	-	-	-
-	-	-	-
-	-	-	-

THE INFORMATION, INCLUDING ESTIMATED QUANTITIES OF WORK, SHOWN ON THESE SHEETS IS BASED ON LIMITED INVESTIGATIONS BY THE STATE AND IS IN NO WAY WARRANTED TO INDICATE THE CONDITIONS OF ACTUAL QUANTITIES OF WORK WHICH WILL BE REQUIRED.

Plotted Date: 8/28/2018

DESIGNER/DRAFTER: MRS

CHECKED BY: BNK

SCALE AS NOTED

STATE OF CONNECTICUT
DEPARTMENT OF TRANSPORTATION

Filename: ..\SB_MSH_BR01343_018_134_FD_Bridge_Railing_2.dgn

SIGNATURE/BLOCK:

Hardesty & Hanover, LLC
59 Elm Street
New Haven, CT 06510

PROJECT TITLE:

REHABILITATION OF BRIDGE NO. 01343 ROUTE 133 OVER HOUSATONIC RIVER

TOWN: **BROOKFIELD/BRIDGEWATER**

DRAWING TITLE: **BRIDGE RAILING - 2**

PROJECT NO. **18-134**

DRAWING NO. **S-32**

SHEET NO. **05.32**

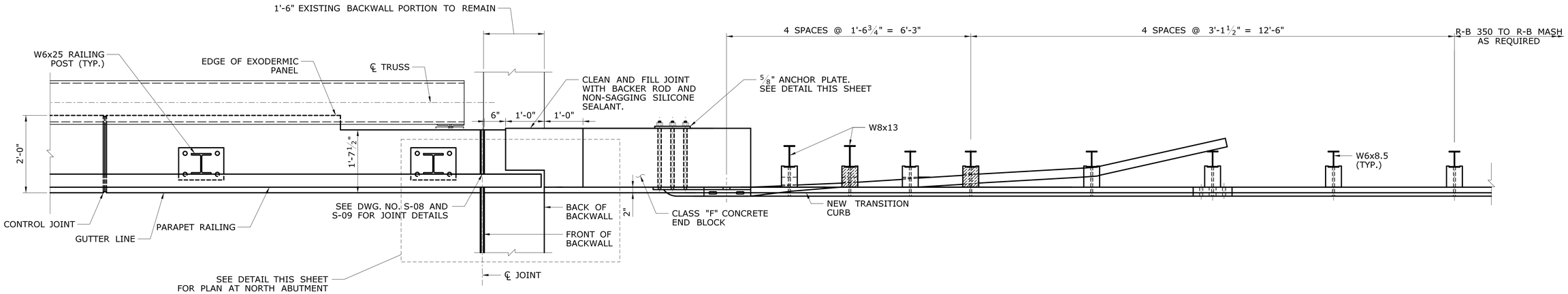

BRIDGE RAILING TRANSITION PLAN

SCALE: ¾" = 1'-0"

RAILING TRANSITION IS SHOWN FOR THE SOUTH ABUTMENT. NORTH ABUTMENT IS SIMILAR.

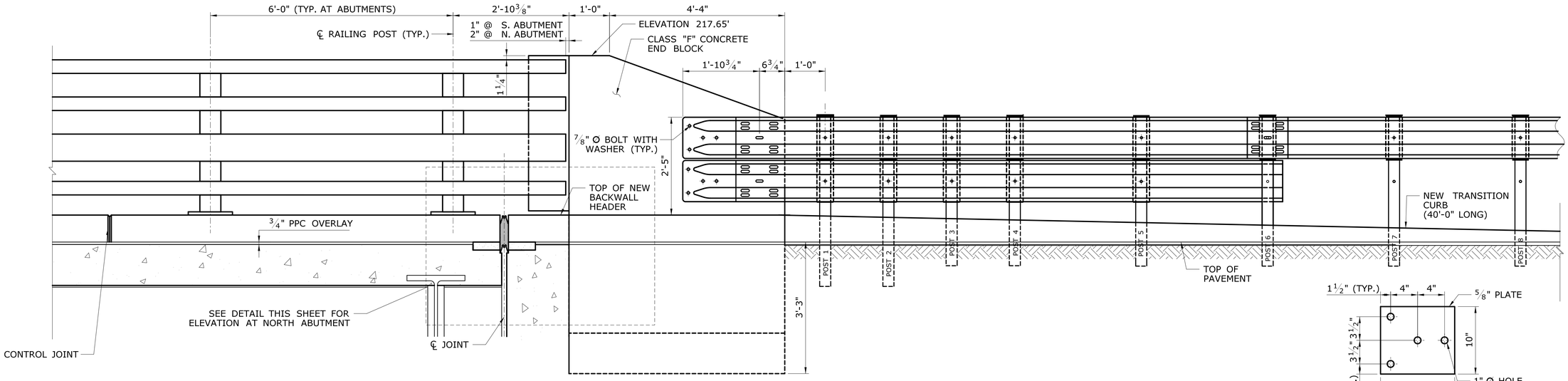

BRIDGE RAILING TRANSITION ELEVATION

SCALE: ¾" = 1'-0"

RAILING TRANSITION IS SHOWN FOR THE SOUTH ABUTMENT. NORTH ABUTMENT IS SIMILAR.

ANCHOR PLATE DETAIL

SCALE: 1½" = 1'-0"

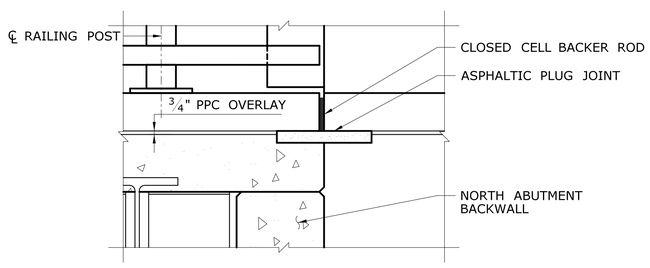

JOINT DETAIL AT NORTH ABUTMENT - ELEVATION

SCALE: ¾" = 1'-0"

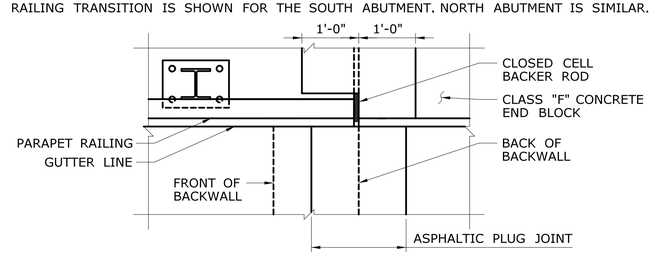

JOINT DETAIL AT NORTH ABUTMENT - PLAN

SCALE: ¾" = 1'-0"

NOTES:

1. FOR GUIDE RAIL ATTACHMENT CONSTRUCTION DETAILS, SEE CONNDOT HW-910_07.
2. ANCHOR PLATES SHALL CONFORM TO THE REQUIREMENTS OF ASTM A36. THE STEEL PLATES SHALL BE HOT-DIP GALVANIZED IN ACCORDANCE WITH THE REQUIREMENTS OF ASTM A123.
3. ANCHOR BOLTS SHALL CONFORM TO THE REQUIREMENTS OF ASTM A325, MECHANICALLY GALVANIZED.
4. 1" Ø PIPE SHALL CONFORM TO ASTM A53 GRADE B OR ASTM A501 AND SHALL BE GALVANIZED IN ACCORDANCE WITH THE REQUIREMENTS OF ASTM A123.
5. ALL RAILWAY AND RAIL ANCHORAGE MATERIALS REQUIRED FOR END ATTACHMENTS SHALL BE PAID FOR IN THE APPLICABLE *HIGHWAY* ITEMS.

REV.	DATE	REVISION DESCRIPTION	SHEET NO.
-	-	-	-
-	-	-	-
-	-	-	-
-	-	-	-
-	-	-	-
-	-	-	-

THE INFORMATION, INCLUDING ESTIMATED QUANTITIES OF WORK, SHOWN ON THESE SHEETS IS BASED ON LIMITED INVESTIGATIONS BY THE STATE AND IS IN NO WAY WARRANTED TO INDICATE THE CONDITIONS OF ACTUAL QUANTITIES OF WORK WHICH WILL BE REQUIRED.

Plotted Date: 8/28/2018

DESIGNER/DRAFTER: SS

CHECKED BY: BNK

SCALE AS NOTED

STATE OF CONNECTICUT
DEPARTMENT OF TRANSPORTATION

Filename: ...\SB_MSH_BR01343_018_134_FD_Bridge_Railing_3.dgn

SIGNATURE/BLOCK:

Hardesty & Hanover, LLC
59 Elm Street
New Haven, CT 06510

PROJECT TITLE:

REHABILITATION OF BRIDGE NO. 01343 ROUTE 133 OVER HOUSATONIC RIVER

TOWN: **BROOKFIELD/BRIDGEWATER**

PROJECT NO. **18-134**

DRAWING TITLE: **BRIDGE RAILING - 3**

DRAWING NO. **S-33**

SHEET NO. **05.33**

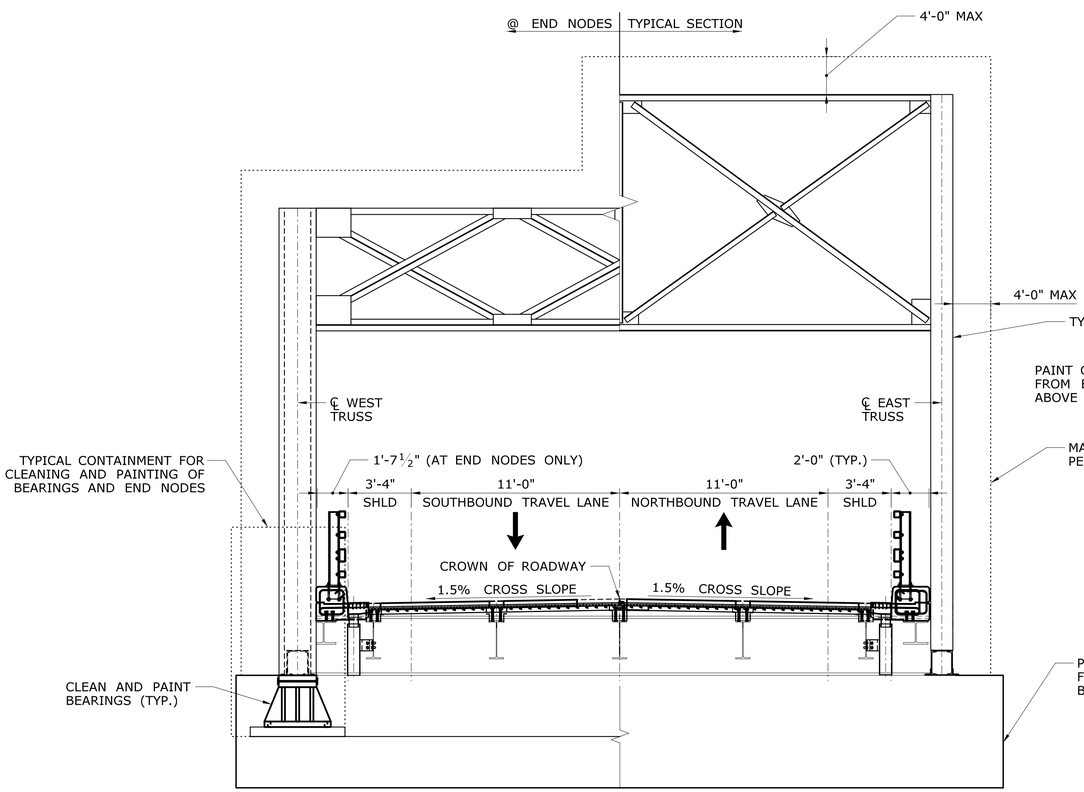

SECTION

SCALE: ¼" = 1'-0"

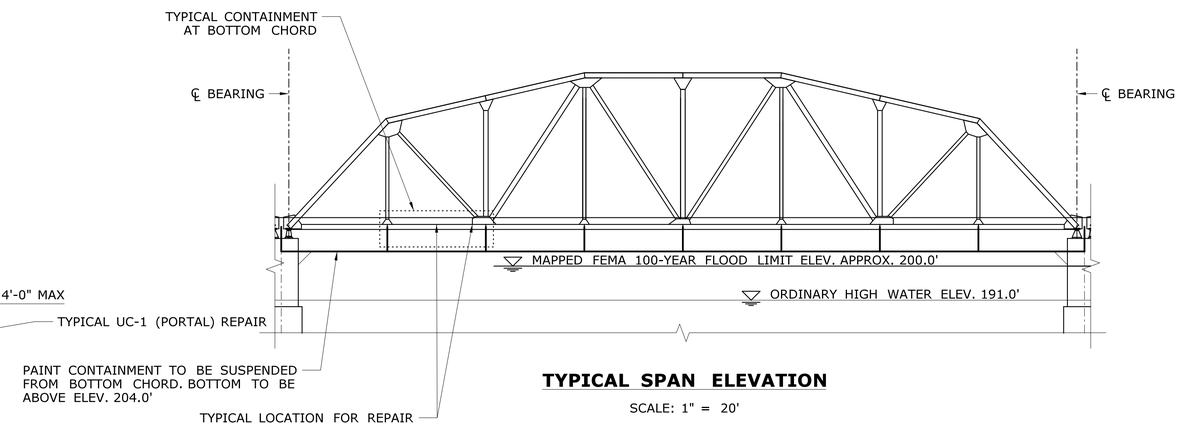

TYPICAL SPAN ELEVATION

SCALE: 1" = 20'

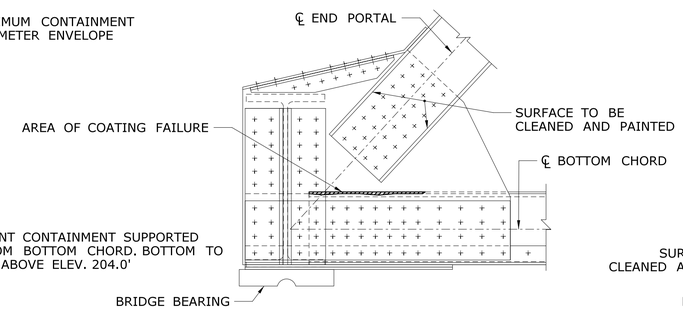

END NODE ELEVATION

SCALE: ¾" = 1'-0"

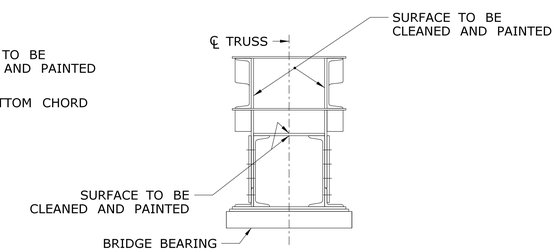

END NODE SECTION

SCALE: ¾" = 1'-0"

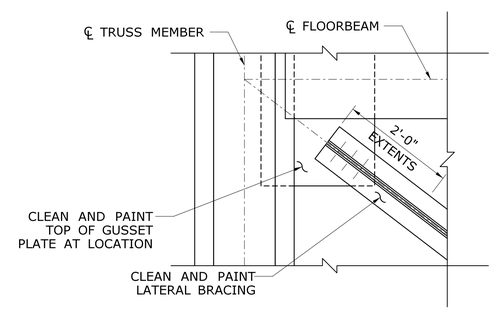

FLOORSYSTEM LATERAL BRACING

SCALE: ¾" = 1'-0"

PAINTING LIMIT NOTES:

1. BEARINGS: ALL BEARINGS SHALL BE CLEANED AND PAINTED.
2. END NODES: ALL TRUSS MEMBERS FRAMING INTO END NODES SHALL BE CLEANED AND PAINTED TO A MINIMUM OF 6 INCHES BEYOND COATING FAILURE.
3. FLOORSYSTEM LATERAL BRACING: CLEANING AND PAINTING SHALL BE PERFORMED AT ALL LATERAL BRACING ENDS AND GUSSET PLATES, AS DETAILED. (16 LOCATIONS ESTIMATED)
4. BC-1 REPAIR LOCATIONS: CLEANING AND PAINTING SHALL BE PERFORMED AT THESE LOCATIONS, IN ADDITION TO THE LIMITS SHOWN ON DWG. NO. S-16, TO SURFACES THAT EXHIBIT DETERIORATION TO A MINIMUM OF 6 INCHES BEYOND EDGE OF DETERIORATION.
5. LOCALIZED PAINTING: UNREPAIRED LOCATIONS WHICH EXHIBIT COATING FAILURE AS DETERMINED BY THE ENGINEER SHALL BE CLEANED AND PAINTED.

NOTES:

1. CLEANING AND PAINTING WORK AT STEEL REPAIR LOCATIONS TO BE PAID FOR UNDER ITEM NO. 0603081A - 'STRUCTURAL STEEL REPAIRS (SITE NO. 1)'.
2. CLEANING AND PAINTING WORK AS NOTED THIS SHEET TO BE PAID FOR UNDER ITEM NO. 0603729A - 'LOCALIZED PAINT REMOVAL AND FIELD PAINTING OF EXISTING STEEL'.
3. CLEANING OF TOP FLANGES OF FLOORBEAMS AND STRINGERS PAID FOR AS ITEM NO. 0601999A - "EXODERMIC DECK".
4. STAGING FOR PAINTING SHALL FOLLOW THE PROPOSED CONSTRUCTION STAGES AS SHOWN IN "SUBSET 04 - STAGING".
5. PAINT AND PAINTING EQUIPMENT SHALL BE STORED IN ACCORDANCE WITH CTDOT FORM 817, SECTION 1.10.03 - "WATER POLLUTION CONTROL".

REV.	DATE	REVISION DESCRIPTION	SHEET NO.
-	-	-	-
-	-	-	-
-	-	-	-
-	-	-	-
-	-	-	-
-	-	-	-

THE INFORMATION, INCLUDING ESTIMATED QUANTITIES OF WORK, SHOWN ON THESE SHEETS IS BASED ON LIMITED INVESTIGATIONS BY THE STATE AND IS IN NO WAY WARRANTED TO INDICATE THE CONDITIONS OF ACTUAL QUANTITIES OF WORK WHICH WILL BE REQUIRED.

Plotted Date: 8/28/2018

DESIGNER/DRAFTER: MRS

CHECKED BY: BNK

SCALE AS NOTED

STATE OF CONNECTICUT
DEPARTMENT OF TRANSPORTATION

Filename: ...\SB_MSH_BR01343_018_134_FD_Painting.dgn

SIGNATURE/BLOCK:

Hardesty & Hanover, LLC
59 Elm Street
New Haven, CT 06510

PROJECT TITLE:

REHABILITATION OF BRIDGE NO. 01343 ROUTE 133 OVER HOUSATONIC RIVER

TOWN: **BROOKFIELD/BRIDGEWATER**

DRAWING TITLE: **PAINTING AND CONTAINMENT**

PROJECT NO. **18-134**

DRAWING NO. **S-34**

SHEET NO. **05.34**