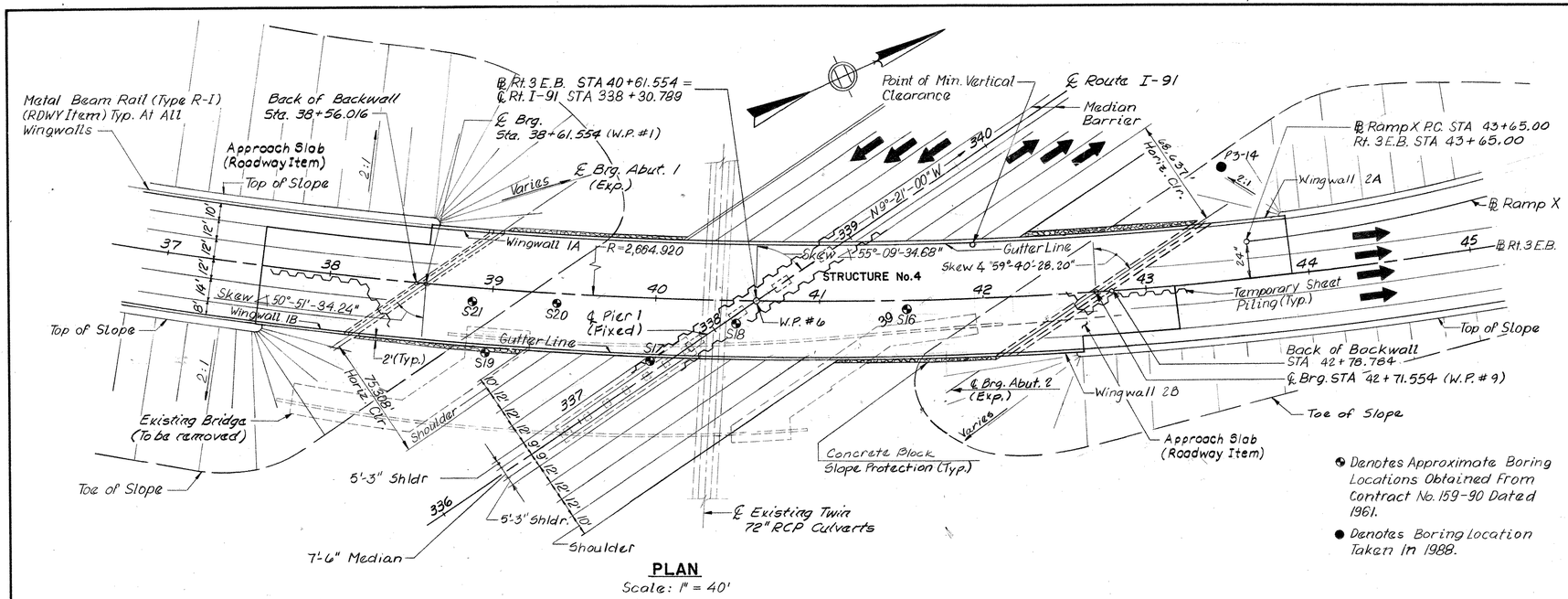

PLAN

Scale: 1" = 40'

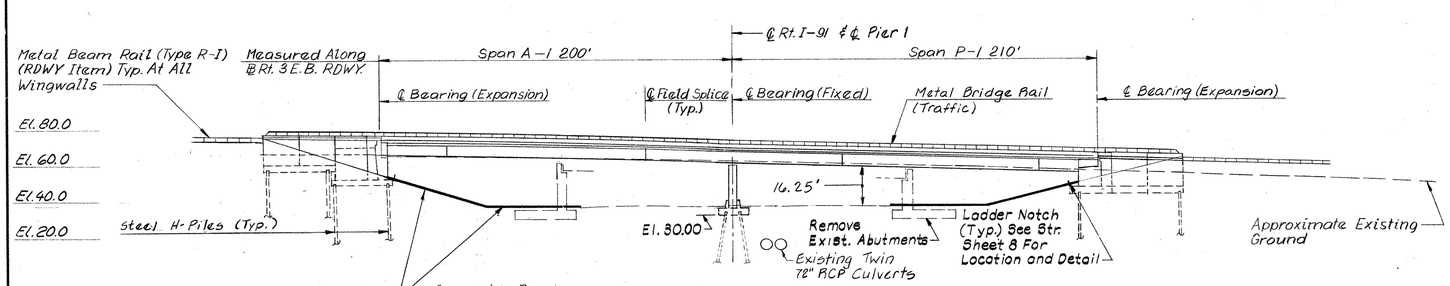

ELEVATION

Scale: 1" = 40'

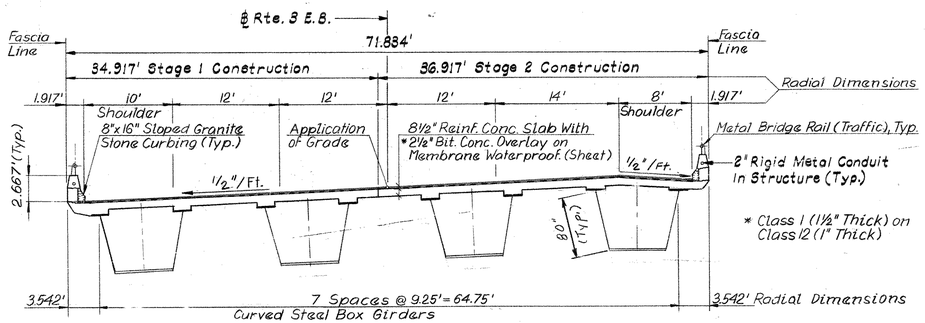

TYPICAL BRIDGE CROSS SECTION

Scale: ⅛" = 1'-0"

NOTICE TO BRIDGE INSPECTORS

The Department's Bridge Safety procedures require this bridge to be inspected for, but not limited to, all appropriate components indicated in the governing manuals for bridge inspection. Attention must be given to inspecting the following special components and details. (The listing of components for specific attention shall not be construed to reduce the importance of inspection of any other component of the structure.) The frequency of inspection of this structure shall be in accordance with the governing manuals for bridge inspection, unless otherwise directed by the Engineer of Bridges and Structures.

Component or Detail	Bridge Sheet Reference
Bolted Field Splices	16
Interior Box Girders	13

THE INFORMATION, INCLUDING ESTIMATED QUANTITIES OF WORK SHOWN ON THESE SHEETS IS BASED ON LIMITED INVESTIGATIONS BY THE STATE AND IS IN NO WAY WARRANTED TO INDICATE THE TRUE CONDITIONS OR ACTUAL QUANTITIES OR DISTRIBUTION OF QUANTITIES OF WORK WHICH WILL BE REQUIRED.

GENERAL NOTES

SPECIFICATIONS

Connecticut Department of Transportation Form 814 (1989) Interim Specifications and Special Provisions.

DESIGN SPECIFICATIONS

Standard Specifications for Highway Bridges (AASHTO) 1989), with Interim Specifications up to and including 1991 as supplemented by the Connecticut Department of Transportation Bridge Manual (1985).

ALLOWABLE DESIGN STRESSES

Class "A" Concrete f'_c = 3,000psi
Class "F" Concrete f'_c = 4,000psi
Reinforcement (ASTM A615 Grade 60) f_s = 24,000psi
Structural Steel (ASTM A709 Grade 50W) Ft=27,000 psi Thickness up to 4" incl.

LIVE LOAD

HS 20-44

FUTURE PAVING ALLOWANCE

None

REMAIN-IN-PLACE FORMS

Additional dead load for Remain in Place Forms = 6.0 psf within the boxes.

COMPOSITE CONSTRUCTION

No temporary intermediate supports shall be used during the placing and setting of the concrete deck slab.
Temporary supports may be used for structural steel erection only.
Live and superimposed dead loads will be permitted when directed by the Engineer but not less than 10 days after the final portion of the deck slab has been placed.

CLASS "A" CONCRETE

Class "A" Concrete shall be used for entire substructure and parapets of the U-Type wings.

CLASS "F" CONCRETE

Class "F" Concrete shall be used for bridge deck including parapets.

JOINT SEAL

See Special Provisions.

PARAFFIN

The cost of furnishing and applying paraffin is included in the item Class "F" Concrete.

EXPOSED EDGES

Exposed edges of concrete shall be beveled 1"x1" unless dimensioned otherwise.

STRUCTURAL STEEL

See Structure Sheet Number 13 for ASTM designations.

REINFORCEMENT

All reinforcement shall be ASTM A615 Grade 60.

EPOXY COATED REINFORCING BARS

All reinforcement in the superstructure including the concrete deck and the parapets shall be epoxy coated unless otherwise noted. All reinforcement in the piers including the dowels extending out of the footing shall be epoxy coated. These bars shall be included in the pay item for "Deformed Steel Bars (Epoxy Coated)." All reinforcement in the top mat of the concrete approach slabs including those in the headers shall be epoxy coated. These bars are roadway items and shall be included in the item "Deformed Steel Bars (Epoxy Coated)."

PAINT

Paint shall conform to the requirements of the special provision, "Structural Steel Bridge No. 159-148-4." The color of the topcoat material on the structural steel shall conform to Federal Standard Color No. 26329. [Approximately the Department's Standard Bridge Color No. 606 (Blue)]. The interior portions of the boxes shall be painted white.

BITUMINOUS CONCRETE OVERLAY

This shall consist of two lifts. The first shall be Bituminous Concrete - Class (12) (1" thick) and the second shall be Bituminous Concrete - Class (1) (1 1/2" thick).

FOUNDATION PRESSURES AND PILE LOADS

The various Group Loadings noted on the substructure plan sheets refer to the Group Loads as given in the AASHTO Standard Specifications for Highway Bridges.

CONSTRUCTION JOINTS

Construction joints, other than those shown on the plans, will not be permitted without the prior approval of the engineer.

DECIMAL DIMENSIONS

When dimensions are given to less than three decimal places, the omitted digits are assumed to be zeros.

THIS SHEET NOT CORRECTED

NO.	DATE	DESCRIPTION

REVISIONS

STATE OF CONNECTICUT
DEPARTMENT OF TRANSPORTATION

WETHERSFIELD

MODERNIZATION OF THE ROUTES 3 & I-91 INTERCHANGE

ROUTE 3 E.B. ROADWAY OVER INTERSTATE 91

GENERAL PLAN

ENGINEER H. W. LOCHNER, INC.
DESIGNER S.R.A. DRAFTER M.A.N./V.S. CHECKER L.E.
APPROVED [signature] DATE 4/92
STRUCTURE NO. 159-148-4 BRIDGE LOG NO. STRUCTURE SHEET NO. 1 of 25

F.H.W.A. REGION NO.	STATE	TOWN	FED. AND PROJ. NO.	PROJ. NO.	YEAR	ROUTE NO.	SHEET NO.	TOTAL SHEETS
1	CONN.	WETHERSFIELD	XAM-1718(2)	159-148	1992	I-91	135	222

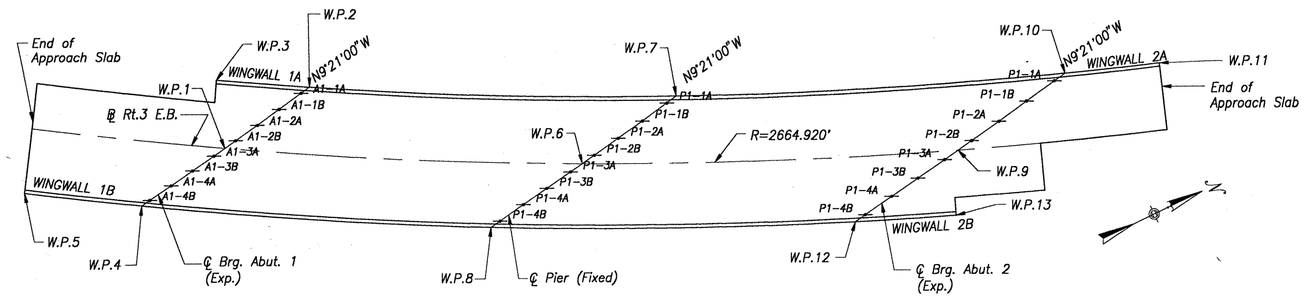

BASIC LAYOUT PLAN

SCALE: 1"=40'

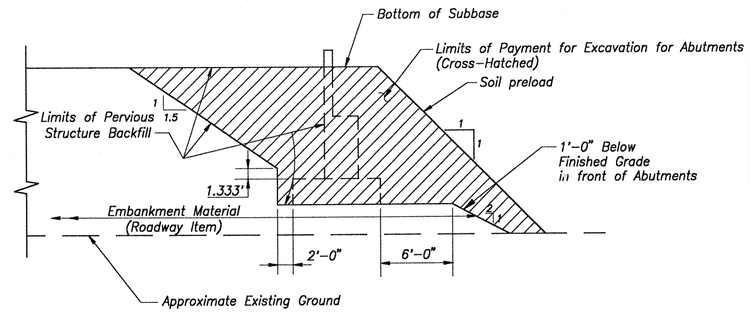

TYPICAL ABUTMENT SECTION

CONCRETE DISTRIBUTION		
ITEM	UNIT	QUANTITY STR. NO. 4
Superstructure	C.Y.	1000
Substructure	C.Y.	1010
Footings	C.Y.	1090
Total	C.Y.	3100

INSPECTION OF FIELD WELDS		
METHOD	UNIT	QUANTITY STR. NO. 4
Ultrasonic	IN.	0
Magnetic Particle	L.F.	0
Radiographic or Ultrasonic	IN.	0

COORDINATES STR. NO. 159-148-4			
LOCATION		NORTH	EAST
End of Approach Slab Abutment 1	L.G.L.	318291.292	628361.163
	℄ Rt.3 E.B.	318188.269	628338.849
	R.G.L.	318170.194	628367.646
End of Slab Abutment 1	L.G.L.	318331.312	628383.762
	℄ Rt.3 E.B.	318277.730	628392.585
	R.G.L.	318225.164	628401.240
℄ of Brg. Abutment 1 Girders*	A1-1A	318332.020	628386.010
	A1-1B	318317.324	628388.430
	A1-2A	318302.709	628390.837
	A1-2B	318288.173	628393.230
	A1-3A	318273.713	628395.611
	A1-3B	318259.328	628397.979
	A1-4A	318245.017	628400.336
	A1-4B	318230.776	628402.681
℄ Brg. Pier Girders*	P1-1A	318514.712	628477.858
	P1-1B	318498.375	628480.548
	P1-2A	318482.162	628483.217
	P1-2B	318466.070	628485.867
	P1-3A	318450.093	628488.498
	P1-3B	318434.230	628491.110
	P1-4A	318418.475	628493.704
	P1-4B	318402.826	628496.280
℄ Brg. Abutment 2 Girders*	P1-1A	318715.436	628559.391
	P1-1B	318696.773	628562.464
	P1-2A	318678.314	628565.503
	P1-2B	318660.049	628568.510
	P1-3A	318641.972	628571.487
	P1-3B	318624.075	628574.433
	P1-4A	318606.351	628577.352
	P1-4B	318588.792	628580.243
End of Slab Abutment 2	L.G.L.	318723.272	628560.465
	℄ Rt.3 E.B.	318655.311	628571.655
	R.G.L.	318589.862	628582.432
End of Approach Slab Abutment 2	L.G.L.	318772.113	628577.299
	℄ Rt.3 E.B.	318609.550	628761.349
	R.G.L.	318635.201	628600.360

CONNECTICUT GRID COORDINATES		
	RTE. 3 E.B. ℄	
	NORTH	EAST
CENTER OF CURVE	319604.945	626081.677
P.C.	317980.288	628194.~~503~~ 080
P.T.	319016.215	628680.752
P.I.	318~~205.000~~ 444.750	628~~497.000~~ 551.307 △1

WORKING POINT COORDINATES		
	NORTH	EAST
W.P.1	318280.934	628394.422
W.P.2	318337.669	628385.080
W.P.3	318292.250	628359.502
W.P.4	318225.342	628403.575
W.P.5	318169.175	628369.270
W.P.6	318458.067	628487.185
W.P.7	318521.002	628476.822
W.P.8	318396.862	628497.262
W.P.9	318650.988	628570.002
W.P.10	318722.639	628558.205
W.P.11	318772.720	628575.480
W.P.12	318582.111	628581.343
W.P.13	318634.512	628602.149

L.G.L. Denotes Left Gutter Line
R.G.L. Denotes Right Gutter Line

* Intersections of ℄ of Bearings with ℄ of Top Flanges of Box Girders

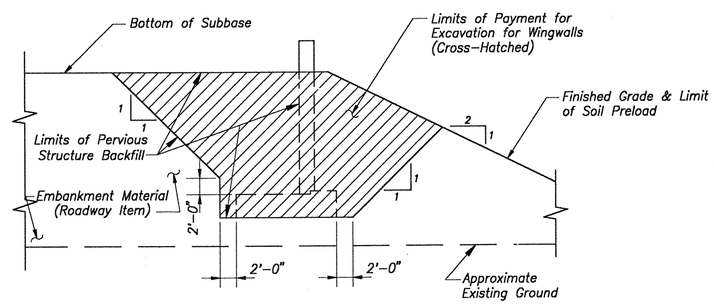

TYPICAL WINGWALL SECTION

LIMITS OF STRUCTURE EXCAVATION AFTER SOIL PRELOAD

Not to Scale

CURVE DATA	
RTE. 3 E.B. ℄	
R =	2664.92
L =	1153.531
T =	~~312.698~~ 585.943
Δ =	~~34° 40' 04.9"~~ 24°48'03.3 △1
D =	2°-09'-00.0"
P.C. STA.	35+00.00
P.T. STA.	46+53.531

TABLE OF QUANTITIES		
ITEM	UNIT	QUANTITY STR. NO. 4
Structure Excavation – Earth (Complete)	CY	11000
Pervious Structure Backfill	CY	2940
Bituminous Concrete – Class (1)	Ton	280
Bituminous Concrete – Class (12)	Ton	190
Shear Connectors	LS	1
1-1/2" Polyvinyl Chloride Plastic Pipe	LF	192
Pot, Spherical or Disc Bearings (450 Kips)	Ea.	8
Pot, Spherical or Disc Bearings (1400 Kips)	Ea.	4
Class "A" Concrete	CY	2100
Class "F" Concrete	CY	1000
1/2" Preformed Expansion Joint Filler for Bridges	SF	280
1" Preformed Expansion Joint Filler for Bridges	SF	820
Deformed Steel Bars	LB	139,000
Deformed Steel Bars (Epoxy Coated)	LB	187,000
Structural Steel Bridge No. 159-148-4	LS	1
Furnishing Steel Piles	LB	1,420,300
Driving Steel Piles	LF	19,200
Test Pile (Steel HP 12x74-100' Long)	Ea.	2
Pile Loading Test	Ea.	1
Splicing Steel Piles	Ea.	10
Point Reinforcement for Steel Piles	Ea.	10
Membrane Waterproofing (Sheet)	SY	3270
Dampproofing	SY	1010
Concrete Block Slope Protection	SY	1610
8" x 16" Sloped Granite Stone Curbing for Bridges	LF	1050
Protective Compound for Bridges	SY	800
2" Rigid Metal Conduit in Structure	LF	1050
3/4" Rigid Metal Conduit in Structure	LF	110
18" x 12" x 8" Cast Iron Juction Box	Ea.	8
Splicing Steel Box Girders 159-148-4	Ea.	16
Welded Studs	Ea.	350
Concrete Cylinder Curing Box	Ea.	1
6" CCM Outlets for Underdrain	LF	210
Temporary Sheet Piling	SF	4670
Sheet Piling Material Left in Place	SF	934
Metal Bridge Rail (Traffic)	LF	1050
Removal of Existing Masonry	CY	1600
Gravel Fill	CY	110
Removal of Superstructure	LS	1
Access Manholes and Covers Bridge No. 159-148-4	Ea.	8
Elastomeric Concrete Joint System	LF	255
Bagged Stone	CF	112
Test Pit Excavation	CY	15

△1 - As Built Information - July 1995

THE INFORMATION, INCLUDING ESTIMATED QUANTITIES OF WORK SHOWN ON THESE SHEETS IS BASED ON LIMITED INVESTIGATIONS BY THE STATE AND IS IN NO WAY WARRANTED TO INDICATE THE TRUE CONDITIONS OR ACTUAL QUANTITIES OR DISTRIBUTION OF QUANTITIES OF WORK WHICH WILL BE REQUIRED.

NO.	DATE	DESCRIPTION

REVISIONS

CONNECTICUT
DEPARTMENT OF TRANSPORTATION

WETHERSFIELD

MODERNIZATION OF THE ROUTES 3 & I-91 INTERCHANGE

ROUTE 3 E.B. ROADWAY OVER INTERSTATE 91

LAYOUT PLAN AND QUANTITIES

ENGINEER H. W. LOCHNER, INC.
DESIGNER S.R.A. | DRAFTER C.S.F. | CHECKER L.E.
APPROVED [signature] | DATE 4/92
STRUCTURE NO. 159-148-4 | BRIDGE LOG NO | STRUCTURE SHEET NO. 2 OF 25

159-148

443-01

F.H.W.A. REGION NO.	STATE	TOWN	FED. AID PROJ. NO.	PROJ. NO.	YEAR	ROUTE NO.	SHEET NO.	TOTAL SHEETS
1	CONN.	WETHERSFIELD	XAM-1718(2)	159-148	1992	I-91	136	222

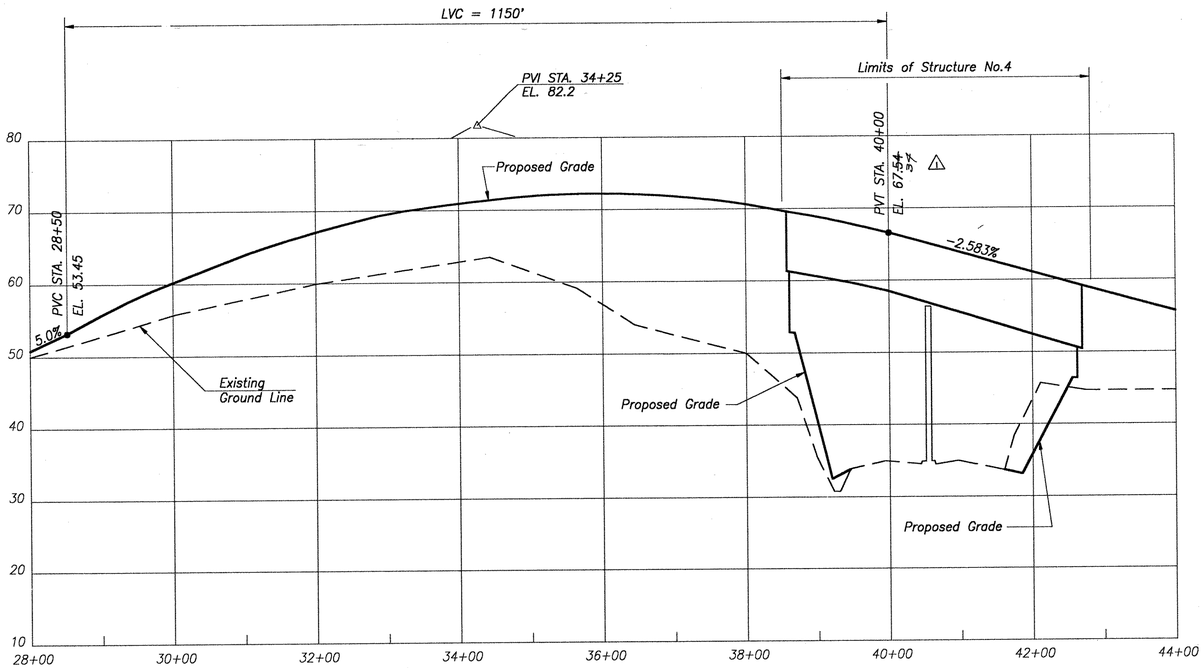

PROFILE – ROUTE 3 E.B. ROADWAY

Scale: Horiz. 1"=100'
Vert. 1"=10'

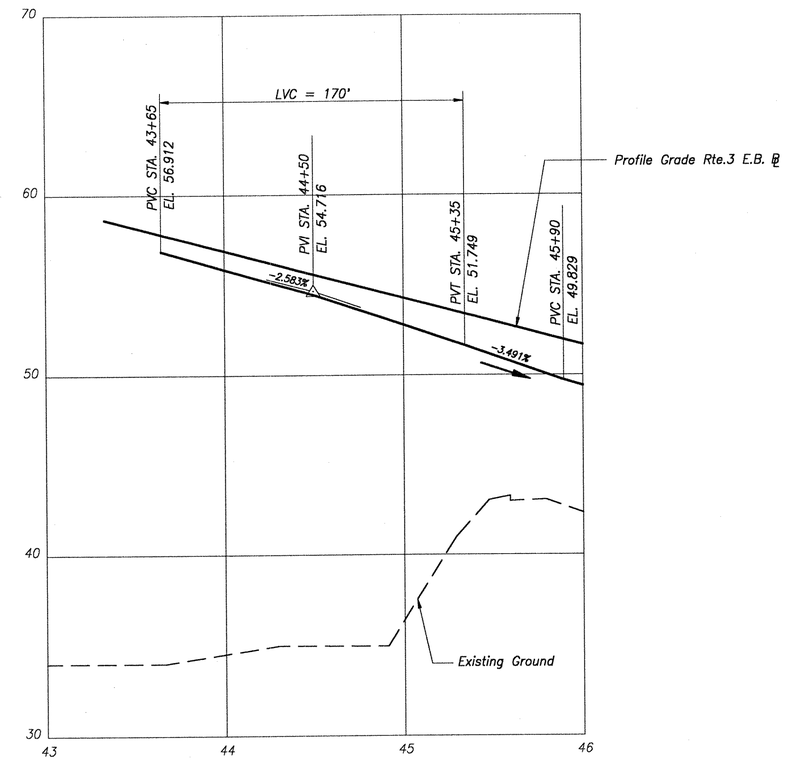

PROFILE – RAMP "X"

Scale: Horiz. 1"=40'
Vert. 1"=4'

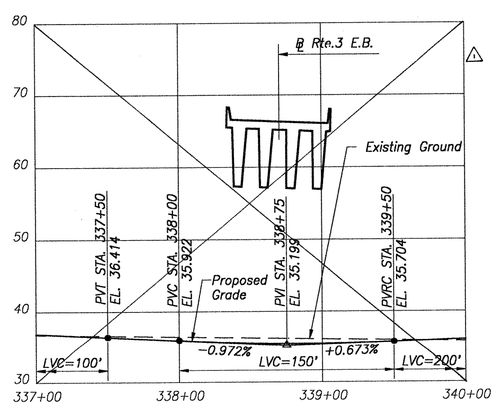

PROFILE I-91 N.B. ROADWAY

Scale: Horiz. 1"=50'
Vert. 1"=10'

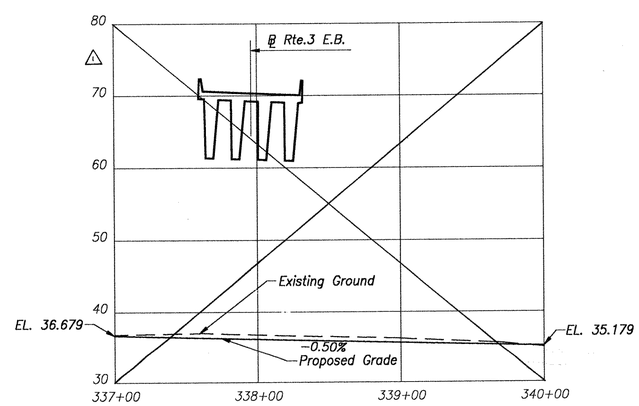

PROFILE I-91 S.B. ROADWAY

Scale: Horiz. 1"=50'
Vert. 1"=10'

△1 - As Built Information - July 1995

THIS SHEET IS CORRECTED

THE INFORMATION, INCLUDING ESTIMATED QUANTITIES OF WORK SHOWN ON THESE SHEETS IS BASED ON LIMITED INVESTIGATIONS BY THE STATE AND IS IN NO WAY WARRANTED TO INDICATE THE TRUE CONDITIONS OR ACTUAL QUANTITIES OR DISTRIBUTION OF QUANTITIES OF WORK WHICH WILL BE REQUIRED.

NO.	DATE	DESCRIPTION

REVISIONS

CONNECTICUT
DEPARTMENT OF TRANSPORTATION

WETHERSFIELD

MODERNIZATION OF THE ROUTES 3 & I-91 INTERCHANGE

ROUTE 3 E.B. ROADWAY OVER INTERSTATE 91

PROFILES

ENGINEER H. W. LOCHNER, INC.
DESIGNER S.R.A. | DRAFTER C.S.F. | CHECKER L.E.
APPROVED [signature] DATE 4/92
STRUCTURE NO. 159-148-4 | BRIDGE LOG NO | STRUCTURE SHEET NO. 3 OF 25

159-148

443-01

136

P3-14

SURFACE ELEV. 24.8				AUGER	CASING	SAMPLER	CORE BAR	HOLE NO. P3-14
DATE FINISHED 8/17/88			TYPE		STEEL	SS	2"	LINE & STATION
GROUND WATER OBSERVATIONS			SIZE I.D.		2½"& 4"	1⅜"-2⅜"	13/2"	OFFSET
AT 11 FT. AFTER 0 HRS			HAMMER WT		300	140-300	BIT	N. COORDINATE 318751
AT FT. AFTER HRS			HAMMER FALL		24"-30"	30"-17"	DIAMOND	E. COORDINATE 628532

DEPTH	CASING BLOWS PER FOOT	SAMPLE DEPTHS IN FEET FROM - TO	NO.	PEN INCH	REC INCH	TYPE	BLOWS PER 6 INCH ON SAMPLER 0-6	6-12	12-18	STRATA CHANGE DEPTH ELEV.	FIELD IDENTIFICATION OF SOIL. REMARKS (INCL. COLOR, LOSS OF WASH WATER, SEAMS IN ROCK, ETC.)
	DUG										
	20										BROWN F. SAND SOME SILT TRACE C. SAND, GRAVEL, COBBLES MIXED W/GRAYSAND
	35										
	50									5	
5	50										
	90										
	30	6 - 7.5	1	18	14	D	20	18	13	19.8	GRAY SILT & F. SAND, TR. CS, TR.- ORGAN.
	50									9	
	65										
10	55									15.5	
	60	11 - 12.5	2	18	16	D	2	1	1		BL. & BR. SILT, SOME CLAY, TR. SAND, TRACE ORGANIC
	40										
	55										
	65									14	
15	80									10.8	
	85										GRAY-BR. MOTTLED SILT TRACE F. SAND
	65	16 ± 17.5	3	18	12	D	5	6	10	18	
	83										
	95									6.8	
20	145										
	115										BR. C.-F. SAND, LITTLE F. GRAVEL, TRACE SILT
	90	21.5- 23	4	18	13	D	7	14	20		
	110										
	140										
25	125										
	125									26	
	70	26.5 - 28	5	18	0	D	1	1	1	-1.2	GRAY CLAY SOME SILT TR. SAND
	90										
	80	28 - 29.5	6	18	0	D	1	2	2	29.5	
30	75	29.5 - 31	7	18	0	D	1	2	1	-4.7	GRAY-REDBROWN CLAY LITTLE SILT TRACE SAND
	70										
	70	31 - 33	8	24	22	UP					
	75										
	70	33 - 35	9	24	17	UP					
35	75										
	80	35 - 37	10	24	23	UP					
	70										
	80	37 - 38.5	11	18	18	UP					
	80	38.5 - 40.5	12	24	0	UP					
	85										
40	75	40.5 - 42.5	13	24	23	UP					GRAY REDBR. CLAY LITTLE TO SOME SILT TRACE SAND
	75										
	70	42.5 - 44.5	14	24	24	UP					
	75										
45	70	44.5 - 46.5	15	24	24	UP					
	75										
	70	46.5 - 48.5	16	24	23	UP					
	73										
	70	48.5 - 50.5	17	24	22½	UP					
50	75										
	75	50.5 - 52.5	18	24	22	UP					
	80										
	80	52.5 - 54.5	19	24	22	UP					
	85										
55	80	54.5 - 56.5	20	24	21	UP					
	40										
	85	56.5 - 57.0	21	6	6	UP				57	
	115									-32.2	REDBR SILT, LITTLE CLAY, LITTLE SAND, TRACE GRAVEL
	120									59	
60	60									-34.2	
	5	60 - 61.5	22	18	17	D	35	33	40		REDBROWNF.-C. SAND SOME SILT SOME F.-M.GRAVEL TRACE CLAY
	12										
	70										
	130										
65	120										
	20	65 - 66.5	23	18	16	D	20	55	60		RED BROWN F.M. GRAVEL & C-F. SAND, LITTLE SILT
	40										
	70										NOTE: DRILLED AHEAD OF CASING FROM 61.5' - 78.5'
	105										
70	85									70.5	
	20	70 - 71	24	12	10	D	55	80		-45.7	RED BROWN F.M. GRAVEL SOME C-F SAND LITTLE SILT, TRACE CLAY WITH COBBLES
	50										
	70										
	100										
75	105										
	30										
	60										
	80									78.5	
	50/05	78.5 - 83.5		60	30	C				-53.7	RED BR. GRAY SHALE W/SEAMS OF SILT-CLAY 50% CORE RECOVERY

FROM GROUND SURFACE TO 56 FEET USED 4 INCH CASING THEN 2½ INCH CASING FOR 22½ FEET

FOOTAGE IN EARTH 78½ FOOTAGE IN ROCK 5 NO. OF SAMPLES 20 HOLE NO. P3-14

SAMPLE TYPE CODING: D=DRIVE O=CORE A=AUGER UP=UNDISTURBED, PISTON V=VANE TEST
PROPORTIONS USED: TRACE=1-10% LITTLE=10-20% SOME=20-35% AND =35-50%

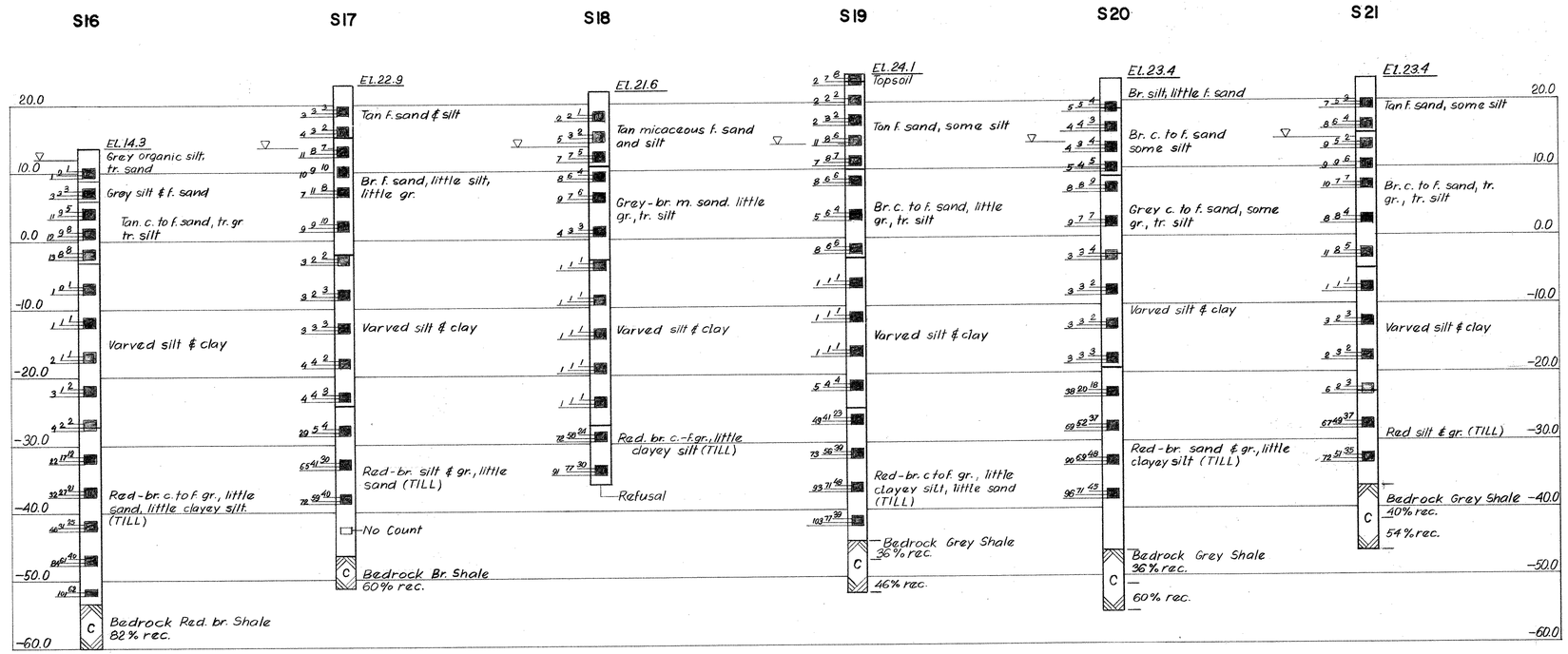

KEY

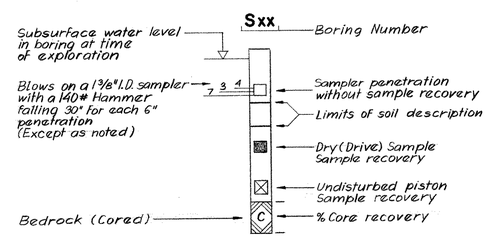

LEGEND

br.	brown
c.	coarse
f.	fine
tr.	trace
gr.	gravel
rec.	recovery

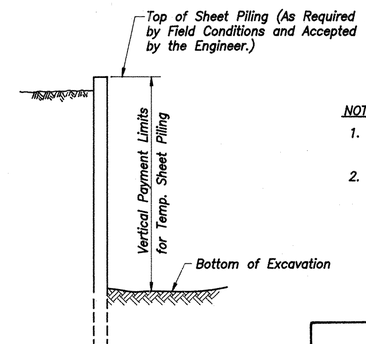

LIMITS OF PAYMENT FOR TEMPORARY SHEET PILING

Not to Scale

NOTES:

1. The Horizontal Payment Limits for Temporary Sheet Piling shall be determined based on Field Conditions and as accepted by the Engineer.
2. Sheet Piling if ordered left in place shall have an Additional Payment under the item "Sheet Piling Materials Left In Place."

THIS SHEET NOT CORRECTED

THE INFORMATION, INCLUDING ESTIMATED QUANTITIES OF WORK SHOWN ON THESE SHEETS IS BASED ON LIMITED INVESTIGATIONS BY THE STATE AND IS IN NO WAY WARRANTED TO INDICATE THE TRUE CONDITIONS OR ACTUAL QUANTITIES OR DISTRIBUTION OF QUANTITIES OF WORK WHICH WILL BE REQUIRED.

NO.	DATE	DESCRIPTION

REVISIONS

STATE OF CONNECTICUT
DEPARTMENT OF TRANSPORTATION

WETHERSFIELD

MODERNIZATION OF THE ROUTES 3 & I-91 INTERCHANGE

ROUTE 3E.B. ROADWAY OVER INTERSTATE 91

BORING LOGS

ENGINEER H. W. LOCHNER, INC.		
DESIGNER S.R.A.	DRAFTER V.S.	CHECKER S.R.A.
APPROVED		DATE 4/92
STRUCTURE NO. 159-148-4	BRIDGE LOG NO	STRUCTURE SHEET NO 4 of 25

F.H.W.A. REGION NO.	STATE	TOWN	FED. AID PROJ. NO.	PROJ. NO.	YEAR	ROUTE NO.	SHEET NO.	TOTAL SHEETS
1	CONN.	WETHERSFIELD	XAM-1718(2)	159-148	1992	I-91	138	222

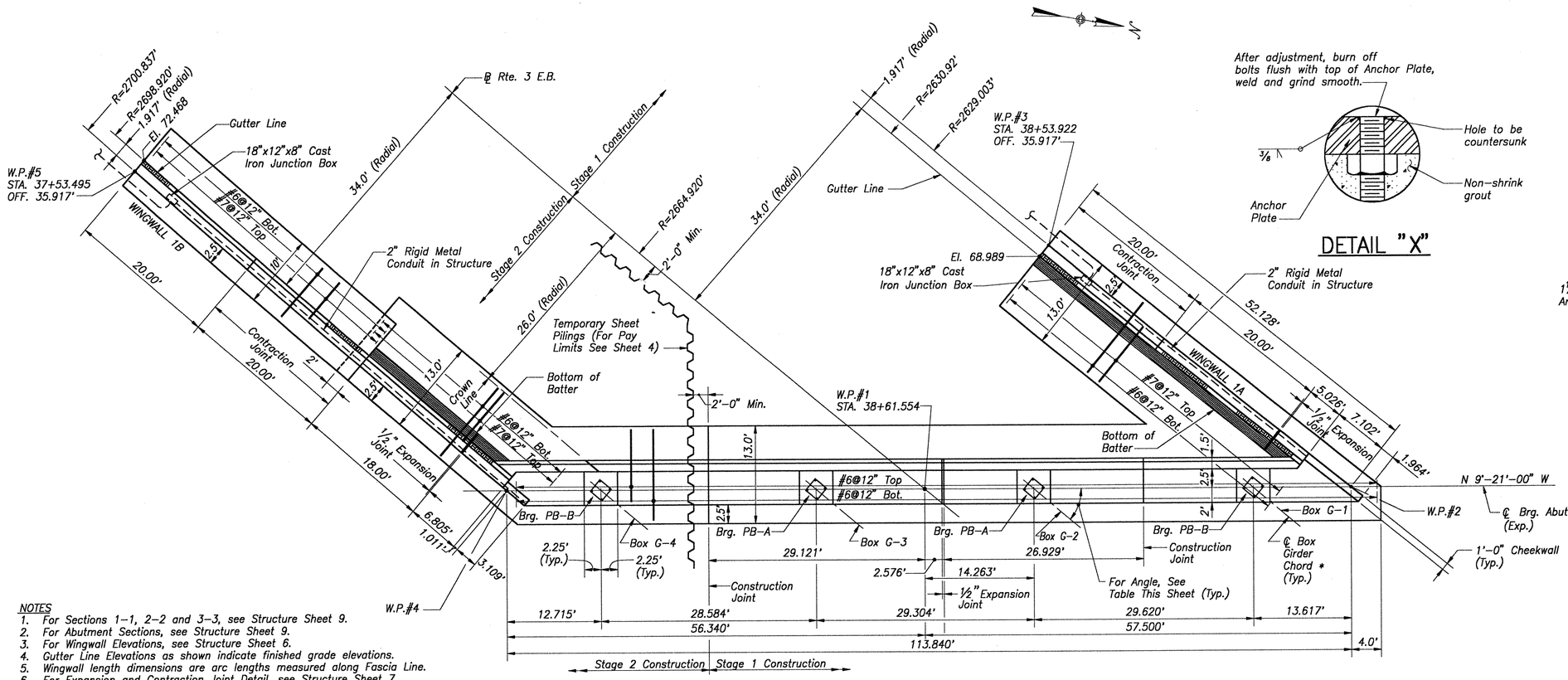

NOTES
1. For Sections 1–1, 2–2 and 3–3, see Structure Sheet 9.
2. For Abutment Sections, see Structure Sheet 9.
3. For Wingwall Elevations, see Structure Sheet 6.
4. Gutter Line Elevations as shown indicate finished grade elevations.
5. Wingwall length dimensions are arc lengths measured along Fascia Line.
6. For Expansion and Contraction Joint Detail, see Structure Sheet 7.
7. For Electrical Details, see Structure Sheet 25.

PLAN

Scale: 1/8"=1'-0"

* Chord is measured from ℄ Brg. Abut. 1 to ℄ Brg. Pier 1.

DETAIL "X"

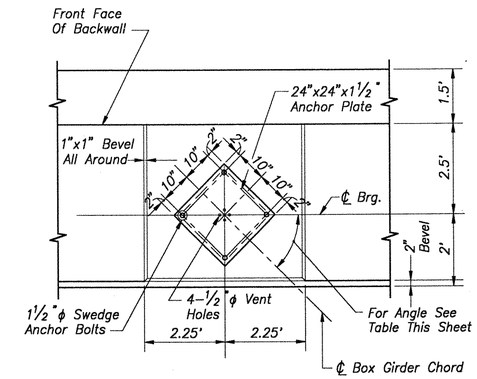

PLAN

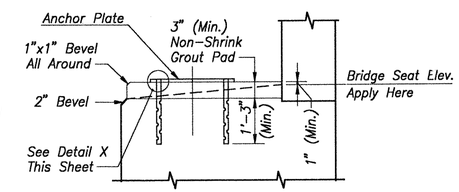

SECTION X-X

ANCHOR PLATE DETAILS

Scale: 1/2"=1'-0"

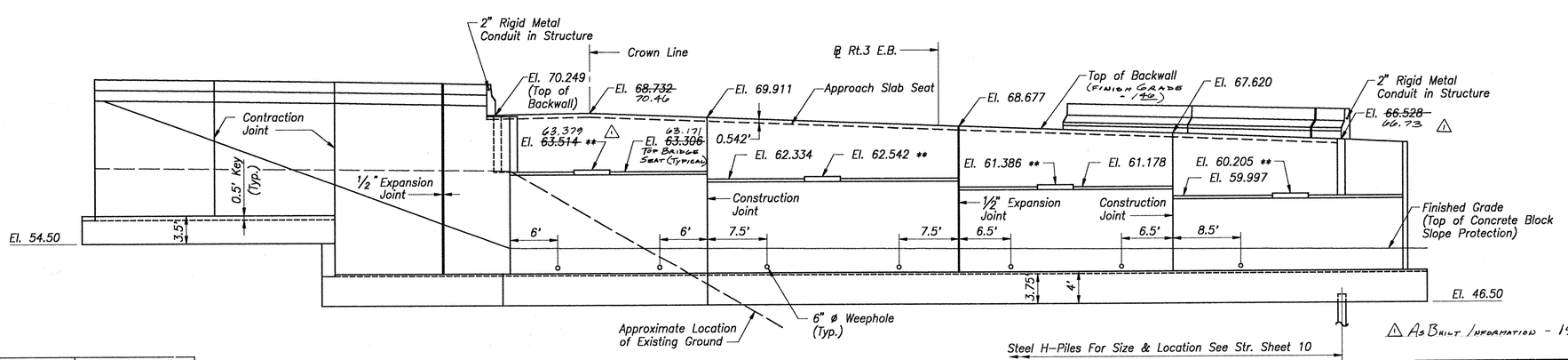

△ As Built Information - 1995

LOCATION	ANGLE
Box G-1	36°-11'-14.044"
Box G-2	36°-43'-53.470"
Box G-3	37°-15'-41.115"
Box G-4	37°-46'-12.836"

** Denotes Elevation Top of Anchor Plate.

ELEVATION

Scale: 1/8"=1'-0"

NOTES

Anchor Bolts Shall Be Monolithic With The Substructure. No Anchor Bolt Forms Shall Be Used. The Anchor Plate Shall Be Set To The Correct Elevation (After Superstructure Steel Is Erected), Leveled By Adjusting The Leveling Nuts And The Anchor Bolts Shall Be Burned Off Flush With Top Of Anchor Plate, Welded And Ground Smooth.

The Base Plate Of Bearing Shall Be Welded To Anchor Plate After The Bearing Are Correctly Located.

Non-Shrink Grout Shall Be Placed Prior To Placing Superstructure Steel.

THE INFORMATION, INCLUDING ESTIMATED QUANTITIES OF WORK SHOWN ON THESE SHEETS IS BASED ON LIMITED INVESTIGATIONS BY THE STATE AND IS IN NO WAY WARRANTED TO INDICATE THE TRUE CONDITIONS OR ACTUAL QUANTITIES OR DISTRIBUTION OF QUANTITIES OF WORK WHICH WILL BE REQUIRED.

NO.	DATE	DESCRIPTION

REVISIONS

CONNECTICUT
DEPARTMENT OF TRANSPORTATION

WETHERSFIELD

MODERNIZATION OF THE ROUTES 3 & I-91 INTERCHANGE

ROUTE 3 E.B. ROADWAY OVER INTERSTATE 91

ABUTMENT NO. 1

ENGINEER H. W. LOCHNER, INC.

DESIGNER B.B.B. | DRAFTER C.S.F. | CHECKER I. E.

APPROVED [signature] DATE 4/92

STRUCTURE NO. 159-148-4 | BRIDGE LOG NO | STRUCTURE SHEET NO. 5 OF 25

F.H.W.A. REGION NO.	STATE	TOWN	FED. AID PROJ. NO.	PROJ. NO.	YEAR	ROUTE NO.	SHEET NO.	TOTAL SHEETS
1	CONN.	WETHERSFIELD	XAM-1718(2)	159-148	1992	I-91	139	222

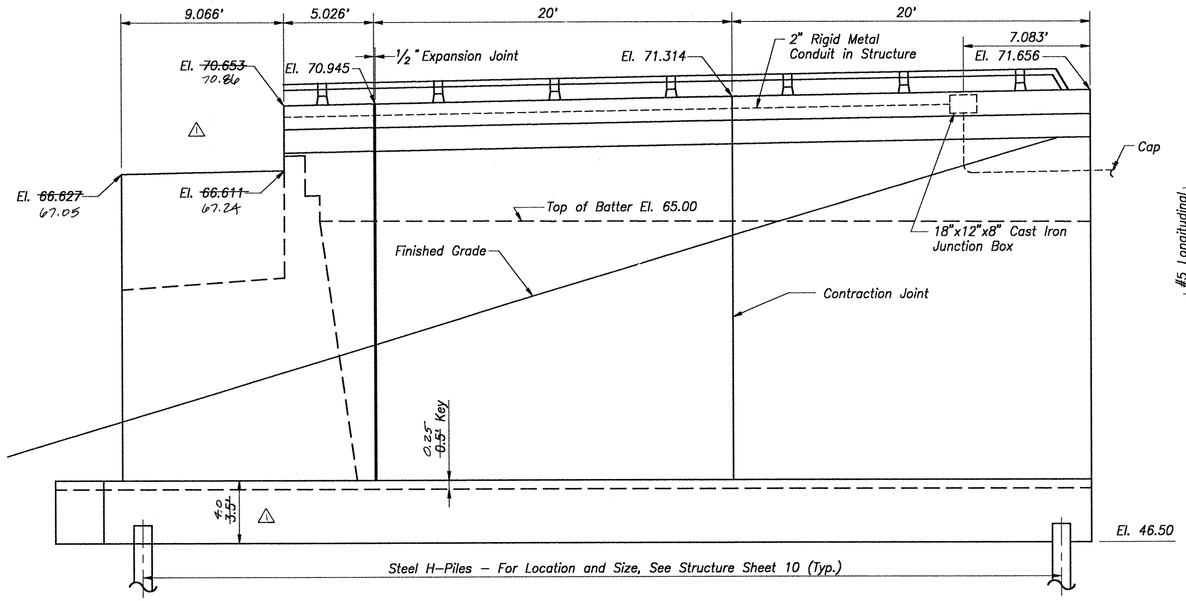

ELEVATION – WINGWALL 1A

Scale: 1/4"=1'-0"

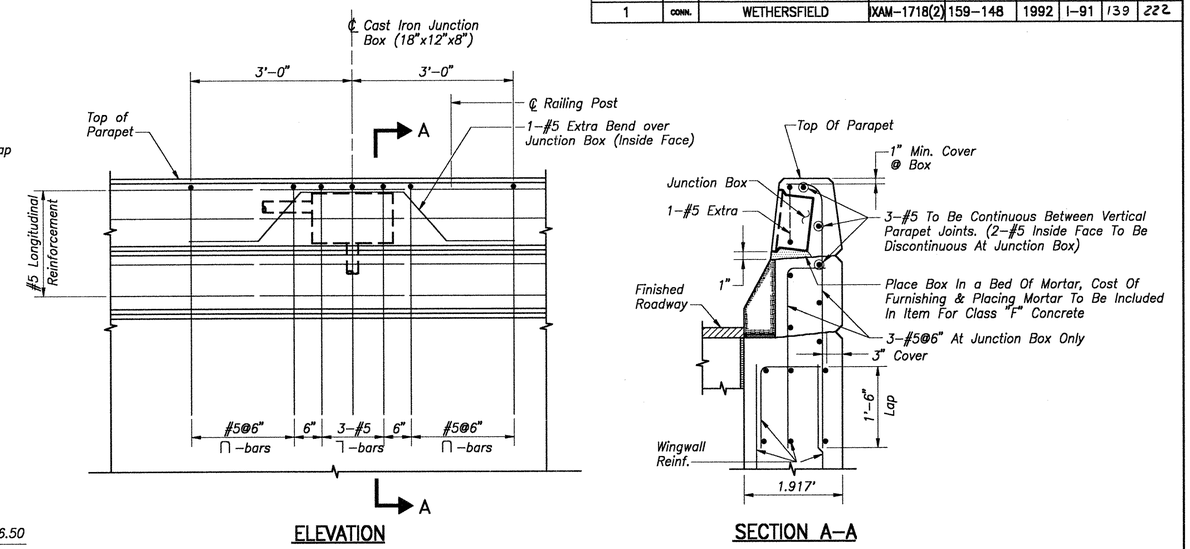

JUNCTION BOX REINFORCEMENT DETAIL IN WINGWALL PARAPET

Scale: 3/4"=1'-0"

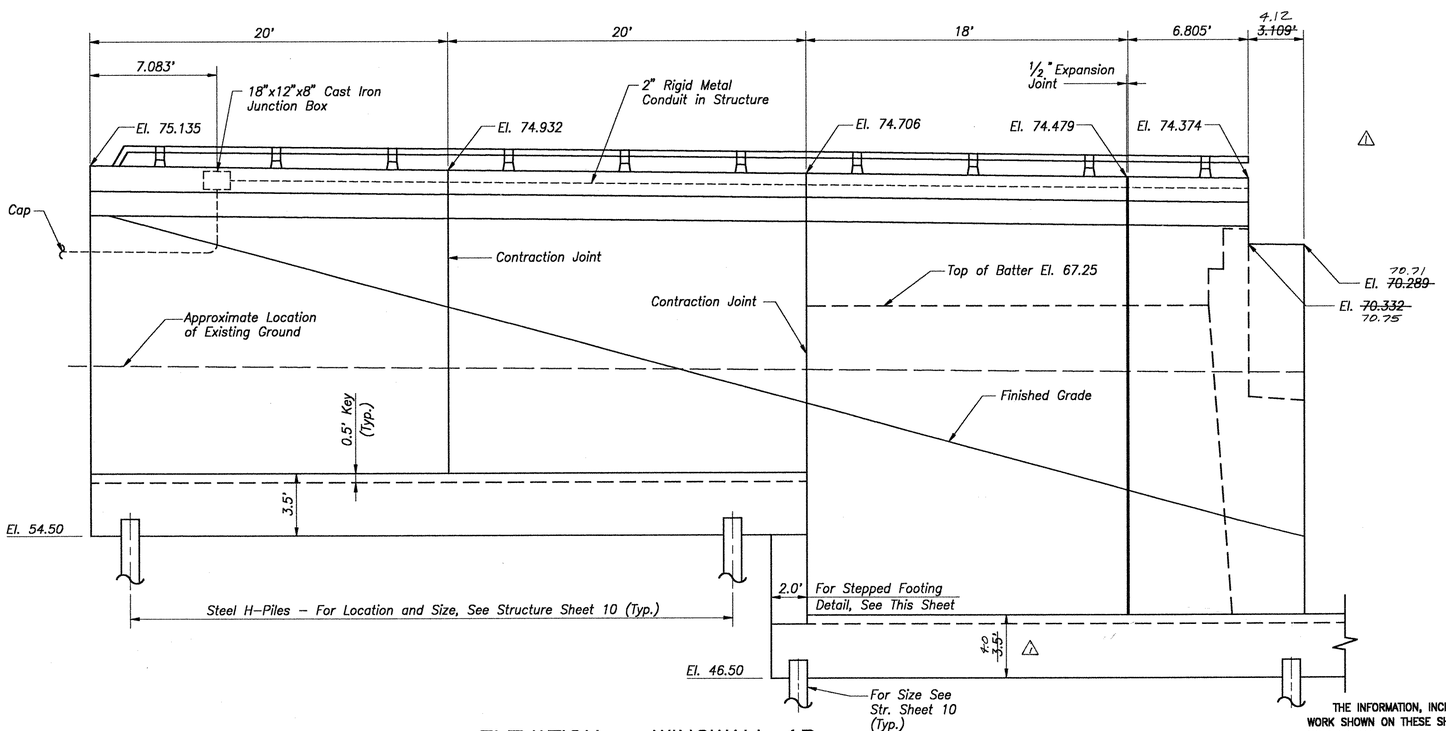

ELEVATION – WINGWALL 1B

Scale: 1/4"=1'-0"

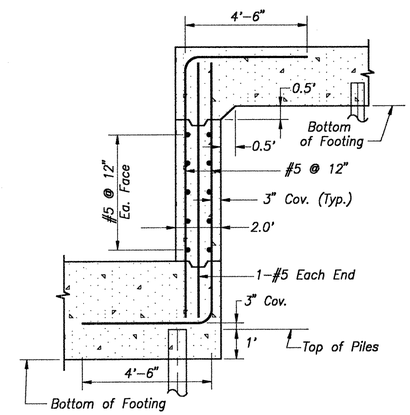

STEPPED FOOTING DETAIL

Not to Scale

△ - As Built Information - July 1995

THE INFORMATION, INCLUDING ESTIMATED QUANTITIES OF WORK SHOWN ON THESE SHEETS IS BASED ON LIMITED INVESTIGATIONS BY THE STATE AND IS IN NO WAY WARRANTED TO INDICATE THE TRUE CONDITIONS OR ACTUAL QUANTITIES OR DISTRIBUTION OF QUANTITIES OF WORK WHICH WILL BE REQUIRED.

NO.	DATE	DESCRIPTION

REVISIONS

CONNECTICUT
DEPARTMENT OF TRANSPORTATION

WETHERSFIELD

MODERNIZATION OF THE ROUTES 3 & I-91 INTERCHANGE

ROUTE 3 E.B. ROADWAY OVER INTERSTATE 91

ABUTMENT 1 – WINGWALL ELEVATIONS

ENGINEER H. W. LOCHNER, INC.

DESIGNER B.B.B. | DRAFTER C.S.F. | CHECKER L.F.

APPROVED [signature] DATE 4/92

STRUCTURE NO. 159-148-4 | BRIDGE LOG NO | STRUCTURE SHEET NO. 6 OF 25

159-148

443-01

139

F.A.H.W.A. REGION NO.	STATE	TOWN	FED. AID PROJ. NO.	PROJ. NO.	YEAR	ROUTE NO.	SHEET NO.	TOTAL SHEETS
1	CONN.	WETHERSFIELD	XAM-1718(2)	159-148	1992	I-91	140	222

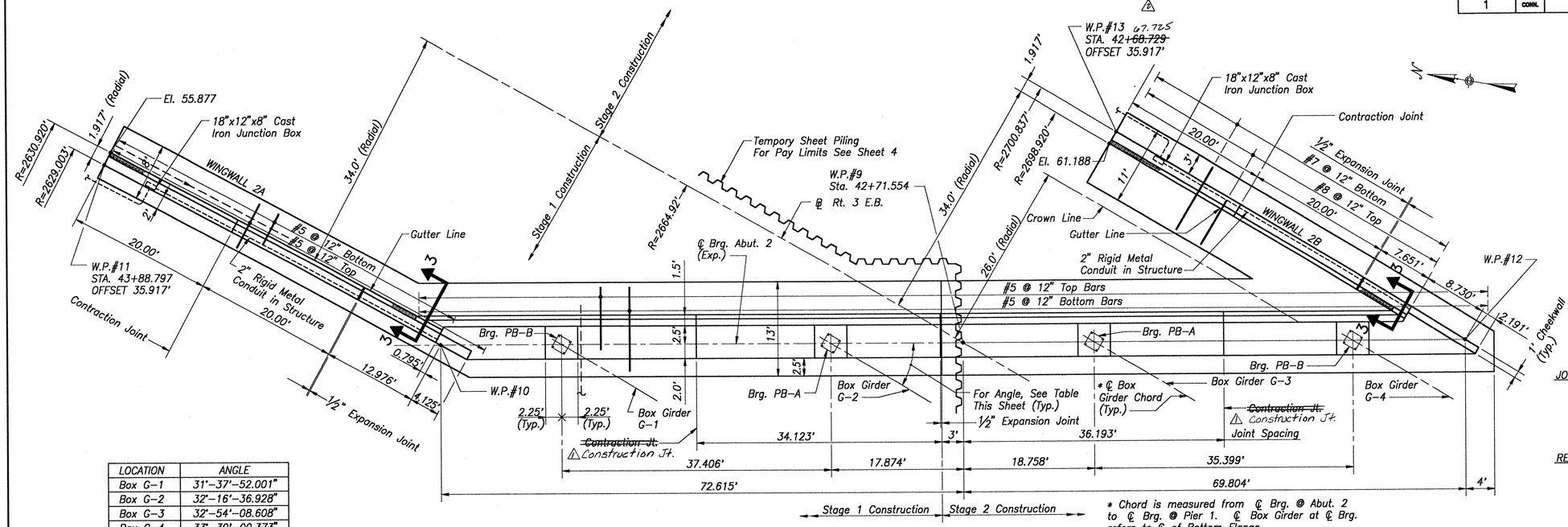

LOCATION	ANGLE
Box G-1	31°-37'-52.001"
Box G-2	32°-16'-36.928"
Box G-3	32°-54'-08.608"
Box G-4	33°-30'-00.373"

PLAN

Scale: 1/8"=1'-0"

* Chord is measured from ℄ Brg. @ Abut. 2 to ℄ Brg. @ Pier 1. ℄ Box Girder at ℄ Brg. refers to ℄ of Bottom Flange.

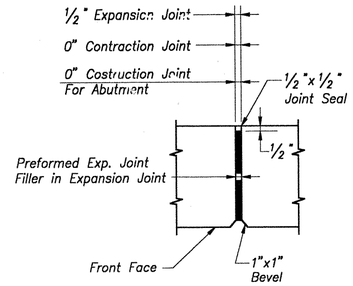

VERTICAL STEM JOINT DETAILS

Not to Scale

JOINT SEAL:
Abutments – Joint seal to extend from top of footing to top of backwall and horizontally along top of backwall.
U-Type Wingwalls – Joint seal to extend from top of footing to top of parapet and horizontally along this joint to outside face of parapet.

REINFORCEMENT:
No reinforcement shall pass through expansion or contraction joints.
Reinforcement shall pass through construction joints.

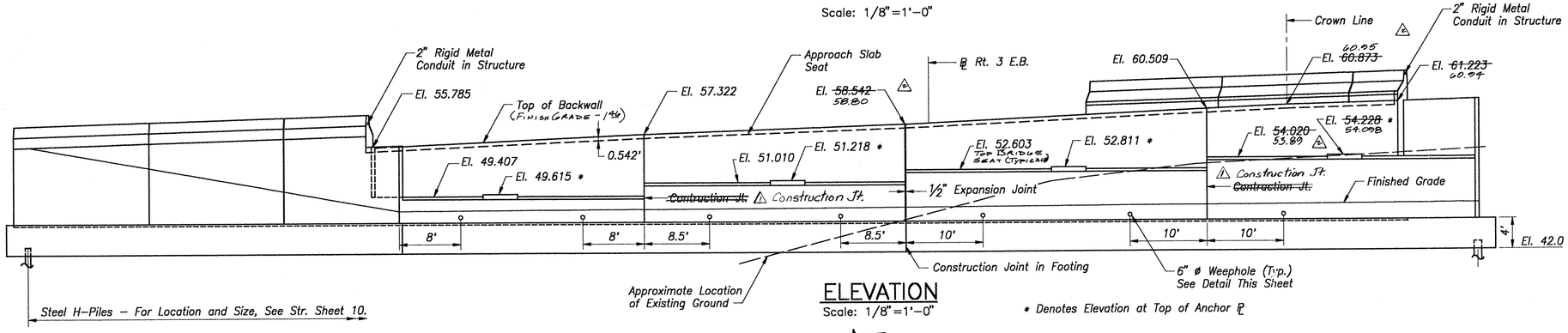

ELEVATION

Scale: 1/8"=1'-0"

* Denotes Elevation at Top of Anchor ℄

Notes:
1. For Abutment and Wingwall Sections, see Structure Sheet 9.
2. For Wingwall Elevation, see Structure Sheet 8.
3. For Anchor ℄ Detail and Non-shrink Grout Pad, see Structure Sheet 5.
4. Wingwall Length Dimensions are Arc Lengths measured along Fascia Line.
5. Gutter Line Elevations as shown indicate Finished Grade Elevations.
6. For Electrical Details, see Structure Sheet 25.
7. For Section 3-3, see Structure Sheet 9.

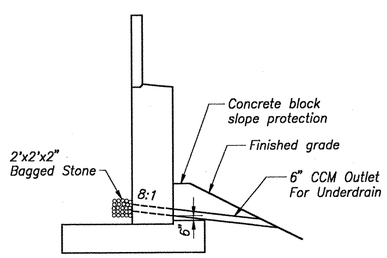

TYPICAL WEEPHOLE DETAIL (AT ABUTMENTS)

Not to Scale

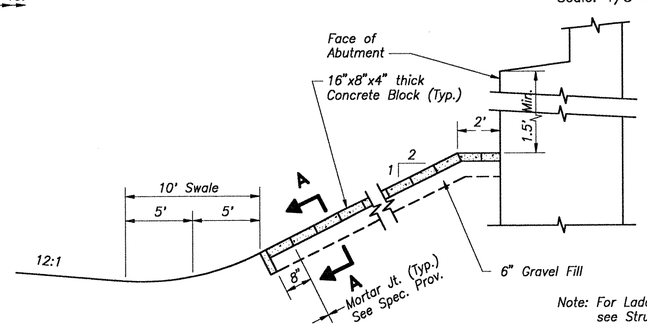

Note: For Ladder Notch Details, see Structure Sheet 8.

SLOPE PROTECTION DETAIL

Not to Scale

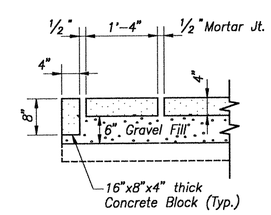

SECTION A-A

△: As Built Information - July 1995

THE INFORMATION, INCLUDING ESTIMATED QUANTITIES OF WORK SHOWN ON THESE SHEETS IS BASED ON LIMITED INVESTIGATIONS BY THE STATE AND IS IN NO WAY WARRANTED TO INDICATE THE TRUE CONDITIONS OR ACTUAL QUANTITIES OR DISTRIBUTION OF QUANTITIES OF WORK WHICH WILL BE REQUIRED.

NO.	DATE	DESCRIPTION
△	1/93	Revised Contraction Jts. to Construction Jts.

REVISIONS

CONNECTICUT
DEPARTMENT OF TRANSPORTATION

WETHERSFIELD

MODERNIZATION OF THE ROUTES 3 & I-91 INTERCHANGE

ROUTE 3 E.B. ROADWAY OVER INTERSTATE 91

ABUTMENT NO. 2

ENGINEER H. W. LOCHNER, INC.
DESIGNER B.B.B. | DRAFTER C.S.F. | CHECKER L.E.
APPROVED | DATE 4/92
STRUCTURE NO. 159-148-4 | BRIDGE LOG NO | STRUCTURE SHEET NO. 7 OF 25

F.H.W.A. REGION NO.	STATE	TOWN	FED. AID PROJ. NO.	PROJ. NO.	YEAR	ROUTE NO.	SHEET NO.	TOTAL SHEETS
1	CONN.	WETHERSFIELD	XAM-1718(2)	159-148	1992	I-91	141	222

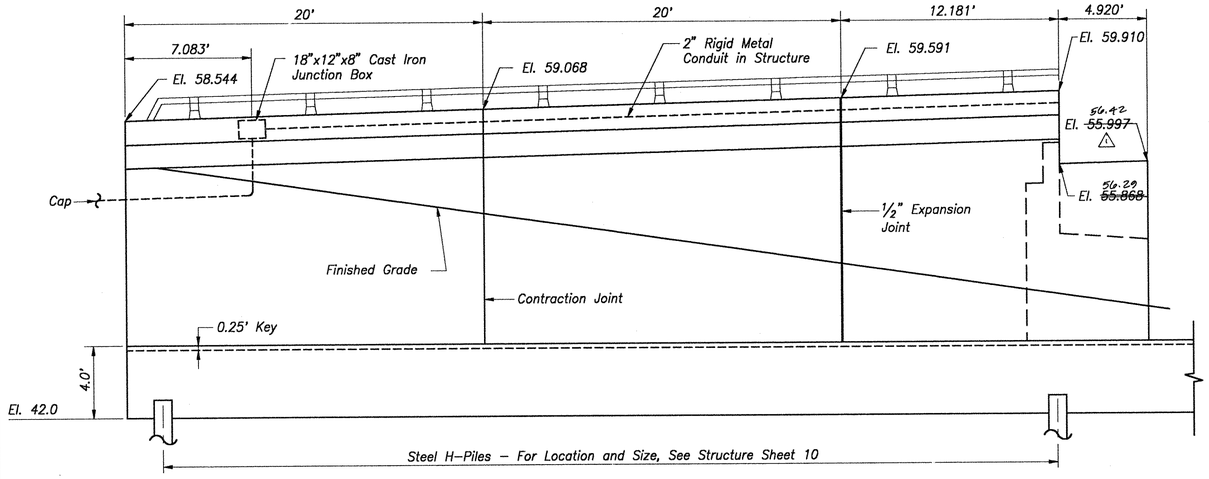

ELEVATION – WINGWALL 2A

Scale: 1/4"=1'-0"

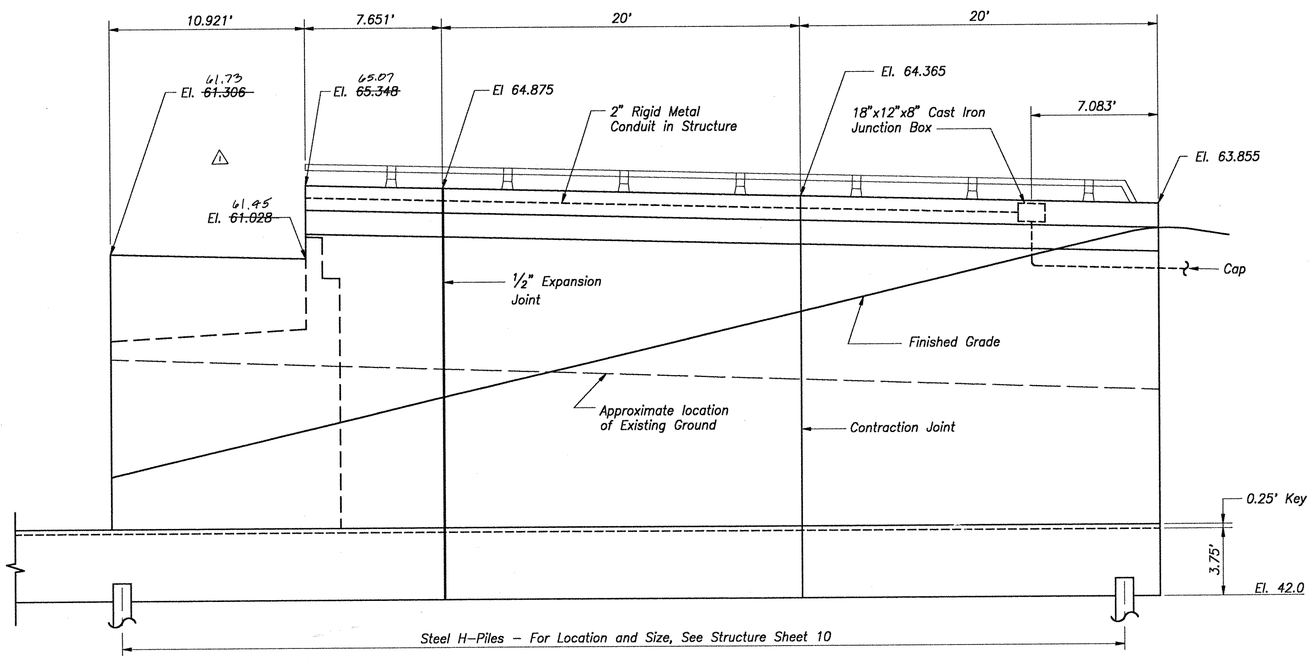

ELEVATION – WINGWALL 2B

Scale: 1/4"=1'-0"

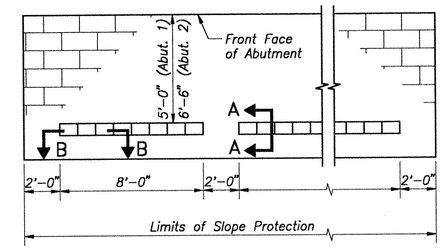

PLAN

Not to Scale

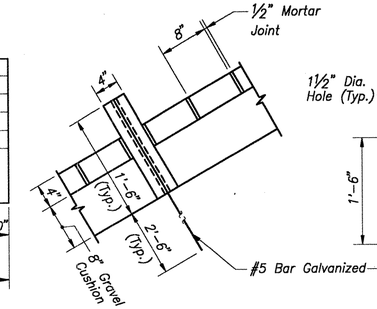

SECTION A–A

Scale: 1"=1'-0"

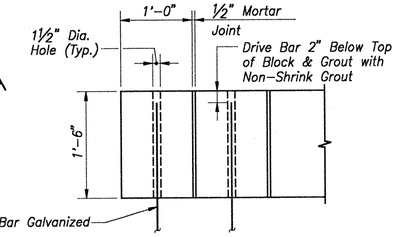

SECTION B–B

Scale: 1"=1'-0"

LADDER NOTCH DETAILS

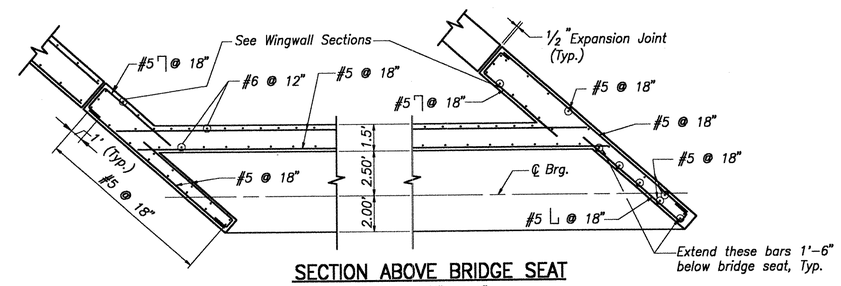

SECTION ABOVE BRIDGE SEAT

Scale: 1/4"=1'-0"

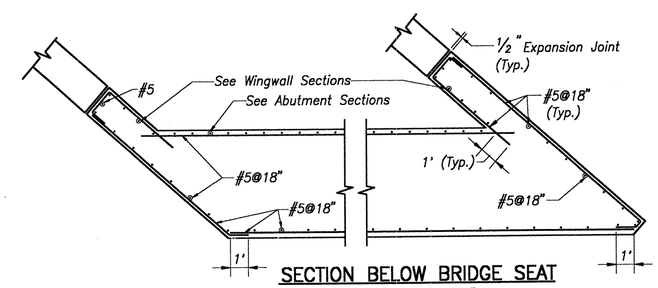

SECTION BELOW BRIDGE SEAT

Scale: 1/4"=1'-0"

ABUTMENT CORNER REINFORCING DETAILS

△ - As Built Information - July 1995

THE INFORMATION, INCLUDING ESTIMATED QUANTITIES OF WORK SHOWN ON THESE SHEETS IS BASED ON LIMITED INVESTIGATIONS BY THE STATE AND IS IN NO WAY WARRANTED TO INDICATE THE TRUE CONDITIONS OR ACTUAL QUANTITIES OR DISTRIBUTION OF QUANTITIES OF WORK WHICH WILL BE REQUIRED.

NO.	DATE	DESCRIPTION

REVISIONS

CONNECTICUT
DEPARTMENT OF TRANSPORTATION

WETHERSFIELD

MODERNIZATION OF THE ROUTES 3 & I-91 INTERCHANGE

ROUTE 3 E.B. ROADWAY OVER INTERSTATE 91

ABUTMENT 2 – WINGWALL ELEVATIONS

ENGINEER H. W. LOCHNER, INC.

DESIGNER B.B.B. | DRAFTER C.S.F. | CHECKER L.E.

APPROVED [signature] DATE 4/92

STRUCTURE NO. 159-148-4 | BRIDGE LOG NO | STRUCTURE SHEET NO. 8 OF 25

F.H.W.A. REGION NO.	STATE	TOWN	FED. AID PROJ. NO.	PROJ. NO.	YEAR	ROUTE NO.	SHEET NO.	TOTAL SHEETS
1	CONN.	WETHERSFIELD	XAM-1718(2)	159-148	1992	I-91	142	222

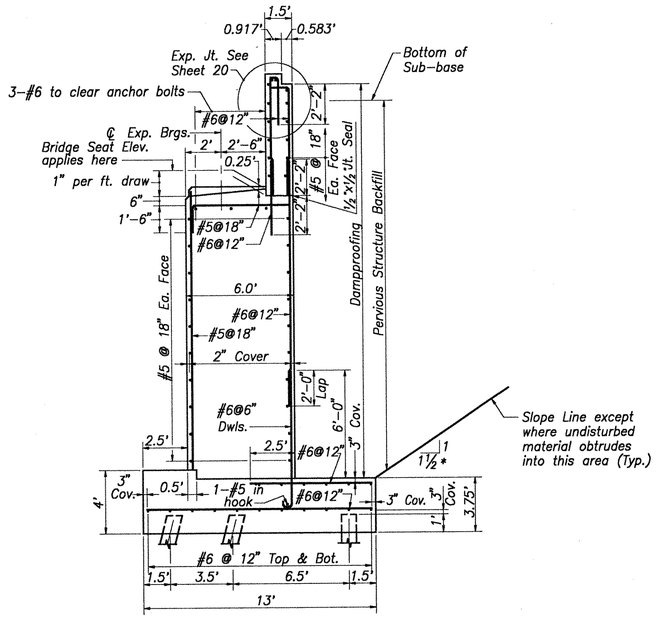

TYPICAL SECTION – ABUTMENT 1

Scale: None

Maximum Design Pile Load = 84 Ton (Group I) + 30 Ton (Downdrag) = 114 Ton
Pile Batter = 3½:12

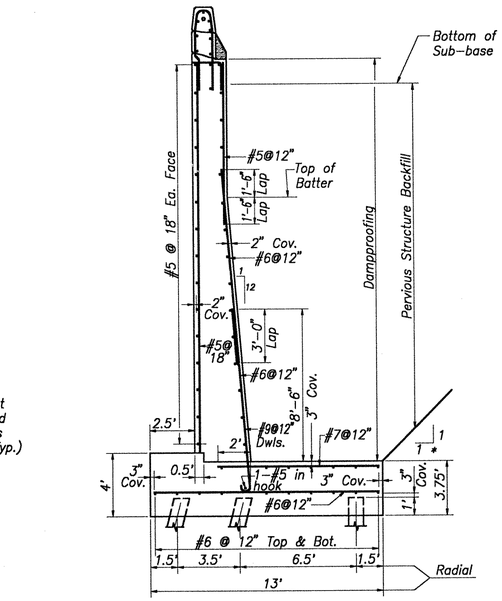

SECTION 1 – WINGWALL 1A & 1B

Scale: None

Maximum Design Pile Load = 76 Ton (Group I) + 30 Ton (Downdrag) = 106 Ton
Pile Batter = 4:12

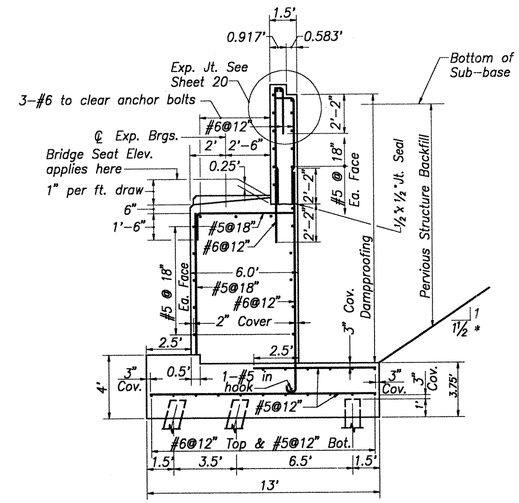

TYPICAL SECTION – ABUTMENT 2

Scale: None

Maximum Design Pile Load = 73 Ton (Group I) + 30 Ton (Downdrag) = 103 Ton
Pile Batter = 2½:12

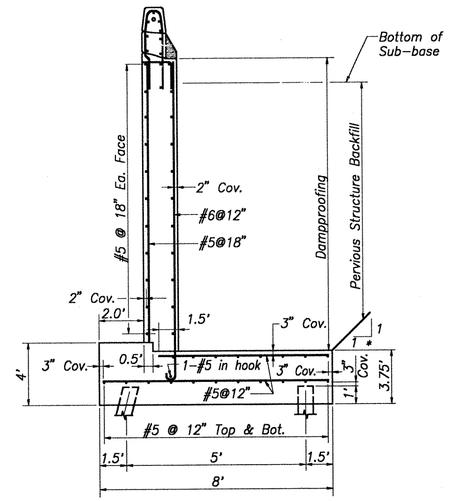

TYPICAL SECTION – WINGWALL 2A

Scale: None

Maximum Design Pile Load = 64 Ton (Group I) + 30 Ton (Downdrag) = 94 Ton
Pile Batter = 4:12

* – *Measured perpendicular to wall.*

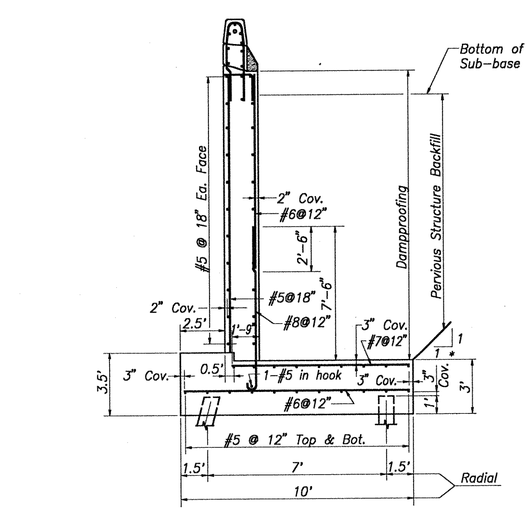

SECTION 2 – WINGWALL 1B

Scale: None

Maximum Design Pile Load = 77 Ton (Group I) + 30 Ton (Downdrag) = 107 Ton
Pile Batter = 3:12

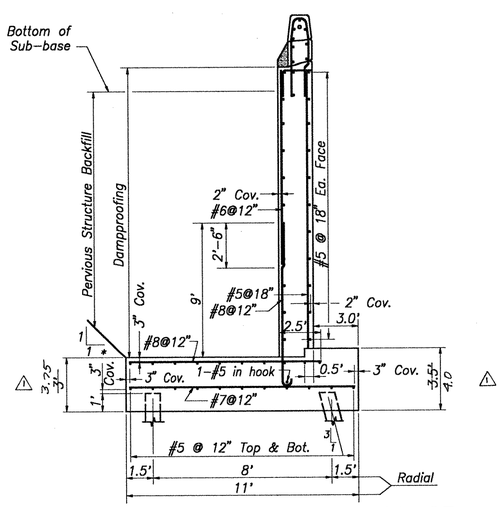

TYPICAL SECTION – WINGWALL 2B

Scale: None

Maximum Design Pile Load = 83 Ton (Group I) + 30 Ton (Downdrag) = 133 Ton
Pile Batter = 4:12

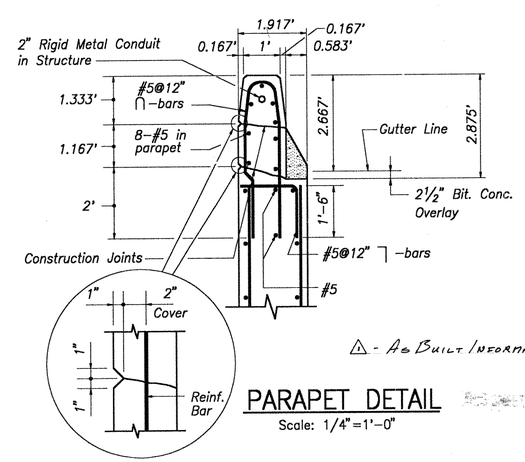

PARAPET DETAIL

Scale: 1/4"=1'-0"

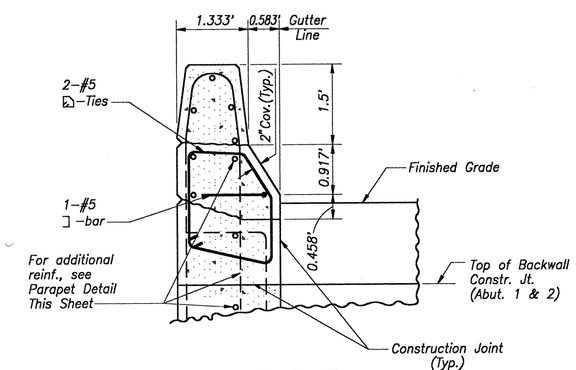

SECTION 3-3

Scale: 3/4"=1'-0"

△ - As Built Information - July 1995

THE INFORMATION, INCLUDING ESTIMATED QUANTITIES OF WORK SHOWN ON THESE SHEETS IS BASED ON LIMITED INVESTIGATIONS BY THE STATE AND IS IN NO WAY WARRANTED TO INDICATE THE TRUE CONDITIONS OR ACTUAL QUANTITIES OR DISTRIBUTION OF QUANTITIES OF WORK WHICH WILL BE REQUIRED.

NO.	DATE	DESCRIPTION

REVISIONS

CONNECTICUT
DEPARTMENT OF TRANSPORTATION

WETHERSFIELD

MODERNIZATION OF THE ROUTES 3 & I-91 INTERCHANGE

ROUTE 3 E.B. ROADWAY OVER INTERSTATE 91

ABUTMENT AND WINGWALL DETAILS

ENGINEER H. W. LOCHNER, INC.
DESIGNER B.B.B. | DRAFTER C.S.F. | CHECKER L.E.
APPROVED [signature] DATE 4/92
STRUCTURE NO. 159-148-4 | BRIDGE LOG NO | STRUCTURE SHEET NO. 9 OF 25

159-148

443-01

142

F.H.W.A. REGION NO.	STATE	TOWN	FED. AID PROJ. NO.	PROJ. NO.	YEAR	ROUTE NO.	SHEET NO.	TOTAL SHEETS
1	CONN.	WETHERSFIELD	XAM-1718(2)	159-148	1992	I-91	143	222

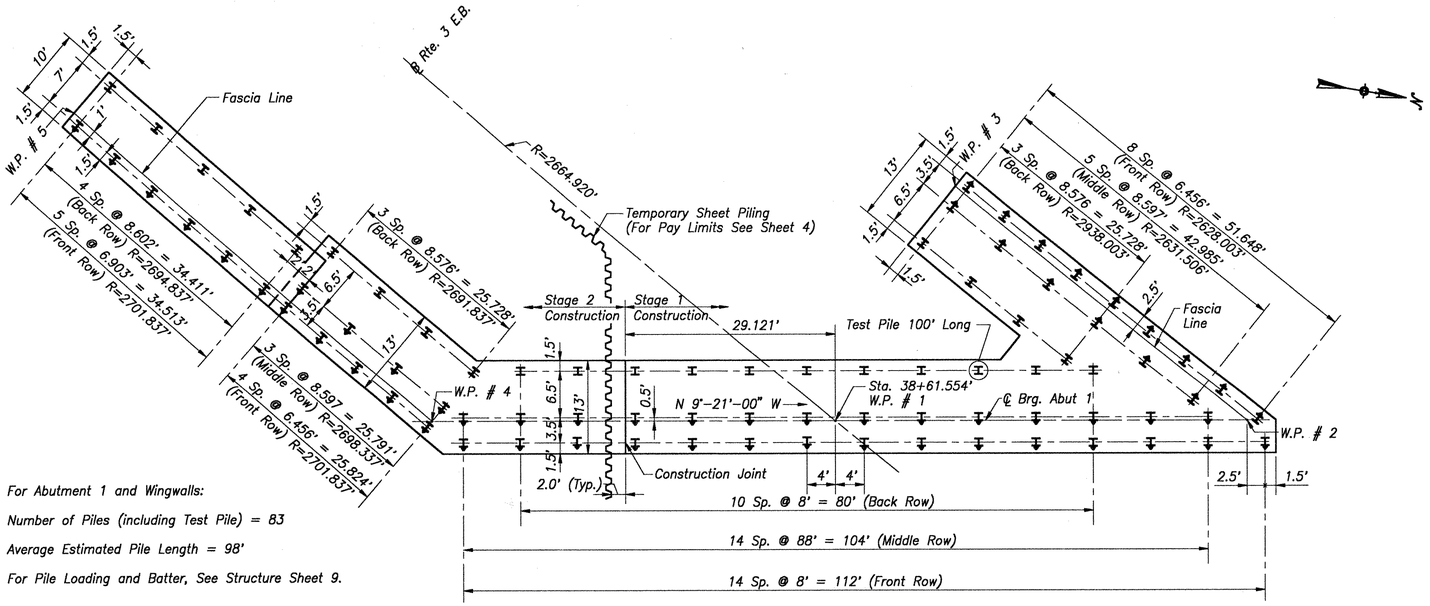

For Abutment 1 and Wingwalls:

Number of Piles (including Test Pile) = 83

Average Estimated Pile Length = 98'

For Pile Loading and Batter, See Structure Sheet 9.

PLAN – ABUTMENT 1

Scale: 1"=10'

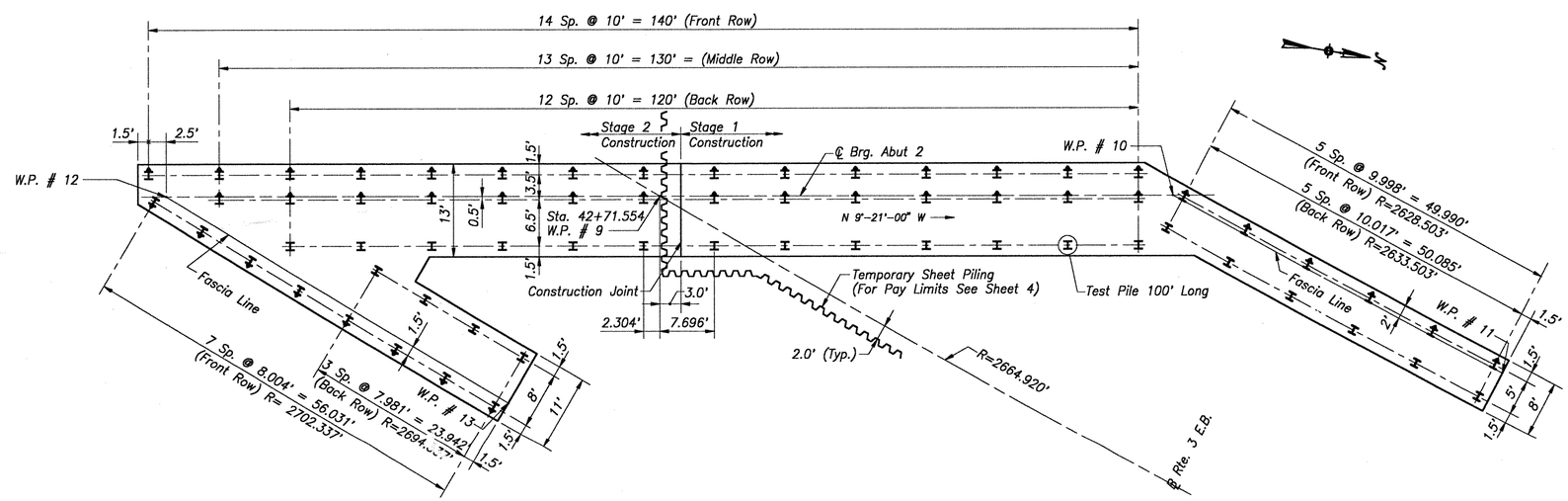

For Abutment 2 and Wingwalls:

Number of Piles (Including Test Pile) = 66

Average Estimated Pile Length = 98'

For Pile Loading and Batter, See Structure Sheet 9.

PLAN – ABUTMENT 2

Scale: 1"=10'

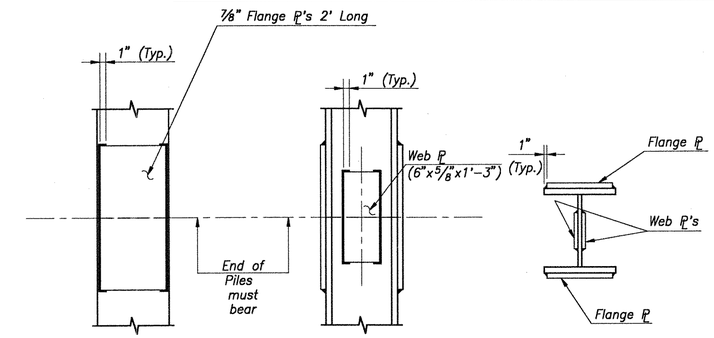

PILE SPLICE DETAIL

Not to Scale

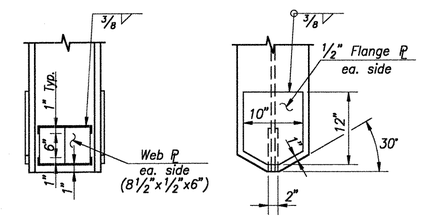

PILE TIP DETAIL

Not to Scale

NOTES

1. Piles shall not be spliced except with approval of the Engineer.
2. For piles to be spliced during installation, the upper pile section, with splice plates attached, shall be set in place on top of the driven section and tapped several times with the hammer to improve the bearing contact after which welding shall be completed.
3. All welding to be 3/8" continuous fillet.
4. Piles to be spliced before driving shall be welded by using a 100% single bevel butt weld all around, as per AASHTO/AWS Bridge Welding Code (D1.5–88).
5. All piles to be HP 12x74.
6. All piles shown thus ⊥ are to be battered in the direction indicated. ↓
7. All piles to be driven to refusal on bedrock.
8. Prefabricated Tip Reinforcing units and/or pile splices may be used with permission of the Engineer.
9. A 3 month surcharge shall be maintained before any piles are driven.

THIS SHEET NOT CORRECTED

THE INFORMATION, INCLUDING ESTIMATED QUANTITIES OF WORK SHOWN ON THESE SHEETS IS BASED ON LIMITED INVESTIGATIONS BY THE STATE AND IS IN NO WAY WARRANTED TO INDICATE THE TRUE CONDITIONS OR ACTUAL QUANTITIES OR DISTRIBUTION OF QUANTITIES OF WORK WHICH WILL BE REQUIRED.

NO.	DATE	DESCRIPTION

REVISIONS

CONNECTICUT
DEPARTMENT OF TRANSPORTATION

WETHERSFIELD

MODERNIZATION OF THE ROUTES 3 & I-91 INTERCHANGE

ROUTE 3 E.B. ROADWAY OVER INTERSTATE 91

PILE PLAN AND DETAILS

ENGINEER H. W. LOCHNER, INC.

DESIGNER B.B.B. | DRAFTER C.S.F. | CHECKER L.E.

APPROVED [signature] DATE 4/92

STRUCTURE NO. 159-148-4 | BRIDGE LOG NO | STRUCTURE SHEET NO. 10 OF 25

F.H.W.A. REGION NO.	STATE	TOWN	FED. AID PROJ. NO.	PROJ. NO.	YEAR	ROUTE NO.	SHEET NO.	TOTAL SHEETS
1	CONN.	WETHERSFIELD	XAM-1718(2)	159-148	1992	I-91	144	222

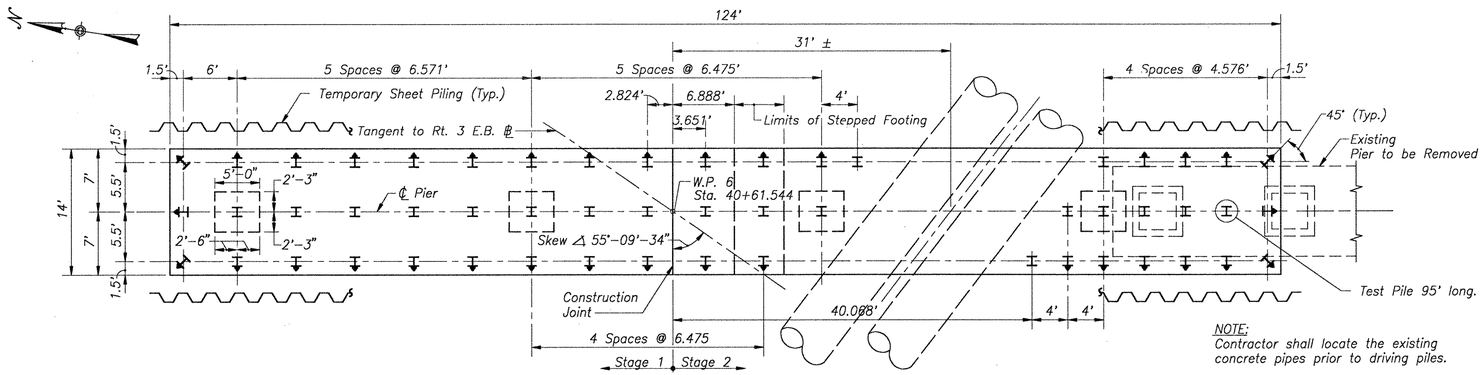

NOTE:
Contractor shall locate the existing concrete pipes prior to driving piles.

FOOTING PLAN

Scale: 1/8"=1'-0"

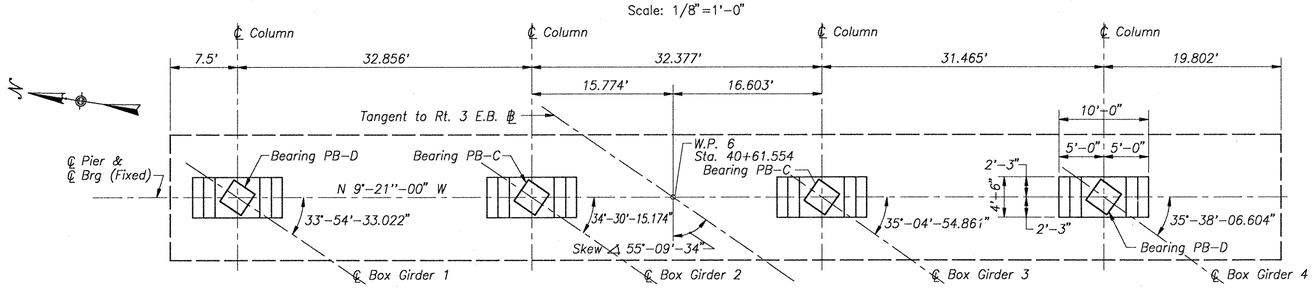

COLUMN PLAN

Scale: 1/8"=1'-0"

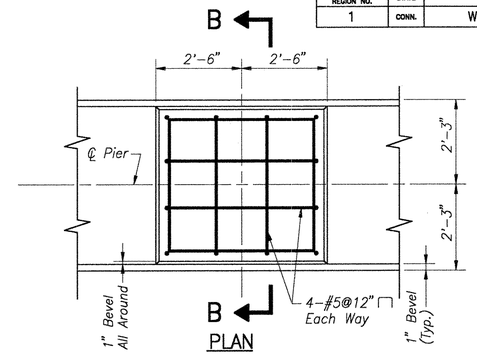

PLAN

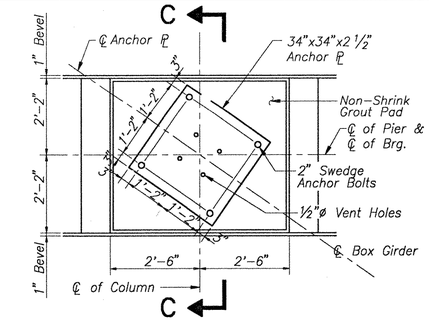

PLAN

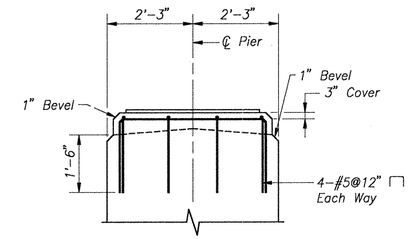

SECTION B-B

CONCRETE PAD DETAIL

Scale: 1/2"=1'-0"

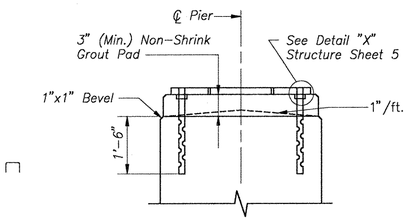

SECTION C-C

ANCHOR PLATE DETAIL

Scale: 1/2"=1'-0"

ANCHOR PLATE NOTES

Anchor bolts shall be cast monolithic with the substructure. No anchor bolt forms shall be used.

The anchor plate shall be set to the correct elevation and leveled by adjusting leveling nuts. After adjustments, burn off bolts flush with top of anchor plate, weld and grind smooth as shown in Detail "X" on Structure Sheet 5.

The base plate of bearing shall be welded to the anchor plate after the bearings are correctly located.

Non-shrink grout shall be placed prior to placing girders.

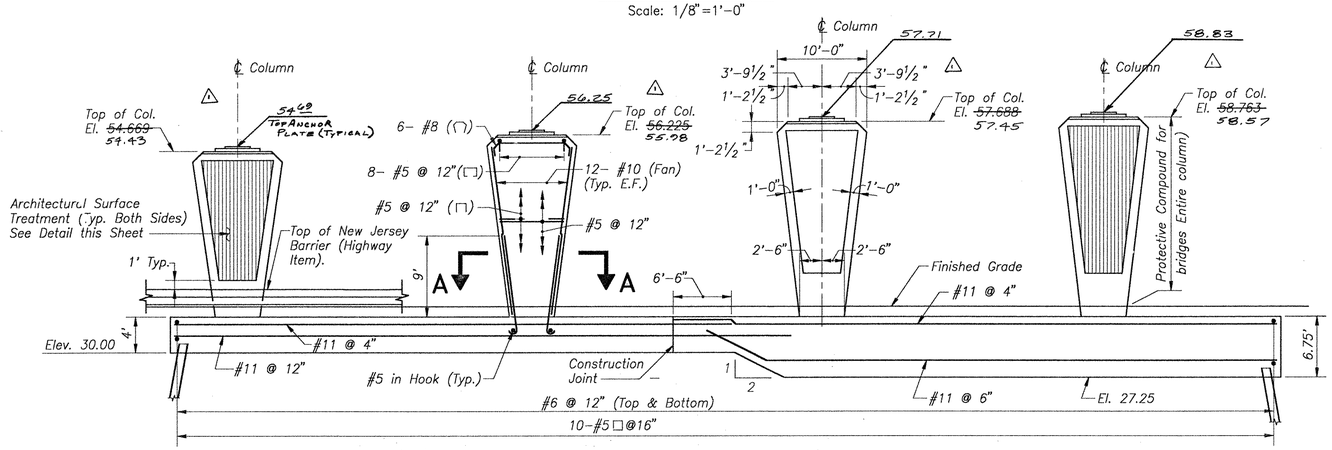

ELEVATION

Scale: 1/8"=1'-0"

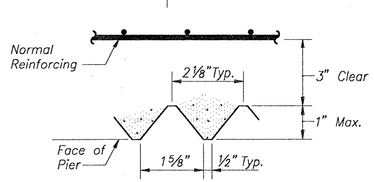

DEEP RIB ARCHITECTURAL TREATMENT

Not to Scale

PILE NOTES

1. Piles Shall Be Driven To Refusal On Bedrock.
2. All Piles To Be HP12x74.
3. ⊥ –Denotes Vertical Piles.
4. ⊥ –Denotes Piles Battered 1:3 In The Direction Of The Arrow.
5. Number of Piles – 54
6. Maximum Design Pile Load = 77 Tons (Group III)
7. Pile Dimensions Apply at Bottom of Footing.
8. Average Estimated Pile Length = 85 feet.
9. For Pile Splice and Pile Tip Details, see Structure Sheet 10.

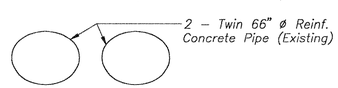

REINFORCING NOTES

1. All reinforcement including metallic ties or supports for reinforcement, in the bottom of footings with piles shall have three (3) inches minimum clearance from piles.
2. All other reinforcement to have 3" cover except as otherwise noted.
3. All reinforcement in columns including dowels extending from the footing shall be epoxy coated.

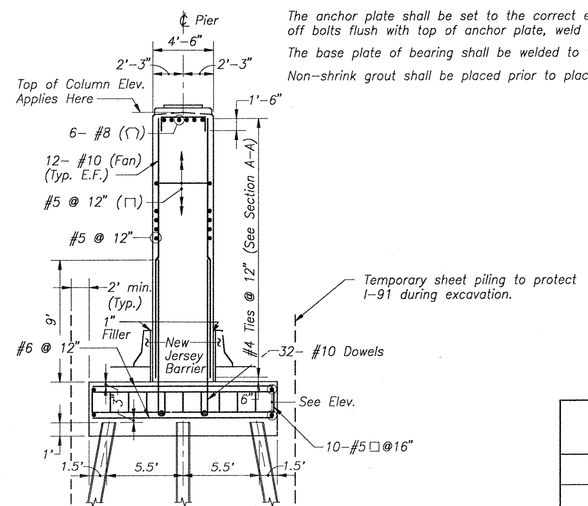

TYPICAL SECTION AT COLUMN

Scale: 3/16"=1'-0"

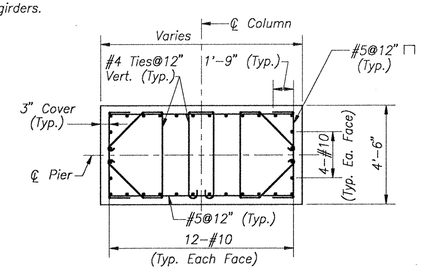

SECTION A-A

Not to Scale

∆ - As Built Information - July 1995

THE INFORMATION, INCLUDING ESTIMATED QUANTITIES OF WORK SHOWN ON THESE SHEETS IS BASED ON LIMITED INVESTIGATIONS BY THE STATE AND IS IN NO WAY WARRANTED TO INDICATE THE TRUE CONDITIONS OR ACTUAL QUANTITIES OR DISTRIBUTION OF QUANTITIES OF WORK WHICH WILL BE REQUIRED.

NO.	DATE	DESCRIPTION

REVISIONS

CONNECTICUT
DEPARTMENT OF TRANSPORTATION

WETHERSFIELD

MODERNIZATION OF THE ROUTES 3 & I-91 INTERCHANGE

ROUTE 3 E.B. ROADWAY OVER INTERSTATE 91

PIER NO. 1

ENGINEER H. W. LOCHNER, INC.

DESIGNER S.R.A. | DRAFTER R.J.F. | CHECKER L.E.

APPROVED [signature] DATE 4/92

STRUCTURE NO. 159-148-4 | BRIDGE LOG NO | STRUCTURE SHEET NO. 11 OF 25

F.H.W.A. REGION NO.	STATE	TOWN	FED. AID PROJ. NO.	PROJ. NO.	YEAR	ROUTE NO.	SHEET NO.	TOTAL SHEETS
1	CONN.	WETHERSFIELD	XAM-1718(2)	159-148	1992	I-91	145	222

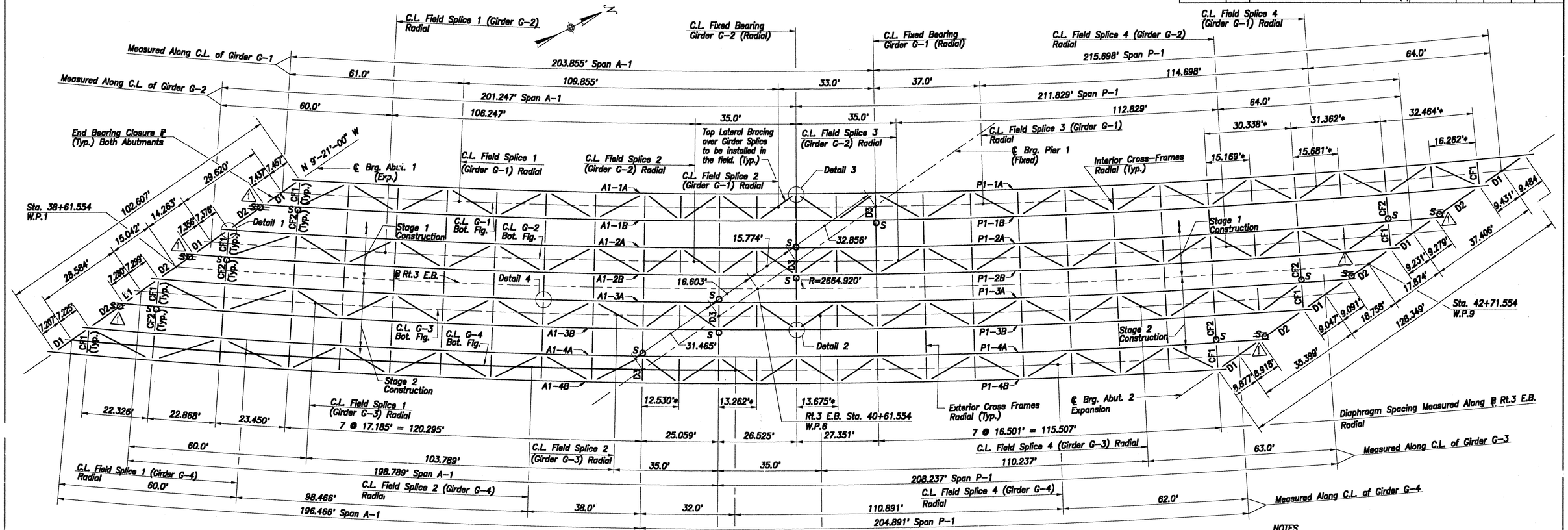

* Denotes Diaphragm Spacing Measured Along ℞ Rt. 3 E.B. Diaphragms are placed Radially.

FRAMING PLAN

Scale: 1/16"=1'-0"

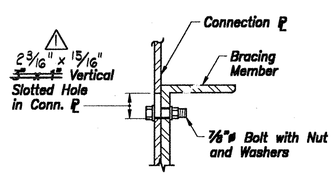

SLOTTED ERECTION BOLT DETAIL

Not to Scale

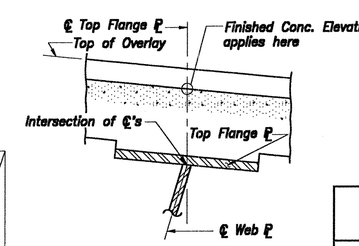

DETAIL OF FINISHED CONCRETE ELEVATION

Not to Scale

△2 - As Built Information - July 1995

TOP OF FINISHED CONCRETE ELEVATIONS ALONG ℄ TOP FLANGE AT ℄ WEB

	WEB ℙ MARK	LENGTH INCRE.	℄ BRG. ABUT. 1	1/19	2/19	3/19	4/19	5/19	6/19	7/19	8/19	9/19	10/19	11/19	12/19	13/19	14/19	15/19	16/19	17/19	18/19	19/19	℄ BRG PIER
SPAN A1	A1-1A	10.226	67.989	67.785	67.574	67.356	67.130	66.898	66.658	66.412	66.158	65.897	65.630	65.362	65.095	64.828	64.560	64.293	64.025	63.758	63.490	63.223	62.956
	A1-1B	10.159	68.602	68.408	68.207	67.999	67.784	67.562	67.333	67.098	66.855	66.605	66.349	66.085	65.821	65.556	65.291	65.026	64.762	64.497	64.232	63.968	63.703
	A1-2A	10.094	69.203	69.018	68.827	68.629	68.424	68.213	67.995	67.769	67.538	67.299	67.053	66.801	66.541	66.279	66.017	65.755	65.493	65.231	64.969	64.707	64.444
	A1-2B	10.031	69.792	69.617	69.436	69.247	69.052	68.851	68.643	68.428	68.206	67.978	67.743	67.502	67.254	66.999	66.739	66.479	66.220	65.960	65.700	65.441	65.181
	A1-3A	9.969	70.370	70.205	70.032	69.854	69.668	69.476	69.278	69.073	68.861	68.643	68.419	68.188	67.950	67.706	67.455	67.198	66.941	66.684	66.427	66.170	65.913
	A1-3B	9.910	70.938	70.781	70.618	70.448	70.272	70.090	69.901	69.705	69.504	69.295	69.081	68.860	68.633	68.399	68.159	67.912	67.659	67.404	67.149	66.895	66.640
	A1-4A	9.852	71.496	71.347	71.193	71.032	70.865	70.691	70.512	70.326	70.133	69.935	69.730	69.519	69.301	69.078	68.848	68.611	68.369	68.120	67.867	67.615	67.362
△2	A1-4B	9.795	~~71.457~~ 71.351	71.380	71.235	71.082	70.924	70.759	70.589	70.412	70.229	70.039	69.851	69.642	69.449	69.220	69.000	68.774	68.541	68.303	68.058	67.807	67.557

	WEB ℙ MARK	LENGTH INCRE.	℄ BRG PIER	1/20	2/20	3/20	4/20	5/20	6/20	7/20	8/20	9/20	10/20	11/20	12/20	13/20	14/20	15/20	16/20	17/20	18/20	19/20	20/20	℄ BRG. ABUT. 2
SPAN P1	P1-1A	10.320	62.956	62.686	62.416	62.146	61.876	61.606	61.337	61.067	60.797	60.527	60.257	59.987	59.717	59.448	59.178	58.908	58.638	58.368	58.098	57.828	57.559	57.289
	P1-1B	10.224	63.703	63.436	63.170	62.904	62.637	62.371	62.104	61.838	61.571	61.305	61.039	60.772	60.506	60.239	59.973	59.706	59.440	59.174	58.907	58.641	58.374	58.108
	P1-2A	10.132	64.444	64.181	63.918	63.655	63.392	63.129	62.866	62.603	62.340	62.077	61.813	61.550	61.287	61.024	60.791	60.498	60.235	59.972	59.709	59.446	59.182	58.919
	P1-2B	10.043	65.181	64.920	64.662	64.402	64.142	63.882	63.622	63.362	63.102	62.842	62.583	62.323	62.063	61.803	61.543	61.283	61.023	60.764	60.504	60.244	59.984	59.724
	P1-3A	9.957	65.913	65.656	65.399	65.143	64.886	64.629	64.372	64.115	63.859	63.602	63.345	63.088	62.832	62.575	62.318	62.061	61.804	61.548	61.291	61.034	60.777	60.521
	P1-3B	9.875	66.640	66.386	66.132	65.879	65.625	65.371	65.117	64.863	64.610	64.356	64.102	63.848	63.595	63.341	63.087	62.833	62.580	62.326	62.072	61.818	61.564	61.311
	P1-4A	9.795	67.362	67.111	66.861	66.610	66.359	66.108	65.858	65.606	65.355	65.105	64.854	64.603	64.352	64.101	63.850	63.599	63.349	63.098	62.847	62.596	62.345	62.094
	P1-4B	9.718	67.557	67.309	67.061	66.813	66.565	66.317	66.069	65.821	65.573	65.325	65.077	64.829	64.581	64.333	64.085	63.837	63.589	63.341	63.093	62.845	62.597	62.349

NOTES

1. For girder details, see Structure Sheet 13.
2. For details of field splice, see Structure Sheet 16.
3. For Pot Bearing details, see Structure Sheet 17.
4. Temporary bracing used for erection shall be removed after the erection phase has been completed and approved by the Engineer.
5. For Sections, Cross Frames, Bearing Closure Plates and Connection Details, see Structure Sheets 14 & 15.
6. For Structural Steel notes, see Structure Sheet 13.
7. All Dimensions are Horizontal.
8. Top Lateral Bracing over Girder Splice shall be installed in the field.
9. In the vicinity of the abutments and pier, the end of the cross frames CF2 ~~and diaphragm D2~~ marked with "S" shall have slotted ~~erection~~ bolt holes. These bolts shall be finger tight until after the placement of the deck when these connections can be welded see Detail this sheet.
10. Cross Frame and Diaphragms between Girders G-2 and G-3 shall be installed in the field during Stage 2 Construction.

△

NO.	DATE	DESCRIPTION
△	3-17-93	REVISE SLOTTED HOLES

REVISIONS

CONNECTICUT
DEPARTMENT OF TRANSPORTATION

WETHERSFIELD

MODERNIZATION OF THE ROUTES 3 & I-91 INTERCHANGE

ROUTE 3 E.B. ROADWAY OVER INTERSTATE 91

FRAMING PLAN

ENGINEER H. W. LOCHNER, INC.

DESIGNER S.R.A. | DRAFTER C.S.F. | CHECKER L.E.

APPROVED [signature] DATE 4/92

STRUCTURE NO. 159-148-4 | BRIDGE LOG NO | STRUCTURE SHEET NO. 12 OF 25

159-148 443-01 145

F.H.W.A. REGION NO.	STATE	TOWN	FED. AID PROJ. NO.	PROJ. NO.	YEAR	ROUTE NO.	SHEET NO.	TOTAL SHEETS
1	CONN.	WETHERSFIELD	XAM-1718(2)	159-148	1992	I-91	146	222

BOX GIRDER SCHEDULE

BOX GIRDER DESIGNATION	SPAN LENGTH ℄ TO ℄ BEARING (Ft.) (Measur. ● ℄ of Box Girder) L 1	L 2	RADIUS AT ℄ OF BOX △ (Ft.)	WEB PLATE (Inch)	TOP FLANGE PLATES A Size (Inch.)	A Length (Ft.)	B Size (Inch.)	B Length (Ft.)	C Size (Inch.)	C Length (Ft.)	D Size (Inch.)	D Length (Ft.)	E Size (Inch.)	E Length (Ft.)	F Size (Inch.)	F Length (Ft.)	G Size (Inch.)	G Length (Ft.)
G-1	203.855	215.698	~~2,637.170~~	80x 5/8	16x1	40	16x1 1/2	118.855	24x1 7/8	20	36x2 5/8	50	24x1 7/8	20	18x1 1/2	130.698	16x1	40
G-2	201.247	211.829	~~2,655.670~~	80x 5/8	16x1	40	16x1 1/2	116.247	24x1 7/8	20	36x2 5/8	50	24x1 7/8	20	18x1 1/2	126.829	16x1	40
G-3	198.789	208.237	~~2,674.170~~	80x 5/8	16x1	40	16x1 1/2	113.789	24x1 7/8	20	36x2 5/8	50	24x1 7/8	20	18x1 1/2	123.237	16x1	40
G-4	196.466	204.891	2,692.670	80x 5/8	16x1	40	16x1 1/2	111.466	24x1 7/8	20	36x2 5/8	50	24x1 7/8	20	18x1 1/2	119.891	16x1	40

BOTTOM FLANGE PLATES	A' Size (Inch.)	A' Length (Ft.)	B' Size (Inch.)	B' Length (Ft.)	C' Size (Inch.)	C' Length (Ft.)	D' Size (Inch.)	D' Length (Ft.)	E' Size (Inch.)	E' Length (Ft.)	F' Size (Inch.)	F' Length (Ft.)	G' Size (Inch.)	G' Length (Ft.)
G-1	92 1/2x3/4	40	92 1/2x1	118.855	92 1/2x1 1/2	20	92 1/2x2	50	92 1/2x1 1/2	20	92 1/2x1	130.698	92 1/2x3/4	40
G-2	92 1/2x3/4	40	92 1/2x1	116.247	92 1/2x1 1/2	20	92 1/2x2	50	92 1/2x1 1/2	20	92 1/2x1	126.829	92 1/2x3/4	40
G-3	92 1/2x3/4	40	92 1/2x1	113.789	92 1/2x1 1/2	20	92 1/2x2	50	92 1/2x1 1/2	20	92 1/2x1	123.237	92 1/2x3/4	40
G-4	92 1/2x3/4	40	92 1/2x1	111.466	92 1/2x1 1/2	20	92 1/2x2	50	92 1/2x1 1/2	20	92 1/2x1	119.891	92 1/2x3/4	40

BOX GIRDER	NEGATIVE MOMENT ZONE SPAN A-1	SPAN P-1
G-1	66	60
G-2	64	59
G-3	63	59
G-4	62	59

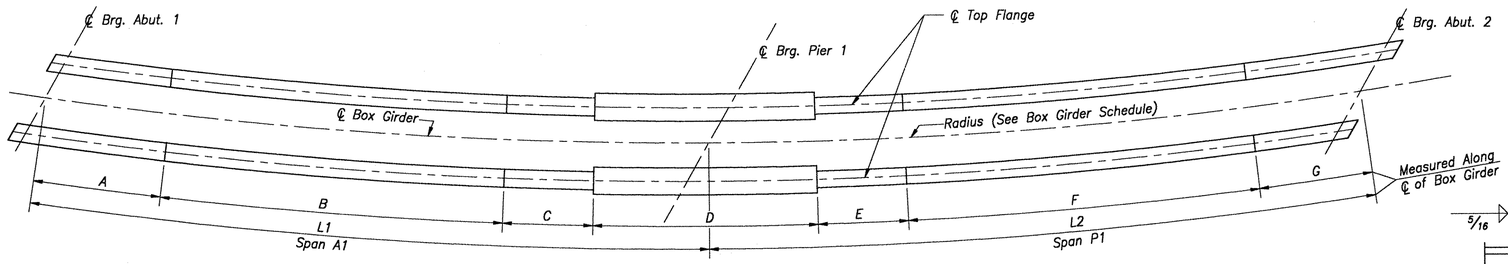

PLAN – TOP FLANGE

Not to Scale

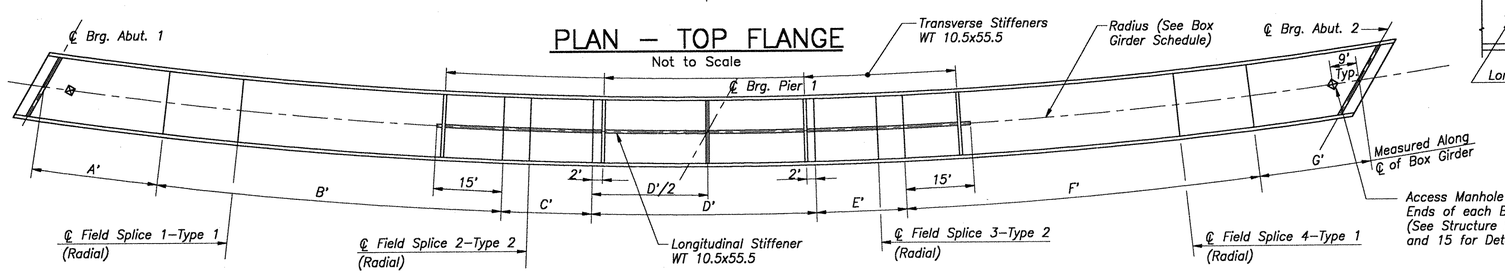

PLAN – BOTTOM FLANGE

Not to Scale

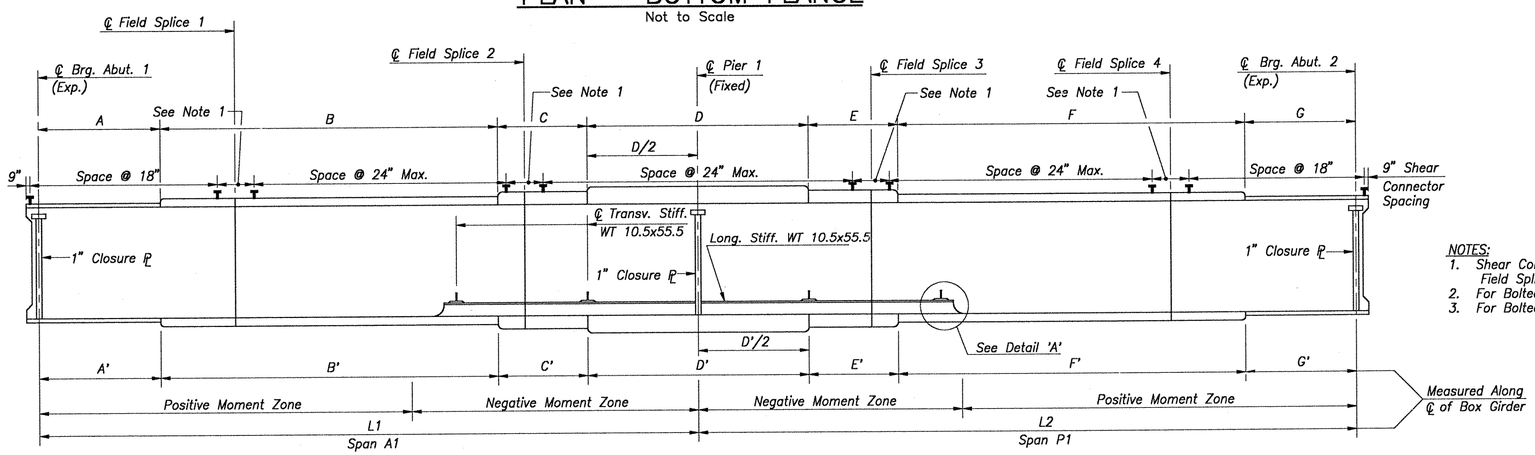

TYPICAL BOX GIRDER SECTION

Not to Scale

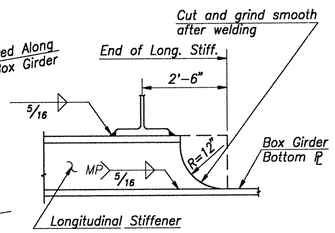

DETAIL "A"

Not to Scale

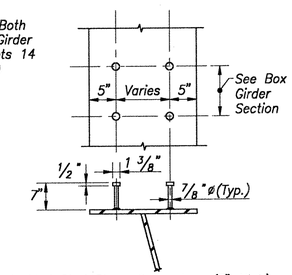

STUD SHEAR CONNECTOR DETAIL

Not to Scale

NOTES:

1. Shear Connectors to clear bolts at location of Field Splices. Space at 24".
2. For Bolted Field Splice location, See Structure Sheet 12.
3. For Bolted Field Splice Details, See Structure Sheet 16.

NOTES:

1. Structural Steel (Low Alloy) shall conform to ASTM A709 Grade 50W.
2. Welding details, procedures and testing methods shall conform to the AASHTO/AWS Bridge Welding Code (D1.5–88).
3. Bolted field splices, other than those indicated on the plans, will not be allowed except with the written permission of the Engineer prior to the submission of shop plans. If allowed, these splices shall be designed by the Contractor and approved by the Engineer. The cost of these splices, including the cost of design, shall be at no extra expense to the State.
4. All welded girders shall be fabricated to the required horizontal curvature by cutting the flanges from larger size plates. Heat curving will not be allowed. The Contractor shall indicate on his shop drawings the location of any additional splices required in order to minimize the amount of waste. However, written approval by the Engineer for any additional splices must be obtained prior to the submission of shop plans.
5. All shop and field groove welds in the web and flanges shall be completely inspected by radiographic or ultrasonic testing and finished smooth and flush with the base metal on all surfaces by grinding in the direction of applied stress leaving the surfaces free from depressions. Chipping may be used provided it is followed by such grinding. (The grinding shall not reduce the thickness of the base metal by more than 1/32 of an inch nor five percent (5%) of the thickness, whichever is smaller.
6. All web to flange fillet welds shall be inspected by the magnetic particle method. At least one (1) foot of every ten (10) foot length of fillet weld and one (1) foot of each fillet weld less than ten (10) feet in length shall be tested. At bearing stiffener closure plates all fillet welds shall be inspected in their entirety by the magnetic particle method. If unacceptable discontinuities are found in any test length of weld, the full length of the weld, or five (5) feet on either side of the test length, whichever is less, shall be tested.
7. Multiple pass welds, inspected by the magnetic particle methed shall have each pass or layer inspected and accepted before proceeding to the next pass or layer, as determined by the Engineer.
8. Shop flange splices shall be located a minimum of six (6) inches from web splices.
9. Stiffeners and connection plantes shall be located a minimum of six (6) inches from flange or web splices.
10. Bearing stiffeners and the ends of girders shall be vertical after the application of full dead loads.
11. Intermediate stiffeners shall be placed only on inside face of box girder.
12. The structural steel fabricators shall be certified under AISC Quality Control Program, Category III, Major Steel Bridges.
13. It shall be the Contractor's responsibility to provide any additional temporary bracing required to maintain the geometry of the individual box girders, as well as the total steel structure, throughout all phases of construction including placement of the concrete deck.

△ - As Built Information - July 1995

AS BUILT NOT CORRECTED

NO.	DATE	DESCRIPTION

REVISIONS

CONNECTICUT
DEPARTMENT OF TRANSPORTATION

WETHERSFIELD

MODERNIZATION OF THE ROUTES 3 & I-91 INTERCHANGE

ROUTE 3 E.B. ROADWAY OVER INTERSTATE 91

BOX GIRDER DETAILS

ENGINEER H. W. LOCHNER, INC.
DESIGNER S.R.A. | DRAFTER R.J.F. | CHECKER L.E.
APPROVED [signature] DATE 4/92
STRUCTURE NO. 159-148-4 | BRIDGE LOG NO | STRUCTURE SHEET NO. 13 OF 25

159-148

443-01

146

STATE OF CONNECTICUT - DEPT. OF TRANSPORTATION

FORM NO. ENG. 158 ED 3-86

F.H.W.A. REGION NO.	STATE	TOWN	FED. AID PROJ. NO.	PROJ. NO.	YEAR	ROUTE NO.	SHEET NO.	TOTAL SHEETS
1	CONN.	WETHERSFIELD	IXAM-1718(2)	159-148	1992	I-91	147	222

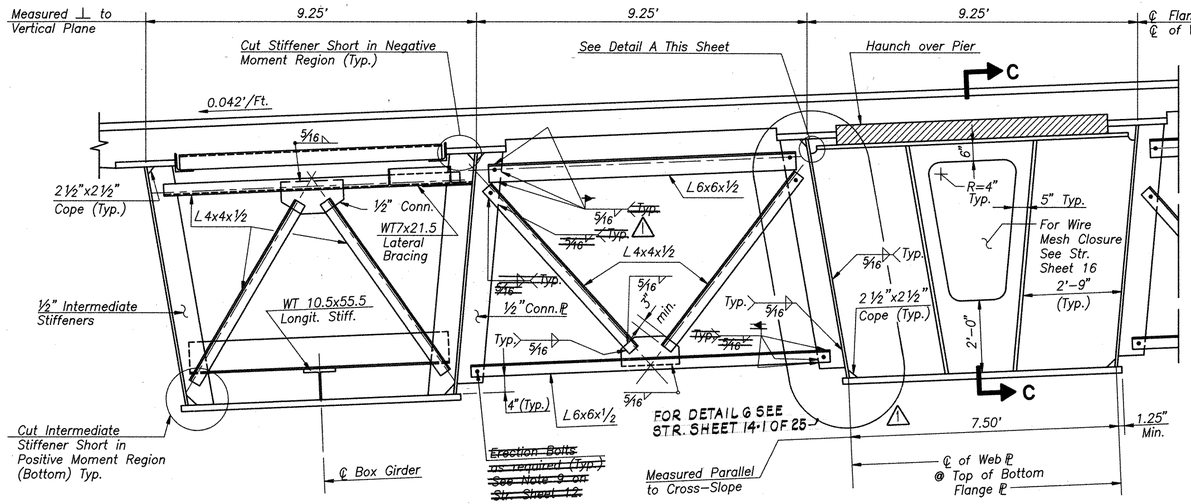

TYPICAL CROSS FRAME DETAILS

Scale: 1/2" =1'-0"

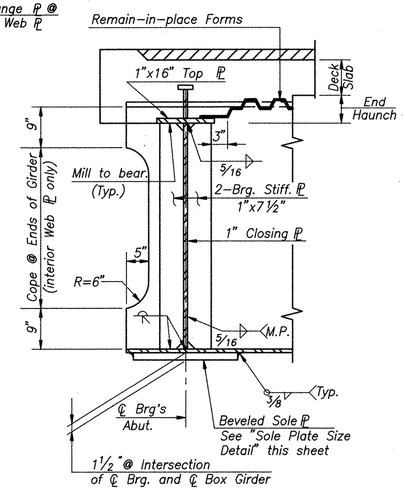

SECTION A-A
(SEE SHEET 15)

Scale: None

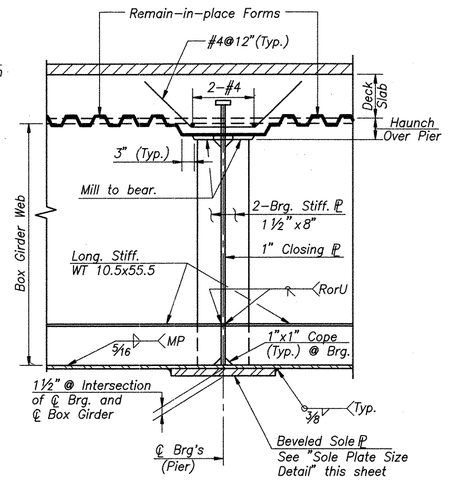

SECTION C-C

Scale: 3/4"=1'-0"

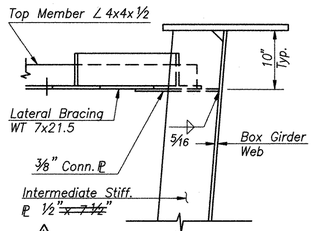

SECTION D-D

Scale: 1"=1'-0"

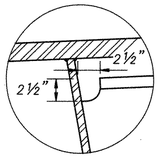

DETAIL A

Not to Scale

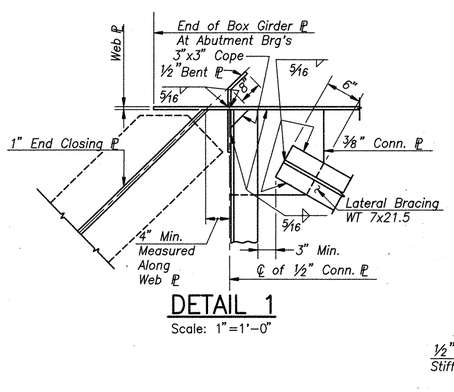

DETAIL 1

Scale: 1"=1'-0"

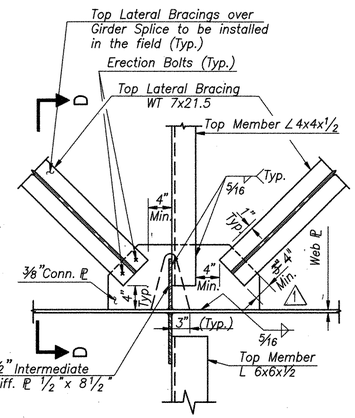

DETAIL 2

Scale: 1"=1'-0"

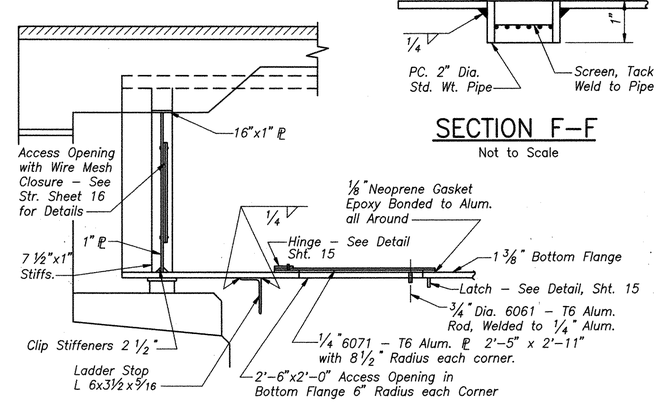

SECTION E-E

Not to Scale

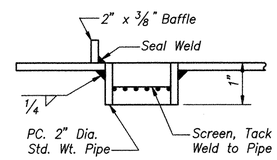

SECTION F-F

Not to Scale

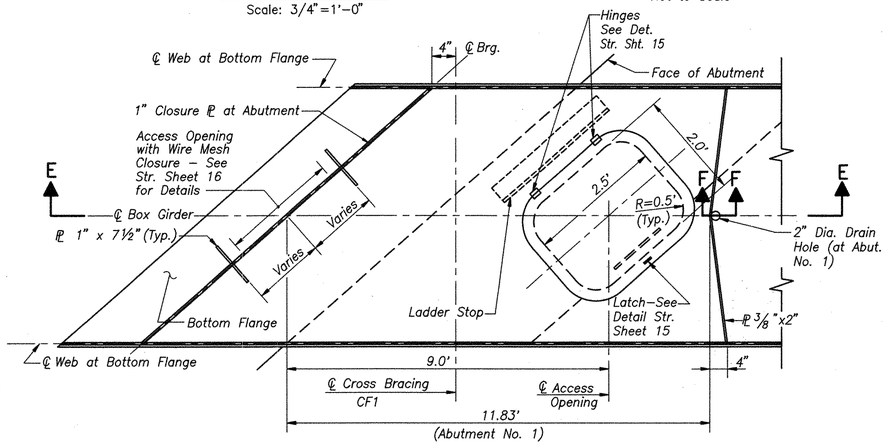

PLAN - ACCESS MANHOLE

Scale: None

THIS SHEET NOT CORRECTED

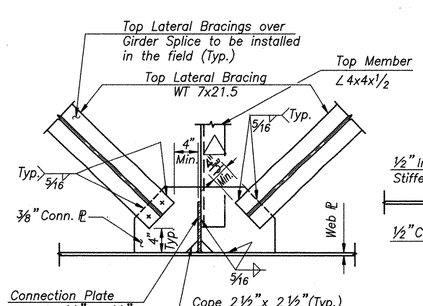

DETAIL 3

Scale: 1"=1'-0"

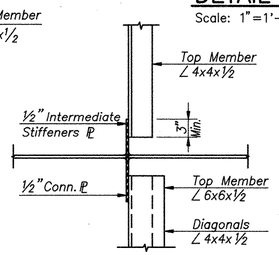

DETAIL 4

Scale: 1"=1'-0"

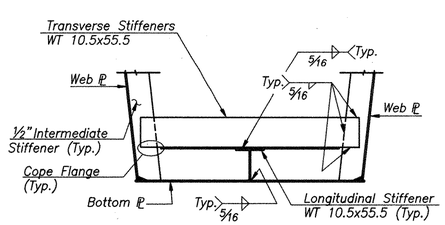

TRANSVERSE STIFFENER DETAIL

Scale: 1/2" =1'-0"

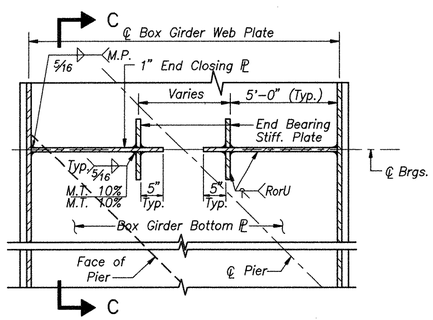

SECTION B-B

Scale: None

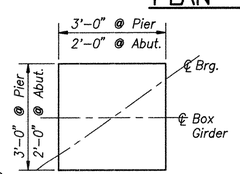

SOLE PLATE SIZE DETAIL

Scale: 3/4" =1'-0"

NO.	DATE	DESCRIPTION
1	3-10-93	CHANGE FIELD WELDS TO BOLTS AT CONN. ℙ

REVISIONS

CONNECTICUT
DEPARTMENT OF TRANSPORTATION

WETHERSFIELD

ROUTE 3 E.B. ROADWAY OVER INTERSTATE 91

FRAMING DETAILS

ENGINEER H. W. LOCHNER, INC.
DESIGNER S.R.A. DRAFTER C.S.F. CHECKER L.E.
APPROVED DATE 4/92
STRUCTURE NO. 159-148-4 BRIDGE LOG NO. STRUCTURE SHEET NO. 14 OF 25

F.H.W.A. REGION NO.	STATE	TOWN	FED. AID PROJ. NO.	PROJ. NO.	YEAR	ROUTE NO.	SHEET NO.	TOTAL SHEETS
1	CONN.	WETHERSFIELD	IXAM-1718(2)	159-148	1992	I-91	147-1	222

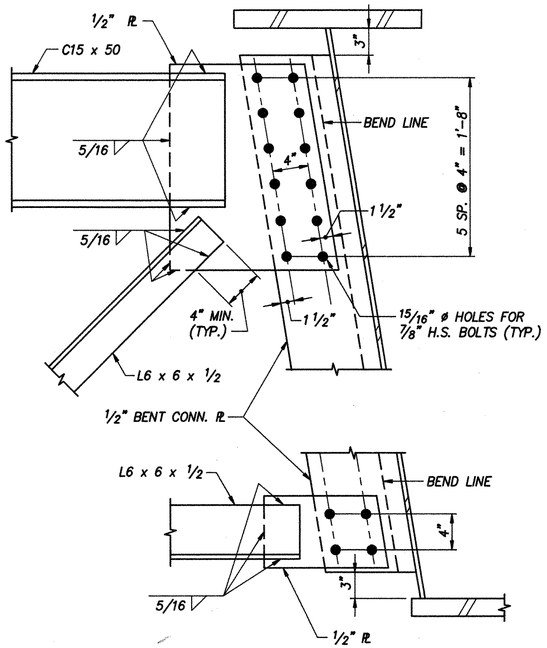

DETAIL 5
SCALE: 1 1/2" = 1'-0"

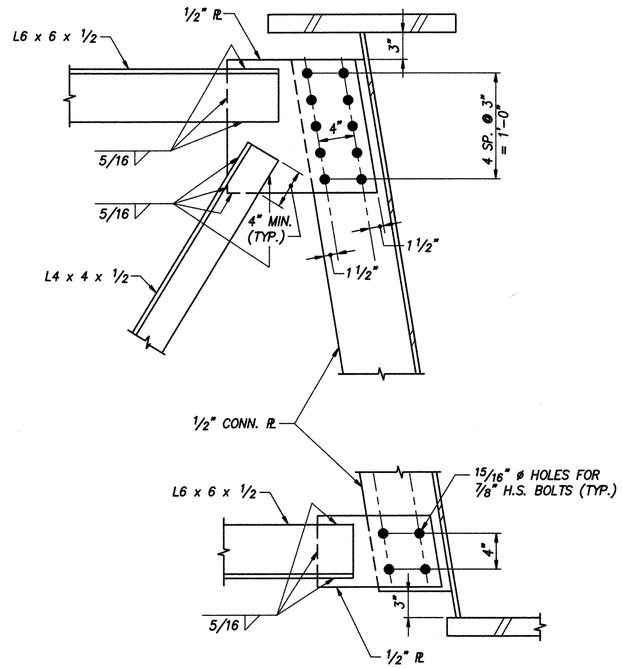

DETAIL 6
SCALE: 1 1/2" = 1'-0"

THIS SHEET NOT CORRECTED

"THIS SHEET ADDED"
DATE: ~~3-16-93~~ CORRECTED

CONNECTICUT
DEPARTMENT OF TRANSPORTATION

WETHERSFIELD

MODERNIZATION OF ROUTES I-91/3 INTERCHANGE
ROUTE 3 E.B. ROADWAY
OVER
INTERSTATE 91

EXTERNAL CROSS FRAME CONNECTION DETAILS

NO.	DATE	DESCRIPTION

REVISIONS

ENGINEER H. W. LOCHNER, INC.

DESIGNER B.B.B. | DRAFTER R.J.F. | CHECKER L.E.

APPROVED [signature] DATE 3/93

STRUCTURE NO. 159-148-4 | BRIDGE LOG NO. | STRUCTURE SHEET NO. 14-1 OF 25

CAMBERS FOR CONTINUOUS GIRDER (FT.)

WEB ℄ MARK	ITEM	℄ BRG. ABUT. 1	1	2	3	4	5	6	7	8	9	10	11	12	13	14	15	16	17	18	19	℄ BRG. PIER
A1–1A	Struct. Steel	.012	.032	.050	.065	.077	.086	.092	.093	.091	.086	.077	.067	.054	.041	.028	.017	.008	.002	–.001	–.001	.004
	Other D.L.	.041	.110	.173	.226	.270	.301	.321	.328	.323	.307	.280	.245	.203	.158	.114	.073	.040	.016	.002	0	.010
	Total D.L.	.053	.142	.223	.291	.347	.387	.413	.421	.414	.393	.357	.312	.257	.199	.142	.090	.048	.018	.001	–.001	.014
P1–1A	V.C. Ordinate	0	.047	.088	.121	.147	.167	.179	.184	.182	.173	.158	.142	.126	.110	.095	.079	.063	.047	.032	.016	0
	Tot. Camber	.053	.189	.311	.412	.494	.554	.592	.605	.596	.566	.515	.454	.383	.309	.237	.169	.111	.065	.033	.017	.014
A1–1B	Struct. Steel	–.012	.009	.029	.047	.063	.075	.085	.091	.093	.092	.087	.080	.070	.058	.045	.032	.020	.010	.003	–.001	–.001
	Other D.L.	–.040	.030	.099	.162	.217	.262	.296	.318	.328	.326	.312	.288	.255	.215	.171	.126	.085	.049	.022	.005	0
	Total D.L.	–.052	.039	.128	.209	.280	.337	.381	.409	.421	.418	.399	.368	.325	.273	.216	.158	.105	.059	.025	.004	–.001
P1–1B	V.C. Ordinate	0	.051	.095	.132	.162	.185	.201	.210	.212	.208	.196	.178	.158	.139	.119	.099	.079	.059	.040	.020	0
	Tot. Camber	.052	.090	.223	.341	.442	.522	.582	.619	.633	.626	.595	.546	.483	.412	.335	.257	.184	.118	.065	.024	–.001
A1–2A	Struct. Steel	.011	.033	.048	.063	.074	.083	.088	.090	.088	.083	.075	.065	.053	.040	.028	.017	.008	.002	–.001	0	.004
	Other D.L.	.039	.105	.165	.217	.258	.289	.308	.315	.311	.293	.269	.236	.197	.154	.111	.072	.040	.017	.003	0	.010
	Total D.L.	.050	.138	.213	.280	.332	.372	.396	.405	.399	.376	.344	.301	.250	.194	.139	.089	.048	.019	.002	0	.014
P1–2A	V.C. Ordinate	0	.053	.100	.140	.173	.200	.219	.232	.238	.237	.229	.215	.194	.170	.145	.121	.097	.073	.048	.024	0
	Tot. Camber	.050	.191	.313	.420	.505	.572	.615	.637	.637	.613	.573	.516	.444	.364	.284	.210	.145	.092	.050	.024	.014
A1–2B	Struct. Steel	–.011	.008	.027	.045	.060	.072	.082	.087	.090	.089	.084	.077	.067	.056	.044	.031	.020	.011	.004	0	0
	Other D.L.	–.039	.029	.095	.156	.209	.251	.284	.305	.315	.313	.299	.275	.245	.208	.166	.123	.083	.049	.023	.006	0
	Total D.L.	–.050	.037	.122	.201	.269	.323	.366	.392	.405	.402	.383	.352	.312	.264	.210	.154	.103	.060	.027	.006	0
P1–2B	V.C. Ordinate	0	.056	.104	.147	.182	.211	.234	.249	.258	.260	.256	.245	.227	.203	.174	.145	.116	.087	.058	.029	0
	Tot. Camber	–.050	.093	.226	.348	.451	.534	.600	.641	.663	.662	.639	.597	.539	.467	.384	.299	.219	.147	.085	.035	0
A1–3A	Struct. Steel	.011	.030	.047	.061	.058	.081	.087	.088	.087	.083	.075	.066	.055	.043	.031	.021	.012	.005	.001	0	.003
	Other D.L.	.003	.100	.157	.207	.248	.277	.295	.303	.299	.284	.261	.230	.193	.153	.113	.077	.046	.022	.007	.001	.007
	Total D.L.	.014	.130	.204	.268	.306	.358	.382	.391	.386	.367	.337	.296	.248	.196	.144	.078	.058	.027	.008	.001	.010
P1–3A	V.C. Ordinate	0	.057	.108	.152	.189	.220	.244	.262	.274	.279	.277	.269	.254	.232	.205	.171	.137	.103	.068	.034	0
	Tot. Camber	.014	.187	.312	.420	.495	.578	.626	.653	.660	.646	.614	.565	.502	.428	.349	.249	.195	.130	.076	.035	.010
A1–3B	Struct. Steel	–.011	.008	.027	.044	.059	.071	.080	.171	.088	.088	.084	.077	.068	.058	.046	.034	.023	.014	.007	.004	0
	Other D.L.	–.037	.028	.091	.149	.199	.242	.272	.293	.302	.300	.289	.267	.237	.202	.164	.124	.087	.054	.029	.011	~~.002~~
	Total D.L.	–.048	.036	.118	.193	.258	.313	.352	.464	.390	.388	.373	.344	.305	.260	.210	.158	.110	.068	.036	.015	~~.002~~
P1–3B	V.C. Ordinate	0	.058	.110	.155	.194	.226	.252	.271	.285	.291	.292	.285	.273	.254	.229	.197	.159	.119	.080	.040	0
	Tot. Camber	–.048	.094	.228	.348	.452	.539	.604	.735	.675	.679	.665	.629	.578	.514	.439	.355	.269	.187	.116	.005	.002
A1–4A	Struct. Steel	.010	.028	.044	.059	.070	.078	.083	.085	.084	.080	.073	.064	.053	.042	.031	.021	.012	.006	.001	0	.002
	Other D.L.	.035	.096	.152	.200	.238	.266	.284	.291	.288	.275	.252	.222	.187	.149	.111	.076	.046	.023	.007	.001	.006
	Total D.L.	.045	.124	.196	.259	.308	.344	.367	.376	.372	.355	.325	.286	.240	.192	.142	.097	.058	.029	.008	.001	.008
P1–4A	V.C. Ordinate	0	.058	.110	.156	.196	.229	.256	.277	.291	.299	.301	.296	.285	.268	.245	.215	.179	.137	.091	.046	0
	Tot. Camber	.045	.182	.306	.415	.504	.573	.623	.653	.663	.654	.626	.582	.525	.460	.387	.312	.237	.166	.099	.047	.008
A1–4B	Struct. Steel	–.010	.008	.026	.042	.057	.068	.077	.082	.085	.085	.081	.075	.066	.056	.048	.034	.023	.014	.007	.002	0
	Other D.L.	–.035	.027	.088	.144	.193	.232	.262	.282	.291	.290	.278	.258	.230	.196	.159	.121	.085	.054	.029	.011	.002
	Total D.L.	–.045	.035	.114	.186	.250	.300	.339	.364	.376	.375	.359	.333	.296	.252	.207	.155	.108	.068	.036	.013	.002
P1–4B	V.C. Ordinate	0	.058	.110	.156	.196	.229	.257	.278	.293	.302	.304	.301	.291	.275	.253	.225	.191	.150	.103	.052	0
	Tot. Camber	–.045	.093	.224	.342	.446	.529	.596	.642	.669	.677	.663	.634	.587	.527	.460	.380	.299	.218	.139	.065	.002

WEB ℄ MARK	ITEM	1	2	3	4	5	6	7	8	9	10	11	12	13	14	15	16	17	18	19	℄ BRG. ABUT.2
A1–1A	Struct. Steel	.013	.025	.041	.059	.078	.097	.114	.129	.141	.149	.151	.149	.142	.130	.114	.093	.067	.038	.007	–.025
	Other D.L.	.034	.045	.116	.170	.228	.287	.341	.388	.425	.499	.460	.455	.434	.388	.349	.285	.207	.119	.023	–
	Total D.L.	.047	.070	.157	.229	.306	.384	.455	.517	.566	.598	.611	.604	.576	.518	.463	.378	.274	.157	.030	–
P1–1A	V.C. Ordinate	0	0	0	0	0	0	0	0	0	0	0	0	0	0	0	0	0	0	0	0
	Tot. Camber	.047	.070	.157	.229	.036	.384	.455	.517	.566	.598	.611	.604	.576	.435	.463	.378	.274	.157	.030	–
A1–1B	Struct. Steel	.002	.010	.021	.036	.053	.071	.090	.108	.124	.137	.146	.151	.151	.146	.136	.122	.103	.080	.053	.024
	Other D.L.	.006	.026	.058	.100	.151	.208	.266	.322	.371	.412	.441	.463	.457	.445	.417	.374	.317	.250	.164	.073
	Total D.L.	.008	.036	.079	.136	.204	.279	.356	.430	.495	.549	.587	.614	.608	.591	.553	.496	.420	.330	.217	.097
P1–1B	V.C. Ordinate	0	0	0	0	0	0	0	0	0	0	0	0	0	0	0	0	0	0	0	0
	Tot. Camber	.008	.036	.079	.136	.204	.279	.356	.430	.495	.549	.587	.614	.608	.591	.553	.496	.420	.330	.217	.097
A1–2A	Struct. Steel	.012	.023	.037	.054	.071	.089	.105	.119	.130	.137	.140	.138	.132	.121	.105	.086	.062	.036	.007	–.022
	Other D.L.	.031	.063	.105	.155	.209	.263	.300	.358	.392	.415	.424	.420	.401	.369	.323	.264	.192	.110	.021	–.067
	Total D.L.	.043	.086	.142	.209	.280	.352	.405	.477	.522	.552	.564	.558	.533	.490	.428	.350	.254	.146	.028	–.089
P1–2A	V.C. Ordinate	0	0	0	0	0	0	0	0	0	0	0	0	0	0	0	0	0	0	0	0
	Tot. Camber	.043	.086	.142	.209	.280	.352	.405	.477	.522	.552	.564	.558	.533	.490	.428	.350	.254	.146	.028	–.089
A1–2B	Struct. Steel	.002	.009	.019	.032	.048	.065	.083	.099	.114	.126	.135	.139	.139	.135	.126	.113	.095	.074	.049	.022
	Other D.L.	.005	.023	.052	.104	.139	.191	.245	.296	.342	.380	.407	.422	.424	.411	.385	.345	.293	.228	.151	.067
	Total D.L.	.007	.032	.071	.136	.187	.256	.328	.395	.456	.506	.542	.561	.563	.546	.511	.458	.388	.302	.200	.089
P1–2B	V.C. Ordinate	0	0	0	0	0	0	0	0	0	0	0	0	0	0	0	0	0	0	0	0
	Tot. Camber	.007	.032	.071	.136	.187	.256	.328	.395	.456	.506	.542	.561	.563	.546	.511	.458	.388	.302	.200	.089
A1–3A	Struct. Steel	.009	.018	.030	.045	.061	.077	.090	.105	.115	.122	.125	.123	.118	.108	.095	.078	.057	.032	.007	–.002
	Other D.L.	.024	.052	.090	.134	.184	.233	.280	.321	.353	.375	.385	.381	.365	.336	.294	.241	.176	.101	.021	–.061
	Total D.L.	.033	.070	.120	.179	.245	.310	.370	.426	.468	.497	.510	.504	.483	.444	.389	.319	.233	.133	.028	–.063
P1–3A	V.C. Ordinate	0	0	0	0	0	0	0	0	0	0	0	0	0	0	0	0	0	0	0	0
	Tot. Camber	.033	.070	.120	.179	.245	.310	.370	.426	.468	.497	.510	.504	.483	.444	.389	.319	.233	.133	.028	–.063
A1–3B	Struct. Steel	.001	.007	.015	.026	.040	.055	.071	.087	.100	.111	.119	.124	.124	.121	.113	.101	.086	.067	.044	.019
	Other D.L.	~~.034~~	~~.077~~	~~.135~~	~~.205~~	~~.285~~	~~.365~~	~~.441~~	~~.513~~	~~.566~~	~~.608~~	~~.629~~	~~.628~~	~~.607~~	~~.565~~	~~.502~~	~~.420~~	~~.319~~	~~.200~~	~~.072~~	~~.082~~
	Total D.L.	~~.035~~	~~.084~~	~~.150~~	~~.231~~	~~.325~~	~~.420~~	~~.512~~	~~.600~~	~~.668~~	~~.719~~	~~.748~~	~~.752~~	~~.731~~	~~.686~~	~~.615~~	~~.521~~	~~.405~~	~~.267~~	~~.116~~	~~.063~~
P1–3B	V.C. Ordinate	0	0	0	0	0	0	0	0	0	0	0	0	0	0	0	0	0	0	0	0
	Tot. Camber	.035	.084	.150	.231	.325	.420	.512	.600	.668	.719	.748	.752	.731	.686	.615	.521	.405	.267	.116	–.063
A1–4A	Struct. Steel	.008	.017	.028	.041	.056	.071	.085	.097	.107	.113	.116	.115	.110	.101	.088	.072	.053	.030	.006	–.018
	Other D.L.	.022	.047	.082	.123	.169	.216	.259	.297	.328	.348	.358	.355	.340	.313	.275	.225	.164	.095	.020	–.056
	Total D.L.	.030	.064	.110	.164	.225	.287	.344	.394	.435	.461	.474	.470	.450	.414	.363	.297	.217	.125	.026	–.074
P1–4A	V.C. Ordinate	0	0	0	0	0	0	0	0	0	0	0	0	0	0	0	0	0	0	0	0
	Tot. Camber	.030	.064	.110	.164	.225	.287	.344	.394	.435	.461	.474	.470	.450	.414	.363	.297	.217	.125	.026	–.074
A1–4B	Struct. Steel	.001	.006	.014	.024	.037	.051	.066	.080	.093	.103	.111	.115	.116	.112	.105	.094	.080	.062	.041	.018
	Other D.L.	.003	.016	.039	.071	.110	.154	.200	.217	.228	.318	.342	.355	.357	.348	.326	.293	.248	.193	.128	.056
	Total D.L.	.004	.022	.053	.095	.147	.205	.266	.297	.321	.421	.453	.470	.473	.460	.431	.387	.328	.255	.169	.074
P1–4B	V.C. Ordinate	0	0	0	0	0	0	0	0	0	0	0	0	0	0	0	0	0	0	0	0
	Tot. Camber	.004	.022	.053	.095	.147	.205	.266	.297	.321	.421	.453	.470	.473	.460	.431	.387	.328	.255	.169	.074

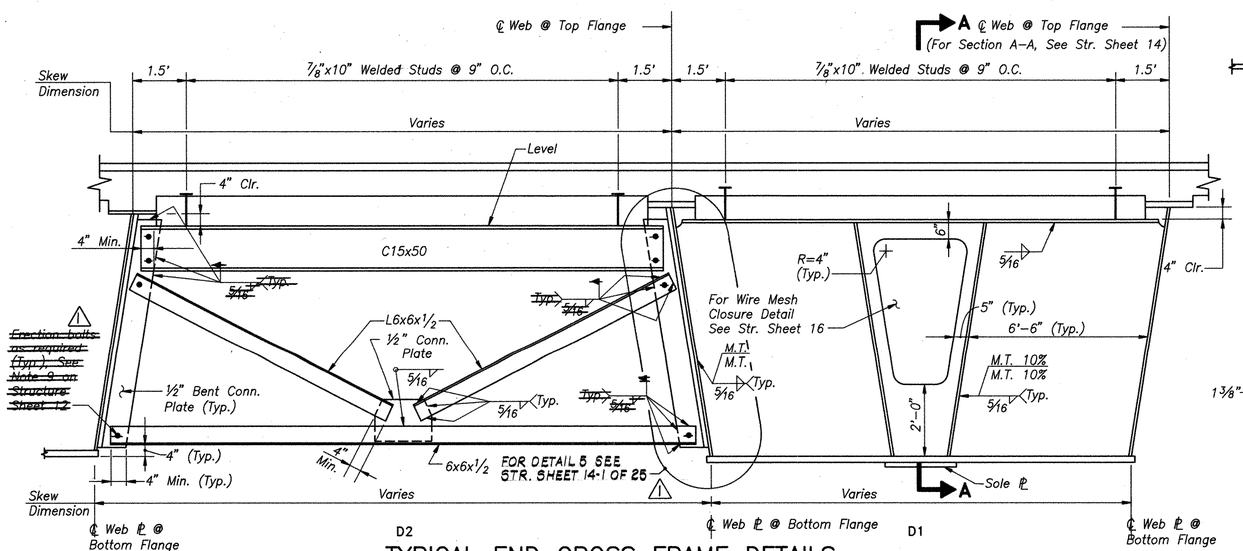

TYPICAL END CROSS FRAME DETAILS

Scale: 1/2" =1'-0"

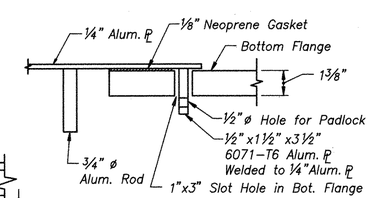

LATCH DETAIL

Scale: None

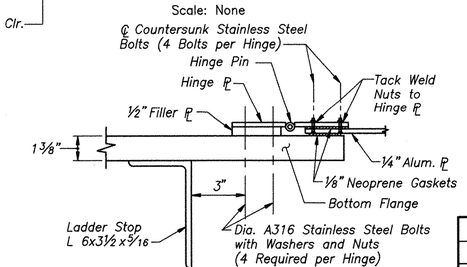

HINGE DETAIL

Scale: None

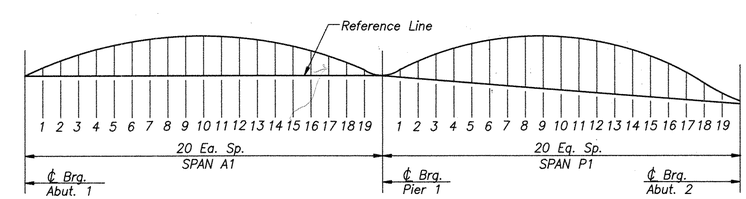

CAMBER DIAGRAM

Not to Scale

THIS SHEET NOT CORRECTED

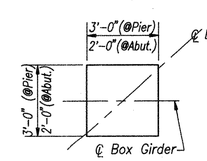

SOLE PLATE SIZE

Scale: None

NO.	DATE	DESCRIPTION
1	3-16-93	REV. CAMBER TABLE
	3-16-93	CHANGE FIELD WELDS TO BOLTS AT CONN. ℄

REVISIONS

CONNECTICUT
DEPARTMENT OF TRANSPORTATION

WETHERSFIELD

ROUTE 3 E.B. ROADWAY OVER INTERSTATE 91

GIRDER CAMBERS

ENGINEER H. W. LOCHNER, INC.
DESIGNER S.R.A. DRAFTER C.S.F. CHECKER L.E.
APPROVED [signature] DATE 4/92
STRUCTURE NO. 159–148–4 BRIDGE LOG NO. STRUCTURE SHEET NO. 15 OF 25

F.H.W.A. REGION NO.	STATE	TOWN	FED. AID PROJ. NO.	PROJ. NO.	YEAR	ROUTE NO.	SHEET NO.	TOTAL SHEETS
1	CONN.	WETHERSFIELD	XAM-1718(2)	159-148	1992	I-91	149	222

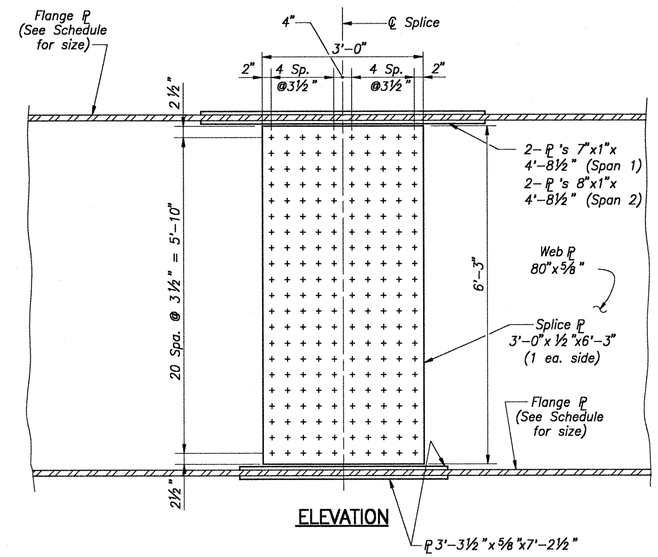

ELEVATION

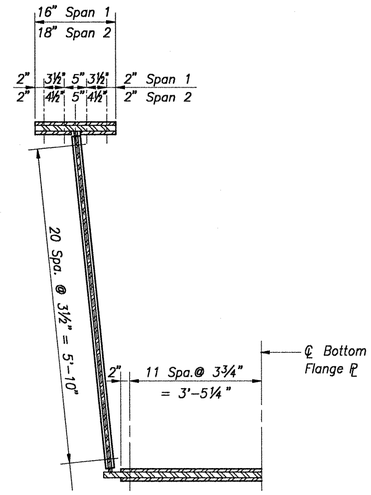

SECTION

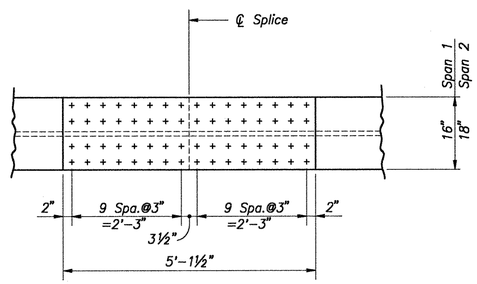

PLAN – TOP FLANGE SPLICE

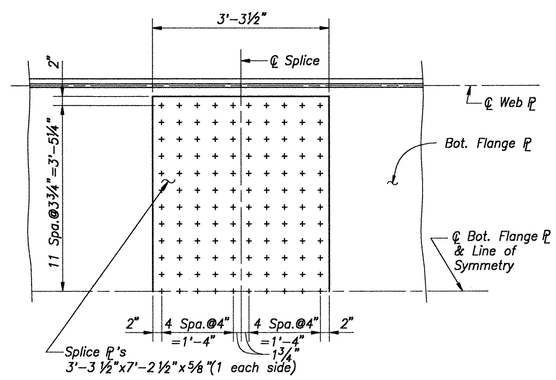

PLAN – BOTTOM FLANGE SPLICE

BOLTED FIELD SPLICE DETAILS – TYPE 1 (POSITIVE MOMENT AREA)

Scale: 3/4"=1'-0"

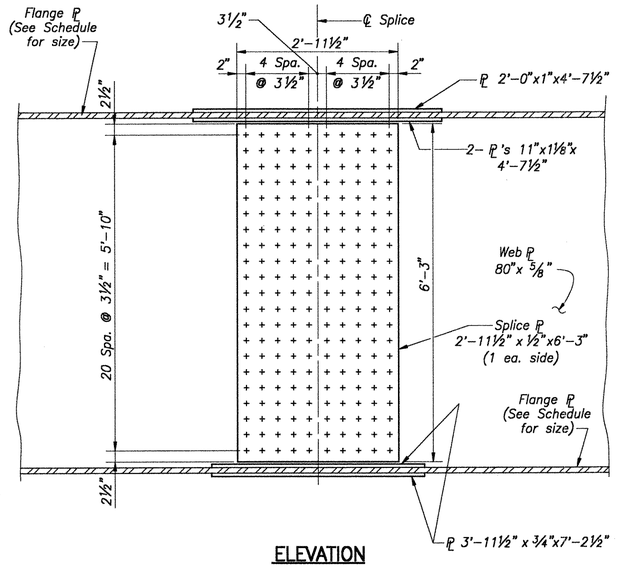

ELEVATION

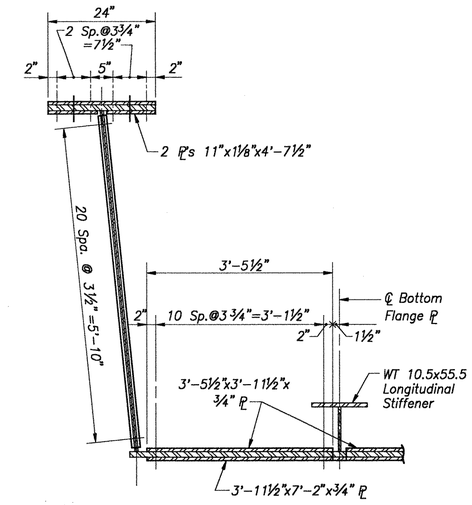

SECTION

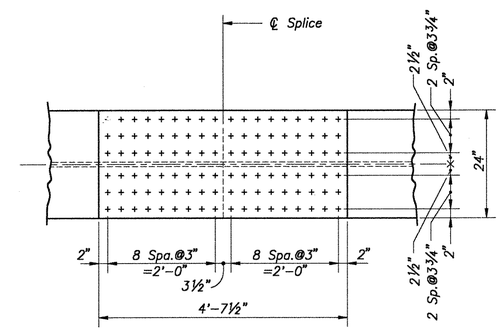

PLAN – TOP FLANGE SPLICE

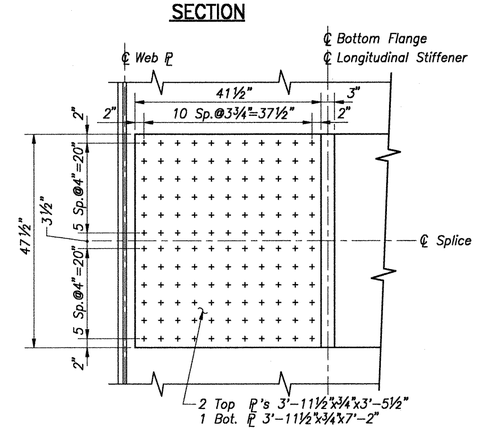

PLAN – BOTTOM FLANGE SPLICE

BOLTED FIELD SPLICE DETAILS – TYPE 2 (NEGATIVE MOMENT AREA)

Scale: 3/4"=1'-0"

THIS SHEET NOT CORRECTED

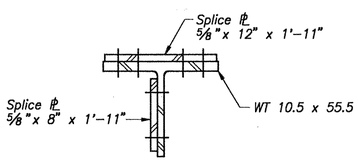

SECTION

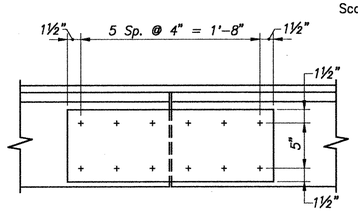

ELEVATION – WEB SPLICE

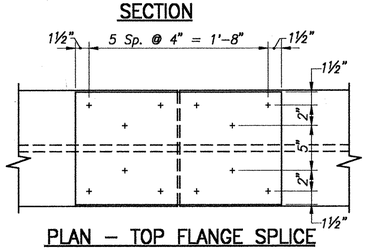

PLAN – TOP FLANGE SPLICE

BOLTED FIELD SPLICE DETAILS – LONGITUDINAL STIFFENER

SCALE: 1½" = 1'-0"

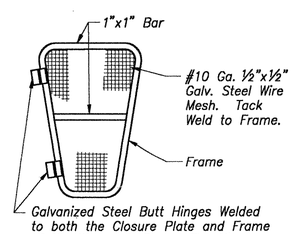

Galvanized Steel Butt Hinges Welded to both the Closure Plate and Frame of the Wiremesh Door. The Hinges shall be spring loaded to keep the Door closed at all times. Door can be opened from either side.

WIRE MESH CLOSURE

Scale: None

BOLTED FIELD SPLICE NOTES:

1. Bolted field splices are friction type design.
2. High strength bolts 7/8"ø shall conform to ASTM A325 standards.
3. AASHTO standard hardened washers shall be placed under all parts turned during assembly.
4. Bolts shall be installed with heads on the outside and nuts on the inside.
5. Bolted field splices will be paid for under the contract unit price for "Splicing Steel Box Girders (159-148-4)".

NO.	DATE	DESCRIPTION

REVISIONS

CONNECTICUT
DEPARTMENT OF TRANSPORTATION

WETHERSFIELD

MODERNIZATION OF THE ROUTES 3 & I-91 INTERCHANGE

ROUTE 3 E.B. ROADWAY OVER INTERSTATE 91

BOLTED FIELD SPLICE DETAILS

ENGINEER H. W. LOCHNER, INC.

DESIGNER S.R.A. | DRAFTER C.S.F. | CHECKER L.E.

APPROVED [signature] DATE 4/92

STRUCTURE NO. 159-148-4 | BRIDGE LOG NO | STRUCTURE SHEET NO. 16 OF 25

F.H.W.A. REGION NO.	STATE	TOWN	FED. AID PROJ. NO.	PROJ. NO.	YEAR	ROUTE NO.	SHEET NO.	TOTAL SHEETS
1	CONN.	WETHERSFIELD	XAM-1718(2)	159-148	1992	I-91	150	222

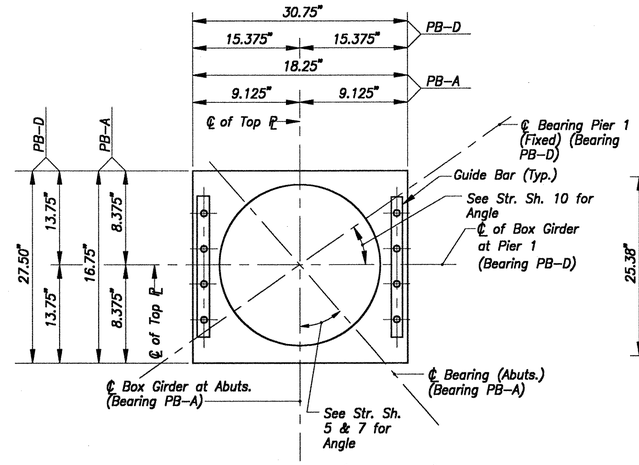

PLAN – TOP PLATE (INVERTED)

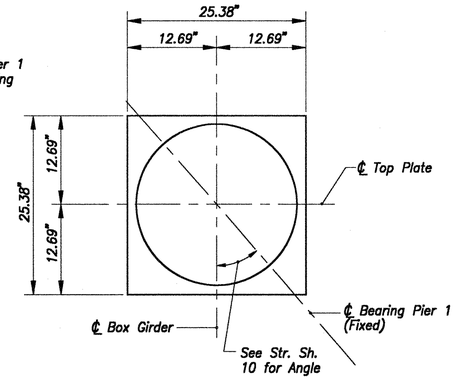

PLAN – TOP PLATE (INVERTED)

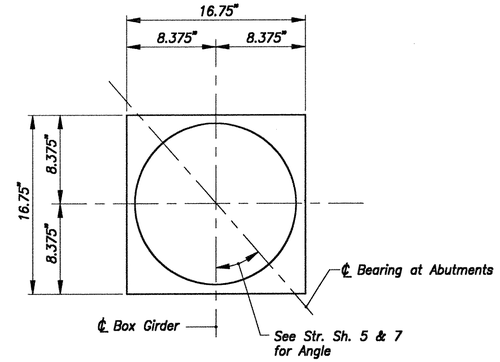

PLAN – TOP PLATE (INVERTED)

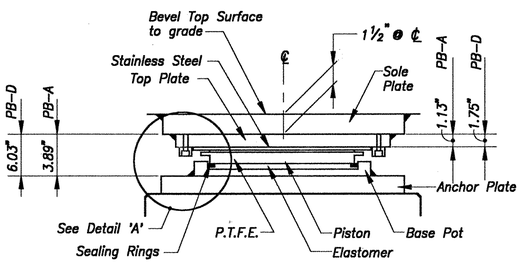

TRANSVERSE SECTION

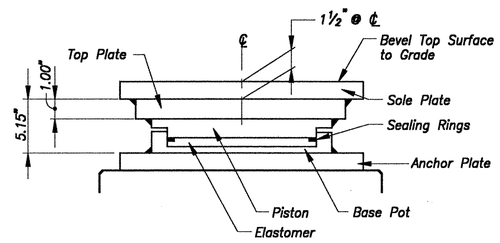

TRANSVERSE SECTION

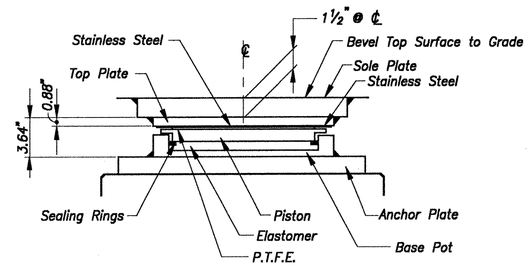

TRANSVERSE SECTION

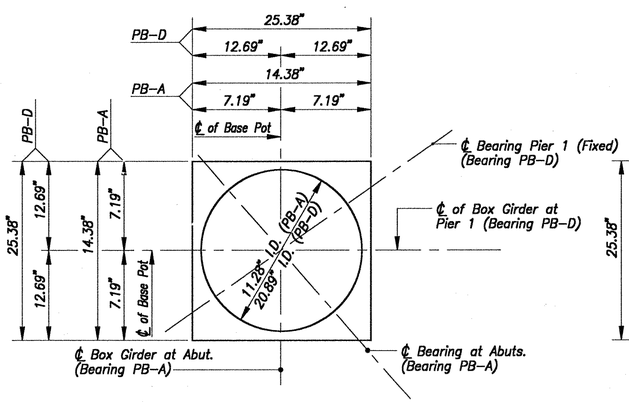

PLAN – BASE POT
BEARING PB-A 450 KIPS
BEARING PB-D 1400 KIPS
GUIDED EXPANSION

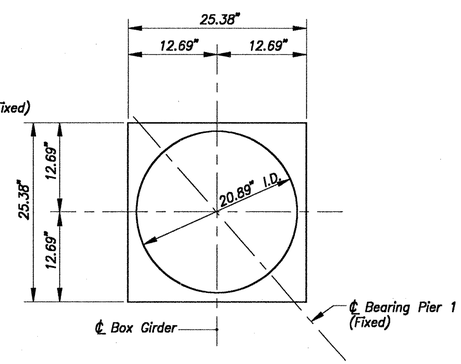

PLAN – BASE POT
BEARING PB-C 1400 KIPS
FIXED BEARINGS

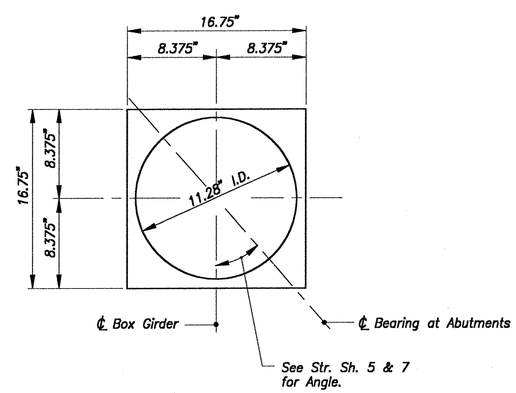

PLAN BASE POT
BEARING PB-B 450 KIPS
NON-GUIDED EXPANSION

POT BEARING DETAILS

Not to Scale

BEARING DATA

	PB-A*	PB-B*	PB-C*	PB-D*
Vertical Loads (Kips)				
Dead Load	246	279	1025	1041
Live Load + Impact	126	126	293	297
DL + LL + Imp.	372	405	1318	1338
Horizontal Loads (Kips)				
Transverse	81	0	145	145
Longitudinal	43	0	118	118
Allowable Pressure Masonry (psi)	1170	1170	1170	1170
Maximum Longitudinal Movement	1.32"	1.32"	0	0
Maximum Transverse Movement	0	.3"	0	.3"

* All Bearings to have Minimum Rotational Capacity of 1°.

NOTES

1. Steel for Bearings shall be ASTM A709 Grade 50W except where shown otherwise. For location of Bearings, see Structure Sheets 5, 7 and 10.
2. The color of the final field coat of paint on the Steel shall match the Department's Standard Bridge Color No. 606 (Blue).
3. The cost of painting shall be included in the contract items for "Pot or Spherical Bearings (450 Kips)" or "Pot or Spherical Bearings (1400 Kips)".
4. Base pot shall not be welded to anchor plate until structural steel has been erected, field splices completed and final bearing adjustments have been made.
5. Bearings shall be set so that the ℄ sole plate shall be coincident with the ℄ Base Pot @ 50° F.

P.T.F.E. = Polytetrafluoroethylene.

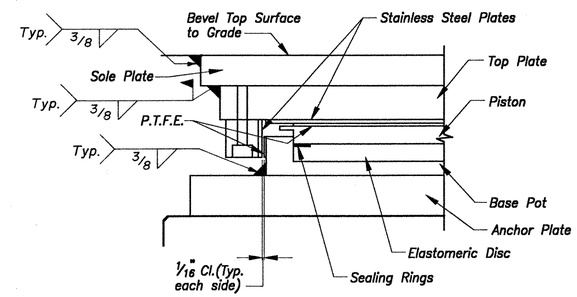

DETAIL 'A'

Not to Scale

LONGITUDINAL MOVEMENT AT BEARINGS DUE TO TEMPERATURE CHANGE FROM 50°F.					
BEARING	LOCATION	TEMPERATURE CHANGE			
		±20°F	±40°F	±60°F	±80°F
PB-A	Abut. No.1	±0.31"	±0.62"	±0.93"	±1.24"
	Abut. No.2	±0.33"	±0.66"	±0.99"	±1.32"
PB-B	Abut. No.1	±0.31"	±0.62"	±0.93"	±1.24"
	Abut. No.2	±0.33"	±0.66"	±0.99"	±1.32"
PB-C PB-D	Pier No.1	0.00"	0.00"	0.00"	0.00"

THIS SHEET NOT CORRECTED

CONNECTICUT
DEPARTMENT OF TRANSPORTATION

WETHERSFIELD

MODERNIZATION OF THE ROUTES 3 & I-91 INTERCHANGE

ROUTE 3 E.B. ROADWAY
OVER
INTERSTATE 91

BEARING DETAILS

NO.	DATE	DESCRIPTION

REVISIONS

ENGINEER H. W. LOCHNER, INC.
DESIGNER S.R.A. DRAFTER R.J.F. CHECKER L.E.
APPROVED DATE 4/92
STRUCTURE NO. 159-148-4 BRIDGE LOG NO STRUCTURE SHEET NO. 17 OF 25

F.H.W.A. REGION NO.	STATE	TOWN	FED. AID PROJ. NO.	PROJ. NO.	YEAR	ROUTE NO.	SHEET NO.	TOTAL SHEETS
1	CONN.	WETHERSFIELD	XAM-1718(2)	159-148	1992	I-91	151	222

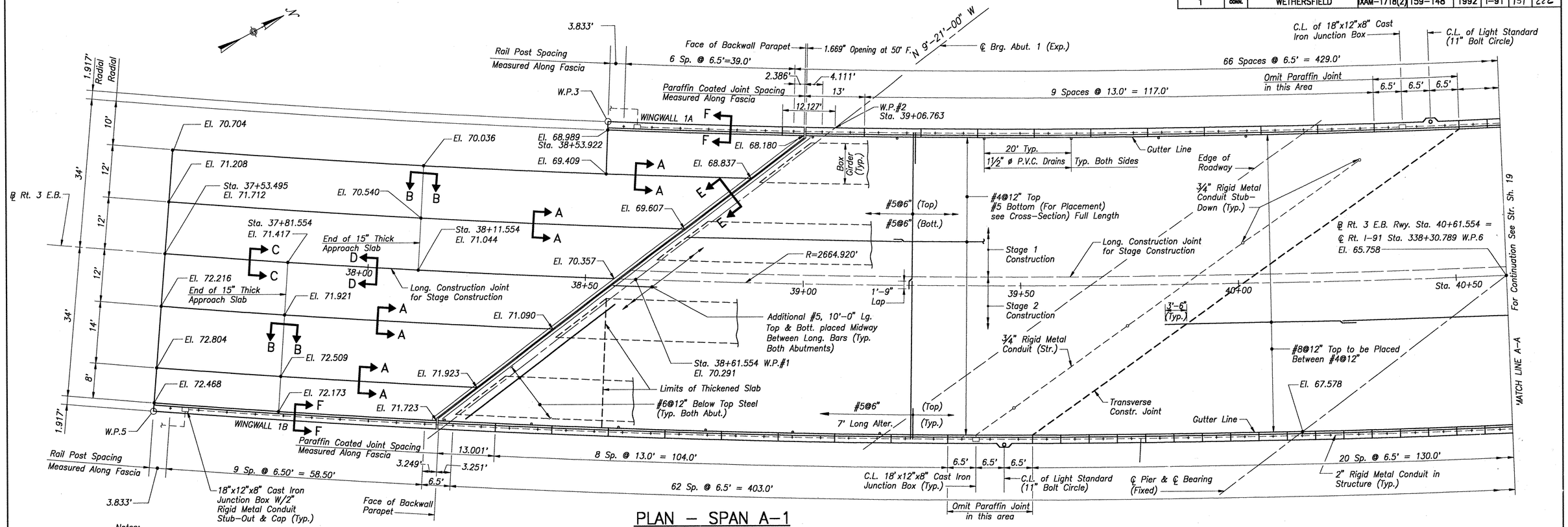

Notes:
1. For Notes, see Structure Sheet 19.

PLAN – SPAN A-1

Scale: 3/32"=1'-0"

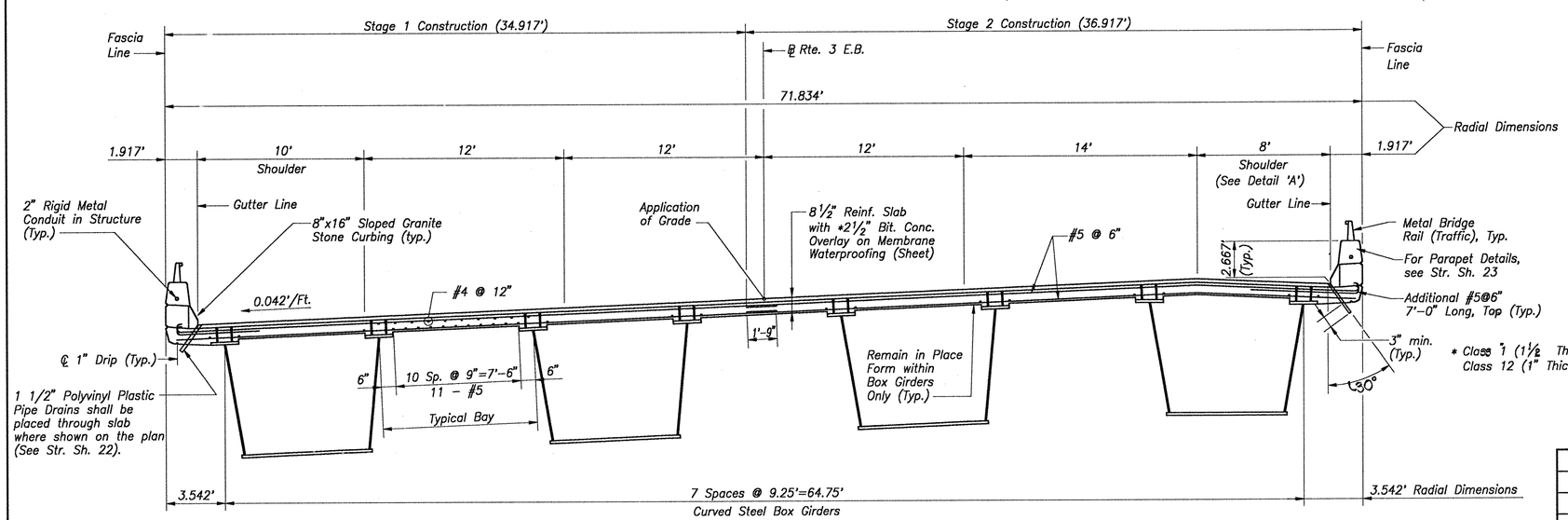

TYPICAL BRIDGE CROSS SECTION

Scale: 1/4"=1'-0"

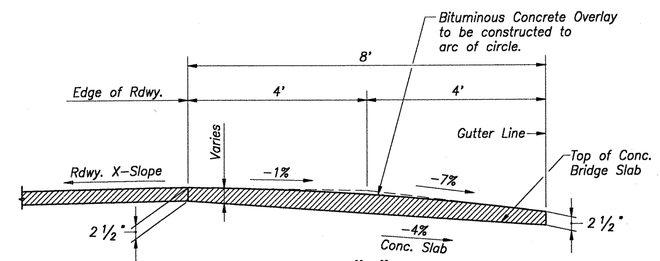

DETAIL "A"

Not to Scale

THIS SHEET NOT CORRECTED

NO.	DATE	DESCRIPTION

REVISIONS

CONNECTICUT
DEPARTMENT OF TRANSPORTATION

WETHERSFIELD

MODERNIZATION OF THE ROUTES 3 & I-91 INTERCHANGE

ROUTE 3 E.B. ROADWAY OVER INTERSTATE 91

SLAB PLAN SPAN A-1 & DECK SECTION

ENGINEER H. W. LOCHNER, INC.
DESIGNER S.R.A | DRAFTER C.S.F. | CHECKER L.E.
APPROVED | DATE 4/92
STRUCTURE NO. 159-14R-4 | BRIDGE LOG NO | STRUCTURE SHEET NO. 18 OF 25

159-148 443-01 151

F.H.W.A. REGION NO.	STATE	TOWN	FED. AID PROJ. NO.	PROJ. NO.	YEAR	ROUTE NO.	SHEET NO.	TOTAL SHEETS
1	CONN.	WETHERSFIELD	XAM-1718(2)	159-148	1992	I-91	152	222

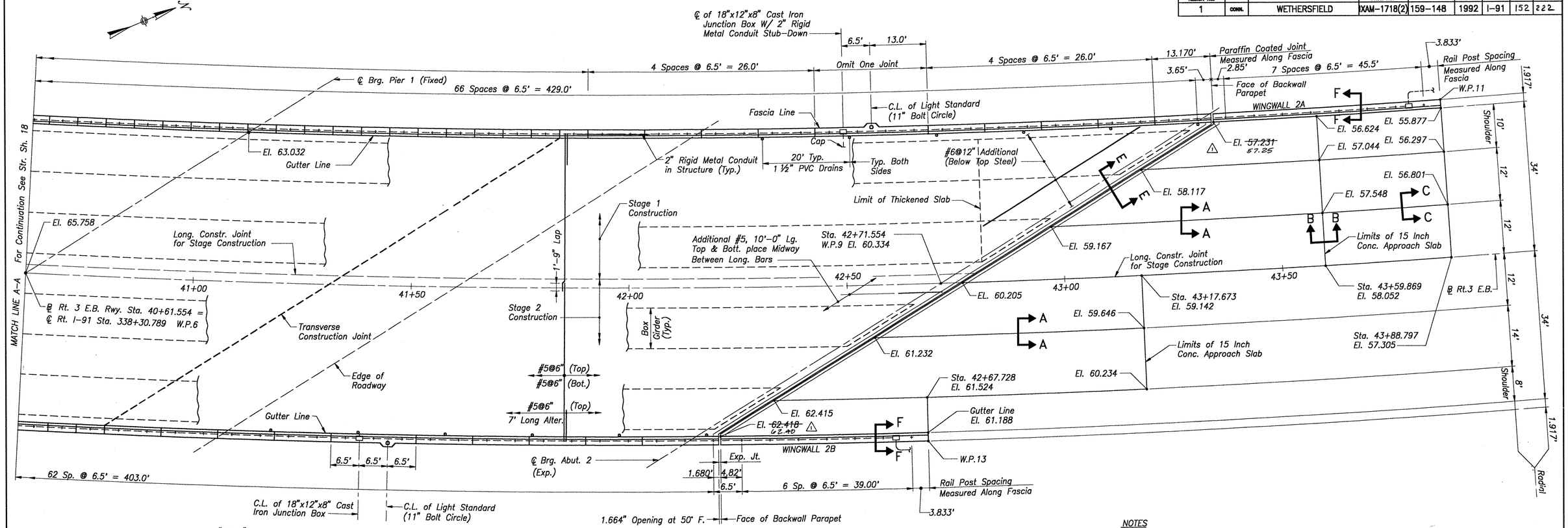

PLAN – SPAN P-1

Scale: 3/32"=1'-0"

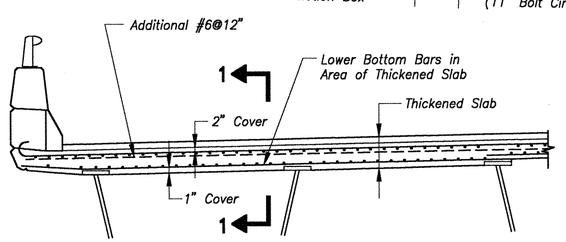

SECTION THRU THICKENED SLAB (LOOKING AT ABUTMENTS)

Scale: 3/8"=1'-0"

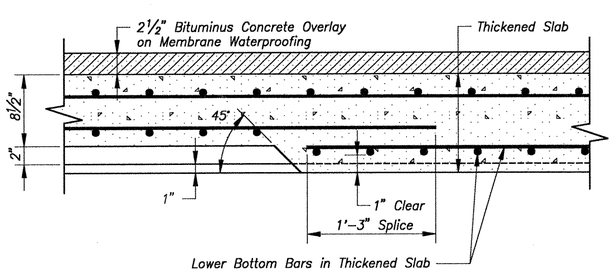

SECTION 1-1

Scale: 1-1/2"=1'-0"

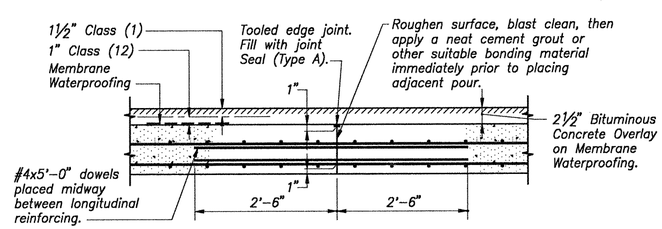

TYPICAL SECTION OF TRANSVERSE CONSTRUCTION JOINT

Not to Scale

NOTES

1. For Typical Cross Section, see Str. Sheet 18.
2. For Parapet Reinforcing at Light Standards and Junction Box, see Str. Sheet 21.
3. For Section A-A, B-B, C-C, D-D, E-E and F-F, see Str. Sheet 23.
4. All elevations apply at Top of Wearing Surface.
5. For Expansion Joint Detail, see Str. Sheet 20.
6. For Electrical Details, see Str. Sheet 25.
7. For Deck Detail at Sign Support, see Str. Sheet 21.

△1 - As Built Information - July 1995

NO.	DATE	DESCRIPTION

REVISIONS

CONNECTICUT
DEPARTMENT OF TRANSPORTATION

WETHERSFIELD

MODERNIZATION OF THE ROUTES 3 & I-91 INTERCHANGE

ROUTE 3 E.B. ROADWAY OVER INTERSTATE 91

SLAB PLAN SPAN P-1 AND DETAILS

ENGINEER H. W. LOCHNER, INC.
DESIGNER S.R.A. | DRAFTER C.S.F. | CHECKER L.E.
APPROVED | DATE 4/92
STRUCTURE NO. 159-148-4 | BRIDGE LOG NO | STRUCTURE SHEET NO. 19 OF 25

F.H.W.A. REGION NO.	STATE	TOWN	FED. AID PROJ. NO.	PROJ. NO.	YEAR	ROUTE NO.	SHEET NO.	TOTAL SHEETS
1	CONN.	WETHERSFIELD	XAM-1718(2)	159-148	1992	I-91	153	222

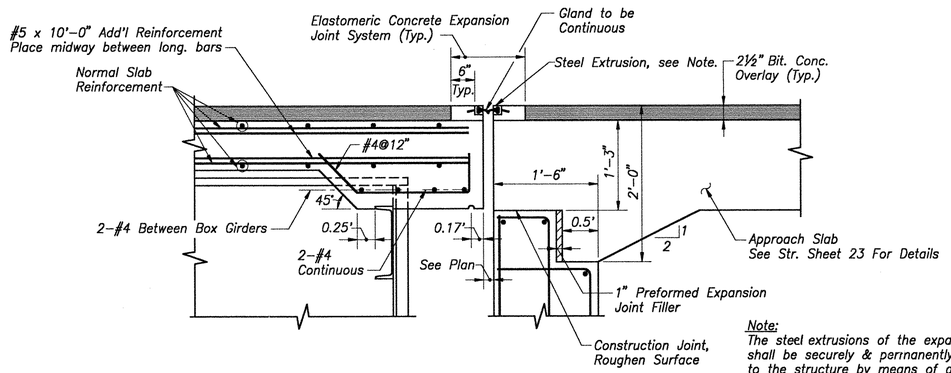

SECTION 1-1

Scale: 1"=1'-0"

Note:
The steel extrusions of the expansion joint shall be securely & permanently anchored to the structure by means of anchorage devices designed by the Joint Manufacturer. Details of the anchorage devices shall be shown on the Shop Drawings & shall be submitted to the Engineers for approval.

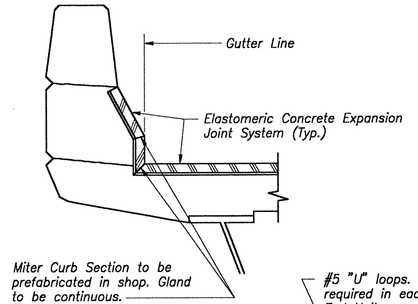

SECTION A-A

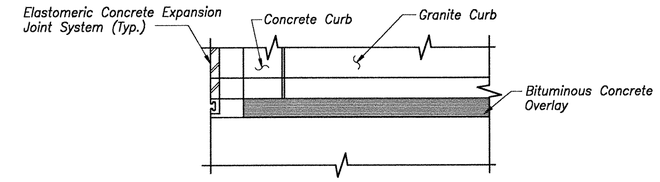

SECTION C-C

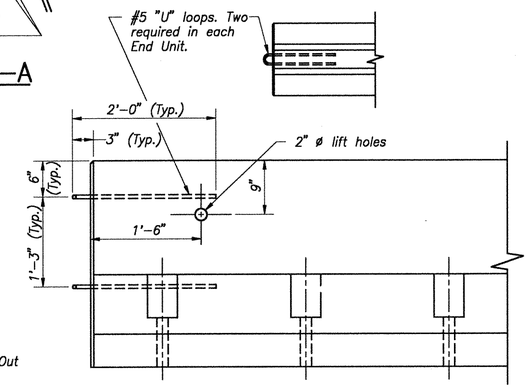

FACE SIDE ELEVATION

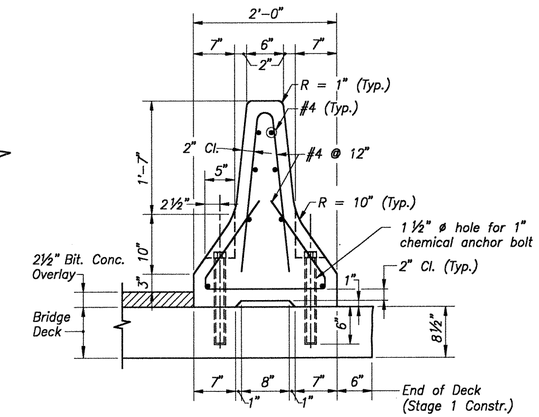

ATTACHMENT OF BARRIER TO DECK

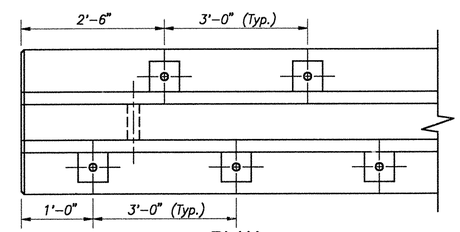

PLAN

STAGE CONSTRUCTION DETAIL

Scale: 1"=1'-0"

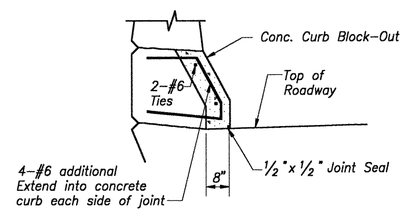

SECTION B-B

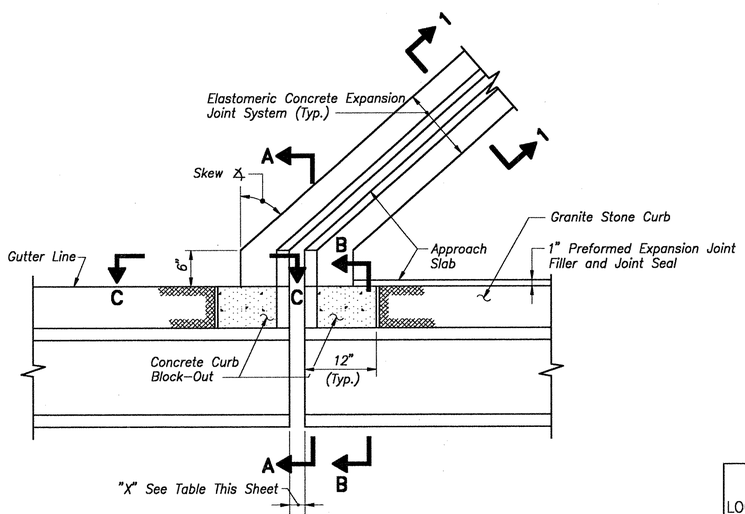

PLAN OF EXPANSION JOINT

Scale: 1"=1'-0"

LOCATION	DIMENSION "X" FOR VARIOUS INSTALLING TEMPERATURES							
	20° F.	30° F.	40° F.	50° F.	60° F.	70° F.	80° F.	90° F.
Abut. 1	2.155	1.993	1.831	1.669	1.507	1.345	1.183	1.021
Abut. 2	2.179	2.007	1.835	1.664	1.492	1.321	1.149	0.977

THIS SHEET NOT CORRECTED

CONNECTICUT
DEPARTMENT OF TRANSPORTATION

WETHERSFIELD

MODERNIZATION OF THE ROUTES 3 & I-91 INTERCHANGE

ROUTE 3 E.B. ROADWAY OVER INTERSTATE 91

EXPANSION JOINT DETAILS

NO	DATE	DESCRIPTION

F.H.W.A. REGION NO.	STATE	TOWN	FED. AID PROJ. NO.	PROJ. NO.	YEAR	ROUTE NO.	SHEET NO.	TOTAL SHEETS
1	CONN.	WETHERSFIELD	XAM-1718(2)	159-148	1992	I-91	154	222

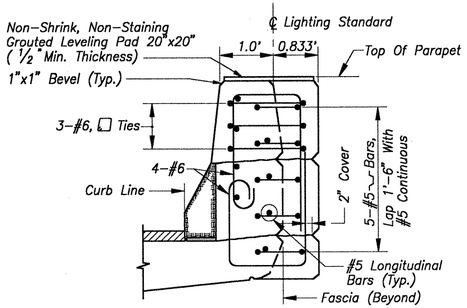

SECTION AT LIGHTING STANDARD

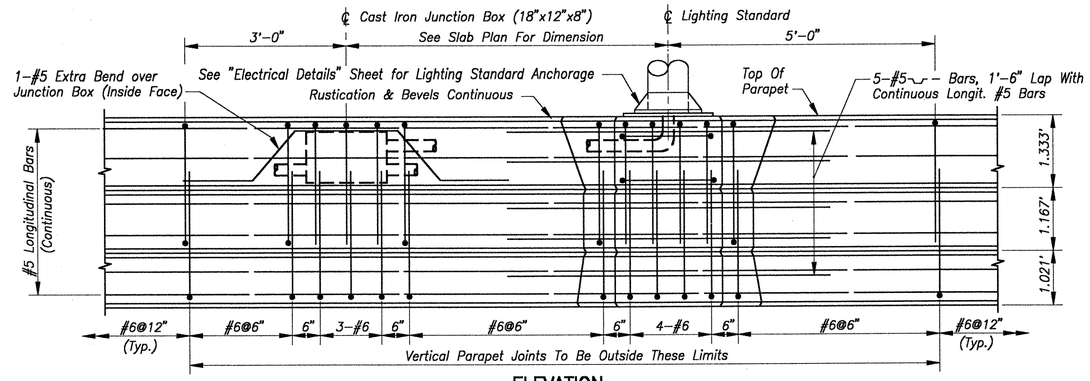

ELEVATION

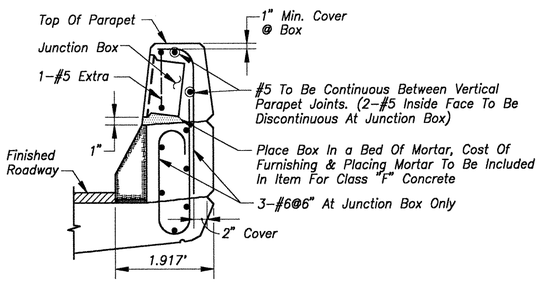

SECTION AT JUNCTION BOX

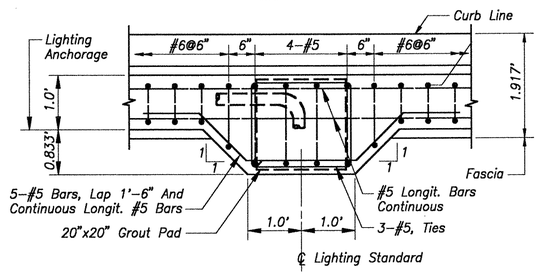

PLAN AT LIGHTING STANDARD

JUNCTION BOX AND LIGHTING STANDARD REINFORCEMENT DETAILS IN DECK PARAPET

Scale: 3/4"=1'-0"

THIS SHEET NOT CORRECTED

THE INFORMATION, INCLUDING ESTIMATED QUANTITIES OF WORK SHOWN ON THESE SHEETS IS BASED ON LIMITED INVESTIGATIONS BY THE STATE AND IS IN NO WAY WARRANTED TO INDICATE THE TRUE CONDITIONS OR ACTUAL QUANTITIES OR DISTRIBUTION OF QUANTITIES OF WORK WHICH WILL BE REQUIRED.

NO.	DATE	DESCRIPTION

REVISIONS

CONNECTICUT
DEPARTMENT OF TRANSPORTATION

WETHERSFIELD

MODERNIZATION OF THE ROUTES 3 & I-91 INTERCHANGE

ROUTE 3 E.B. ROADWAY OVER INTERSTATE 91

SLAB DETAILS – SHEET 1

ENGINEER H. W. LOCHNER, INC.

DESIGNER S.R.A. | DRAFTER C.S.F. | CHECKER L.E.

APPROVED | DATE 4/92

STRUCTURE NO. 159-148-4 | BRIDGE LOG NO | STRUCTURE SHEET NO. 21 OF 25

F.H.W.A. REGION NO.	STATE	TOWN	FED. AID PROJ. NO.	PROJ. NO.	YEAR	ROUTE NO.	SHEET NO.	TOTAL SHEETS
1	CONN.	WETHERSFIELD	XAM-1718(2)	159-148	1992	I-91	155	222

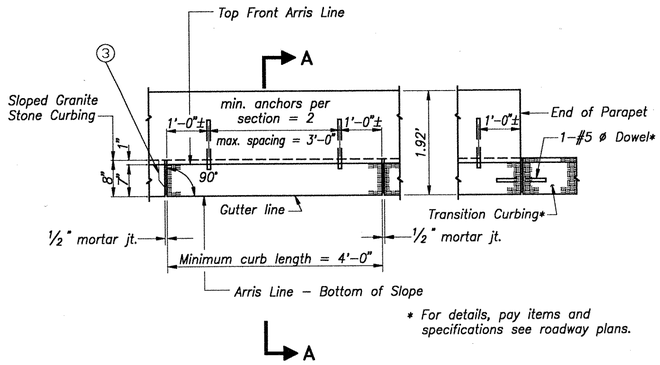

* For details, pay items and specifications see roadway plans.

PLAN

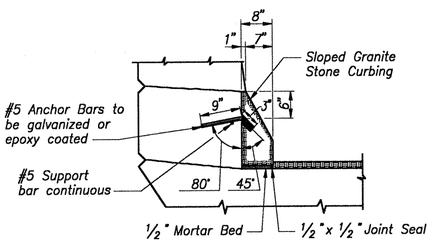

SECTION A-A

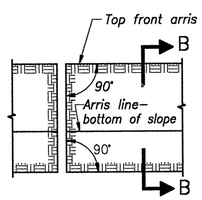

ELEVATION

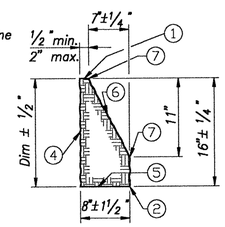

SECTION B-B

SLOPED GRANITE STONE CURBING DETAILS

Not to Scale

TOLERANCE NOTES FOR STONE CURBING:

1. Sawed surface approximating a true plane with no projections or depressions greater than 1/4".
2. Smooth, quarry split surface, free of drill holes, with proj. or depr. not over 1/2".
3. Ends of stones at intermediate joints shall be held full for 2" from all exposed surfaces with a permitted variation of 1/4". Beyond this area the joint may fall away a max. of 3".
4. Split surface shall be free of any projections over 1".
5. Sawed or split surface approximating a true plane to the specified dimensions with projection no greater than 1/4".
6. Sawed surface free of all quarry sawing and cutting marks with allowable depr. or proj. not over 1/4".
7. These arris lines shall be straight and true within a ± tolerance of 1/4".

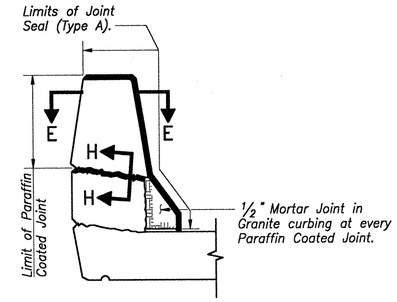

SLOPED CURVE

NEGATIVE MOMENT AREAS

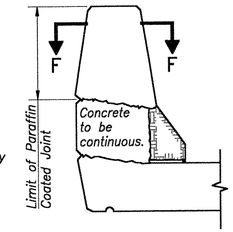

SLOPED CURVE

POSITIVE MOMENT AREAS

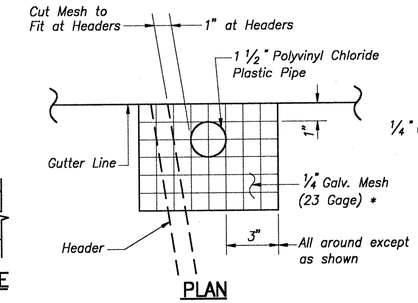

PLAN

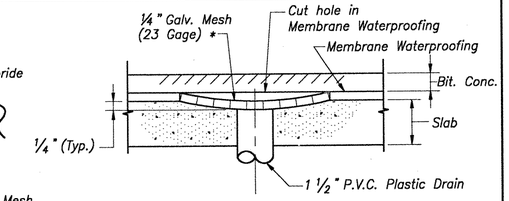

* - The cost of furnishing & installing 1/4" Sq. Galvanized Mesh shall be included in the Contract Bid Price per ton for Bituminous Concrete.

SECTION

CONCRETE HEADER AND WEARING SURFACE INTERFACE DRAINAGE DETAILS

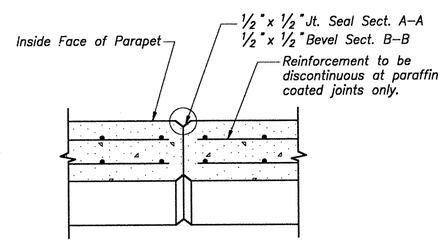

SECTION E-E & F-F

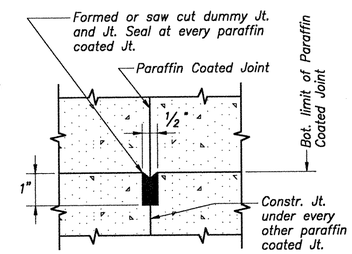

SECTION H-H

JOINTS IN PARAPET AND CURB ON DECK SLAB

Not to Scale

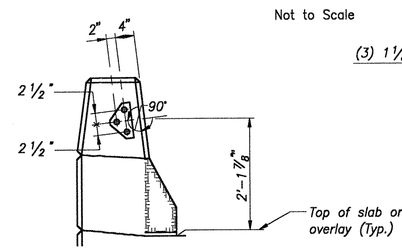

ELEVATION

End of Parapet

Not to Scale

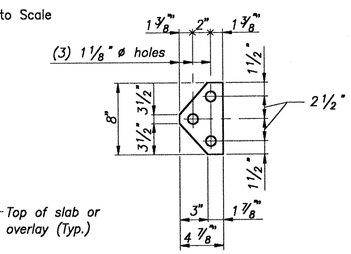

1/4" ANCHORAGE PLATE

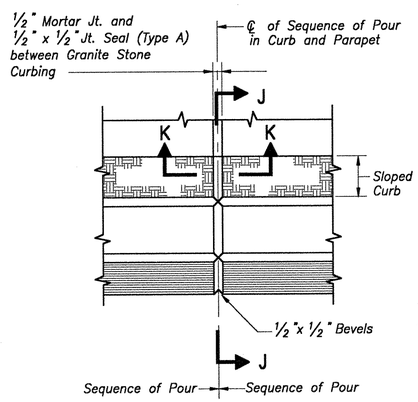

PLAN

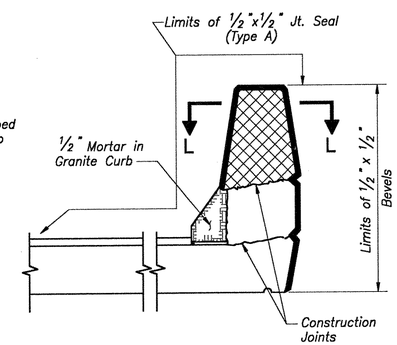

SECTION J-J

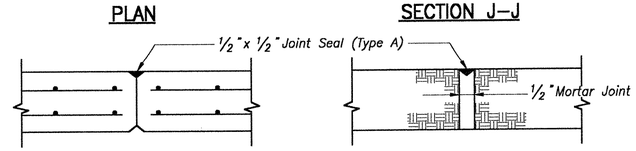

Reinforcement shall be discontinuous at sequence of pour joint in Parapet. (This applies only in the paraffin coated Portion.)

SECTION L-L

SECTION K-K

SEQUENCE OF POUR JOINTS IN SLOPED CURB AND PARAPET

Not to Scale

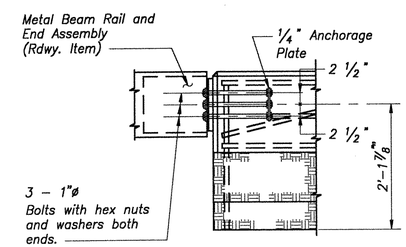

ELEVATION

Vertical End

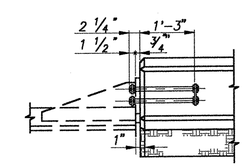

PLAN

PARAPET ANCHORAGE FOR METAL BEAM RAIL (TYPE R-I) ANCHORED TO END OF PARAPET (SLOPED CURB)

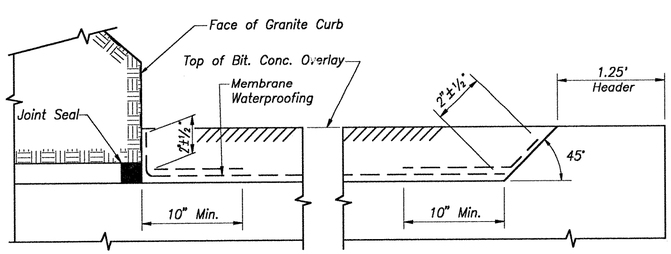

AT GUTTER

AT HEADER

TREATMENT OF MEMBRANE WATERPROOFING

Not to Scale

THIS SHEET NOT CORRECTED

NO.	DATE	DESCRIPTION

REVISIONS

CONNECTICUT
DEPARTMENT OF TRANSPORTATION

WETHERSFIELD

MODERNIZATION OF THE ROUTES 3 & I-91 INTERCHANGE

ROUTE 3 E.B. ROADWAY OVER INTERSTATE 91

SLAB DETAILS - SHEET 2

ENGINEER H. W. LOCHNER, INC.

DESIGNER S.R.A. | DRAFTER C.S.F. | CHECKED L.E.

APPROVED | DATE 4/92

STRUCTURE NO. 159-148-4 | BRIDGE LOG NO | STRUCTURE SHEET NO. 22 OF 25

F.H.W.A. REGION NO.	STATE	TOWN	FED. AID PROJ. NO.	PROJ. NO.	YEAR	ROUTE NO.	SHEET NO.	TOTAL SHEETS
1	CONN.	WETHERSFIELD	XAM-1718(2)	159-148	1992	I-91	156	222

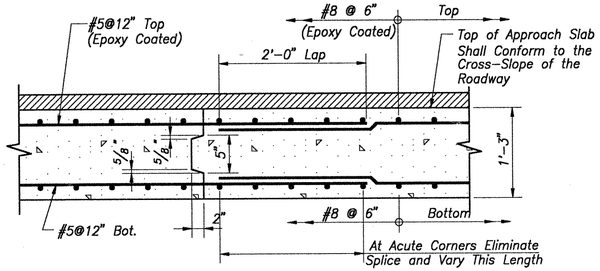

SECTION A-A

Scale: 1"=1'-0"

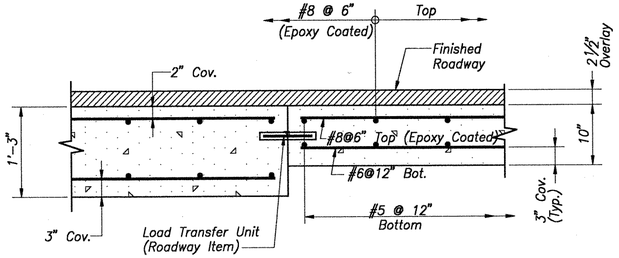

SECTION B-B

Scale: 1"=1'-0"

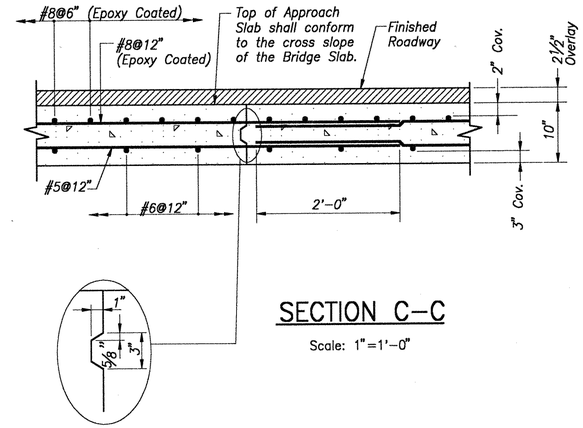

SECTION C-C

Scale: 1"=1'-0"

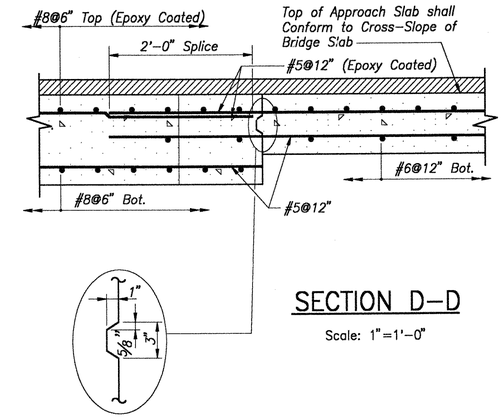

SECTION D-D

Scale: 1"=1'-0"

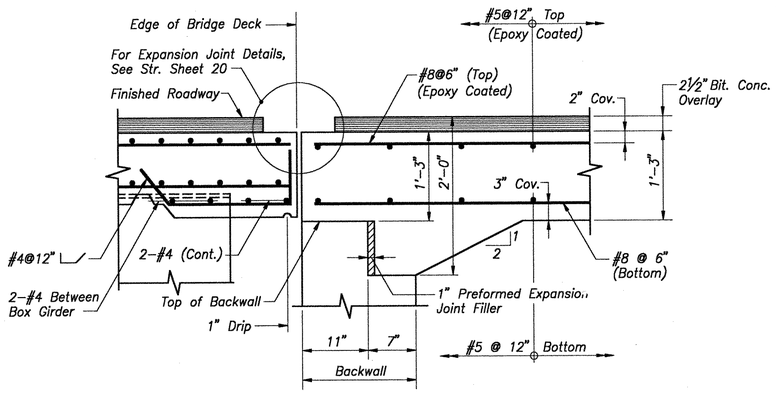

SECTION E-E

Scale: 1"=1'-0"

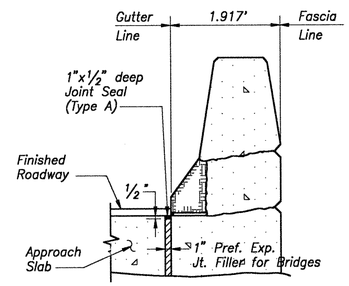

SECTION F-F

Scale: 1"=1'-0"

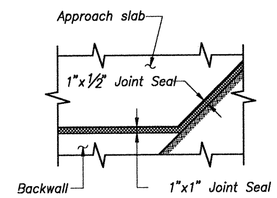

PLAN
LIMITS OF JOINT SEAL AT APPROACH SLAB

Scale: 1"=1'-0"

NOTE
Class "A" Concrete, Deformed Steel Bars and Deformed Steel Bars (Epoxy Coated) in the Approach Slabs are Roadway Items.

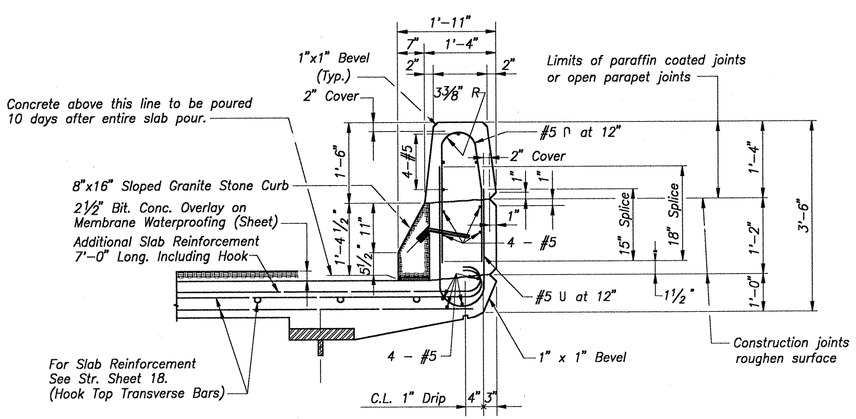

SLOPED CURB AND PARAPET

Not to Scale

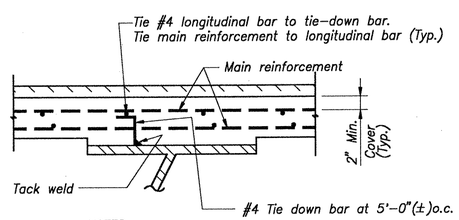

NOTES:
1. Tie-down bars do not exclude the use of chairs for supporting the reinforcement mat.
2. The cost of furnishing and placing tie-down bars to be included in the contract item "Deformed Steel Bars (Epoxy Coated)".
3. Tie-down bars and longitudinal bars to clear shear connectors.

TIE-DOWN DETAIL

Not to Scale

THIS SHEET NOT CORRECTED

NO.	DATE	DESCRIPTION

REVISIONS

CONNECTICUT
DEPARTMENT OF TRANSPORTATION

WETHERSFIELD

MODERNIZATION OF THE ROUTES 3 & I-91 INTERCHANGE

ROUTE 3 E.B. ROADWAY OVER INTERSTATE 91

APPROACH SLAB

ENGINEER H. W. LOCHNER, INC.

DESIGNER S.R.A. | DRAFTER C.S.F. | CHECKER L.E.

APPROVED [signature] DATE 4/92

STRUCTURE NO. 159-148-4 | BRIDGE LOG NO | STRUCTURE SHEET NO. 23 OF 25

159-148

443-01

156

F.H.W.A. REGION	STATE	TOWN	FED. AID PROJ. NO.	PROJ. NO.	YEAR	ROUTE NO.	SHEET NO.	TOTAL SHEETS
1	CONN	WETHERSFIELD	(KAM-17(8))	159-148	1992	I-91	157	222

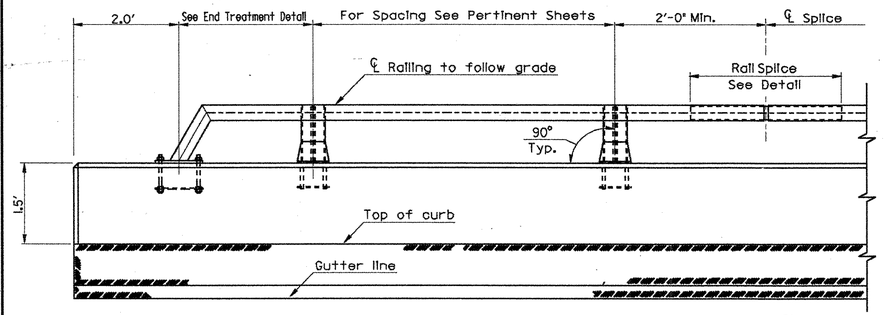

ELEVATION

SCALE : 3/4" = 1'-0"

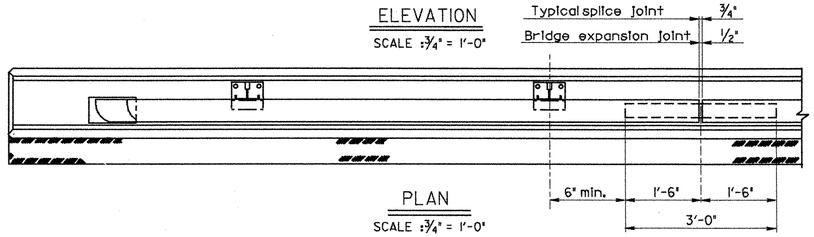

PLAN

SCALE : 3/4" = 1'-0"

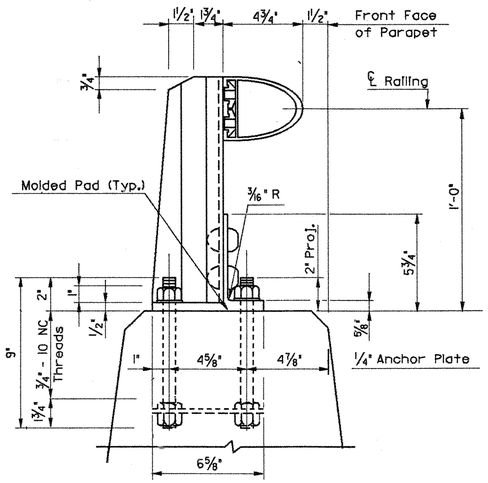

SIDE ELEVATION

SCALE : 3" = 1'-0"

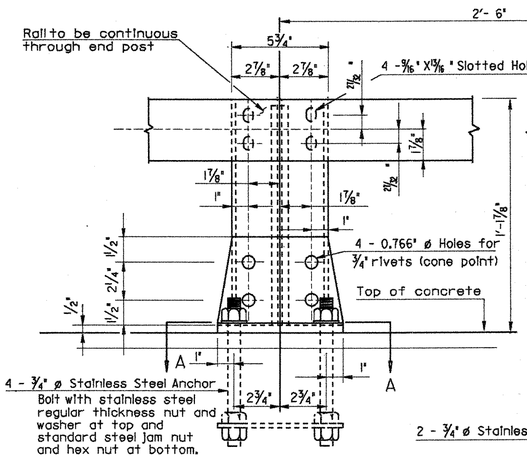

FRONT ELEVATION

SCALE : 3" = 1'-0"

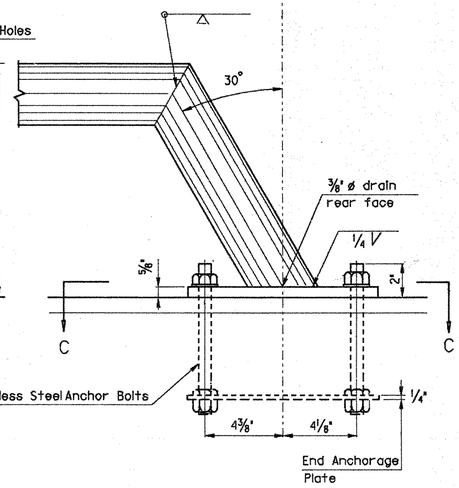

END TREATMENT - ANGULAR

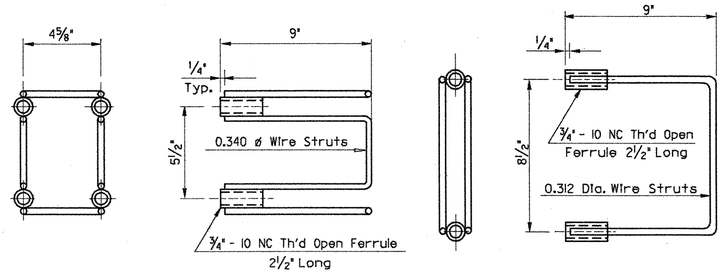

PRESET ANCHORAGE SYSTEM (ALTERNATE)

SCALE : 3" = 1'-0"

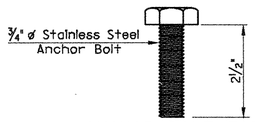

ANCHOR BOLT FOR
PRESET ANCHORAGE SYSTEM

NOT TO SCALE

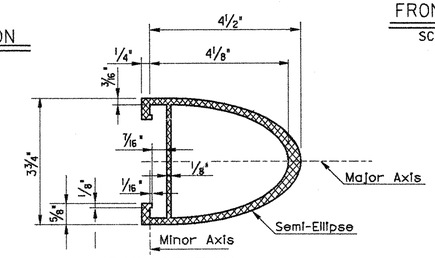

RAIL SECTION

SCALE : 6" = 1'-0"

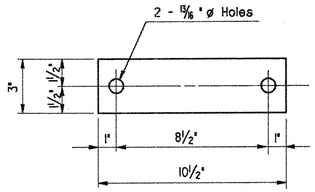

END ANCHORAGE PLATE

SCALE : 3" = 1'-0"

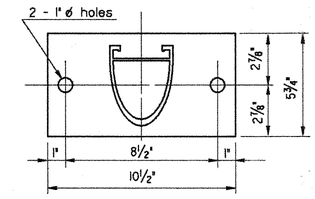

SECTION C-C

SCALE : 3" = 1'-0"

NOTES

Lengths of rail elements shall be continuous over a minimum of four rail posts wherever possible and in no case less than two. Welding of two or more rails to form an element will not be allowed.

For structures having railings with a radius of 400 ft. or more the railing may be sprung into place.

For structures having railings with a radius of less than 400 ft. the railing must be curved.

All railing anchorage systems shall be fabricated and installed perpendicular to the grade.

Splice shall be sliding fit in rail sections.

All extruded rails and posts shall be free of burrs, irregularities and sharp edges.

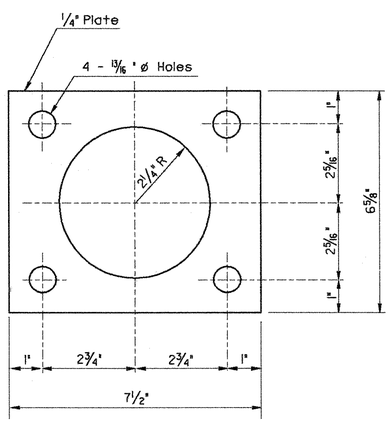

ANCHOR PLATE

SCALE : 6" = 1'-0"

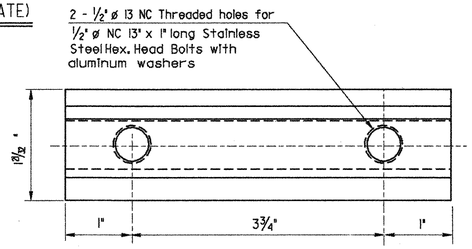

POST CONNECTION

FULL SCALE

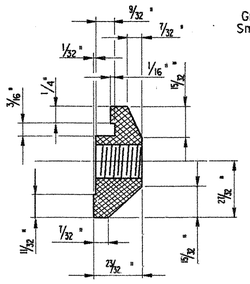

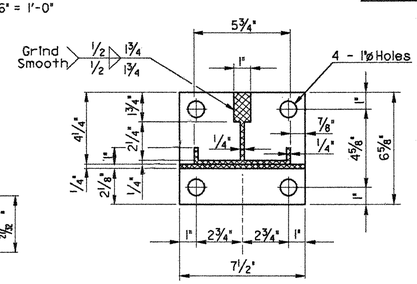

SECTION A-A

SCALE : 3" = 1'-0"

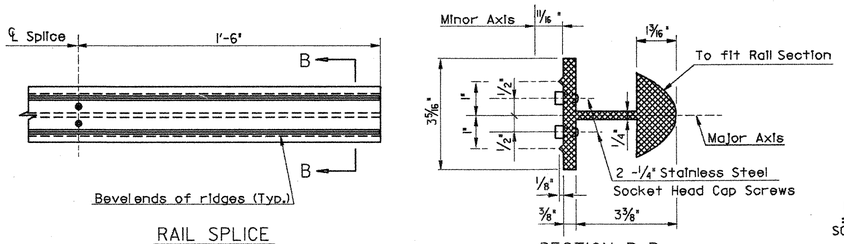

RAIL SPLICE

SCALE : 3" = 1'-0"

SECTION B-B

SCALE : 6" = 1'-0"

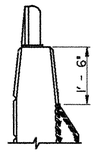

END VIEW

SCALE : 1/2" = 1'-0"

THIS SHEET NOT CORRECTED

NO.	DATE	DESCRIPTION

F.H.W.A. REGION NO.	STATE	TOWN	FED. AID PROJ. NO.	PROJ. NO.	YEAR	ROUTE NO.	SHEET NO.	TOTAL SHEETS
1	CONN.	WETHERSFIELD	IXAM-1718(2)	159-148	1992	I-91/3	158	222

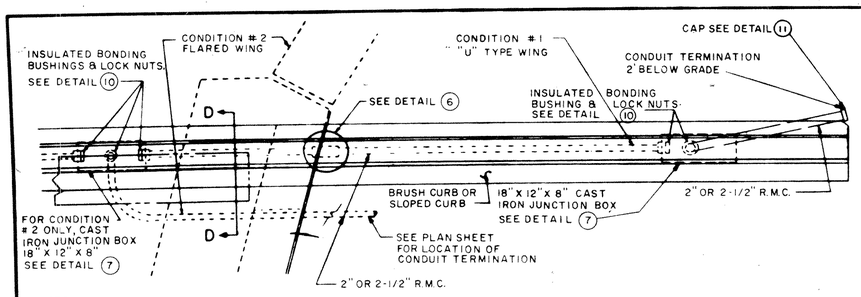

NOTE

1. UTILIZE 30° BENDS TO FACILIATE CONDUIT LEAVING WINGWALL AT 2'-0" BELOW GRADE.
2. CONDUIT BENDS SHALL HAVE A RADIUS OF NOT LESS THAN 6 TIMES THE TRADE SIZE OF CONDUIT

(1) CONDUIT PARAPET TO FILL
PLAN SCALE 1/2" = 1'

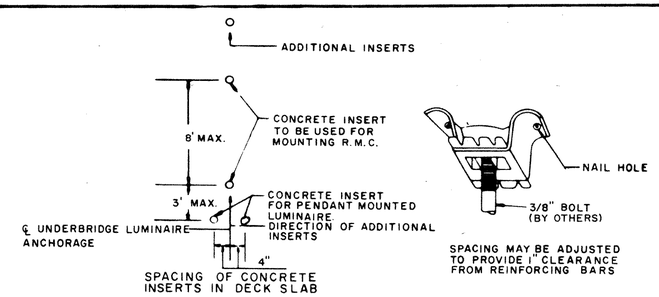

(4) CONCRETE INSERT DETAIL

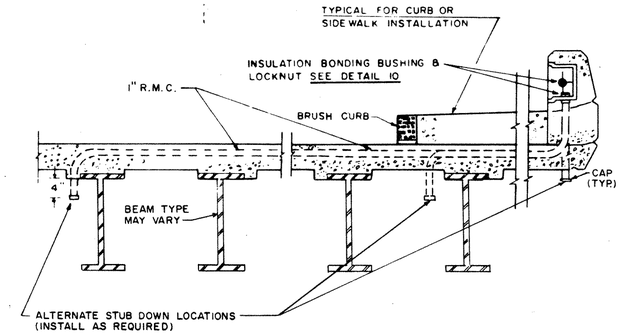

(9) SERVICE TO LUMINAIRE UNDER STRUCTURE

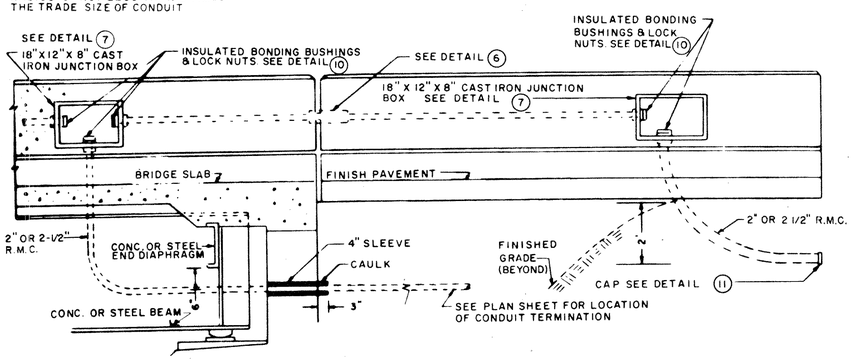

(2) CONDUIT PARAPET TO FILL
ELEVATION SCALE 1/2" = 1'

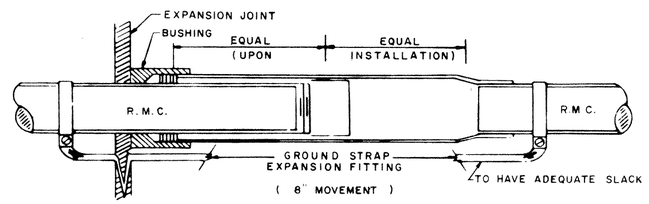

(6) DETAIL OF EXPANSION FITTING
USE AT ALL EXPANSION JOINTS

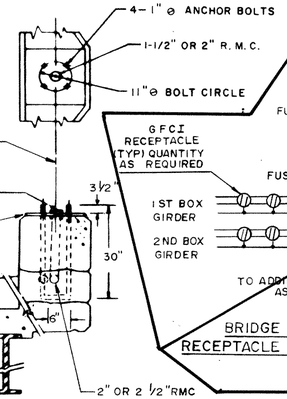

NOTE:
FOR LEVELING PAD DETAILS & PARAPET DETAILS AND REINFORCING AT LIGHT STANDARD - SEE APPROPRIATE STRUCTURE SHEETS

FURNISHING & INSTALLING ANCHOR BOLTS SHALL BE PAID FOR AT THE UNIT PRICE BID FOR DEFORMED STEEL BARS.

(5)

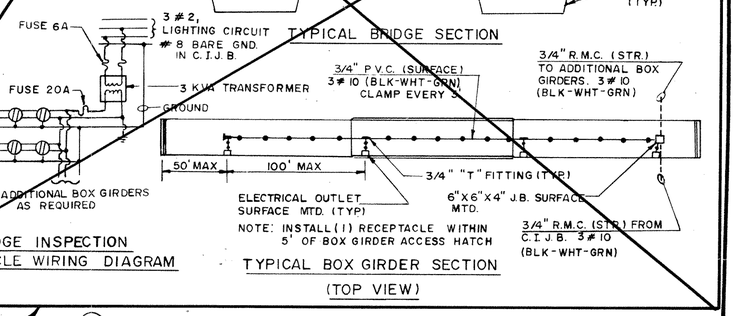

(8) SERVICE TO BRIDGE INSPECTION RECEPTACLES

THIS DETAIL REVISED - SEE SHEET 158-1

(10) CAPPED INSULATED BONDING BUSHING WITH GROUND LUG

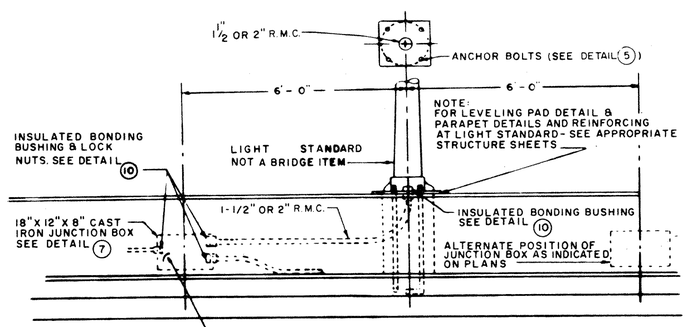

NOTE:
FOR PARAPET AND REINFORCING DETAILS AT JUNCTION BOX, SEE APPROPRIATE STRUCTURE SHEET

(3) LIGHTING STANDARD ON PARAPET WALL

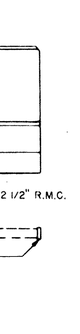

(11) MALLEABLE IRON CAP

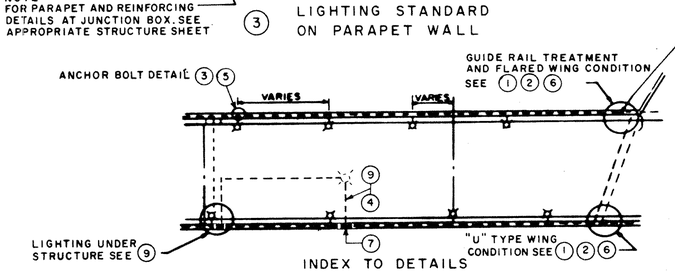

INDEX TO DETAILS

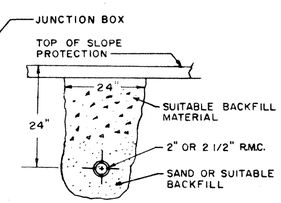

RIGID METAL CONDUIT UNDER SLOPE PROTECTION

(12)

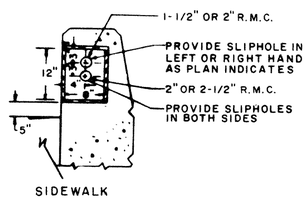

(7) JUNCTION BOX INSTALLATION
(USE APPLICABLE DETAIL)

NOTE:
FOR PARAPET AND REINFORCING DETAILS AT JUNCTION BOX, SEE APPROPRIATE STRUCTURE SHEET.

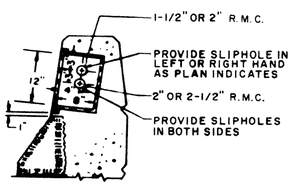

* NOTE: FOR DETAILS THAT APPLY ONLY

	DET. NO.	DESCRIPTION
*	1	CONDUIT PARAPET TO FILL
*	2	CONDUIT PARAPET TO FILL
*	3	LIGHTING STANDARD ON PARAPET WALL
	4	CONCRETE INSERT
*	5	PARAPET TREATMENT AT LIGHT STANDARD
*	6	DETAIL OF EXPANSION FITTING
*	7	JUNCTION BOX INSTALLATION
*	8	SERVICE TO BRIDGE INSPECTION RECEPTACLE
*	9	SERVICE TO LUMINAIRE UNDER STRUCTURE
*	10	CAPPED INSULATED BONDING BUSHING WITH GROUND LUG
*	11	MALLEABLE IRON CAP
	12	RIGID METAL CONDUIT UNDER SLOPE PROTECTION

ABBREVIATIONS & TERMS

℄ L S A	- ℄ LIGHT STANDARD ANCHORAGE
R.M.C. (S.P.)	- RIGID METAL CONDUIT UNDER SLOPE PROTECTION
R.M.C. STR.	- RIGID METAL CONDUIT IN STRUCTURE
C.I.J.B.	- CAST IRON JUNCTION BOX
℄ U L A	- ℄ UNDERBRIDGE LUMINAIRE ANCHORAGE
R.M.C. (SD)	- RIGID METAL CONDUIT STUB DOWN

REVISIONS		
NO.	DATE	DESCRIPTION
1	3-92	REVISED DETAIL (B)

THIS SHEET NOT CORRECTED

CONNECTICUT
DEPARTMENT OF TRANSPORTATION
BUREAU OF HIGHWAYS

WETHERSFIELD

MODERNIZATION OF ROUTES 3 & I-91 INTERCHANGE
RTE. 3 E.B. RDWY.
OVER
INTERSTATE 91

ELECTRICAL DETAILS

SUBMITTED BY [signature] ENG. OF TRAFFIC ELECTRICAL — DATE [illegible]
APPROVED [signature] CHIEF OF TRAFFIC ENGINEERING — DATE 5/21/84

SCALE: NONE

STRUCTURE NO. 159-148-4 (1) STRUCTURE SHEET 25 OF 25