FORM NO. ENG. 25 ED. 11-52

PUB. ROAD DIV. NO.	STATE	TOWN	FED. AID PROJ. NO.	PROJ. NO.	YEAR	ROUTE NO.	SHEET NO.	TOTAL SHEETS
1	CONN.	WETHERSFIELD	I-91-2141134	159-91	1961	I-91	42	174

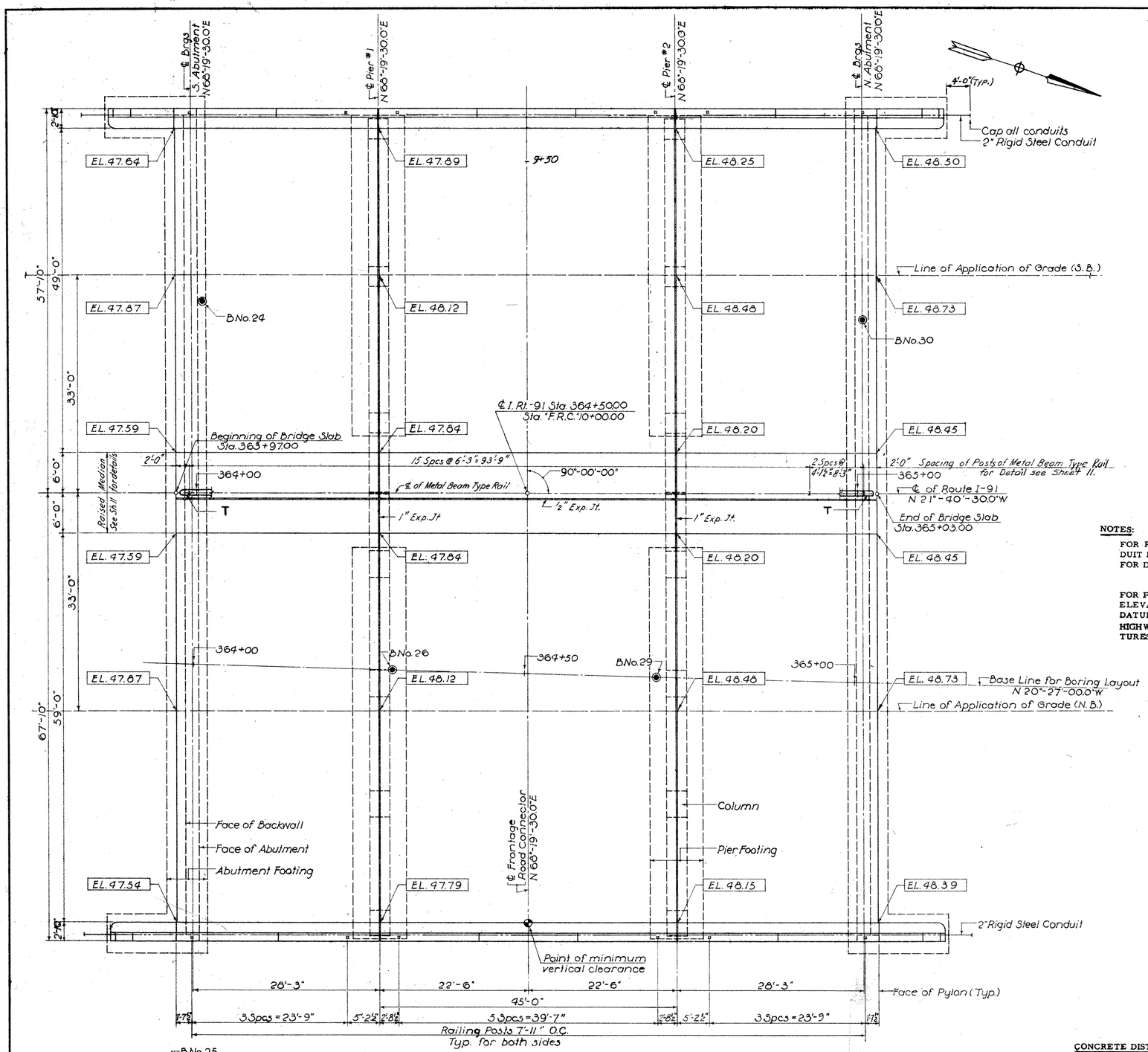

PLAN

Scale: 1/8" = 1'-0"

INDEX OF PLANS

1. GENERAL PLAN
2. BORINGS
3. SECTIONS AND ELEVATIONS
4. ABUTMENTS
5. ABUTMENT DETAILS
6. PIERS
7. PIER DETAILS
8. PARAPET & SLAB DETAILS
9. SUPERSTRUCTURE DETAILS
10. METAL BRIDGE RAIL
11. METAL BEAM TYPE RAIL
12. ELECTRICAL DETAILS

NOTES:

FOR RIGID STEEL CONDUIT DETAILS SEE SH. NO. 12
FOR DETAILS OF BRIDGE RAIL SEE SH. NO. 10

FOR PIER FOOTING DETAILS SEE SH. NO. 7
ELEVATIONS ARE BASED ON U. S. C. & G. S. DATUM.
HIGHWAY DRAINAGE PIPES AND STRUCTURES NOT SHOWN - SEE HIGHWAY PLANS

CONCRETE DISTRIBUTION:

SUPERSTRUCTURE	410	CY
SUBSTRUCTURE	357	CY
FOOTINGS	445	CY
TOTAL	1,212	CY

ESTIMATED QUANTITIES

ITEM	UNIT	QUANTITY
STRUCTURE EXCAVATION (COMPLETE)	C. Y.	2,100
CLASS "A" CONCRETE	C. Y.	1,212
1/4" PREFORMED EXP. JT. FILLER FOR BRIDGES	S. F.	19
1/2" PREFORMED EXP. JT. FILLER FOR BRIDGES	S. F.	207
1" PREFORMED EXP. JT. FILLER FOR BRIDGES	S. F.	27
DEFORMED STEEL BARS	LB.	202,000
STRUCTURAL STEEL	LB.	259,000
ALTERNATE "A": SPIRAL SHEAR CONNECTOR BARS	LB.	7,000
ALTERNATE "B": WELDED STUD SHEAR CONNECTORS (5 INCH)	EA.	4,560
DAMPPROOFING	S. Y.	180
NEOPRENE PLATE FOR BRIDGE EXP. JT.	L. F.	251
METAL BRIDGE RAIL	L. F.	213
GRAVEL FILL	C. Y.	200
PERVIOUS STRUCTURE BACKFILL	C. Y.	318
COMPACTED GRAVEL FILL	C. Y.	4,280
2" RIGID STEEL CONDUIT (BRIDGE)	L. F.	270
CRUSHED STONE FOR SLOPE PROTECTION	TON	334
SOIL LOADING TESTS	EA.	2
METAL BEAM TYPE RAIL (BRIDGE)	L. F.	106

GENERAL NOTES

SPECIFICATIONS: CONN. STATE HIGHWAY DEPARTMENT FORM 808 (JAN. 1955) AND SPECIAL PROVISIONS.

DESIGN SPECIFICATIONS: STD. SPEC. FOR HWY. BRIDGES (AASHO-1957) EXCEPT AS MODIFIED BY THE BUREAU OF PUBLIC ROADS "POLICY ON INTERSTATE SYSTEM PROJECTS" (AUG. 1956) AND AS SUPPLEMENTED BY THE CONN. STATE HWY. DEPT. BRIDGE MANUAL (FEB. 1956)
SLAB DESIGN - TENTATIVE AASHO T. 8 (59)

LIVE LOAD: H20-S16-44. ALT. 24000# DUAL AXLE AT 4'-0" O. C.

FUTURE PAVING ALLOWANCE: 25# P. S. F.

COMPOSITE CONSTRUCTION: NO TEMPORARY INTERMEDIATE SUPPORTS SHALL BE USED DURING CONSTRUCTION. SUPERIMPOSED LOADS SHALL BE PLACED WHEN DIRECTED BY THE ENGINEER, BUT NOT LESS THAN 10 DAYS AFTER THE SLAB HAS BEEN POURED.

CLASS "A" CONCRETE: CLASS "A" CONCRETE SHALL BE USED THROUGHOUT. SEE SPECIAL PROVISIONS.

DEFORMED STEEL BARS: FOR GRADES OF DEFORMED STEEL BARS, SEE SPECIAL PROVISIONS.

EXPOSED EDGES: EXPOSED EDGES SHALL BE BEVELED 1" X 1" UNLESS DIMENSIONED OTHERWISE.

STRUCTURAL STEEL: ALL MATERIAL FOR PLATED ROLLED BEAMS SHALL CONF TO ASTM A-373.

ALL OTHER STEEL SHALL CONFORM TO ASTM A-7 UNLESS NOTED OTHERWISE.

PAINTING: FOR SHOP AND FIELD PAINTING OF STRUCTURAL STEEL AND METAL BRIDGE RAIL, SEE SPECIAL PROVISIONS.

JOINT SEAL: JOINT SEAL SHALL BE INCLUDED IN THE ITEM FOR CLASS "A" CONCRETE. SEE SPECIAL PROVISIONS.

FELT: THE COST OF FURNISHING AND PLACING 2 LAYERS OF 15# ROOFING FELT ON TOP OF BACKWALLS SHALL BE INCLUDED IN THE ITEM FOR CLASS "A" CONCRETE.

SHEET NUMBERS: WHEREVER REFERENCE IS MADE TO A SHEET NUMBER PERTAINING TO THE STRUCTURE, IT WILL REFER TO THE BRIDGE SHEET NUMBER SHOWN IN THE BOTTOM TITLE BOX.

THE INFORMATION, INCLUDING ESTIMATED QUANTITIES OF WORK, SHOWN ON THESE SHEETS IS BASED ON LIMITED INVESTIGATIONS BY THE STATE AND IS IN NO WAY WARRANTED TO INDICATE THE TRUE CONDITIONS OR ACTUAL QUANTITIES OR DISTRIBUTION OF QUANTITIES OF WORK WHICH WILL BE REQUIRED.

REVISIONS		
NO.	DATE	DESCRIPTION

CONNECTICUT
STATE HIGHWAY DEPARTMENT

TOWN OF WETHERSFIELD
INTERSTATE ROUTE 91
OVER
FRONTAGE ROAD CONNECTOR
GENERAL PLAN

DESIGNED BY LEONARD S. WEGMAN CO., CONTRACTING ENGINEER
SCALES AS SHOWN
MADE BY LEK DATE 1-16-61
CHECKED BY LK DATE 1-16-61
APPROVED [signature] DATE 1-16-61
PROJECT NO. 159-91
BRIDGE SHEET NO. 1 OF 12

TRIANGLE LITHO PRINT CO., INC.

159-91

M 261 01

FORM NO. ENG. 15 ED. 11-58

PUB. ROAD DIV. NO.	STATE	TOWN	FED. AID PROJ. NO.	PROJ. NO.	YEAR	ROUTE NO.	SHEET NO.	TOTAL SHEETS
1	CONN.	WETHERSFIELD	I-84-2(413)4	159-91	1961	I-91	43	174

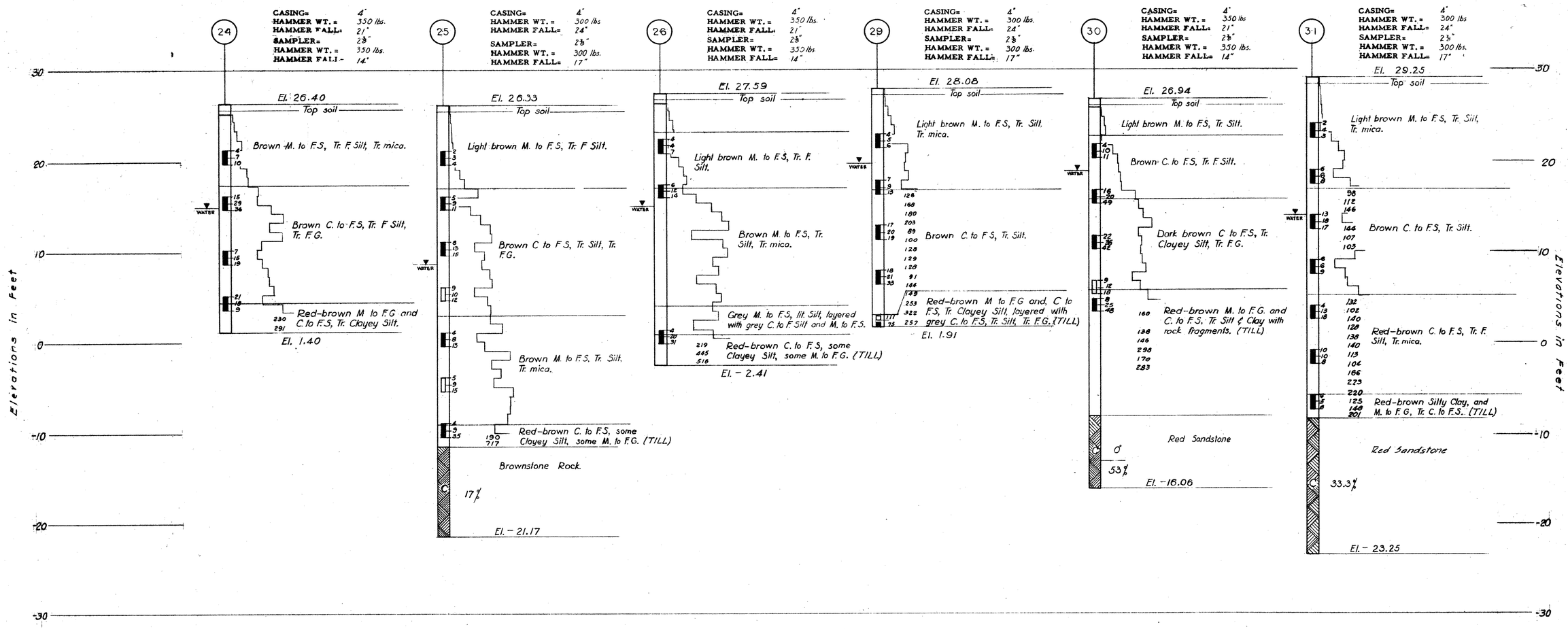

BORINGS

SCALE: VERT: 3/16" = 1'-0"
HORIZ: 1" = 100 BLOWS

THE INFORMATION, INCLUDING ESTIMATED QUANTITIES OF WORK, SHOWN ON THESE SHEETS IS BASED ON LIMITED INVESTIGATIONS BY THE STATE AND IS IN NO WAY WARRANTED TO INDICATE THE TRUE CONDITIONS OR ACTUAL QUANTITIES OR DISTRIBUTION OF QUANTITIES OF WORK WHICH WILL BE REQUIRED.

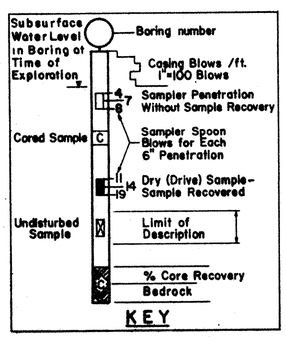

ABBREVIATIONS

C.	Coarse
F.	Fine
M.	Medium
G.	Gravel
S.	Sand
Boul.	Boulders
Cobb.	Cobbles
lit.	little
Tr.	Trace
Misc.	Miscellaneous
Org.	Organic

REVISIONS		
NO.	DATE	DESCRIPTION

CONNECTICUT
STATE HIGHWAY DEPARTMENT

TOWN OF WETHERSFIELD
INTERSTATE ROUTE 91
OVER
FRONTAGE ROAD CONNECTOR
BORINGS

DESIGNED BY LEONARD S. WEGMAN CO., CONTRACTING ENGINEER
SCALES AS SHOWN
MADE BY ERC DATE 1-16-61
CHECKED BY LK DATE 1-16-61
APPROVED Hubert Mandelbaum DATE 1-16-61
PROJECT NO. 159-91
BRIDGE SHEET NO. 2 OF 12

TRIANGLE LITHO PRINT CO., INC.

159 91

M261 01

FORM NO. ENG. 18 ED. 11-52

PUB. ROAD DIV. NO.	STATE	TOWN	FED. AID PROJ. NO.	PROJ. NO.	YEAR	ROUTE NO.	SHEET NO.	TOTAL SHEETS
1	CONN.	WETHERSFIELD	I-91-2(41)34	159-91	1961	I-91	44	174

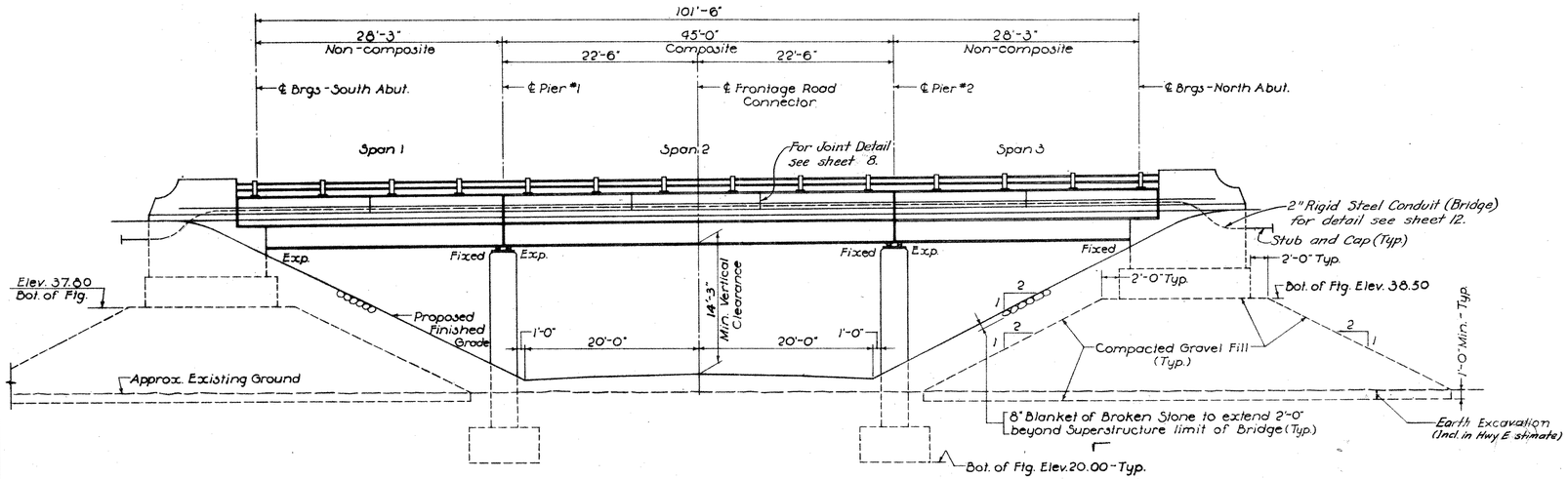

EAST ELEVATION

Scale: 1/8"=1'-0"

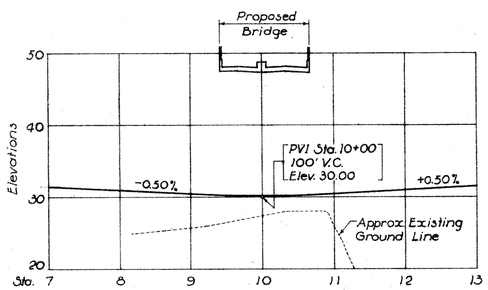

FRONTAGE ROAD CONNECTOR

Scale: Horiz. 1"=100' Vert. 1"=10'

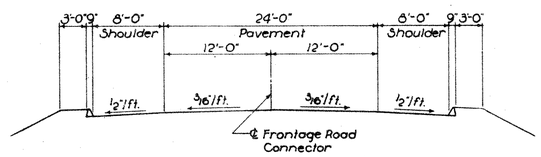

FRONTAGE ROAD CONNECTOR

Scale: 1/8"=1'-0"

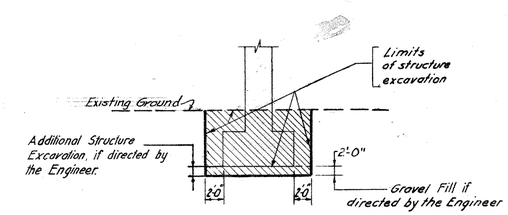

EXCAVATION LIMITS OF PIER

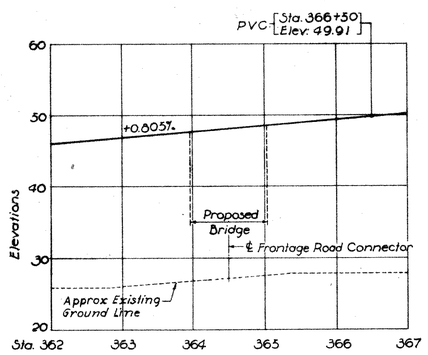

INTERSTATE ROUTE 91 N.B. & S.B.

Scale: Horiz. 1"=100' Vert. 1"=10'

PROFILES

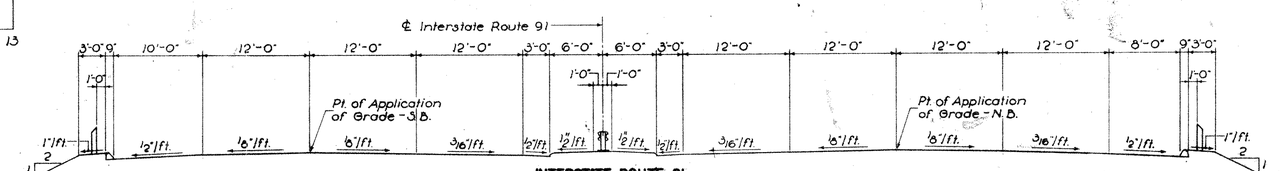

INTERSTATE ROUTE 91

TYPICAL ROADWAY SECTIONS

Scale: 1/8"=1'-0"

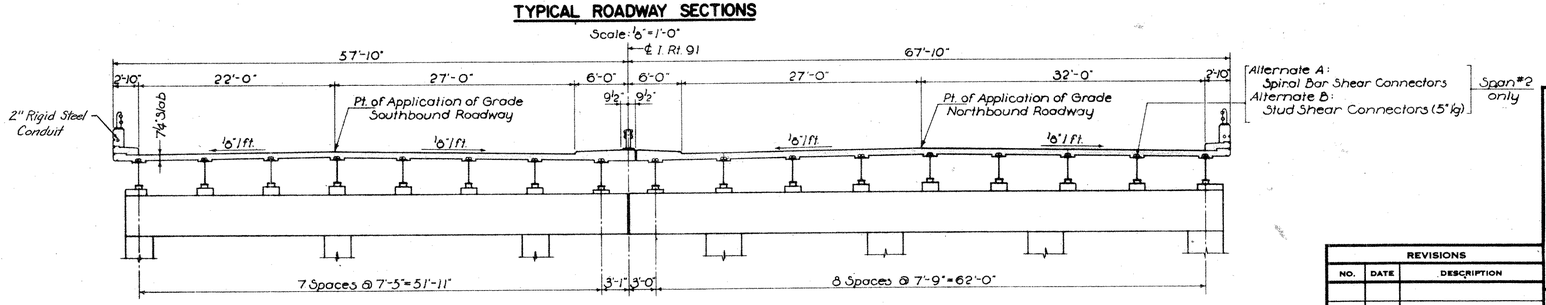

TYPICAL BRIDGE CROSS SECTION

Scale: 1/8"=1'-0"

NO REVISIONS SUBMITTED FOR THIS SHEET

THE INFORMATION, INCLUDING ESTIMATED QUANTITIES OF WORK, SHOWN ON THESE SHEETS IS BASED ON LIMITED INVESTIGATIONS BY THE STATE AND IS IN NO WAY WARRANTED TO INDICATE THE TRUE CONDITIONS OR ACTUAL QUANTITIES OR DISTRIBUTION OF QUANTITIES OF WORK WHICH WILL BE REQUIRED.

REVISIONS		
NO.	DATE	DESCRIPTION

CONNECTICUT
STATE HIGHWAY DEPARTMENT
TOWN OF WETHERSFIELD
INTERSTATE ROUTE 91
OVER
FRONTAGE ROAD CONNECTOR
SECTIONS AND ELEVATIONS

DESIGNED BY LEONARD S. WEGMAN CO., CONTRACTING ENGINEER

SCALES As shown

MADE BY H. L. DATE 1-16-61

CHECKED BY LK DATE 1-16-61

APPROVED Herbert Vandelbom DATE 1-16-61

PROJECT NO. 159-91

BRIDGE SHEET NO. 3 OF 12

TRIANGLE LITHO PRINT CO., INC.

159 91

M 261 01

44

FORM NO. ENG. 15 ED. 11-62

PUB. ROAD DIV. NO.	STATE	TOWN	FED. AID PROJ. NO.	PROJ. NO.	YEAR	ROUTE NO.	SHEET NO.	TOTAL SHEETS
1	CONN.	WETHERSFIELD	I-91-2(134)	159-91	1961	I-91	45	174

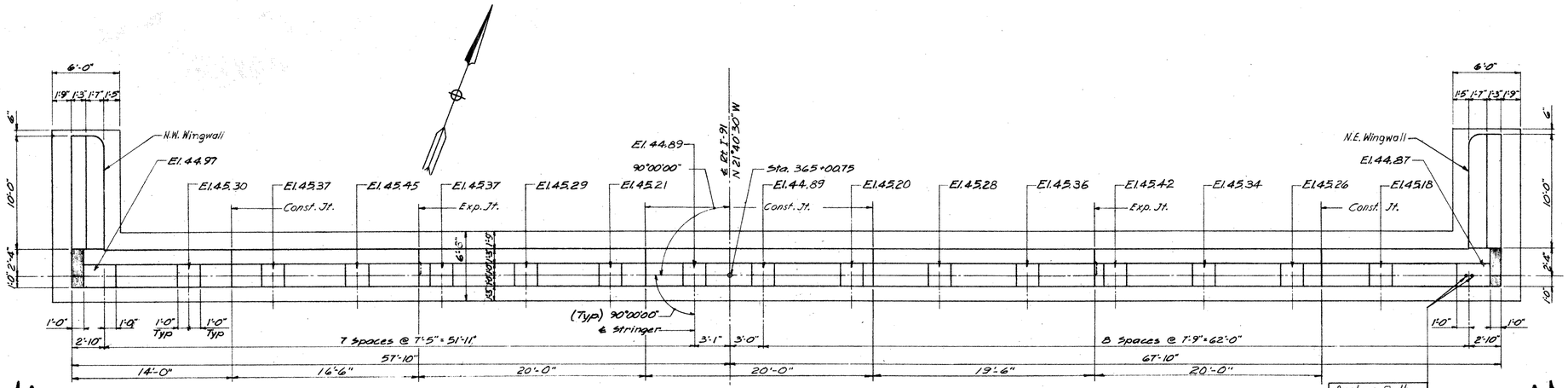

PLAN OF NORTH ABUTMENT

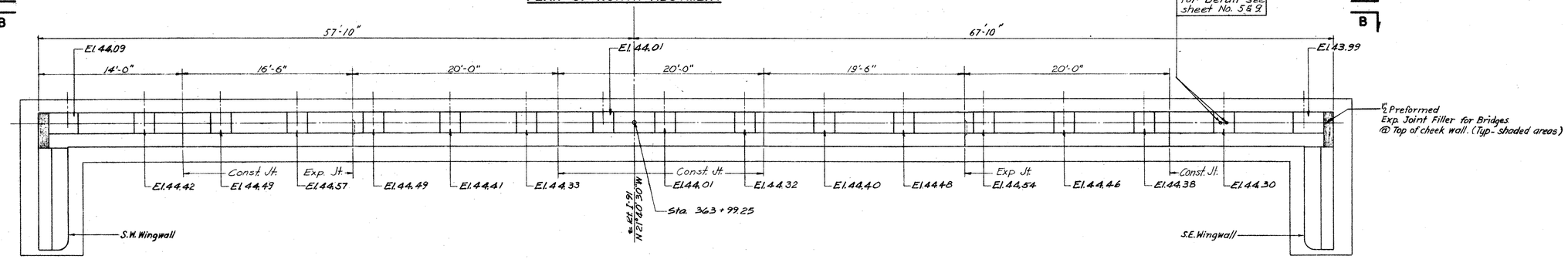

PLAN OF SOUTH ABUTMENT

Note: Dimensions not shown are same as for North Abutment.

Abbreviations:

N. — North
E. — East
S. — South
W. — West
W-W. — Wing Wall
Const. — Construction

NO REVISIONS SUBMITTED FOR THIS SHEET

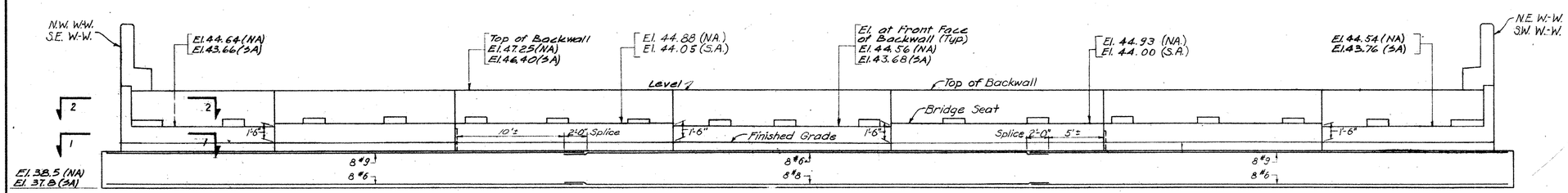

ELEVATION A—A (ELEVATION OF NORTH ABUTMENT)

ELEVATION B—B SIMILAR EXCEPT AS NOTED

Note: For joint spacing of South Abutment see "Plan of South Abutment" on this sheet.

THE INFORMATION, INCLUDING ESTIMATED QUANTITIES OF WORK, SHOWN ON THESE SHEETS IS BASED ON LIMITED INVESTIGATIONS BY THE STATE AND IS IN NO WAY WARRANTED TO INDICATE THE TRUE CONDITIONS OR ACTUAL QUANTITIES OR DISTRIBUTION OF QUANTITIES OF WORK WHICH WILL BE REQUIRED.

CONNECTICUT
STATE HIGHWAY DEPARTMENT

TOWN OF WETHERSFIELD
INTERSTATE ROUTE 91
OVER
FRONTAGE ROAD CONNECTOR
ABUTMENTS

DESIGNED BY LEONARD S. WEGMAN CO., CONTRACTING ENGINEER
SCALES 3/16" = 1'-0"
MADE BY LP DATE 1-16-61
CHECKED BY LK DATE 1-16-61
APPROVED Andrew V. Vandellen DATE 1-16-61

PROJECT NO. 159-91
BRIDGE SHEET NO. 4 OF 12

REVISIONS		
NO.	DATE	DESCRIPTION

NOTES:

ELEVATIONS OF BRIDGE SEAT ARE AT FRONT FACE OF BACKWALL
ONLY LONGITUDINAL REINFORCEMENT IN ABUTMENT FOOTING IS SHOWN, SEE TYPICAL ABUTMENT SECTION FOR TRANSVERSE REINFORCEMENT.

REFERENCE NOTES:

FOR ABUTMENT & WING WALL DETAILS & SUBSTRUCTURE NOTES SEE BRIDGE SHEET NO. 5
FOR SECTIONS 1-1 AND 2-2 SEE SHEET NO. 5
FOR BEARING PAD DETAILS SEE SHEET NO. 5

TRIANGLE LITHO PRINT CO., INC.

159 91

261 01

FORM NO. ENG. 18 ED. 11-58

PUB. ROAD DIV. NO.	STATE	TOWN	FED. AID PROJ. NO.	PROJ. NO.	YEAR	ROUTE NO.	SHEET NO.	TOTAL SHEETS
1	CONN.	WETHERSFIELD	I-91-2(413)4	159-91	1961	I-91	46	174

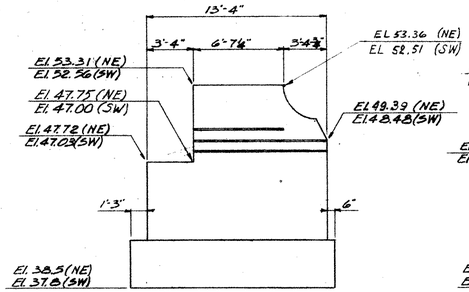

NORTHEAST & SOUTHWEST WING WALLS
Scale 3/16"=1'-0"

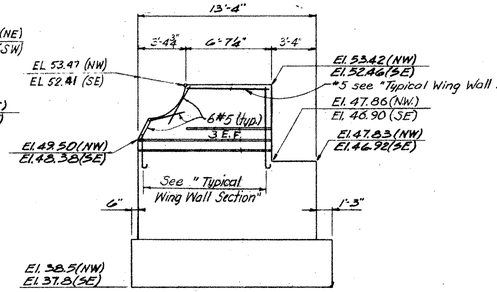

NORTHWEST & SOUTHEAST WING WALLS
Scale 3/16"=1'-0"

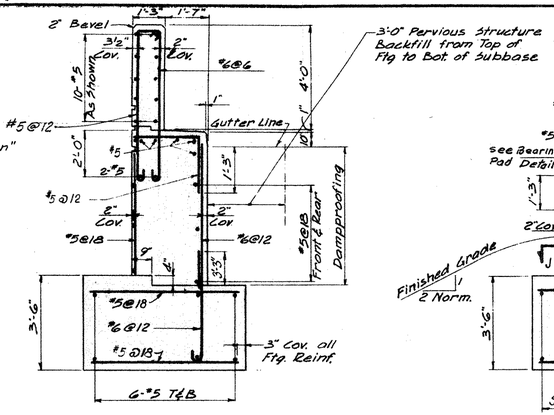

TYPICAL WING WALL SECTION
Scale 3/8"=1'-0"

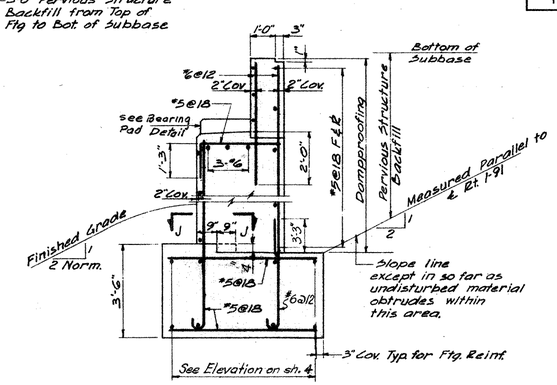

TYPICAL ABUTMENT SECTION
Scale 3/8"=1'-0"

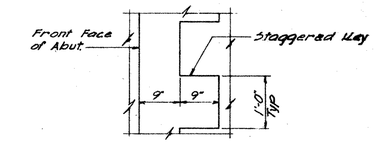

SECTION J-J
Scale 3/4"=1'-0"

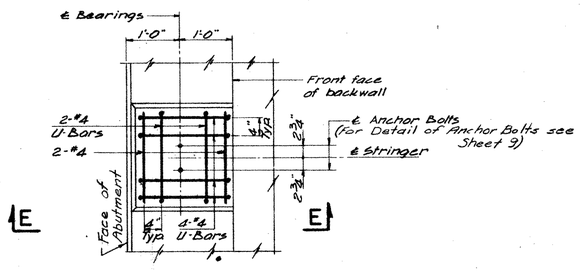

PLAN

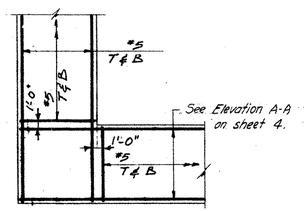

CORNER DETAILS FOR FOOTING REINFORCEMENT
Scale 3/16"=1'-0"

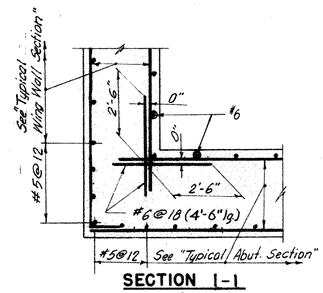

SECTION 1-1
Scale 3/8"=1'-0"

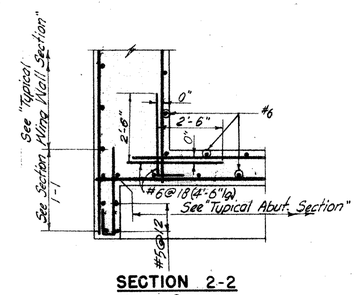

SECTION 2-2
Scale 3/8"=1'-0".

For location of Sections "1-1" & "2-2" see Sheet 4.

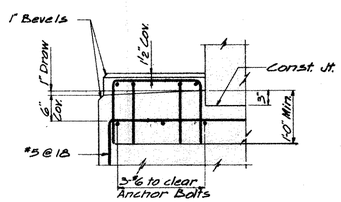

SECTION E-E

BEARING PAD DETAIL
Scale 3/4"=1'-0"

NO REVISIONS SUBMITTED FOR THIS SHEET

THE INFORMATION, INCLUDING ESTIMATED QUANTITIES OF WORK, SHOWN ON THESE SHEETS IS BASED ON LIMITED INVESTIGATIONS BY THE STATE AND IS IN NO WAY WARRANTED TO INDICATE THE TRUE CONDITIONS OR ACTUAL QUANTITIES OR DISTRIBUTION OF QUANTITIES OF WORK WHICH WILL BE REQUIRED.

SUBSTRUCTURE NOTES

MAXIMUM DESIGN BEARING PRESSURE FOR FOOTINGS IS: ABUTMENTS: 2 T.S.F
PIERS: 1.9 T.S.F.

FOR DETAILS OF ANCHOR BOLTS SEE SHEET NO. 9
THE BEARING PAD ELEVATIONS SHOWN ON PLANS OF PIERS AND ABUTMENTS ARE THE ELEVATIONS OF THE BOTTOMS OF BASE PLATES.

COST OF FURNISHING AND PLACING CAULKING COMPOUND FOR JOINT FILLERS TO BE INCLUDED IN THE ITEMS FOR JOINT FILLERS FOR BRIDGES.
UNLESS OTHERWISE NOTED, THE SPLICE OF MAIN REINFORCEMENT SHALL BE 35 BAR DIAMETERS, DISTRIBUTION AND TEMPERATURE REINFORCEMENT - 20 DIAMETERS. NO REINFORCING STEEL IS TO BE PASSED THROUGH EXPANSION JOINTS. JOINT SEAL FOR ABUTMENTS TO BE EXTENDED FROM TOP OF FOOTING TO TOP OF BACKWALL, FOR EXTENT OF JOINT SEAL IN WING WALL SEE DETAILS.

REVISIONS		
NO.	DATE	DESCRIPTION

CONNECTICUT
STATE HIGHWAY DEPARTMENT
TOWN OF WETHERSFIELD
INTERSTATE ROUTE 91
OVER
FRONTAGE ROAD CONNECTOR
ABUTMENT DETAILS

DESIGNED BY LEONARD S. WEGMAN CO., CONTRACTING ENGINEER
SCALES AS SHOWN
MADE BY L.P. DATE 1-16-61
CHECKED BY LK DATE 1-16-61
APPROVED [signature] DATE 1-16-61
PROJECT NO. 159-91
BRIDGE SHEET NO. 5 OF 12

FORM NO. ENG-PR ED. 11-58

PUB. ROAD DIV. NO.	STATE	TOWN	FED. AID PROJ. NO.	PROJ. NO.	YEAR	ROUTE NO.	SHEET NO.	TOTAL SHEETS
1	CONN.	WETHERSFIELD	I-91-2(41)34	159-91	1961	I-91	47	174

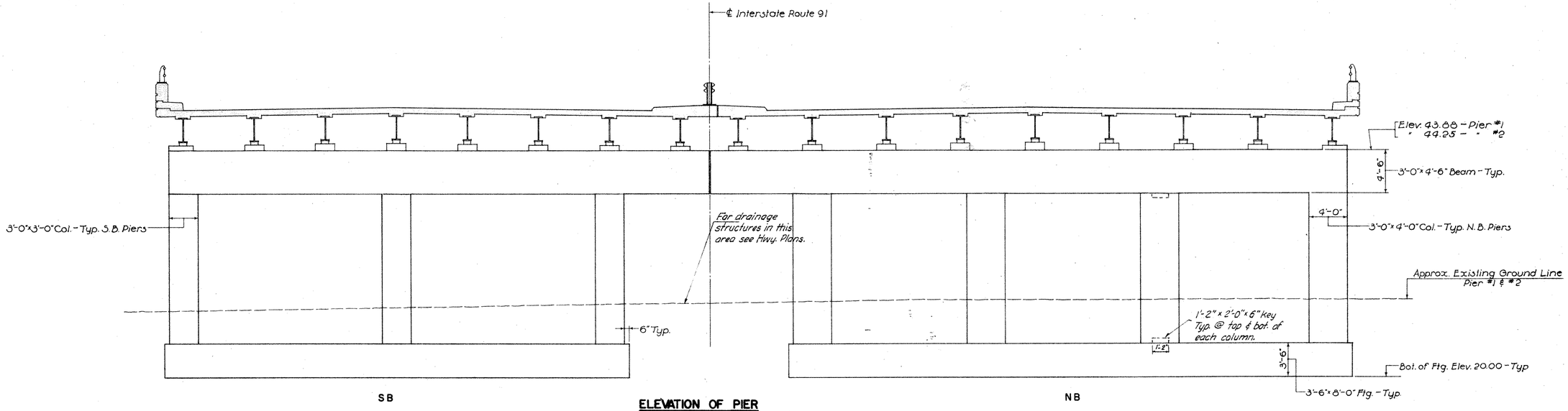

ELEVATION OF PIER

Scale: 3/16" = 1'-0"

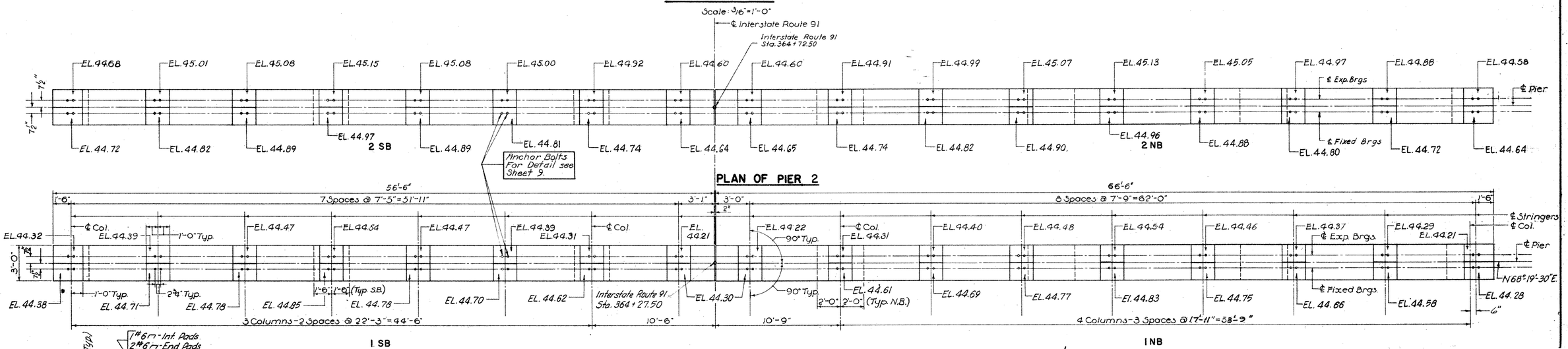

PLAN OF PIER 2

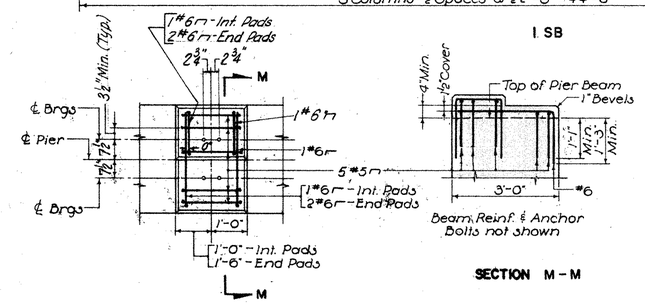

TYPICAL BEARING PAD DETAIL

Scale: ½" = 1'-0"

PLAN OF PIER 1

Scale: ¼" = 1'-0"

NOTE:
DIMENSIONS OF PIERS NO. 1 & 2 ARE IDENTICAL EXCEPT WHERE OTHERWISE NOTED

REFERENCE NOTE:
FOR ABUTMENT & WING WALL DETAILS & SUBSTRUCTURE NOTES SEE BRIDGE SHEET NO. 5

THE INFORMATION, INCLUDING ESTIMATED QUANTITIES OF WORK, SHOWN ON THESE SHEETS IS BASED ON LIMITED INVESTIGATIONS BY THE STATE AND IS IN NO WAY WARRANTED TO INDICATE THE TRUE CONDITIONS OR ACTUAL QUANTITIES OR DISTRIBUTION OF QUANTITIES OF WORK WHICH WILL BE REQUIRED.

NO REVISIONS SUBMITTED FOR THIS SHEET

REVISIONS		
NO.	DATE	DESCRIPTION

CONNECTICUT
STATE HIGHWAY DEPARTMENT
TOWN OF WETHERSFIELD
INTERSTATE ROUTE 91
OVER
FRONTAGE ROAD CONNECTOR
PIERS

DESIGNED BY LEONARD S. WEGMAN CO., CONTRACTING ENGINEER
SCALES AS SHOWN
MADE BY LR DATE 1-16-61
CHECKED BY LR DATE 1-16-61
APPROVED Herbert Mandelbaum DATE 1-16-61
PROJECT NO. 159-91
BRIDGE SHEET NO. 6 OF 12

TRIANGLE LITHO PRINT CO., INC.

FORM NO. ENG. 12 ED. 11-52

PUB. ROAD DIV. NO.	STATE	TOWN	FED. AID PROJ. NO.	PROJ. NO.	YEAR	ROUTE NO.	SHEET NO.	TOTAL SHEETS
1	CONN.	WETHERSFIELD	I-84-214(34)	159-91	1961	I-91	48	174

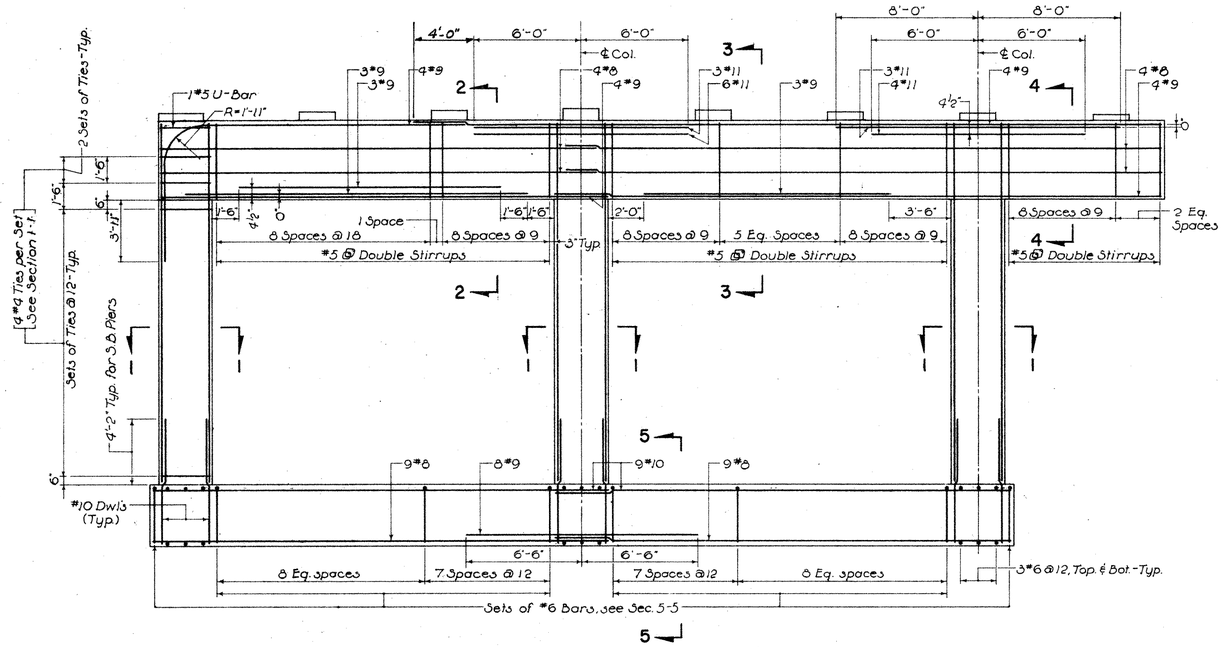

ELEVATION—PIERS 1 SB & 2 SB

Scale: 1/4" = 1'-0"

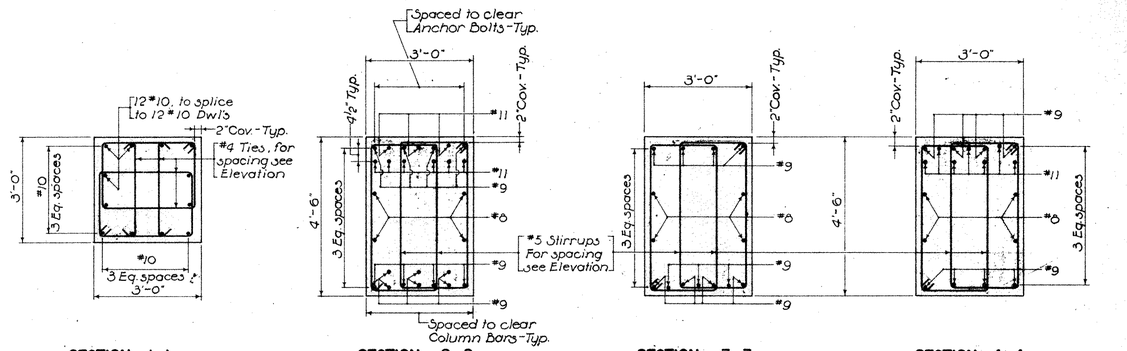

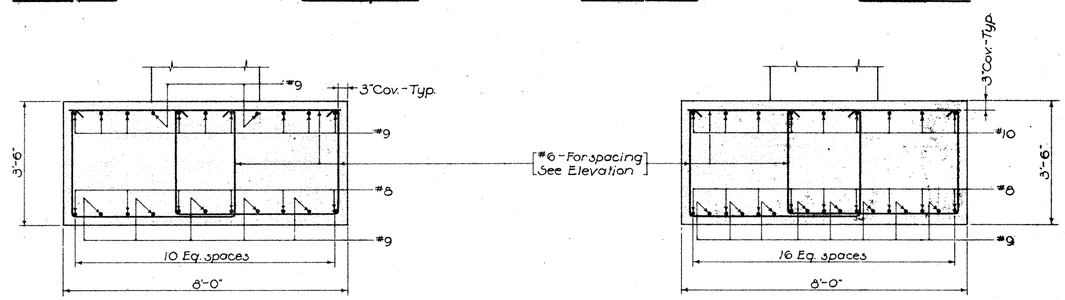

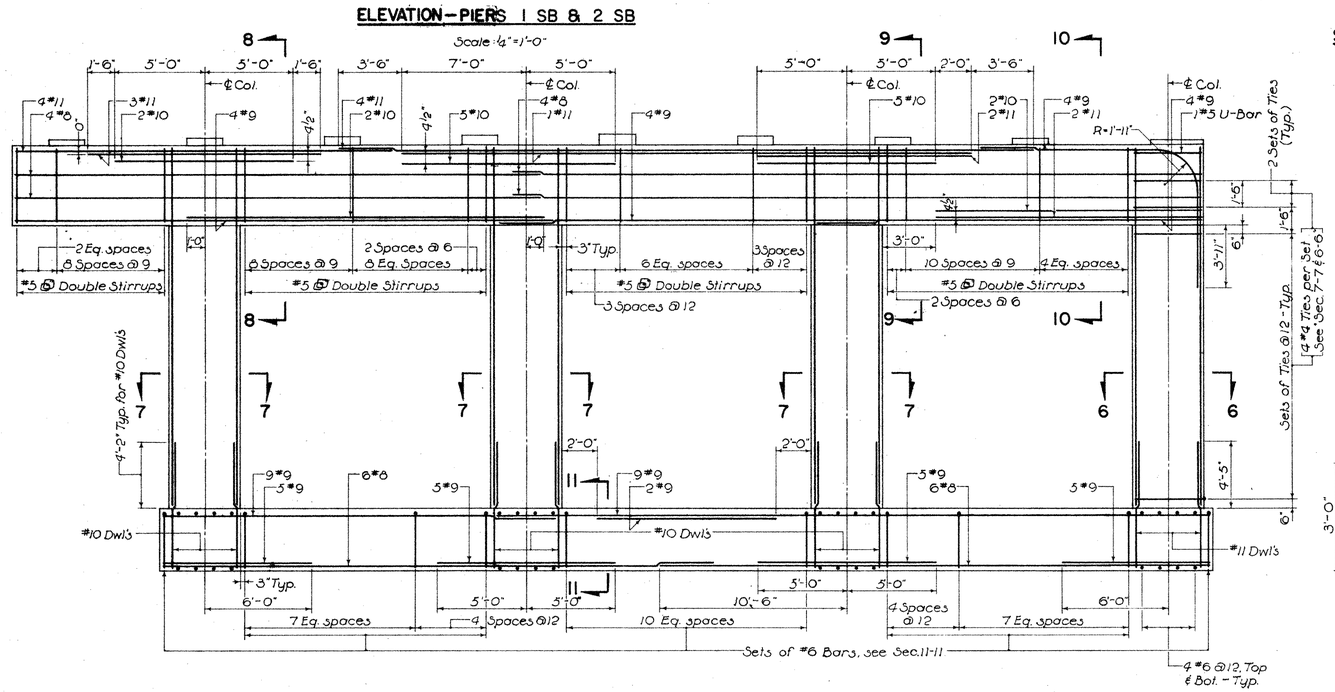

ELEVATION—PIERS 1 NB & 2 NB

Scale: 1/4" = 1'-0"

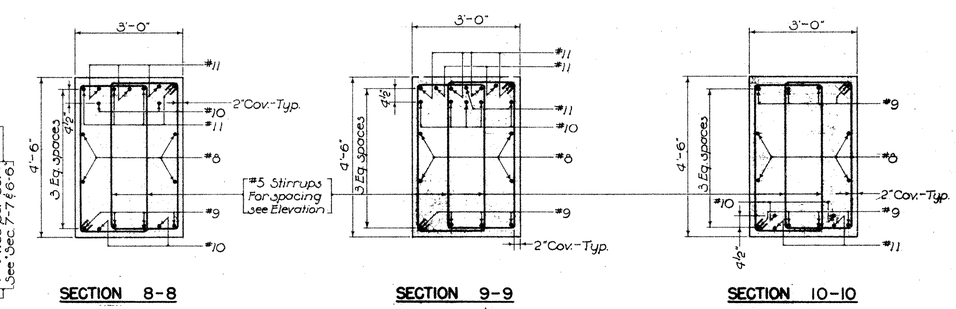

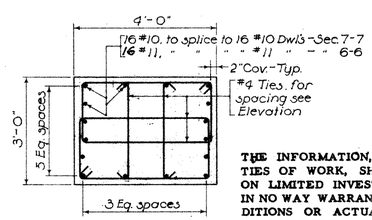

NO REVISIONS SUBMITTED FOR THIS SHEET

THE INFORMATION, INCLUDING ESTIMATED QUANTITIES OF WORK, SHOWN ON THESE SHEETS IS BASED ON LIMITED INVESTIGATIONS BY THE STATE AND IS IN NO WAY WARRANTED TO INDICATE THE TRUE CONDITIONS OR ACTUAL QUANTITIES OR DISTRIBUTION OF QUANTITIES OF WORK WHICH WILL BE REQUIRED.

REFERENCE NOTE:
FOR ABUTMENT & WING WALL DETAILS & SUBSTRUCTURE NOTES SEE BRIDGE SHEET NO. 5

Notes:
1. Keys at top and bottom of each column not shown see "Elevation of Pier" on Sheet 6.
2. Pier reinf. to be placed to clear anchor bolts. Beam and footing reinf. to be placed to clear vertical column reinforcement.

REVISIONS		
NO.	DATE	DESCRIPTION

CONNECTICUT
STATE HIGHWAY DEPARTMENT
TOWN OF WETHERSFIELD
INTERSTATE ROUTE 91
OVER
FRONTAGE ROAD CONNECTOR
PIER DETAILS

DESIGNED BY LEONARD S. WEGMAN CO., CONTRACTING ENGINEER
SCALES 1/2"=1'-0" Except as noted
MADE BY LP DATE 1-16-61
CHECKED BY LK DATE 1-16-61
APPROVED Walter V. Wandelbo DATE 1-16-61
PROJECT NO. 159-91
BRIDGE SHEET NO. 7 OF 12

TRIANGLE LITHO PRINT CO., INC. 55820

FORM NO. ENG. 15 ED. 11-52

FED. ROAD DIV. NO.	STATE	TOWN	FED. AID PROJ. NO.	PROJ. NO.	YEAR	ROUTE NO.	SHEET NO.	TOTAL SHEETS
1	CONN.	WETHERSFIELD	I-91-2(434)	159-91	1960	I-91	49	174

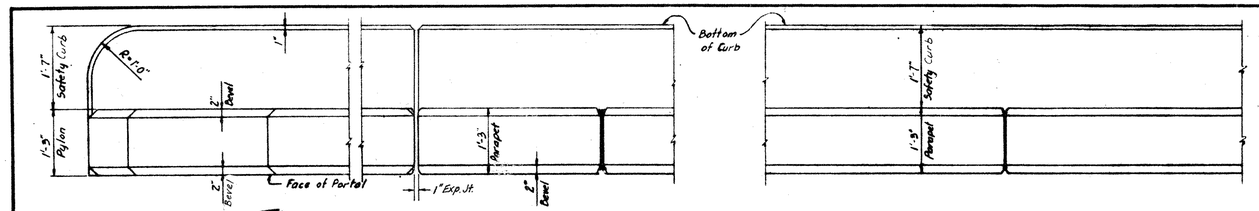

PLAN – PYLON & PARAPET

Scale: 3/4" = 1'-0"

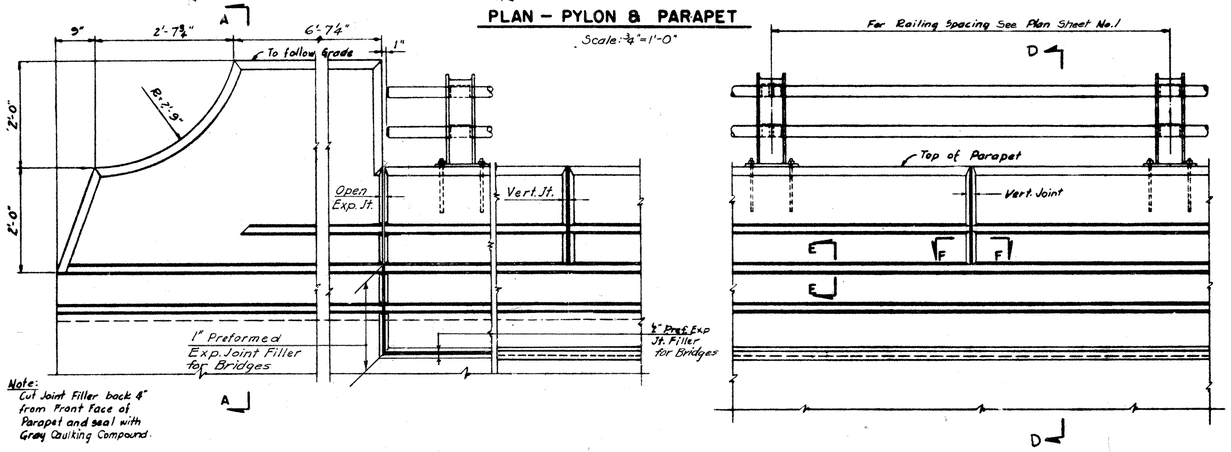

Note: Cut Joint Filler back 4" from Front Face of Parapet and seal with Gray Caulking Compound.

ELEVATION – PYLON, RAILING & PARAPET

Scale: 3/4" = 1'-0"

After Joint Seal has been applied, vehicles will be prohibited from running directly on joint for a seven day period.

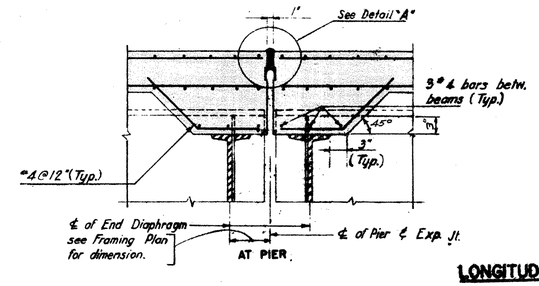

LONGITUDINAL SECTION

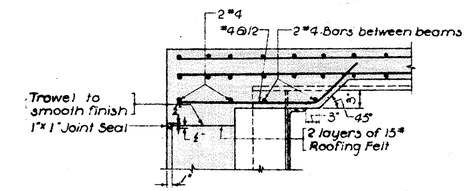

AT ABUTMENT

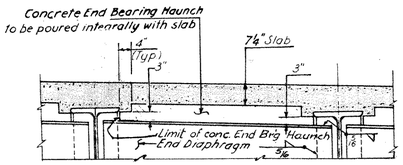

SLAB SECTION AT END DIAPHRAGM

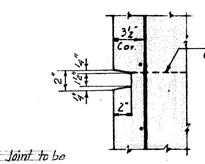

SECTION E-E

Scale: 1 1/2" = 1'-0"

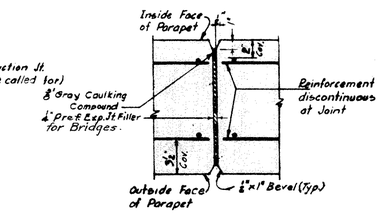

SECTION F-F

Joints to be located at center of alternate railing panels See Elevation, Bridge Sheet No. 3

Scale: 1 1/2" = 1'-0"

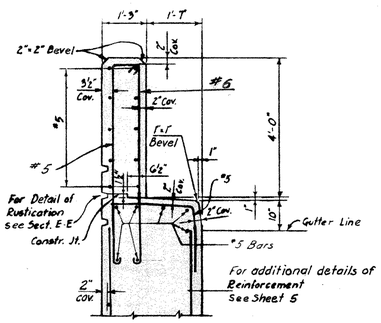

SECTION A-A

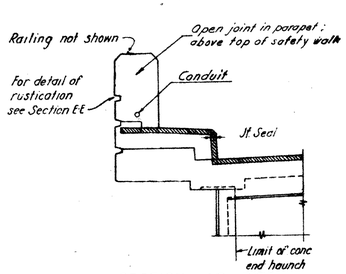

SECTION AT PIER

PARAPET & SAFETY CURB DETAILS

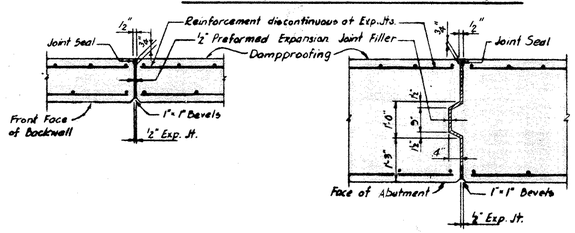

Note: Key at Abutment to extend from Top of Footing to within 1'-0" of Top of Bridge Seat.

AT BACKWALL

AT ABUTMENT STEM

EXPANSION JOINT DETAILS

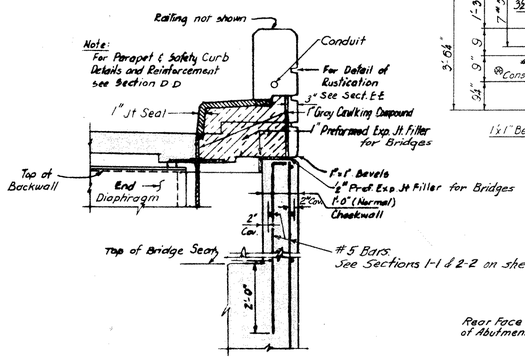

SECTION AT ABUTMENT

® Concrete above this Construction Joint to be poured 10 days (minimum) after slab.

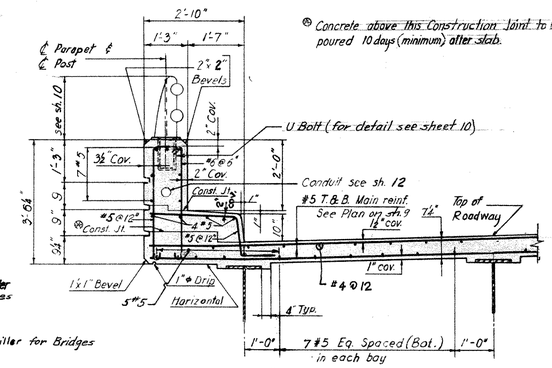

SLAB SECTION

(Section D-D)

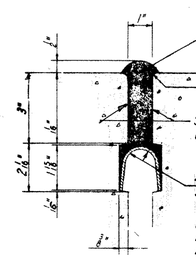

Note: Cost of furnishing and placing Gray Caulking Compound to be included in Contract Item of Pref. Exp. Jt. Filler for bridges

Neoprene plates shall be paid for under the item for "Neoprene Plate for Bridge Expansion Joint."

DETAIL "A"

Scale: 4" = 1'-0"

NO REVISIONS SUBMITTED FOR THIS SHEET

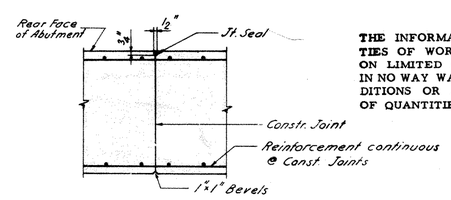

CONSTRUCTION JOINT DETAIL FOR ABUTMENTS

THE INFORMATION, INCLUDING ESTIMATED QUANTITIES OF WORK, SHOWN ON THESE SHEETS IS BASED ON LIMITED INVESTIGATIONS BY THE STATE AND IS IN NO WAY WARRANTED TO INDICATE THE TRUE CONDITIONS OR ACTUAL QUANTITIES OR DISTRIBUTION OF QUANTITIES OF WORK WHICH WILL BE REQUIRED.

01459

REVISION		
NO.	DATE	DESCRIPTION

CONNECTICUT
STATE HIGHWAY DEPARTMENT
TOWN OF WETHERSFIELD
INTERSTATE ROUTE 91 OVER FRONTAGE ROAD CONNECTOR
PARAPET & SLAB DETAILS

DESIGNED BY LEONARD S. WEGMAN CO. CONTRACTING ENGINEER
SCALES 1/4" = 1'-0" except as noted
MADE BY WH DATE 1-16-61
CHECKED BY LK DATE 1-16-61
APPROVED [signature] DATE 1-16-61
PROJECT NO. 159-91
BRIDGE SHEET NO. 8 of 12

159 91

M 261 01

49

FORM NO. ENG. 15 ED. 11-52

PUB. ROAD DIV. NO.	STATE	TOWN	FED. AID PROJ. NO.	PROJ. NO.	YEAR	ROUTE NO.	SHEET NO.	TOTAL SHEETS
1	CONN.	WETHERSFIELD	I-91-2(41)34	159-91	1961	I-91	50	174

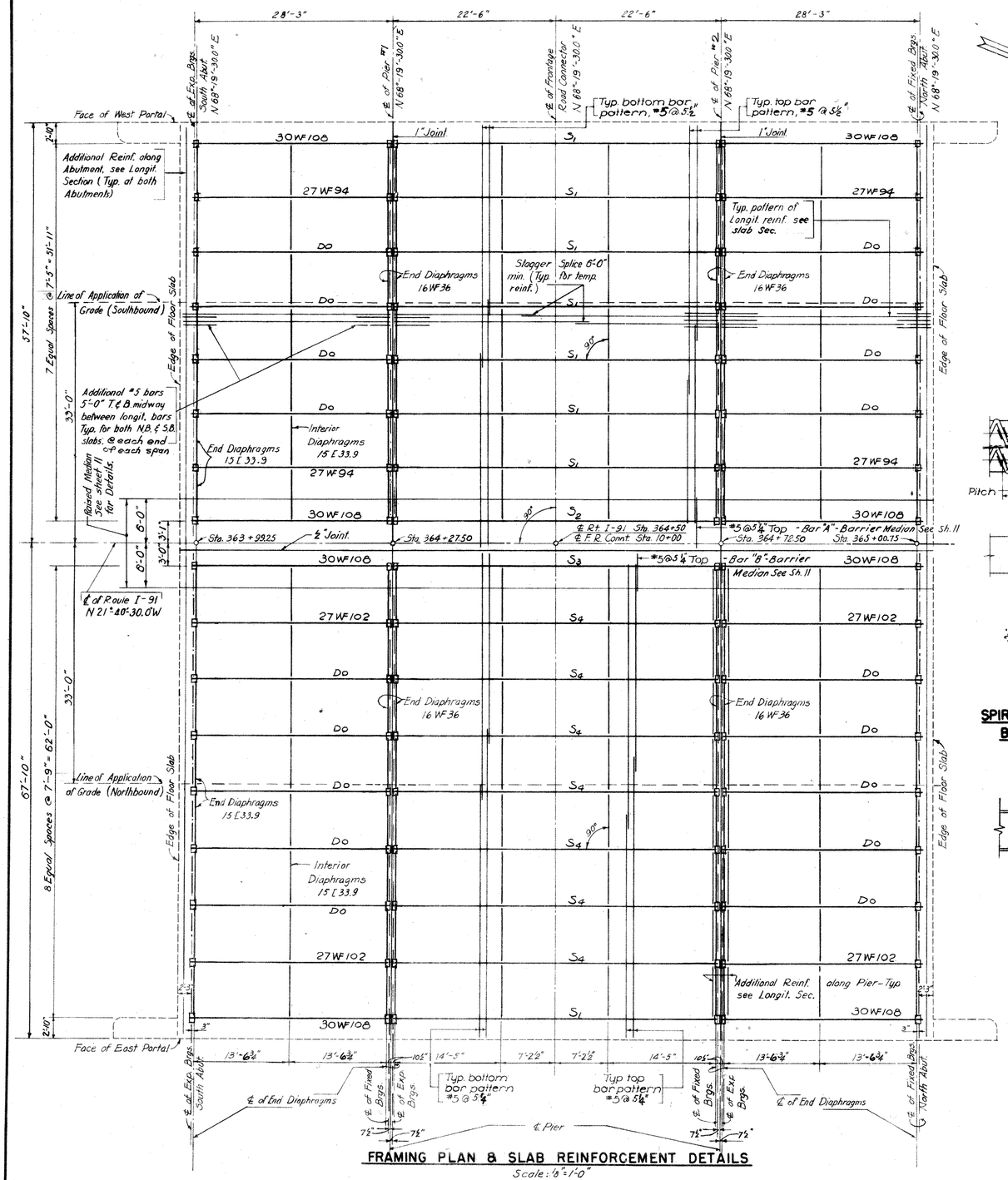

FRAMING PLAN & SLAB REINFORCEMENT DETAILS

Scale: ⅛" = 1'-0"

Note: For additional reinf. details see "Slab Section" & "Longitudinal Section" on Sheet No. 8 and "Barrier Median Section" on Sheet No. 11

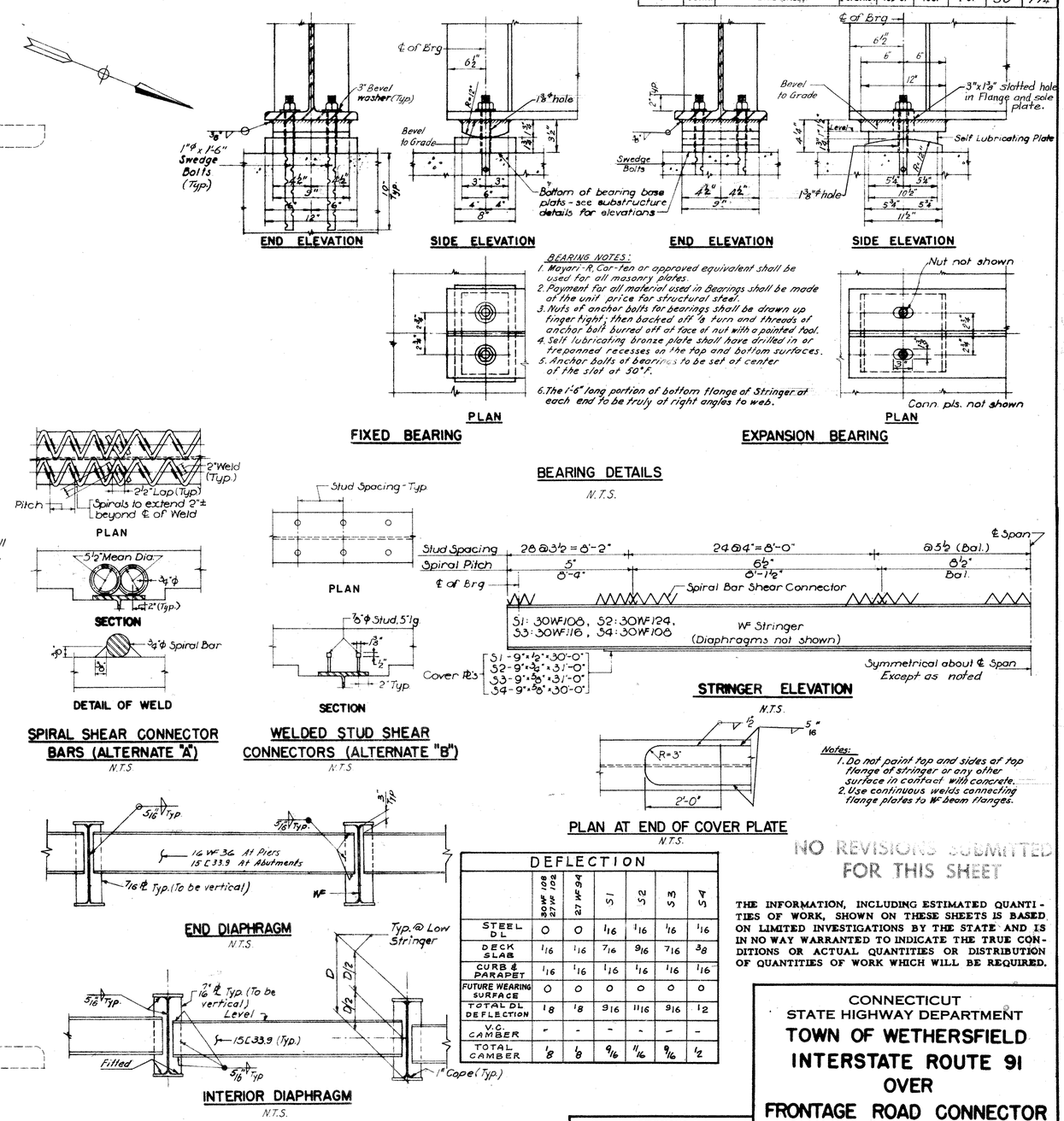

BEARING NOTES:

1. Meyari-R, Cor-ten or approved equivalent shall be used for all masonry plates.
2. Payment for all material used in Bearings shall be made at the unit price for structural steel.
3. Nuts of anchor bolts for bearings shall be drawn up finger tight; then backed off ⅙ turn and threads of anchor bolt burred off at face of nut with a pointed tool.
4. Self lubricating bronze plate shall have drilled in or trepanned recesses on the top and bottom surfaces.
5. Anchor bolts of bearings to be set of center of the slot at 50°F.
6. The 1'-6" long portion of bottom flange of Stringer at each end to be truly at right angles to web.

BEARING DETAILS

N.T.S.

DEFLECTION

	30WF108 27WF102	27WF94	S1	S2	S3	S4
STEEL DL	0	0	1/16	1/16	1/16	1/16
DECK SLAB	1/16	1/16	7/16	9/16	7/16	3/8
CURB & PARAPET	1/16	1/16	1/16	1/16	1/16	1/16
FUTURE WEARING SURFACE	0	0	0	0	0	0
TOTAL DL DEFLECTION	1/8	1/8	9/16	11/16	9/16	1/2
V.G. CAMBER	-	-	-	-	-	-
TOTAL CAMBER	1/8	1/8	9/16	11/16	9/16	1/2

ALL DIMENSIONS SHOWN ON FRAMING PLAN ARE HORIZONTAL DIMENSIONS. UNLESS OTHERWISE NOTED, THE SPLICES OF MAIN REINFORCEMENT SHALL BE 20 BAR DIAMETERS, DISTRIBUTION AND TEMPERATURE REINFORCEMENT 20 DIAMETERS. NO REINFORCING STEEL IS TO BE PASSED THROUGH EXPANSION JOINTS.

ALL WELDING SHALL CONFORM TO THE CURRENT SPECIFICATIONS OF AWS AND AS SUPPLEMENTED BY CONNECTICUT STATE HIGHWAY DEPARTMENT.

NO REVISIONS SUBMITTED FOR THIS SHEET

THE INFORMATION, INCLUDING ESTIMATED QUANTITIES OF WORK, SHOWN ON THESE SHEETS IS BASED ON LIMITED INVESTIGATIONS BY THE STATE AND IS IN NO WAY WARRANTED TO INDICATE THE TRUE CONDITIONS OR ACTUAL QUANTITIES OR DISTRIBUTION OF QUANTITIES OF WORK WHICH WILL BE REQUIRED.

REVISIONS		
NO.	DATE	DESCRIPTION

CONNECTICUT
STATE HIGHWAY DEPARTMENT

TOWN OF WETHERSFIELD
INTERSTATE ROUTE 91
OVER
FRONTAGE ROAD CONNECTOR
SUPERSTRUCTURE DETAILS

DESIGNED BY LEONARD S. WEGMAN CO., CONTRACTING ENGINEER

SCALES As Shown
MADE BY H.L. DATE 1-16-61
CHECKED BY L.K. DATE 1-16-61
APPROVED [signature] DATE 1-16-61

PROJECT NO. 159-91
BRIDGE SHEET NO. 9 OF 12

159 91 261 01 50

PUB. ROAD DIV. No	STATE	TOWN	FED. AID PROJ. No	PROJ No	YEAR	ROUTE No	SHEET No	TOTAL SHEETS
1	CONN.	WETHERSFIELD	I-91-2(413)4	159-91	1981	I-91	51	174

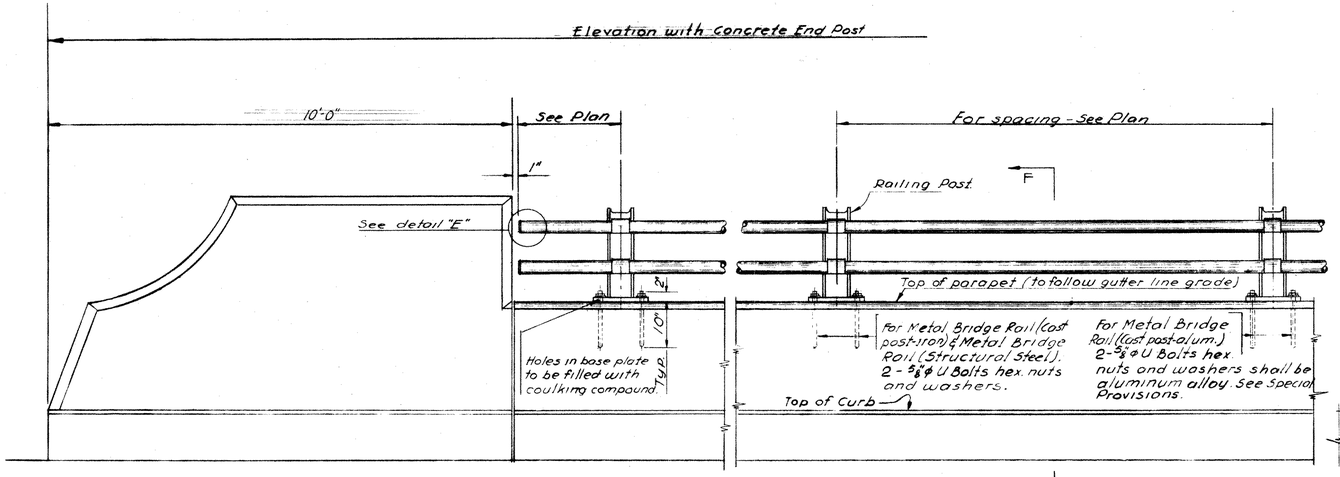

ELEVATION
CONC. END POST AND RAIL
Scale 3/4" = 1'-0"

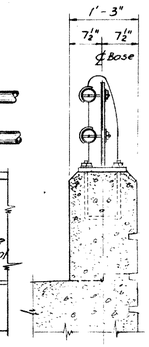

SECTION FF
Scale 3/4" = 1'-0"

METAL BRIDGE RAIL
(STRUCTURAL STEEL)

All posts to be 6WF20 Structural steel post.
All rails to be 2½"ϕ Standard Steel Pipe.
Railing posts shall be vertical.
If necessary shim with lead wool and caulk. Cost to be included in item Metal Bridge Rail (Structural Steel)
For painting see Special Provisions.
All posts and base plates to be of Structural Steel conforming to A.S.T.M. A-7

METAL BRIDGE RAIL
(CAST POST-IRON)

All posts to be Malleable Iron Casting conforming to A.S.T.M. A-47 Grade 35018 or Ductile Iron Casting conforming to A.S.T.M. A-339
All rails to be 2½"ϕ Standard Steel Pipe
Railing posts shall be vertical.
If necessary shim with lead wool and caulk. Cost to be included in item Metal Bridge Rail (Cast post-iron)
For painting see Special Provisions.

METAL BRIDGE RAIL
(CAST POST-ALUMINUM)

All posts to be Cast of aluminum See Special Provisions.
All rails to be 3" o.d. x 2.625" i.d. Aluminum Tubing See Special Provisions.
Railing posts shall be vertical.
If necessary shim with aluminum sheets and caulk Cost to be included in item Metal Bridge Rail (Cast post-alum.)
Aluminum railing and posts shall not be painted.

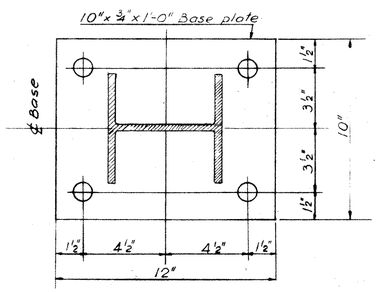

SECTION BB
Scale 3" = 1'-0"

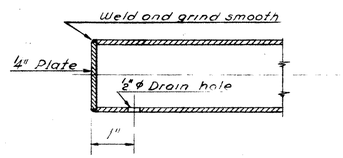

DETAIL "E"
Not to scale

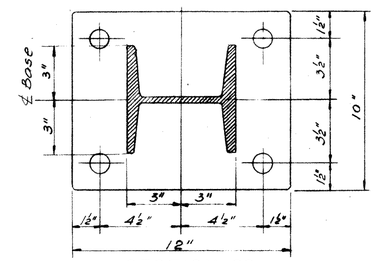

SECTION CC
Scale 3" = 1'-0"

GENERAL NOTES:

Unless otherwise specified on the plans or in the Special Provisions Metal Bridge Rail may be:
Metal Bridge Rail (Structural Steel), Metal Bridge Rail (cast post-iron) or Metal Bridge Rail - (Cast post-aluminum)
Cost of furnishing and setting
5/8"ϕ U bolts, hex., nuts and washers to be included item "Metal Bridge Rail."

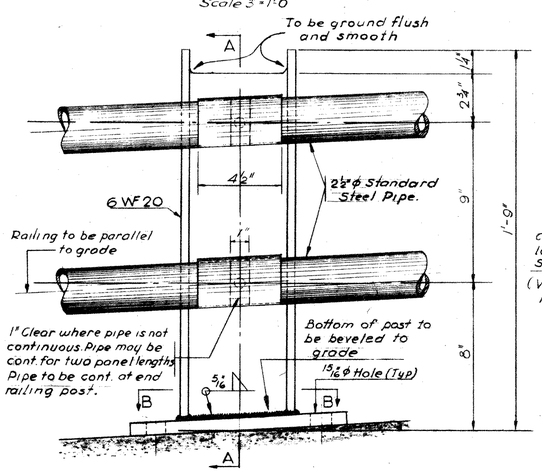

ELEVATION OF POST
Scale 3" = 1'-0"

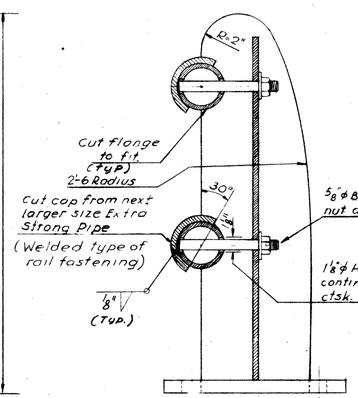

SECTION AA
Scale 3" = 1'-0"

DETAILS
STRUCTURAL STEEL POST
For Metal Bridge Rail (Structural-Steel)

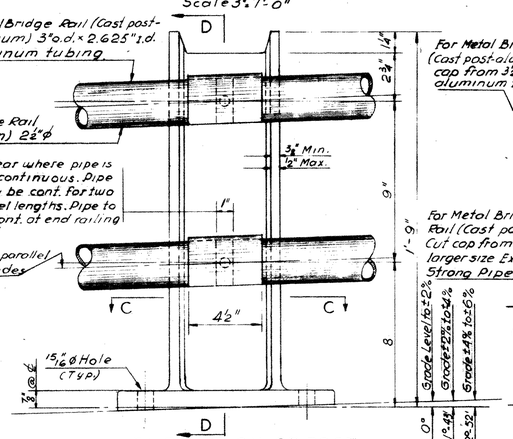

ELEVATION OF POST
Scale 3" = 1'-0"

NOTE

Details of Metal Bridge Railing and fastening similar to details shown for Metal Bridge Railing (Structural Steel)

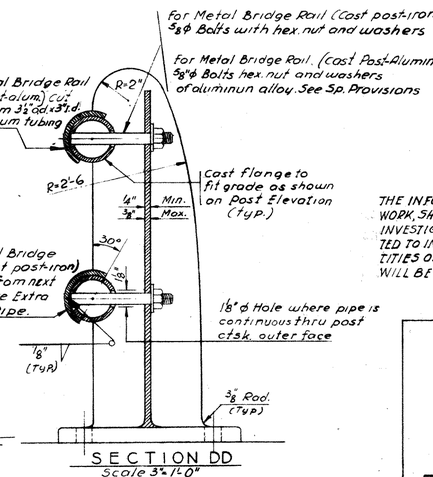

SECTION DD
Scale 3" = 1'-0"

DETAILS
CAST POST
for Metal Bridge Rail (Cast post-iron)
and
for Metal Bridge Rail (Cast post-aluminum)

NO REVISIONS SUBMITTED FOR THIS SHEET

THE INFORMATION, INCLUDING ESTIMATED QUANTITIES OF WORK, SHOWN ON THESE SHEETS IS BASED ON LIMITED INVESTIGATIONS BY THE STATE AND IS IN NO WAY WARRANTED TO INDICATE THE TRUE CONDITIONS OR ACTUAL QUANTITIES OR DISTRIBUTION OF QUANTITIES OF WORK WHICH WILL BE REQUIRED.

REVISIONS		
No	DATE	DESCRIPTION

CONNECTICUT
STATE HIGHWAY DEPARTMENT
TOWN OF WETHERSFIELD
INTERSTATE ROUTE 91
OVER
FRONTAGE ROAD CONNECTOR
METAL BRIDGE RAIL

DESIGNED BY CHD
SCALES As noted
MADE BY G.M.K. DATE 3/4/80
CHECKED BY C.L.L. DATE 3/4/80
APPROVED [signature] DATE 3/6/80
PROJECT No. 159-91
BRIDGE SHEET No. 10 OF 12

159-91

M261 01

FORM NO. ENG. 15 ED. 11-62

PUB. ROAD DIV. NO.	STATE	TOWN	FED. AID PROJ. NO.	PROJ. NO.	YEAR	ROUTE NO.	SHEET NO.	TOTAL SHEETS
1	CONN.	WETHERSFIELD	I-91-2(41)94	159-91	1961	I-91	52	174

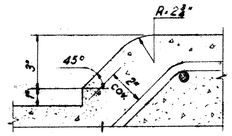

DETAIL "B"
Scale 3"=1'-0"

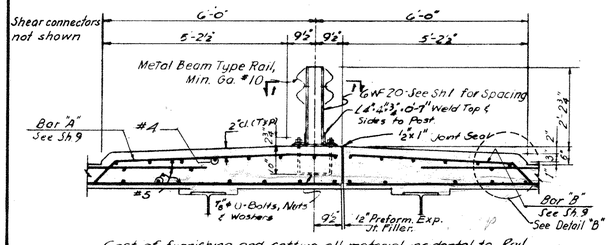

Cost of furnishing and setting all material incidental to Rail Barrier to be included under Metal Beam Type Rail (Bridge) Item.

BARRIER MEDIAN SECTION
SCALE ½"=1'-0"

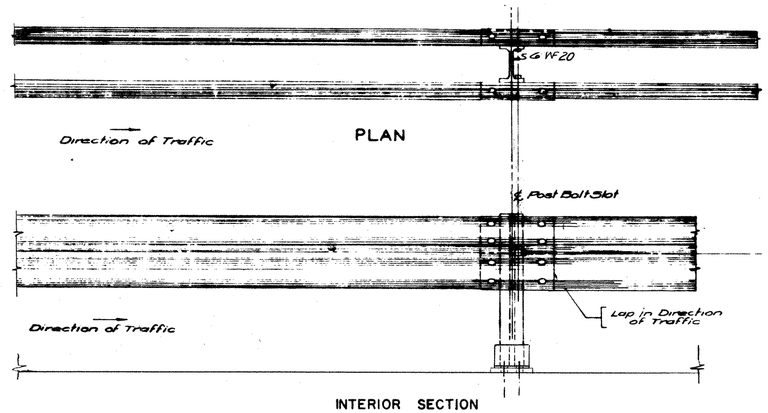

INTERIOR SECTION
ELEVATION

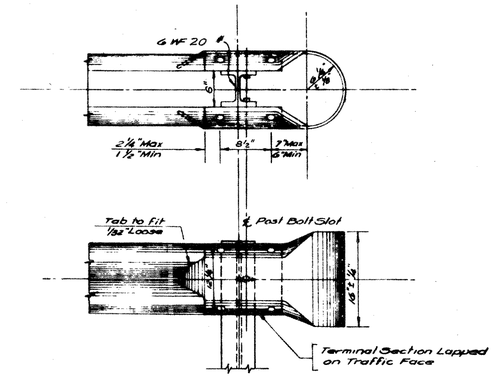

TERMINAL SECTION

NO REVISIONS SUBMITTED FOR THIS SHEET

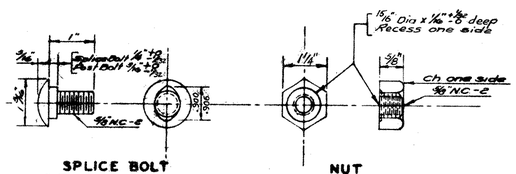

SPLICE BOLT
8 Req'd per Splice
HALF SCALE

NUT
9 req'd Per Rail Element
HALF SCALE

POST BOLT
Same except length
1 req'd per post
Std for each side
length: 1½"

Note: After Galvanizing, the nut must be free running fit on the bolt

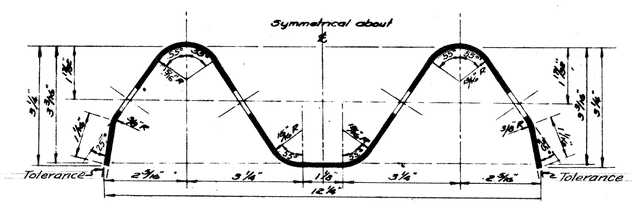

Dimensions subject to Manufacturing tolerances.

SECTION THRU RAIL ELEMENT
HALF SCALE

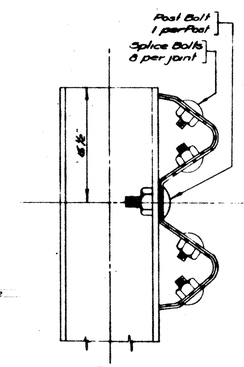

END
Symmetrical about ℄ for Median Divider Installation

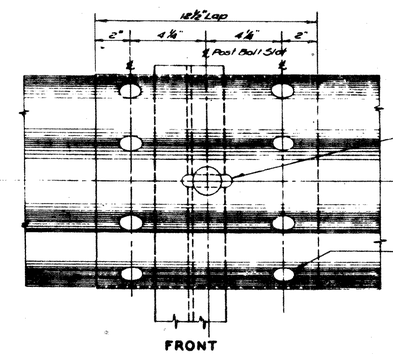

FRONT

RAIL SPLICE
SCALE 3"=1'-0"

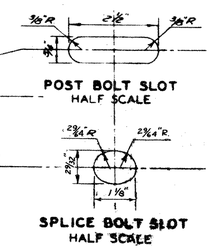

POST BOLT SLOT
HALF SCALE

SPLICE BOLT SLOT
HALF SCALE

NO REVISIONS SUBMITTED FOR THIS SHEET

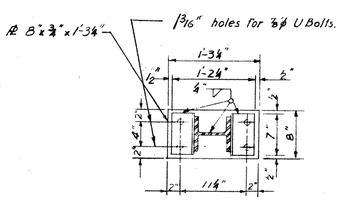

SECTION I-I

THE INFORMATION, INCLUDING ESTIMATED QUANTITIES OF WORK, SHOWN ON THESE SHEETS IS BASED ON LIMITED INVESTIGATIONS BY THE STATE AND IS IN NO WAY WARRANTED TO INDICATE THE TRUE CONDITIONS OR ACTUAL QUANTITIES OR DISTRIBUTION OF QUANTITIES OF WORK WHICH WILL BE REQUIRED.

REVISIONS		
NO.	DATE	DESCRIPTION

CONNECTICUT
STATE HIGHWAY DEPARTMENT

TOWN OF WETHERSFIELD
INTERSTATE ROUTE 91
OVER
FRONTAGE ROAD CONNECTOR
METAL BEAM TYPE RAIL

DESIGNED BY LEONARD S. WEGMAN CO., CONTRACTING ENGINEER
SCALES As Shown
MADE BY WH DATE 1-16-61
CHECKED BY LK DATE 1-16-61
APPROVED [signature] DATE 1-16-61

PROJECT NO. 159-91
BRIDGE SHEET NO. 11 OF 12

TRIANGLE LITHO PRINT CO., INC.

159 91

M261 01

FORM NO. ENG. 15 ED. 11-52

PUB. ROAD DIV. NO.	STATE	TOWN	FED. AID PROJ. NO.	PROJ. NO.	YEAR	ROUTE NO.	SHEET NO.	TOTAL SHEETS
1	CONN.	WETHERSFIELD	I-91-2(43)34	159-91	1961	I-91	53	174

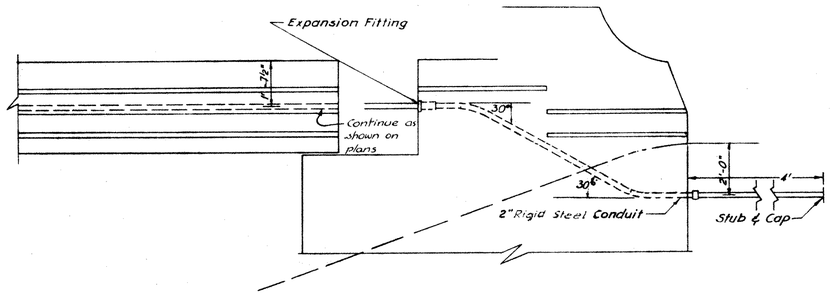

CONDUIT LOCATION AT WINGWALL

Scale: 3/8" = 1'-0"

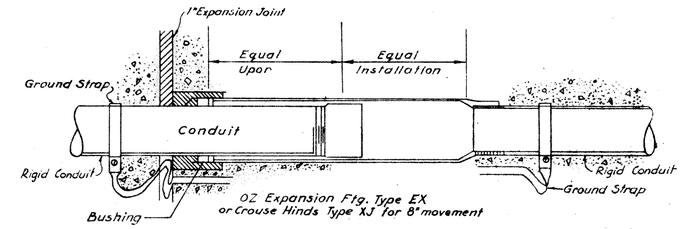

DETAIL OF EXPANSION FITTING

N.T.S.

Provide an Expansion Fitting at all Expansion Joints

NOTE

1. Manufacturer's catalogue references given herein indicate acceptable standards and their mention is not intended to preclude the use of products of other manufacture having the same characteristics.

NO REVISIONS SUBMITTED FOR THIS SHEET

THE INFORMATION, INCLUDING ESTIMATED QUANTITIES OF WORK, SHOWN ON THESE SHEETS IS BASED ON LIMITED INVESTIGATIONS BY THE STATE AND IS IN NO WAY WARRANTED TO INDICATE THE TRUE CONDITIONS OR ACTUAL QUANTITIES OR DISTRIBUTION OF QUANTITIES OF WORK WHICH WILL BE REQUIRED.

CONNECTICUT
STATE HIGHWAY DEPARTMENT

TOWN OF WETHERSFIELD
INTERSTATE ROUTE 91
OVER
FRONTAGE ROAD CONNECTOR
ELECTRICAL DETAILS

REVISIONS		
NO.	DATE	DESCRIPTION

DESIGNED BY LEONARD S. WEGMAN CO., CONTRACTING ENGINEER

SCALES As Shown

MADE BY NP DATE 1-16-61

CHECKED BY LK DATE 1-16-61

APPROVED Hubert Krandlebe DATE 1-16-61

PROJECT NO. 159-91

BRIDGE SHEET NO. 12 OF 12

159 91

M 261 01

53

TRIANGLE LITHO PRINT CO., INC.

F.HW.A. REGION NO.	STATE	TOWN	FED. AID PROJ. NO.	PROJ. NO.	YEAR	ROUTE NO.	SHEET NO.	TOTAL SHEETS
1	CONN.	HARTFORD-WETHERSFIELD	IR-91-3(149)37	63-458	1992	I-91	215	336

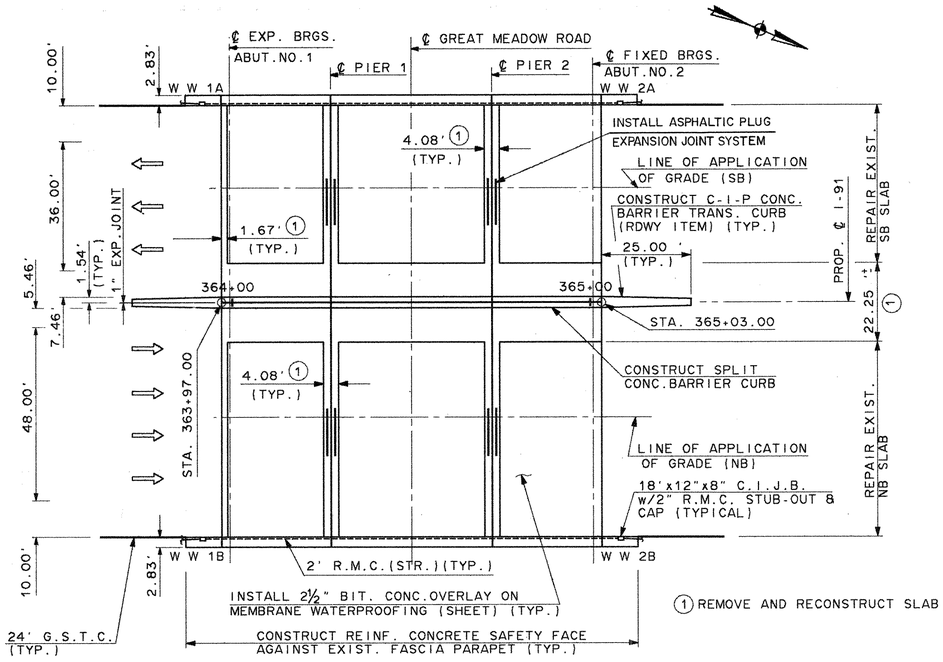

PLAN

SCALE: 1"=20'

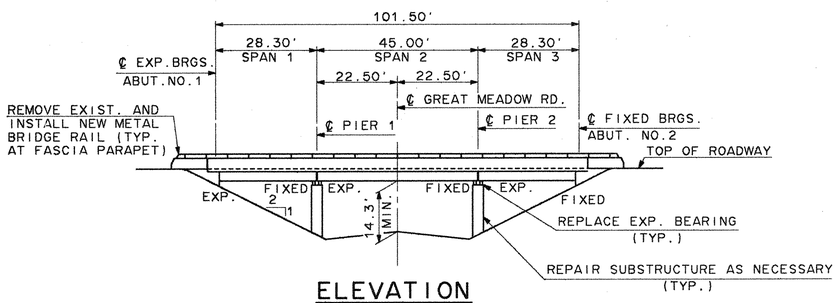

ELEVATION

SCALE: 1"=20'

NOTE: Wherever the Item," Elastomeric Strip Overlay Expansion Joint" Appears on the Plans,It Shall be Construed to Mean" Asphaltic Plug Expansion Joint System".

ESTIMATED QUANTITIES

BRIDGE PAY ITEM	UNIT	QUANTITY
SAW CUT CONCRETE	LF	940
REMOVAL OF BITUMINOUS WEARING SURFACE	SY	1275
STRUCTURE EXCAVATION-EARTH (COMPLETE)	CY	15
BITUMINOUS CONCRETE-CLASS 1	TON	120
BITUMINOUS CONCRETE-CLASS 12	TON	80
SAWING AND SEALING JOINTS	LF	234
CLEAN AND RESEAL EXISTING FILLED BRIDGE JOINTS	LF	120
REMOVAL OF CONCRETE SUPERSTRUCTURE	CY	116
JACKING EXISTING SUPERSTRUCTURE (SITE #3)	LS	LS
DISCONNECT AND RECONNECT EXISTING DIAPHRAGMS	EA	20
SHEAR CONNECTORS	EA	462
POLYVINYL CHLORIDE PLASTIC PIPE WEEPHOLES	EA	8
1½" POLYVINYL CHLORIDE PLASTIC PIPE	LF	32
BEARING REPLACEMENT WITH ELASTOMERIC BEARING PADS	EA	51
REPAIR DAMAGED BEAM	LS	LS
CLASS "S" CONCRETE	CY	1
PARTIAL DEPTH PATCH	CY	11
FULL DEPTH PATCH	CY	2
CLASS "F" CONCRETE	CY	146
COPOLYMER CEMENTITIOUS MORTAR PATCH	GAL	78
1" PREFORMED EXPANSION JOINT FILLER FOR BRIDGES	SF	12
ASPHALTIC PLUG EXPANSION JOINT SYSTEM	LF	234
1" CLOSED CELL ELASTOMER	CI	22400
EPOXY INJECTION CRACK REPAIR	LF	75
DEFORMED STEEL BARS	LB	262
DEFORMED STEEL BARS-EPOXY COATED	LB	32200
DRILLING AND GROUTING REINFORCING BARS	LF	204
SPECIAL PREPARATION TREATMENT AND CONTAINMENT AND COLLECTION OF SURFACE PREPARATION DEBRIS	SF	759
DISPOSAL OF DEBRIS (HAZARDOUS)	BBL	5
DISPOSAL OF DEBRIS (CONTAMINATED)	CY	2
TEMPORARY PRECAST CONCRETE BARRIER CURB (STRUCTURE)	LF	200
RELOCATED TEMPORARY PRECAST CONCRETE BARRIER CURB (STRUCTURE)	LF	600
CONCRETE CYLINDER CURING BOX	EA	1
MEMBRANE WATERPROOFING (SHEET)	SY	1434
PERVIOUS STRUCTURE BACKFILL	CY	19
5¾"x12½" SLOPED GRANITE STONE CURBING FOR BRIDGES	LF	212
PENETRATING SEALER PROTECTIVE COMPOUND	SF	5086
METAL BRIDGE RAIL (TRAFFIC)(EXTRUDED POST ALUMINUM)	LF	252
REMOVAL OF EXISTING MASONRY	CY	5
2" RIGID METAL CONDUIT (IN STRUCTURE)	LF	270
18"x12"x8" CAST IRON JUNCTION BOX	EA	4
SPOT PAINTING OF STRUCTURE	SF	759
TEMPORARY SLAB SUPPORT	LS	LS

NOTICE TO BRIDGE INSPECTORS

The Department's Bridge Safety Procedures require This Bridge to be Inspected for, but not limited to, all Appropriate Components indicated in the Governing Manuals for Bridge Inspection. Attention must be Given to Inspecting the Following Special Components and Details. (The Listing of Components for Specific Attention Shall not be Construed to Reduce the Importance of Inspection of any other Component of the Structure.) The Frequency of Inspection of this Structure shall be in Accordance with the Governing Manuals for Bridge Inspection unless otherwise Directed by the Engineer of Bridges and Structures.

COMPONENT OR DETAIL	BRIDGE SHEET REFERENCE

GENERAL NOTES:

SPECIFICATIONS: Connecticut Department of Transportation Form 814 (1988), up to and including Supplemental Specifications dated July 1992, and Special Provisions.
DESIGN SPECIFICATIONS: Standard Specifications for Highway Bridges (AASHTO-1989), with the Interim Specifications up to and including 1991 as supplemented by the CONNDOT Bridge Design Manual(1985), with revisions up to and including January 1, 1991.
ALLOWABLE DESIGN STRESSES:
Class "F" Concrete — Based on f'c= 4,000 psi
Class "S" Concrete — Based on f'c= 3,000 psi
Reinforcement (ASTM A615 Grade 60) — fs=24,000 psi
LIVE LOAD: H20-44 All. 24,000# dual axles at 4'-0" o.c.
FUTURE PAVING ALLOWANCE: None.
REMAIN-IN-PLACE FORMS: The use of remain-in-place forms on this structure is not allowed.
COMPOSITE CONSTRUCTION: No temporary intermediate supports shall be used prior to and during the placing and setting of the concrete deck slab. Live and superimposed dead loads will be permitted when directed by the Engineer but not less than 10 days after the deck slab has been placed.
CLASS "F" CONCRETE: Class "F" Concrete shall be used for bridge slabs, headers, parapets and keeper blocks.
CLASS "S" CONCRETE: Class "S" Concrete shall be used to fill and repair voids in surfaces of vertical concrete areas greater than four (4) square feet and one inch (1") deep or in horizontal concrete surfaces requiring formwork.
JOINT SEAL: See Special Provisions.
PARAFFIN: The cost of furnishing and applying paraffin is included in the item "Class "F" Concrete".
EXPOSED EDGES: Exposed edges of concrete shall be beveled 1"x1" unless dimensioned otherwise.
STRUCTURAL STEEL: Structural Steel shall conform to ASTM A709 Grade 50W unless otherwise noted.
REINFORCEMENT: All reinforcement shall be ASTM A615 grade 60.
EPOXY COATED REINFORCING BARS: All reinforcement in the parapets and split median barrier shall be epoxy coated unless otherwise noted. These bars shall be included in the pay item "Deformed Steel Bars (Epoxy Coated)".
PAINT: Paint shall conform to the requirements of the special provision "Spot Painting of Structure". The color of the topcoat material on the structural steel shall conform to Federal Standard Color No. 595a, 17178 (Aluminum).
BITUMINOUS CONCRETE OVERLAY: This shall consist of two lifts. The first shall be Bituminous Concrete-Class 12 (1" thick) and the second shall be Bituminous Concrete-Class 1 (1 1/2" thick).
CONSTRUCTION JOINTS: Construction joints, other than those shown on the plans, will not be permitted without the prior approval of the Engineer.
DECIMAL DIMENSIONS: When dimensions are given to less than three decimals places, the omitted digits shall be assumed to be zeros.
EXISTING DIMENSIONS: Dimensions of the existing structure shown on these plans are for general reference only. They have been taken from the original design drawings and are not guaranteed. The Contractor shall take all field measurements necessary to assure proper fit of the finished work and shall assume full responsibility for their accuracy. When shop drawings based on field measurements are submitted for approval, the field measurements shall also be submitted for reference by the Reviewer.
DECK SURVEY: The actual location and extent of "Partial Depth Patch" and "Full Depth Patch" will be determined by a survey conducted by the Engineer during construction.
PENETRATING SEALER PROTECTIVE COMPOUND: This shall be applied uniformly to the following areas: inside face, top and ends of parapets, inside face and top of split concrete barrier curb, exposed tops of backwalls and headers, tops of abutments, bridge seats and piers, top and sides of concrete bearing pads, and vertical faces of piers and abutments from the bridge seat to one foot (1') below the bridge seat.

NOTE: STRUCTURE NO. 63-458-15 IS SITE NO. 3.

CONCRETE DISTRIBUTION

DESCRIPTION	UNIT	QUANTITY
Substructure	CY	7
Superstructure	CY	139
TOTAL	CY	146

INSPECTION OF FIELD WELDS

METHOD	UNIT	QUANTITY
Ultrasonic	Inch	0
Magnetic Particle	LF	0

THE INFORMATION, INCLUDING ESTIMATED QUANTITIES OF WORK SHOWN ON THESE SHEETS IS BASED ON LIMITED INVESTIGATIONS BY THE STATE AND IS IN NO WAY WARRANTED TO INDICATE THE TRUE CONDITIONS OR ACTUAL QUANTITIES OR DISTRIBUTION OF QUANTITIES OF WORK WHICH WILL BE REQUIRED.

NO.	DATE	DESCRIPTION

F.HW.A. REGION NO.	STATE	TOWN	FED. AID PROJ. NO.	PROJ. NO.	YEAR	ROUTE NO.	SHEET NO.	TOTAL SHEETS
1	CONN.	HARTFORD-WETHERSFIELD	IR-91-3(149)37	63-458	1992	I-91	216	336

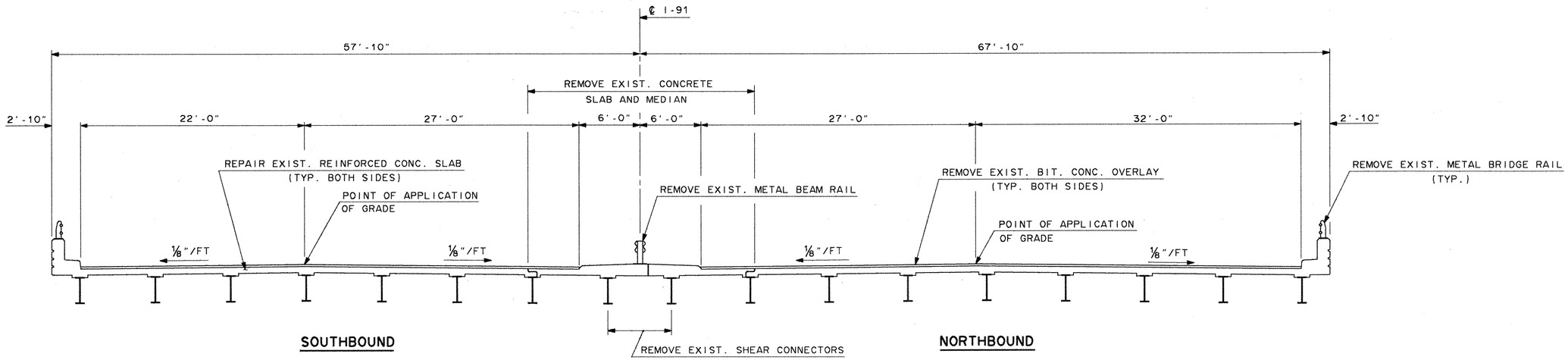

EXISTING BRIDGE CROSS SECTION

SCALE: 3/16" = 1'-0"

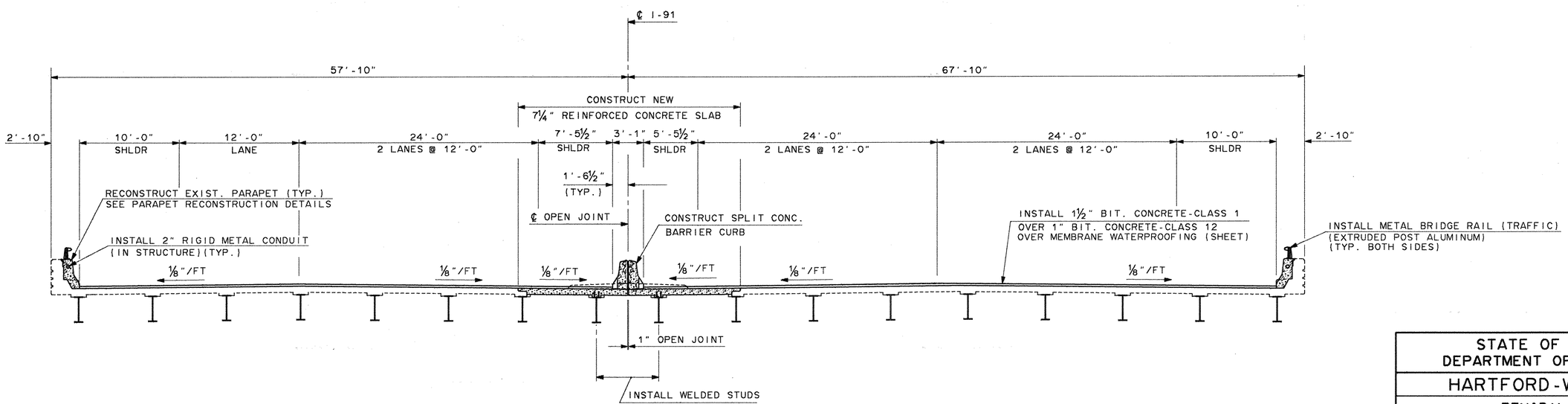

PROPOSED BRIDGE CROSS SECTION

SCALE: 3/16" = 1'-0"

NO.	DATE	DESCRIPTION

REVISIONS

STATE OF CONNECTICUT
DEPARTMENT OF TRANSPORTATION

HARTFORD-WETHERSFIELD

REHABILITATION OF
INTERSTATE ROUTE 91
OVER
GREAT MEADOW ROAD

TYPICAL SECTIONS

ENGINEER STEINMAN BOYNTON GRONQUIST & BIRDSALL, INC.

DESIGNER CPL | DRAFTER GDD | CHECKER

APPROVED Ave T. Ow | DATE 9-11-92

STRUCTURE NO. 63-458-15 | BRIDGE LOG NO. 01459 | STRUCTURE SHEET NO. 2 OF 19

840280/14595ECT/9-8-92/CT

F.-HW.A. REGION NO.	STATE	TOWN	FED. AID PROJ. NO.	PROJ. NO.	YEAR	ROUTE NO.	SHEET NO.	TOTAL SHEETS
1	CONN.	HARTFORD-WETHERSFIELD	IR-91-3(149)37	63-458	1992	I-91	217	336

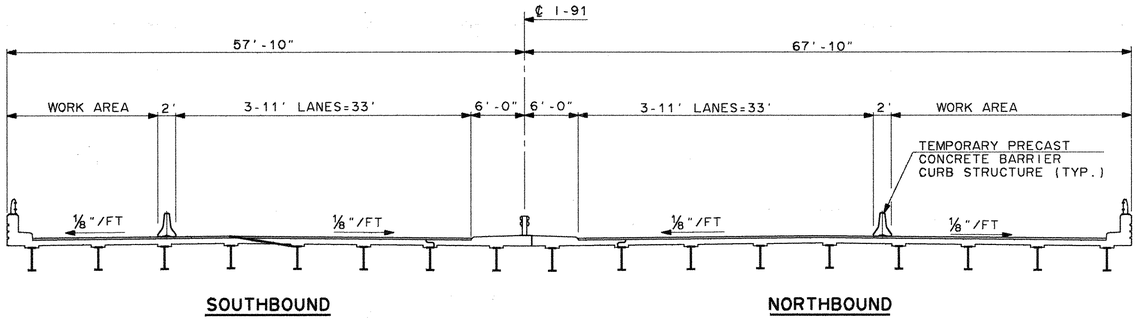

STAGE I

SCALE: ⅛"=1'-0"

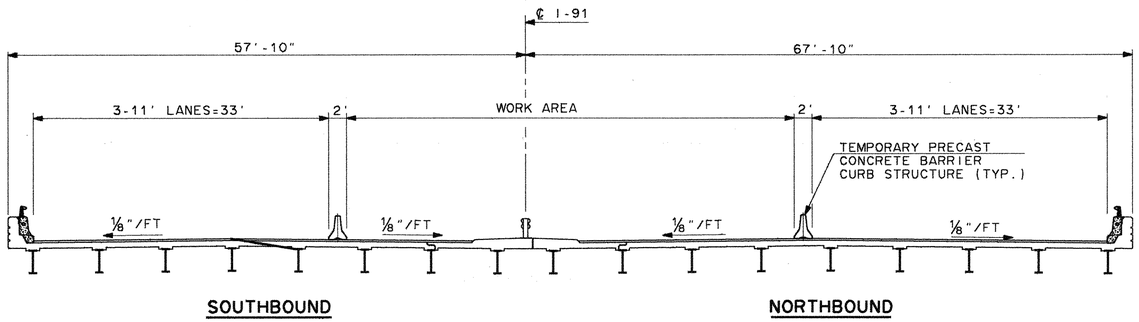

STAGE II

SCALE: ⅛"=1'-0"

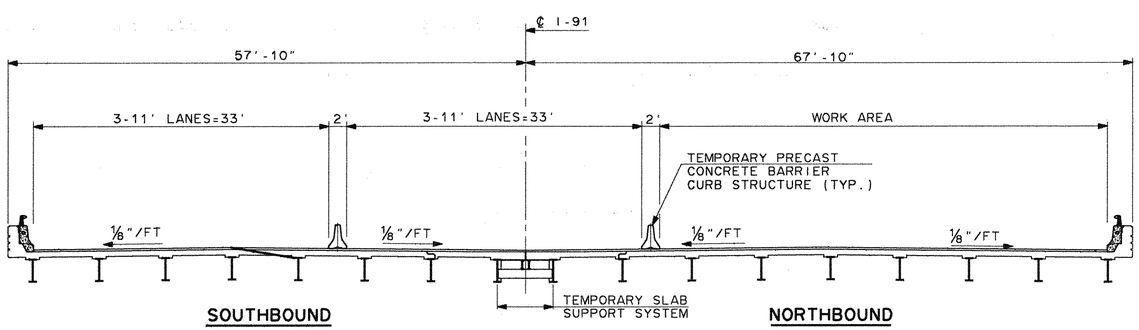

STAGE III

SCALE: ⅛"=1'-0"

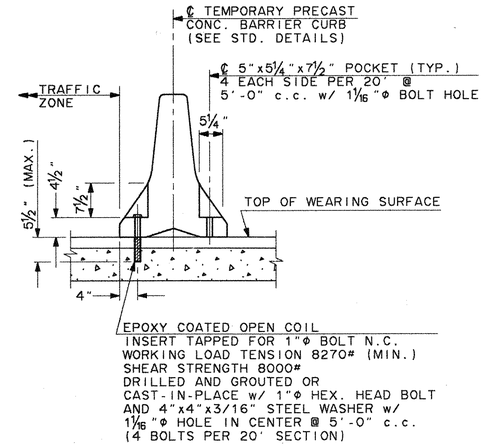

NOTES:

1. AFTER TEMPORARY BARRIER IS REMOVED FROM AND/OR RELOCATED ON THE BRIDGE, REMAINING HOLES IN CONCRETE SLAB SHALL BE FILLED WITH NON-SHRINK EPOXY GROUT. THE WEARING SURFACE SHALL BE PATCHED AS REQUIRED.
2. THE COST OF ALL MATERIALS AND LABOR NECESSARY TO MODIFY AND ANCHOR TEMPORARY PRECAST CONCRETE BARRIER CURB SHALL BE INCLUDED IN THE CONTRACT UNIT PRICE PER LINEAR FOOT FOR "TEMPORARY PRECAST CONCRETE BARRIER CURB (STRUCTURE)".

TEMPORARY PRECAST CONCRETE BARRIER CURB (STRUCTURE)

SCALE: ¾"=1'-0"

STAGE I

1. INSTALL PRECAST CONCRETE BARRIER CURB FOR TEMPORARY TRAFFIC CONTROL.
2. DIRECT TRAFFIC TO DESIGNATED LANES.
3. REMOVE EXISTING BRIDGE RAILING.
4. CONSTRUCT REINFORCED CONCRETE SAFETY FACE AGAINST FRONT FACE OF EXISTING PARAPETS, INSTALL NEW BRIDGE RAILING.

STAGE II

1. RELOCATE PRECAST CONCRETE BARRIER CURB FOR TEMPORARY TRAFFIC CONTROL.
2. DIRECT TRAFFIC TO DESIGNATED LANES.
3. REMOVE EXISTING CONCRETE MEDIAN AND CONCRETE SLAB AT MEDIAN.
4. CONSTRUCT NEW CONCRETE SLAB AT MEDIAN.
5. CONSTRUCT NEW END OF CONCRETE SLAB AND BACKWALL.
6. INSTALL NEW MEMBRANE WATERPROOFING (SHEET) AND PLACE BITUMINOUS CONCRETE OVERLAY AS NEEDED FOR SMOOTH RIDE.

STAGE III

1. RELOCATE PRECAST CONCRETE BARRIER CURB FOR TEMPORARY TRAFFIC CONTROL.
2. DIRECT TRAFFIC TO DESIGNATED LANES.
3. REMOVE EXISTING BITUMINOUS CONCRETE OVERLAY AND MEMBRANE WATERPROOFING (SHEET).
4. JACK BEAMS AND REPLACE BEARINGS.
5. CONSTRUCT NEW END OF CONCRETE SLAB AND BACKWALL.
6. REPAIR CONCRETE DECK.
7. INSTALL NEW MEMBRANE WATERPROOFING (SHEET) AND PLACE BITUMINOUS CONCRETE OVERLAY.
8. INSTALL NEW JOINTS.

NO.	DATE	DESCRIPTION

REVISIONS

STATE OF CONNECTICUT
DEPARTMENT OF TRANSPORTATION

HARTFORD-WETHERSFIELD

REHABILITATION OF
INTERSTATE ROUTE 91
OVER
GREAT MEADOW ROAD

STAGE CONSTRUCTION

ENGINEER STEINMAN BOYNTON GRONQUIST & BIRDSALL, INC.

DESIGNER ATO | DRAFTER GDD | CHECKER

APPROVED Gus T. Ota | DATE 9-11-92

STRUCTURE NO. 63-458-15 | BRIDGE LOG NO. 01459 | STRUCTURE SHEET NO. 3 of 19

840280/1459SC/9-8-92/CT

63-458

469-01

217

F.HW.A. REGION NO.	STATE	TOWN	FED. AID PROJ. NO.	PROJ. NO.	YEAR	ROUTE NO.	SHEET NO.	TOTAL SHEETS
1	CONN.	HARTFORD-WETHERSFIELD	IR-91-3(149)37	63-458	1992	I-91	218	336

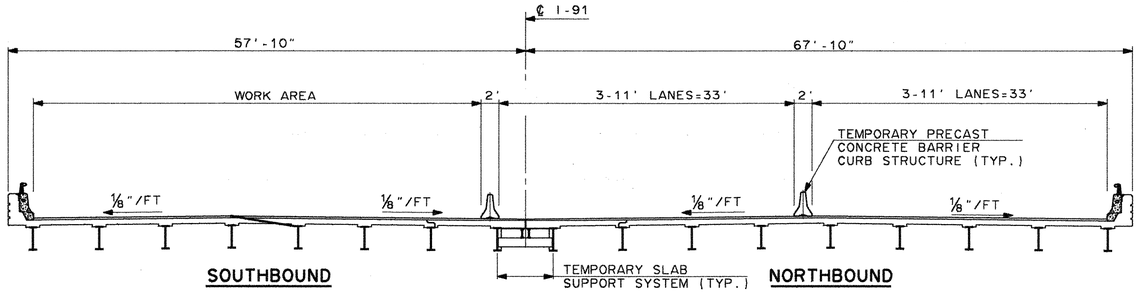

STAGE IV

SCALE: ⅛"=1'-0"

STAGE IV

1. RELOCATE PRECAST CONCRETE BARRIER CURB FOR TEMPORARY TRAFFIC CONTROL.
2. DIRECT TRAFFIC TO DESIGNATED LANES.
3. REMOVE EXISTING BITUMINOUS CONCRETE OVERLAY AND MEMBRANE WATERPROOFING (SHEET).
4. JACK BEAMS AND REPLACE BEARINGS.
5. CONSTRUCT NEW END OF CONCRETE SLAB AND BACKWALL.
6. REPAIR CONCRETE DECK.
7. INSTALL NEW MEMBRANE WATERPROOFING (SHEET) AND PLACE BITUMINOUS CONCRETE OVERLAY.
8. INSTALL NEW JOINTS.

STAGE V

1. RELOCATE PRECAST CONCRETE BARRIER CURB FOR TEMPORARY TRAFFIC CONTROL.
2. DIRECT TRAFFIC TO DESIGNATED LANES.
3. REMOVE BITUMINOUS CONCRETE OVERLAY AND MEMBRANE WATERPROOFING (SHEET) WHERE REQUIRED.
4. CONSTRUCT SPLIT CONCRETE BARRIER CURB.
5. INSTALL NEW JOINTS.
6. INSTALL NEW MEMBRANE WATERPROOFING SHEET AND PLACE BITUMINOUS CONCRETE OVERLAY.

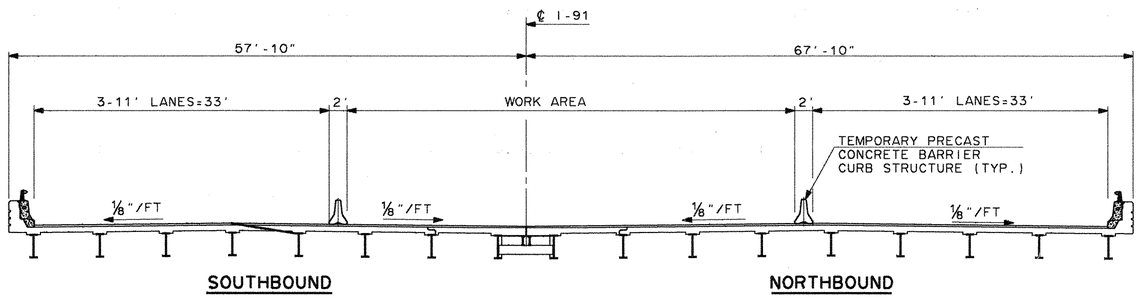

STAGE V

SCALE: ⅛"=1'-0"

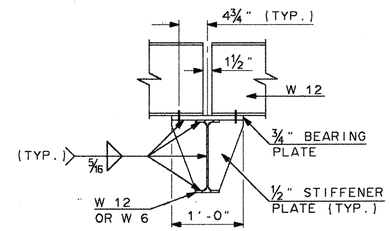

PROPOSED INTERMEDIATE BEAM SEAT DETAILS

SCALE: 1"=1'-0"

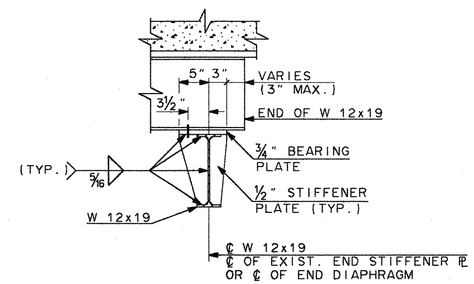

PROPOSED END BEARING DETAIL OVER ABUTMENTS

SCALE: 1"=1'-0"

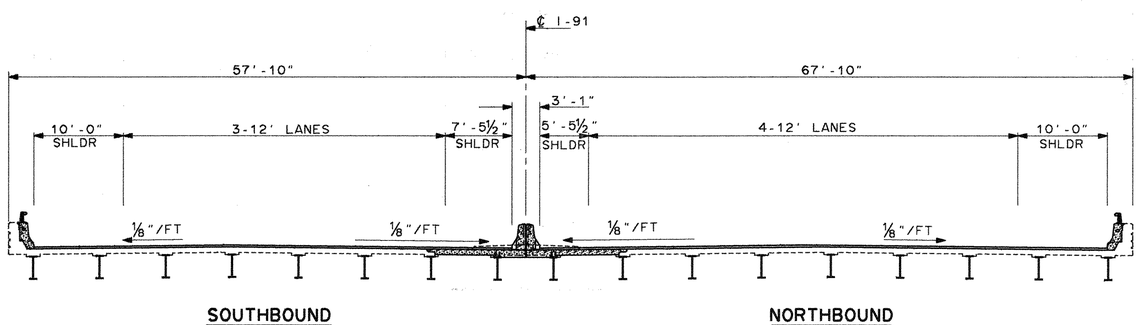

FINAL

SCALE: ⅛"=1'-0"

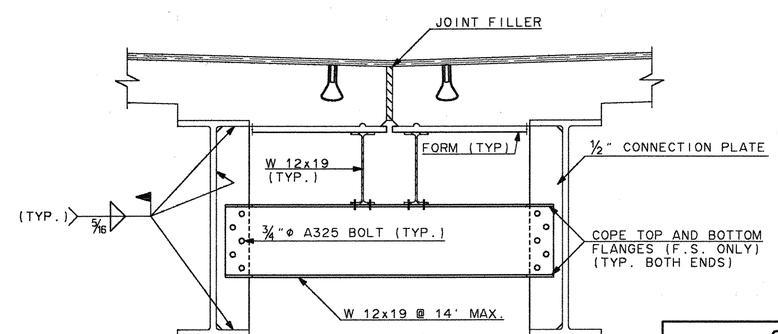

PROPOSED TEMPORARY SUPPORT

SCALE: 1"=1'-0"

NO.	DATE	DESCRIPTION

REVISIONS

STATE OF CONNECTICUT
DEPARTMENT OF TRANSPORTATION

HARTFORD-WETHERSFIELD

REHABILITATION OF
INTERSTATE ROUTE 91
OVER
GREAT MEADOW ROAD

STAGE CONSTRUCTION

ENGINEER STEINMAN BOYNTON GRONQUIST & BIRDSALL, INC.

DESIGNER ATO | DRAFTER GDD | CHECKER

APPROVED Arno T. Ota | DATE 9-11-92

STRUCTURE NO. 63-458-15 | BRIDGE LOG NO. 01459 | STRUCTURE SHEET NO. 4 of 19

840280/14595C1/9-8-92/CT

F.HW.A. REGION NO.	STATE	TOWN	FED. AID PROJ. NO.	PROJ. NO.	YEAR	ROUTE NO.	SHEET NO.	TOTAL SHEETS
1	CONN.	HARTFORD-WETHERSFIELD	IR-91-3(149)37	63-458	1992	I-91	219	336

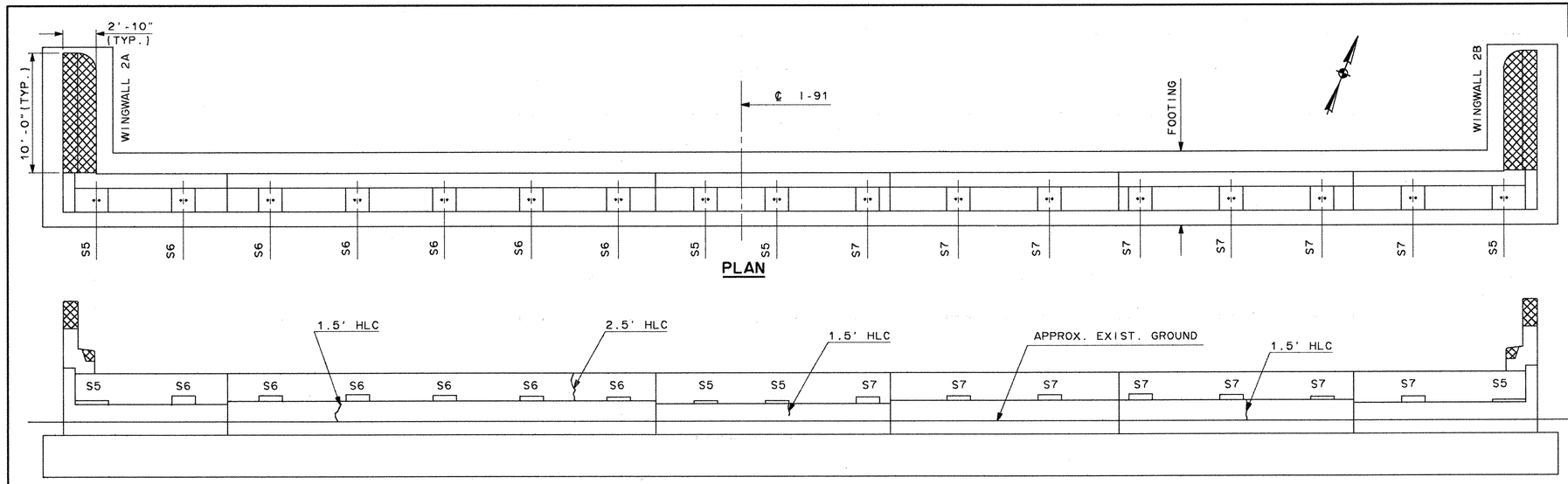

PLAN

ELEVATION

ABUTMENT NO. 2

SCALE: 3/16" = 1'-0"

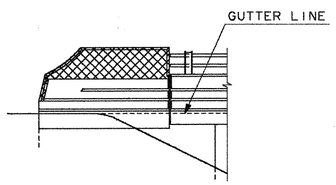

TYPICAL WINGWALL ELEVATION

SCALE: 3/16" = 1'-0"

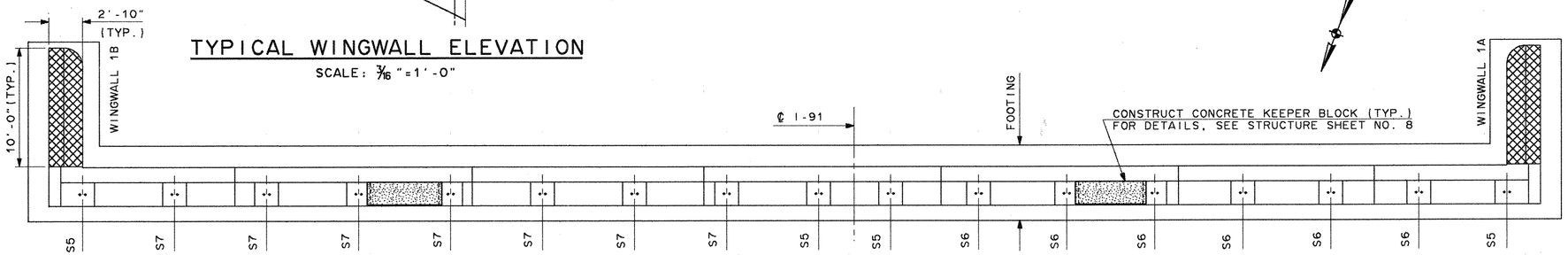

PLAN

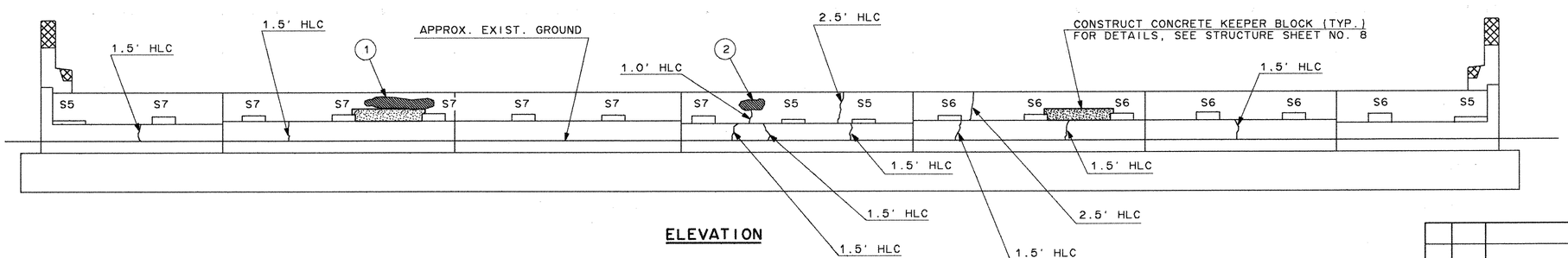

ELEVATION

ABUTMENT NO. 1

SCALE: 3/16" = 1'-0"

NOTES:

1. ALL DIMENSIONS AND LOCATIONS OF DETERIORATED CONCRETE AREAS ARE APPROXIMATE. THE ACTUAL AMOUNTS AND REPAIR METHODS SHALL BE DETERMINED BY THE ENGINEER IN THE FIELD.
2. THE METHOD OF REPAIR OF HOLLOW AREAS SHALL BE DETERMINED BY THE ENGINEER AFTER THE DETERIORATED CONCRETE HAS BEEN REMOVED.
3. FOR RECOMMENDED REPAIR METHOD CLASSIFICATION, SEE SUBSTRUCTURE REPAIR DETAILS THIS SHEET.

LEGEND

- SPALL AREA
- H HOLLOW AREA
- HLC HAIR LINE CRACK
- LIMIT OF WINGWALL PARAPET REMOVAL

SPALL REPAIRS

NO.	APPROX. SIZE	*
1	6' x 1.5' x 1/2"	C
2	2' x 1' x 1"	D

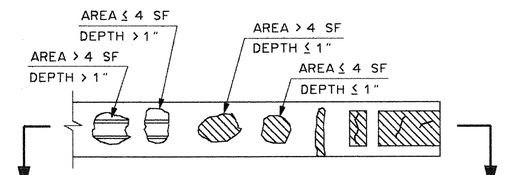

TYPICAL ELEVATION

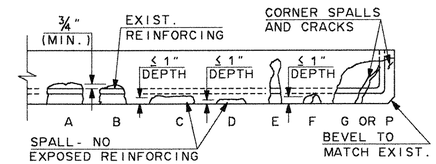

SECTION A-A

*RECOMMENDED REPAIR METHODS:

A = CLASS "S" CONCRETE
B = COPOLYMER CEMENTITIOUS MORTAR PATCH
C = CLASS "S" CONCRETE
D = COPOLYMER CEMENTITIOUS MORTAR PATCH
E = EPOXY INJECTION CRACK REPAIR
F = COPOLYMER CEMENTITIOUS MORTAR PATCH
G = CLASS "S" CONCRETE
P = COPOLYMER CEMENTITIOUS MORTAR PATCH

SUBSTRUCTURE REPAIR DETAILS

NOT TO SCALE

STATE OF CONNECTICUT
DEPARTMENT OF TRANSPORTATION

HARTFORD-WETHERSFIELD

REHABILITATION OF
INTERSTATE ROUTE 91
OVER
GREAT MEADOW ROAD

ABUTMENT REPAIRS

NO.	DATE	DESCRIPTION

REVISIONS

ENGINEER STEINMAN BOYNTON GRONQUIST & BIRDSALL, INC.		
DESIGNER CPL	DRAFTER GDD	CHECKER CPL
APPROVED Avo T. Dia	DATE 9-11-92	
STRUCTURE NO. 63-458-15	BRIDGE LOG NO. 01459	STRUCTURE SHEET NO. 5 OF 19

840280/1459ABUT/9-8-92/CT

63-458

469-01

219

F.HW.A. REGION NO.	STATE	TOWN	FED. AID PROJ. NO.	PROJ. NO.	YEAR	ROUTE NO.	SHEET NO.	TOTAL SHEETS
1	CONN.	HARTFORD-WETHERSFIELD	IR-91-3(149)37	63-458	1992	I-91	220	336

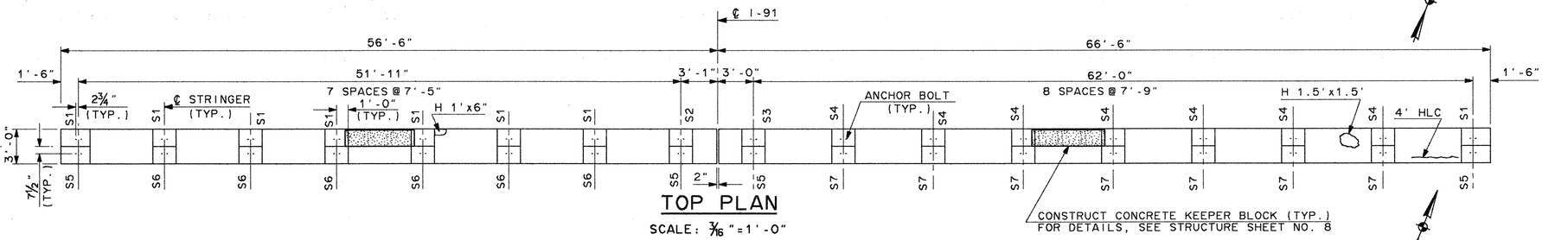

TOP PLAN

SCALE: 3/16"=1'-0"

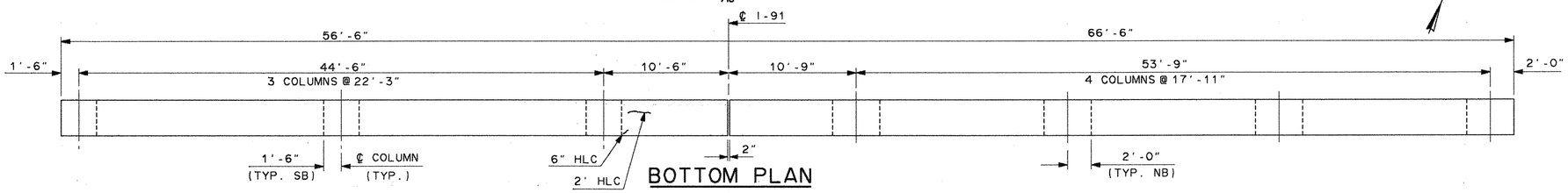

BOTTOM PLAN

SCALE: 3/16"=1'-0"

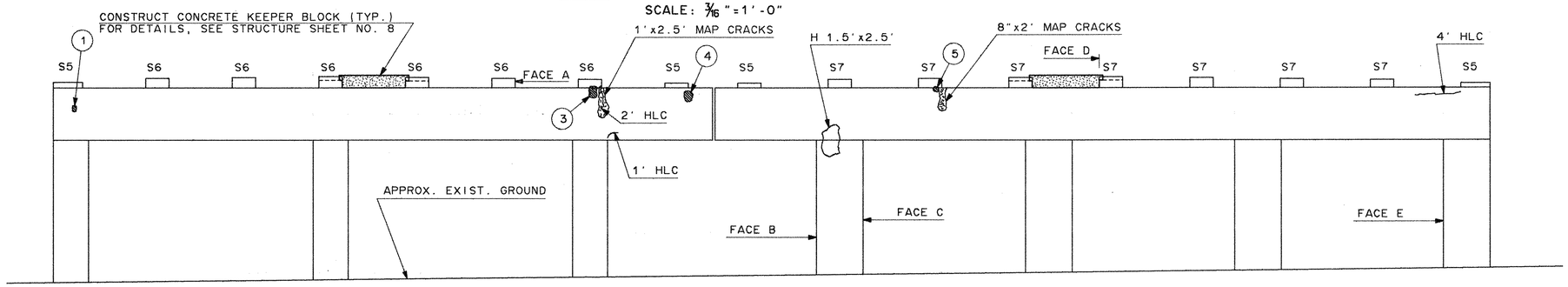

SOUTH ELEVATION

SCALE: 3/16"=1'-0"

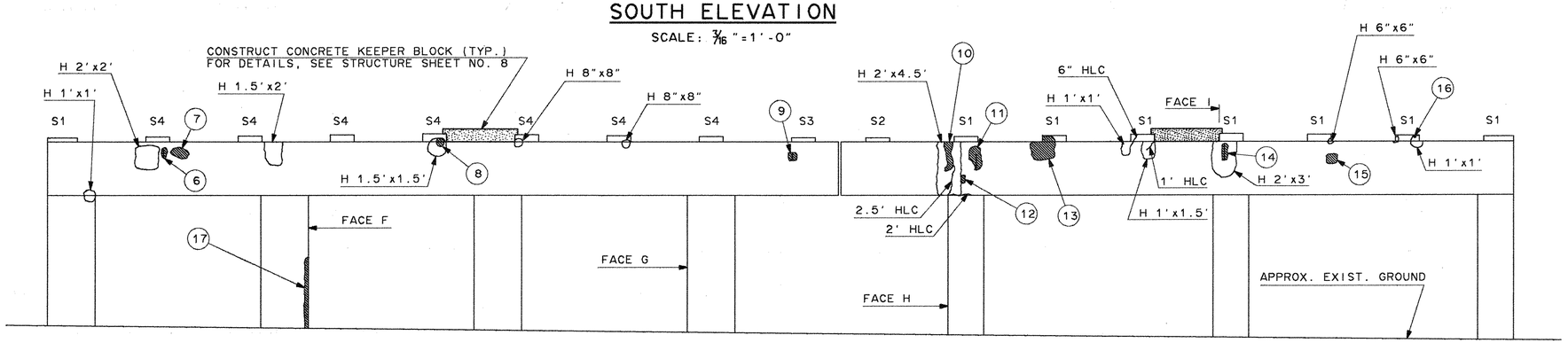

NORTH ELEVATION

SCALE: 3/16"=1'-0"

SPALL REPAIRS

NO.	APPROX. SIZE	*
1	4" x 6" x ½"	D
2	1.5' x 5" x 1"	P
3	8" x 1' x ½"	D
4	8" x 1' x ½"	D
5	6" x 6" x ½"	D
6	4" x 1' x ½"	D
7	1.5' x 1' x ½"	D
8	8" x 8" x ½"	D
9	8" x 8" x ½"	D
10	8" x 2.5' x 2"	B
11	1' x 2' x ½"	D
12	4" x 8" x ¼"	D
13	2' x 2' x ½"	P
14	6" x 1.5' x 1"	D
15	10" x 10" x ½"	D
16	2" x 2" x ¼"	D
17	4" x 6' x 8"	G

* SEE NOTE 3.

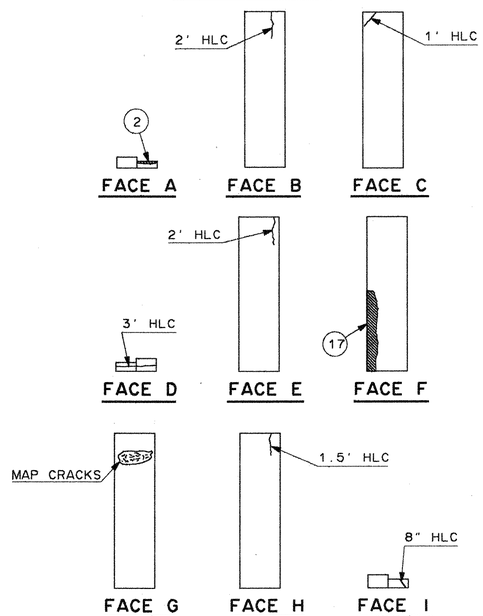

SIDE VIEWS

SCALE: 3/16"=1'-0"

NOTES:

1. ALL DIMENSIONS AND LOCATIONS OF DETERIORATED CONCRETE AREAS ARE APPROXIMATE. THE ACTUAL AMOUNTS AND REPAIR METHODS SHALL BE DETERMINED BY THE ENGINEER IN THE FIELD.
2. THE METHOD OF REPAIR OF HOLLOW AREAS SHALL BE DETERMINED BY THE ENGINEER AFTER THE DETERIORATED CONCRETE HAS BEEN REMOVED.
3. FOR RECOMMENDED REPAIR METHOD CLASSIFICATION, SEE SUBSTRUCTURE REPAIR DETAILS, STRUCTURE SHEET NO. 5.

LEGEND

SPALL AREA
H HOLLOW AREA
HLC HAIR LINE CRACK

NO.	DATE	DESCRIPTION

REVISIONS

STATE OF CONNECTICUT
DEPARTMENT OF TRANSPORTATION

HARTFORD-WETHERSFIELD

REHABILITATION OF
INTERSTATE ROUTE 91
OVER
GREAT MEADOW ROAD

PIER 1 REPAIRS

ENGINEER STEINMAN BOYNTON GRONQUIST & BIRDSALL, INC.

DESIGNER CPL | DRAFTER GDD | CHECKER LM

APPROVED Arno T. Ovra | DATE 9-11-92

STRUCTURE NO. 63-458-15 | BRIDGE LOG NO. 01459 | STRUCTURE SHEET NO. 6 OF 12

840280/1459P1/9-8-92/CT

63-458

469-01

220

F.HW.A. REGION NO.	STATE	TOWN	FED. AID PROJ. NO.	PROJ. NO.	YEAR	ROUTE NO.	SHEET NO.	TOTAL SHEETS
1	CONN.	HARTFORD-WETHERSFIELD	IR-91-3(149)37	63-458	1992	I-91	221	336

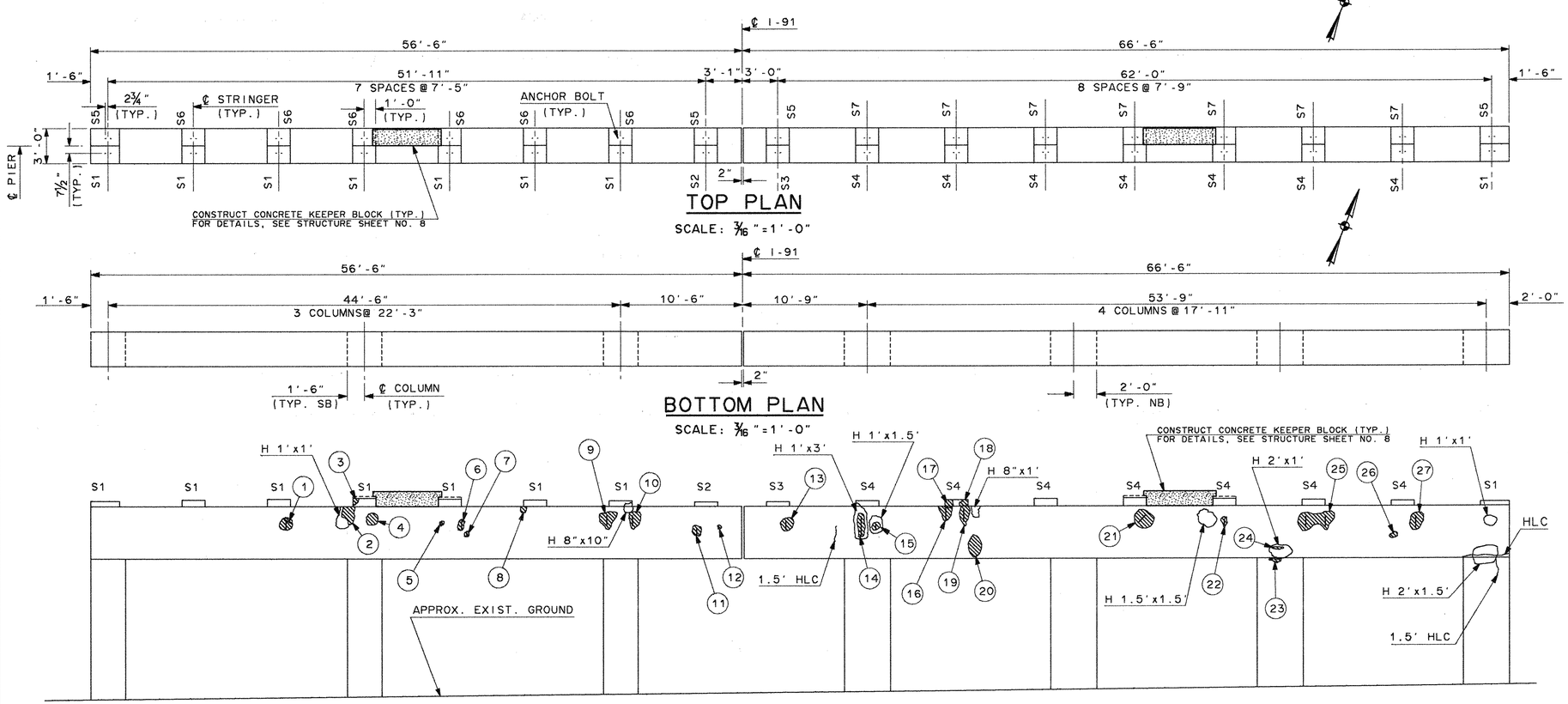

TOP PLAN

SCALE: 3/16" = 1'-0"

BOTTOM PLAN

SCALE: 3/16" = 1'-0"

SOUTH ELEVATION

SCALE: 3/16" = 1'-0"

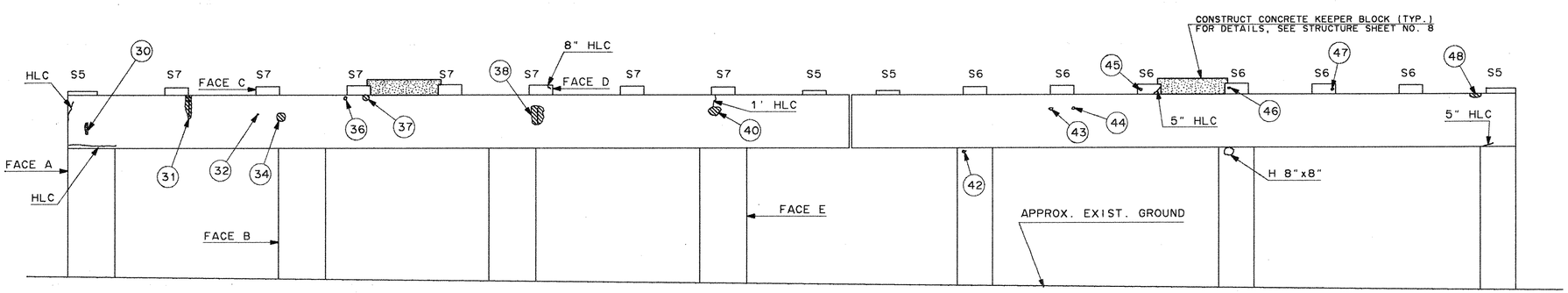

NORTH ELEVATION

SCALE: 3/16" = 1'-0"

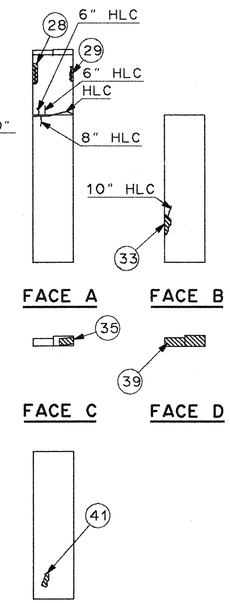

SIDE VIEWS

SCALE: 3/16" = 1'-0"

SPALL REPAIRS

* SEE NOTE 3.

NO.	APPROX. SIZE	*
1	1' x 1' x ½"	D
2	1' x 1.5' x 1"	D
3	6" x 6" x 6"	G
4	1' x 1' x ½"	D
5	4" x 4" x ¼"	D
6	6" x 10" x ½"	D
7	5" x 5" x ½"	D
8	6" x 6" x ¼"	D
9	1.5' x 1.5' x 1"	D
10	1' x 1.5' x 1"	D
11	8" x 10" x ½"	D
12	4" x 4" x ¼"	D
13	1' x 1' x ½"	D
14	8" x 2' x ½"	D
15	8" x 8" x ½"	D
16	1' x 1' x 1"	D
17	8" x 8" x 8"	G
18	8" x 8" x 8"	G
19	8" x 1.5' x 1"	D
20	1' x 2' x 1"	D
21	1.5' x 1.5' x 1"	D
22	6" x 10" x ½"	D
23	10" x 3" x ¼"	D
24	1' x 3" x ¼"	D
25	3' x 1.5' x 1"	C
26	8" x 6" x ¾"	D
27	1' x 1.5' x ½"	D
28	4" x 1.5' x 4"	P
29	2" x 1' x 2"	P
30	3" x 3" x ½"	D
31	6" x 2' x ½"	D
32	1" x 1" x ¼"	D
33	2" x 1.5' x 2"	P
34	8" x 8" x ½"	D
35	1' x 6" x 1"	D
36	3" x 3" x ¼"	D
37	5" x 5" x ¼"	D
38	1' x 1.5' x 2"	B
39	3' x 8" x 1"	G
40	10" x 10" x 1"	D
41	2" x 1" x 1"	D
42	2" x 2" x ¼"	D
43	2" x 2" x ¼"	D
44	2" x 2" x ½"	D
45	2" x 2" x ¼"	D
46	2" x 1" x ¼"	D
47	2" x 2" x ¼"	D
48	4" x 4" x 1"	P

NOTES:

1. ALL DIMENSIONS AND LOCATIONS OF DETERIORATED CONCRETE AREAS ARE APPROXIMATE. THE ACTUAL AMOUNTS AND REPAIR METHODS SHALL BE DETERMINED BY THE ENGINEER IN THE FIELD.
2. THE METHOD OF REPAIR OF HOLLOW AREAS SHALL BE DETERMINED BY THE ENGINEER AFTER THE DETERIORATED CONCRETE HAS BEEN REMOVED.
3. FOR RECOMMENDED REPAIR METHOD CLASSIFICATION, SEE SUBSTRUCTURE REPAIR DETAILS, STRUCTURE SHEET NO. 5.

LEGEND

SPALL AREA
H HOLLOW AREA
HLC HAIR LINE CRACK

NO.	DATE	DESCRIPTION

REVISIONS

STATE OF CONNECTICUT
DEPARTMENT OF TRANSPORTATION

HARTFORD-WETHERSFIELD

REHABILITATION OF
INTERSTATE ROUTE 91
OVER
GREAT MEADOW ROAD

PIER 2 REPAIRS

ENGINEER STEINMAN BOYNTON GRONQUIST & BIRDSALL, INC.

DESIGNER CPL | DRAFTER GDD | CHECKER LM

APPROVED [signature] | DATE 9-11-92

STRUCTURE NO. 63-458-15 | BRIDGE LOG NO. 01459 | STRUCTURE SHEET NO. 7 OF 19

840280/1459P2/9-8-92/CT

63-458 469-01 221

F H W A REGION	STATE	TOWN	FED. AID PROJ. NO.	PROJ. NO.	YEAR	ROUTE NO.	SHEET NO.	TOTAL SHEETS
1	CONN.	HARTFORD-WETHERSFIELD	IR-91-3(149)37	63-458	1994	I-91	221-1	336

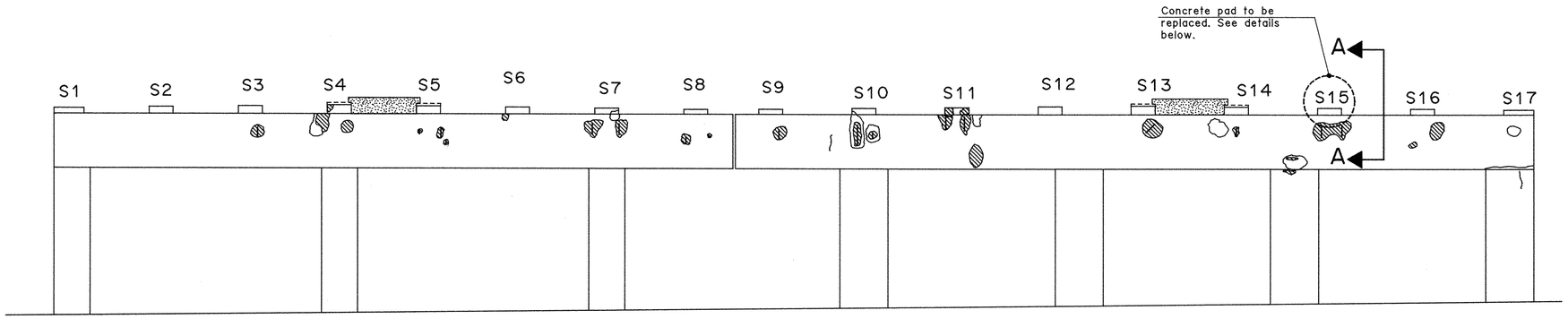

SOUTH ELEVATION - PIER 2

SCALE: 3/16"=1'-0"

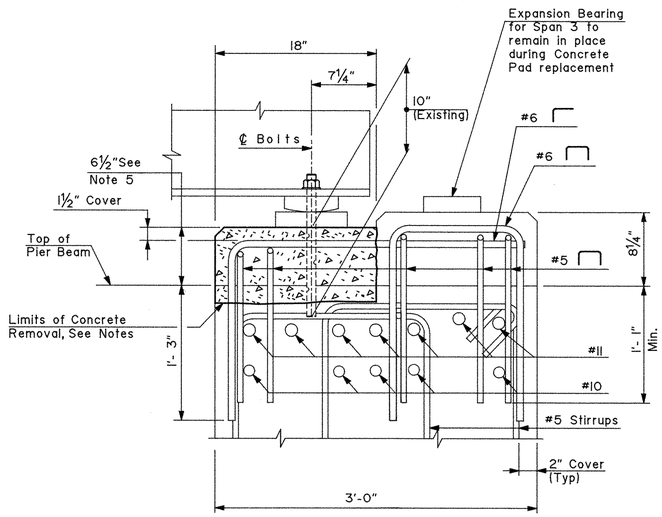

SECTION A-A

SCALE: 1½" =1'-0"

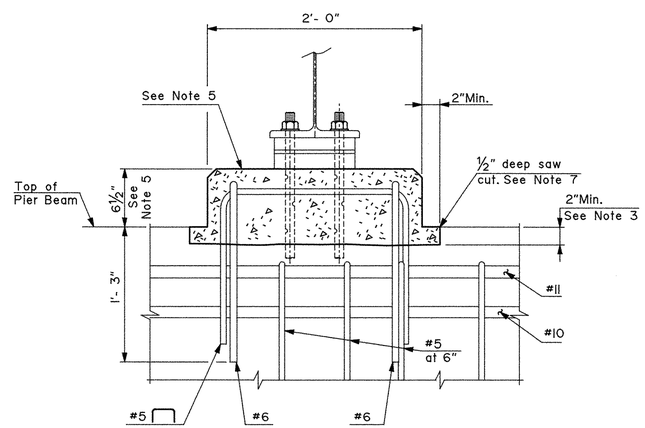

PIER 2 SOUTH ELEVATION

SCALE: 1½" =1'-0"

NOTES:

1. The Contractor shall verify all dimensions and elevations in the field prior to performing any corrective work.
2. The Contractor shall only apply a jacking load sufficient to transfer the stringer end reaction from the bearing to the jack(s). The Contractor shall monitor the jacking load at all times to ensure that the load does not exceed 60 kips per stringer. If the load exceeds 60 kips per stringer before the stringer with bearing assembly at S15 has raised a sufficient amount to remove the concrete bearing pad, the Contractor shall stop the jacking procedure and notify the Engineer.
3. Concrete bearing pad shall be completely removed to at least 2" below the existing pier shelf. Additional removal of the pier concrete may be required as directed by the Engineer until sound concrete is encountered.
4. If the bearing is raised more than 1/16" to allow for removal of the concrete bearing pad, the Contractor must lower the bearing to its original elevation before the new concrete, for the bearing pad, is placed.
5. The Contractor is responsible for verifying the existing concrete bearing pad elevation and establishing the same elevation (± 1/16") with the new pad.
6. Dimensions of anchor bolts and reinforcing steel are from the original constructions plans - actual field dimensions may vary.
7. The Contractor shall make a ½" deep saw cut around the limits of the Concrete to be removed.
8. See Special Provision for "Replacement of Concrete Bearing Pad - Site 3" and other specifications identified therein for additional requirements.

THIS SHEET ADDED 3-7-94

CONNECTICUT
DEPARTMENT OF TRANSPORTATION

HARTFORD-WETHERSFIELD

REHABILITATION OF
INTERSTATE ROUTE 91
OVER
GREAT MEADOW ROAD

PIER 2 CONCRETE PAD REPAIR

NO.	DATE	DESCRIPTION

F.HW.A. REGION NO.	STATE	TOWN	FED. AID PROJ. NO.	PROJ. NO.	YEAR	ROUTE NO.	SHEET NO.	TOTAL SHEETS
1	CONN.	HARTFORD-WETHERSFIELD	IR-91-3 (149) 37	63 - 458	1992	I - 91	222	336

NOTES:

1. ALL NEW REINFORCING STEEL IN KEEPER BLOCKS SHALL NOT BE EPOXY COATED.
2. THE COST OF PROVIDING AND FABRICATING STEEL ANGLES AND STUDS SHALL BE INCLUDED IN THE CONTRACT UNIT PRICE FOR "CLASS 'F' CONCRETE".

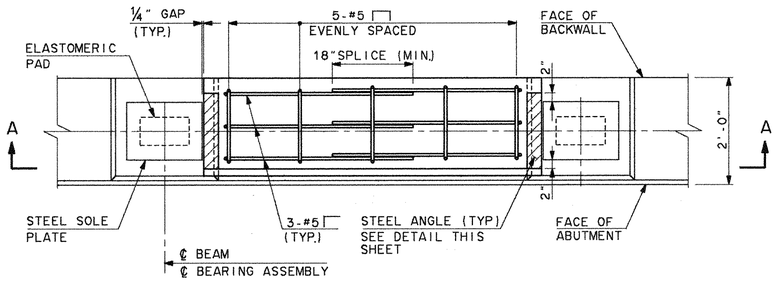

PLAN

ABUTMENT

SCALE: ¾"= 1'-0"

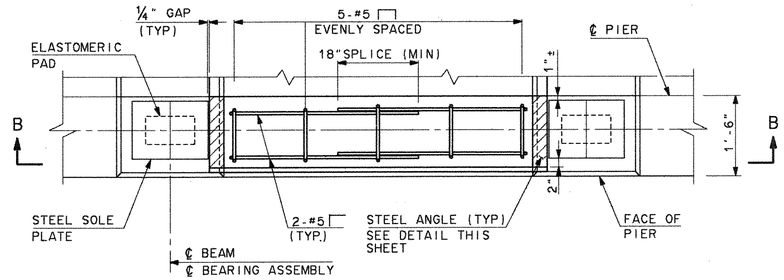

PLAN

PIERS

SCALE: ¾"= 1'-0"

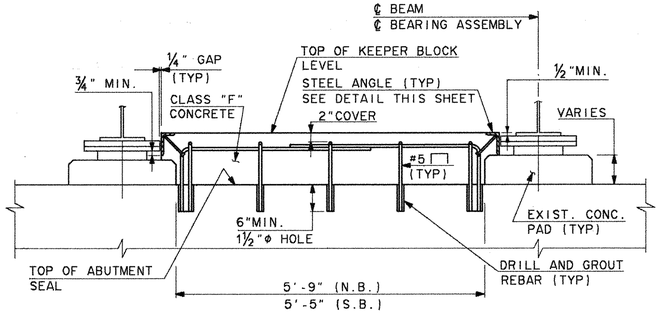

SECTION A-A

SCALE: ¾"= 1'-0"

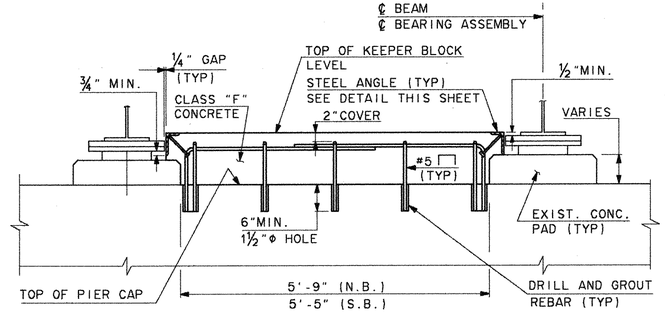

SECTION B-B

SCALE: ¾"= 1'-0"

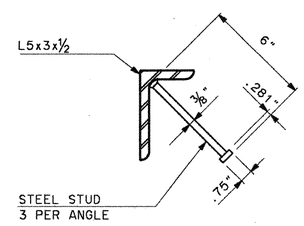

DETAIL

WELDED STUD CONCRETE ANCHOR DETAIL

SCALE: 3"= 1'-0"

NO.	DATE	DESCRIPTION

REVISIONS

STATE OF CONNECTICUT
DEPARTMENT OF TRANSPORTATION

HARTFORD-WETHERSFIELD

REHABILITATION OF
INTERSTATE ROUTE 91
OVER
GREAT MEADOW ROAD

KEEPER BLOCK DETAILS

ENGINEER STEINMAN BOYNTON GRONQUIST & BIRDSALL, INC.

DESIGNER DPW | DRAFTER DPW | CHECKER CPL

APPROVED Ava T. Ova | DATE 9-11-92

STRUCTURE NO. 63-458-15 | BRIDGE LOG NO. 01459 | STRUCTURE SHEET NO. 8 OF 19

6H0280/1459KEEP/9-8-92/CT

63-458

469-01

F.HW.A. REGION NO.	STATE	TOWN	FED. AID PROJ. NO.	PROJ. NO.	YEAR	ROUTE NO.	SHEET NO.	TOTAL SHEETS
1	CONN.	HARTFORD-WETHERSFIELD	IR-91-3(149)137	63-458	1992	I-91	223	336

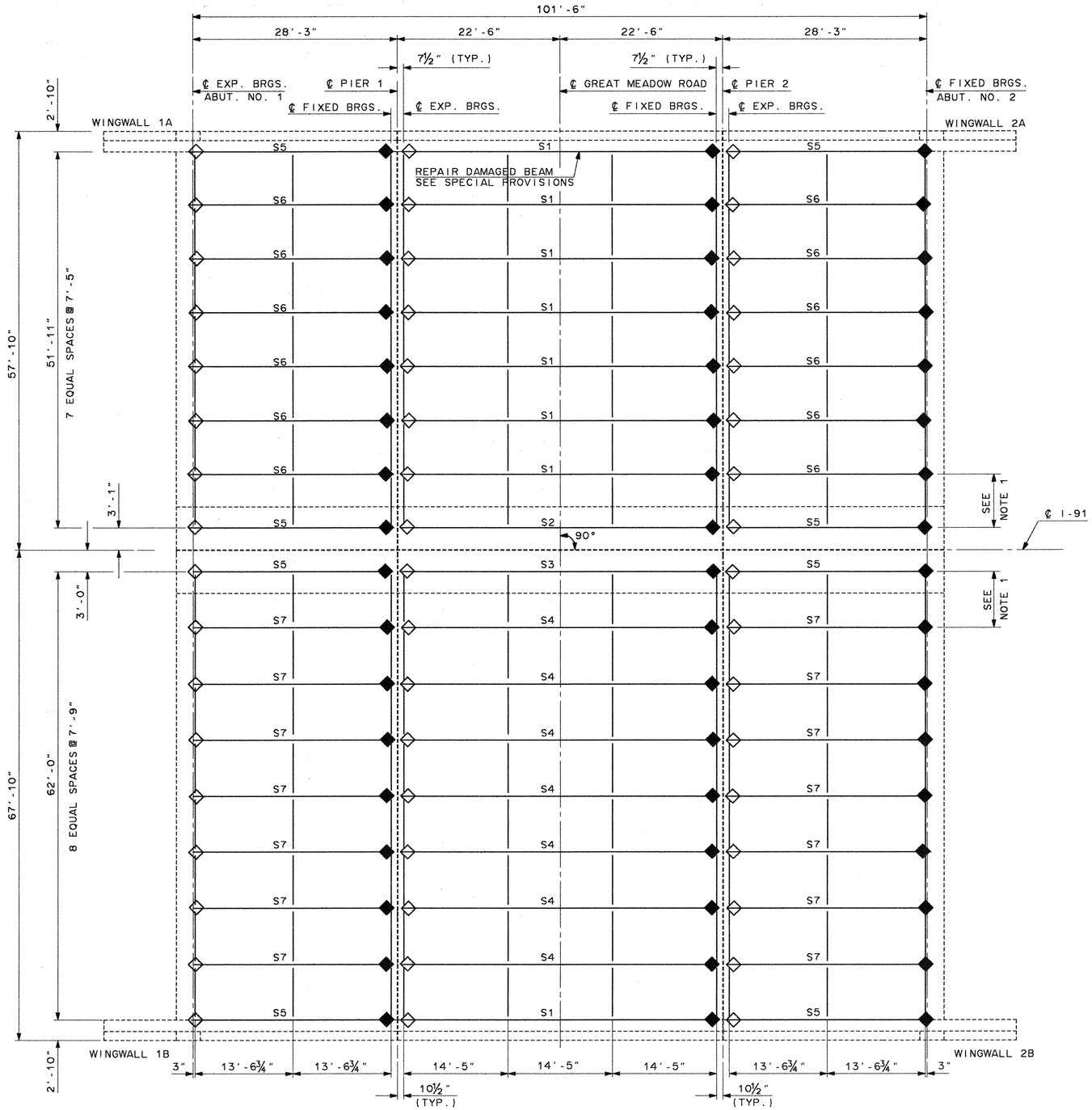

FRAMING PLAN

SCALE: ⅛" = 1'-0"

FRAMING NOTES:

1. DISCONNECT DIAPHRAGMS AT THESE LOCATIONS BEFORE REMOVING CONCRETE DECK. RECONNECT DIAPHRAGMS AFTER NEW DECK AND MEDIAN BARRIER HAVE BEEN CAST. FOR DETAILS, SEE STRUCTURE SHEET NO. 14.
2. FOR SHEAR STUD SPACING, SEE STRUCTURE SHEET NO. 12.

ESTIMATED STRINGER END REACTIONS (KIPS)

	SPAN	STRINGER	DL	LL	I	TOTAL
NB	1 & 3	S7	19	25	8	52
	2	S4	31	30	9	70
SB	1 & 3	S6	19	29	9	57
	2	S1	30	34	10	74

LEGEND

◆ STEEL BEARING TO REMAIN-IN-PLACE

◇ BRONZE PLATE EXPANSION BEARING TO BE REPLACED WITH ELASTOMERIC BEARING PAD

NO.	DATE	DESCRIPTION

REVISIONS

STATE OF CONNECTICUT
DEPARTMENT OF TRANSPORTATION

HARTFORD-WETHERSFIELD

REHABILITATION OF

INTERSTATE ROUTE 91
OVER
GREAT MEADOW ROAD

FRAMING PLAN

ENGINEER STEINMAN BOYNTON GRONQUIST & BIRDSALL, INC.

DESIGNER CPL | DRAFTER GDD | CHECKER LM

APPROVED Owo T. Ow | DATE 9-11-92

STRUCTURE NO. 63-458-15 | BRIDGE LOG NO. 01459 | STRUCTURE SHEET NO. 9 of 19

840280/1459FRAM/9-8-92/CT

63-458

469-01

223

F.HW.A. REGION NO.	STATE	TOWN	FED. AID PROJ. NO.	PROJ. NO.	YEAR	ROUTE NO.	SHEET NO.	TOTAL SHEETS
1	CONN.	HARTFORD-WETHERSFILED	IR-91-3(149)37	63-458	1992	I-91	224	336

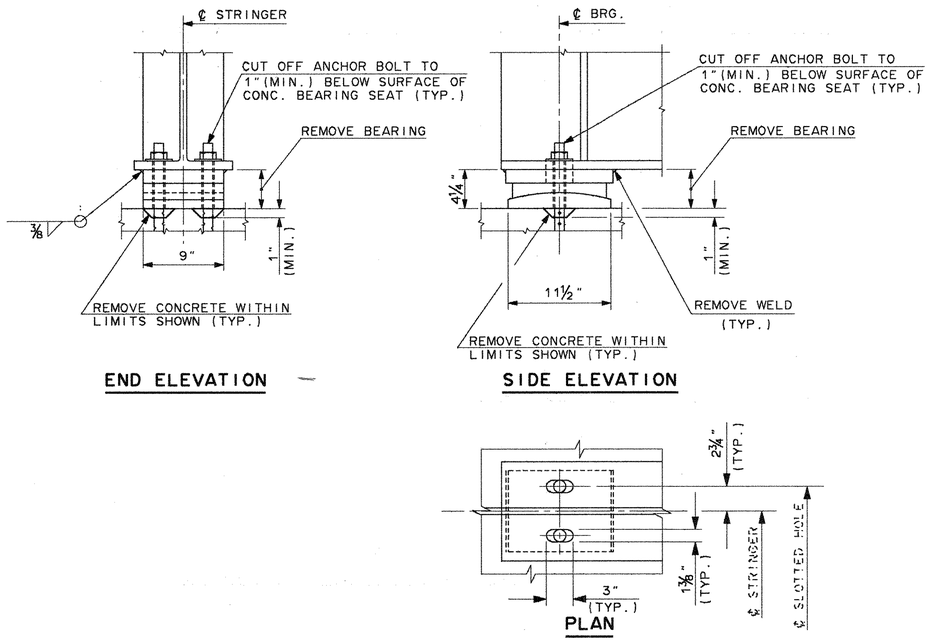

EXISTING BEARING DETAILS

SCALE: 1½"=1'-0"

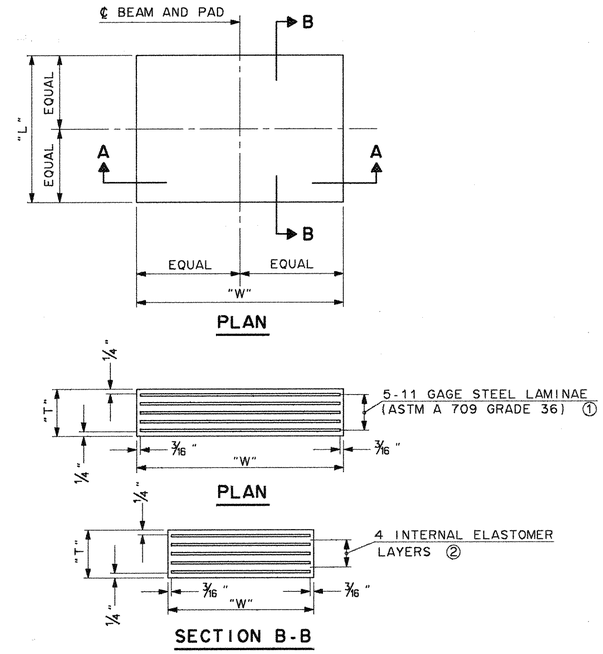

① FOR STRINGER S1,S2, S3, & S4 EXP.BEARINGS (4 LAMINAE FOR STRINGER S5, S6, & S7 EXP. BEARINGS)

② 3 LAYERS FOR STRINGER S5, S6, & S7 EXP. BEARINGS

ELASTOMERIC BEARING PAD

NOT TO SCALE

NOTES:

1. THE CONTRACTOR SHALL FIELD VERIFY ALL EXISTING DIMENSIONS AND ELEVATIONS PRIOR TO THE RESETTING OF THE BEARINGS.
2. THE STEEL FOR THE NEW BEARING ASSEMBLY SHALL CONFORM TO ASTM A709 GRADE 50W.
3. THE ELASTOMERIC BEARINGS SHALL BE INSTALLED WHEN THE AMBIENT TEMPERATURE IS BETWEEN 40o AND 60o F AND HAS BEEN WITHIN THIS RANGE FOR AT LEAST TWO HOURS.
4. THE ELASTOMERIC PADS SHALL BE VULCANIZED TO THE TOP STEEL PLATE.
5. EXISTING WELD TO BE CUT OFF AND GROUND SMOOTH IN FIELD.
6. FOR EXISTING BEARING DETAILS AND DIMENSIONS NOT SHOWN, SEE ORIGINAL DESIGN PLANS DATED 1-16-61, STATE PROJECT NO. 159-91.

SUGGESTED BEARING REPLACEMENT SEQUENCE:

WORK ON EXPANSION BEARINGS SHALL NOT BEGIN UNTIL ALL WORK ON FIXED BEARINGS, FOR THE CORRESPONDING SPAN, IS COMPLETED.

1. REMOVE EXISTING NUTS.
2. RAISE THE END OF SPAN (ALL STRINGERS SIMULTANEOUSLY) APPROXIMATELY ONE QUARTER INCH (1/4") TO RELIEVE BEARING LOADS.
3. ERECT TEMPORARY SUPPORTS TO CARRY ALL APPLIED DEAD AND LIVE LOADS. THE JACKS SHALL BE LEFT IN POSITION.
4. CUT OFF ANCHOR BOLTS NEAR CONCRETE PAD.
5. REMOVE UPPER ASSEMBLY (TOP SOLE PLATE).
6. REMOVE LOWER ASSEMBLY (CONCAVE PLATE AND MASONRY PLATES).
7. CUT ANCHOR BOLTS FLUSH WITH THE SURFACES OF THE CONCRETE BEARING PAD.
8. CLEAN AND SMOOTH BOTTOM SURFACE OF THE BOTTOM FLANGE OF THE EXISTING STRINGER IN CONTACT WITH NEW STEEL.
9. CLEAN AND SMOOTH EXISTING CONCRETE SURFACE TO BE IN CONTACT WITH THE NEW ELASTOMERIC PAD. REMOVE ANY BURRS OR EXTRANEOUS MATERIAL BEFORE INSTALLATION OF NEW PADS.
10. ALIGN AND WELD FILLER PLATE TO EXISTING BOTTOM FLANGE.
11. APPLY BONDING AGENT TO THE EXISTING CONCRETE SURFACE IN CONTACT WITH THE NEW PAD.
12. ALIGN BEARING ASSEMBLY.
13. INSTALL CONNECTION BOLTS AND TIGHTEN.
14. LOWER STRINGERS.

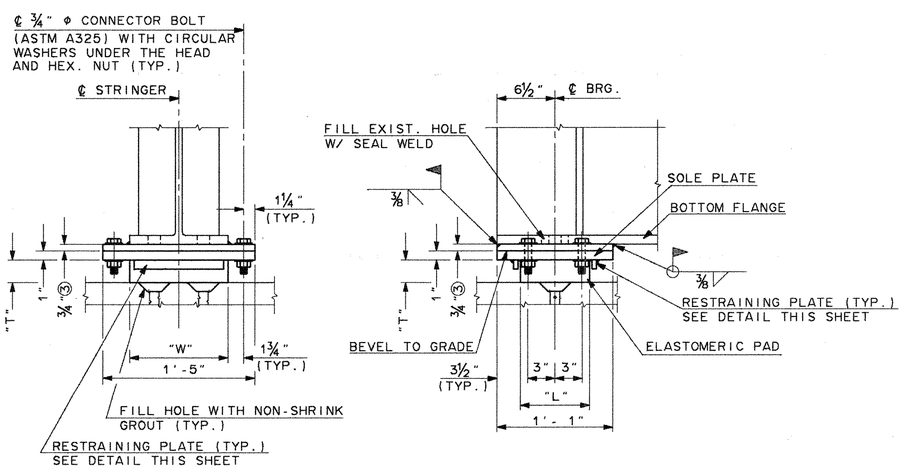

③ PLATE THICKNESS APPLIES AT ℄ BEARING FOR STRINGER S1,S2, S3, & S4 EXP.BEARINGS (1¼" FOR STRINGER S5, S6, & S7 EXP. BEARINGS)

PROPOSED ELASTOMERIC BEARING DETAILS

SCALE: 1½"=1'-0"

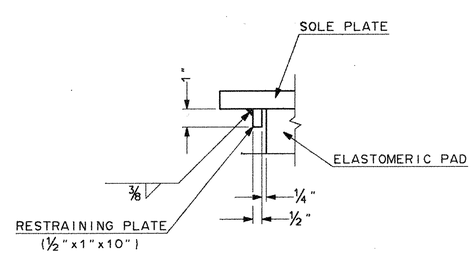

RESTRAINING PLATE DETAIL

SCALE: 3"=1'-0"

EXPANSION BEARING FOR STRINGER	ELASTOMERIC PAD			SOLE PLATE			NUMBER REQ'D
	L	W	T	LENGTH	WIDTH	THICKNESS	
S1, S2, S3, & S4	7¾"	11"	2½"	1'-1"	1'-5"	1"	17
S5, S6, & S7	6⅜"	11"	2"	1'-1"	1'-5"	1"	34
						TOTAL	51

NO.	DATE	DESCRIPTION

REVISIONS

STATE OF CONNECTICUT
DEPARTMENT OF TRANSPORTATION

HARTFORD-WETHERSFIELD

REHABILITATION OF
INTERSTATE ROUTE 91
OVER
GREAT MEADOW ROAD

EXPANSION BEARING DETAILS

ENGINEER STEINMAN BOYNTON GRONQUIST & BIRDSALL, INC.

DESIGNER CPL | DRAFTER GDD | CHECKER LM

APPROVED Ann T. Dia | DATE 9-11-92

STRUCTURE NO. 63-458-15 | BRIDGE LOG NO. 01459 | STRUCTURE SHEET NO. 10 OF 19

840280/1459EB0/9-8-92/CT

63-458

469-01

224

FORM NO. ENG 158 ED 4-80

F.H.W.A. REGION	STATE	TOWN	FED. AID PROJ. NO.	PROJ. NO.	YEAR	ROUTE NO.	SHEET NO.	TOTAL SHEETS
1	CONN.	HARTFORD-WETHERSFIELD	IR-91-3(149)37	63-458	1992	I-91	225	336

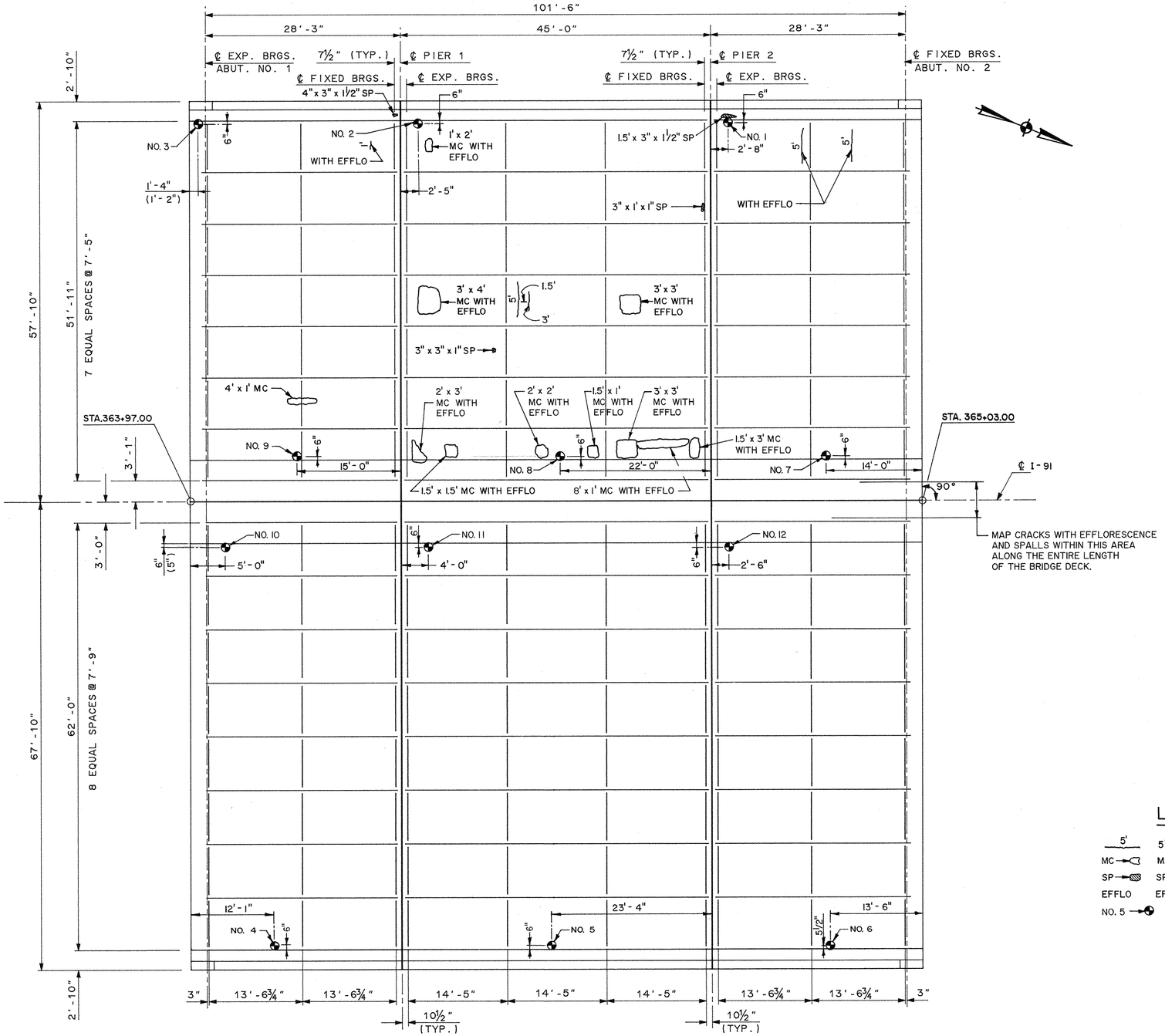

UNDERSIDE OF DECK PLAN

SCALE: ⅛"=1'-0"

NOTES:

1. All Dimensions And Locations Of Deteriorated Concrete Areas At The Underside Of Bridge Deck Are Approximate. The Actual Amounts And Repair Methods Shall Be Determined By The Engineer In The Field.
2. For Details Of Full And Partial Deck Patches, See Structure Sheet No. 12.
3. Open Crack Shall Be Repaired Under " Epoxy Injection Crack Repair ".

CHLORIDE ION TEST RESULTS

CORE HOLE NUMBER	SAMPLE DEPTH = 1½"		SAMPLE DEPTH = 3½"	
	TOTAL CHLORIDES LB/CY	SOLUBLE CHLORIDES LB/CY	TOTAL CHLORIDES LB/CY	SOLUBLE CHLORIDES LB/CY
1	1.91	-	0.76	-
2	1.15	-	0.76	-
3	1.15	-	0.76	-
4	0.76	-	0.76	-
5	0.76	-	0.76	-
6	0.76	-	0.76	-
7	2.67	2.29	3.05	2.29
8	5.72	4.96	1.53	-
9	3.05	2.67	2.67	2.29
10	2.29	1.91	0.76	-
11	2.67	2.29	0.76	-
12	0.76	-	0.76	-

LEGEND

- 5' — 5' HAIR LINE CRACKS
- MC — MAP CRACKS
- SP — SPALL AREA
- EFFLO — EFFLORESCENCE
- NO. 5 — LOCATION OF DECK CORES

NO.	DATE	DESCRIPTION

REVISIONS

CONNECTICUT
DEPARTMENT OF TRANSPORTATION

HARTFORD-WETHERSFIELD

REHABILITATION OF

INTERSTATE ROUTE 91

OVER

GREAT MEADOW ROAD

DECK REPAIR PLAN

ENGINEER STEINMAN BOYNTON GRONQUIST & BIRDSALL, INC.

DESIGNER C.P.L. | DRAFTER GDD / J.M.V. | CHECKER L.M.

APPROVED Cwo T. Ora | DATE 9-11-92

STRUCTURE NO. 63-458-15 | BRIDGE LOG NO. 01459 | STRUCTURE SHEET NO. 11 OF 19

840280/14590RD/9-16-91/CT and manual drafting

63-458

469-01

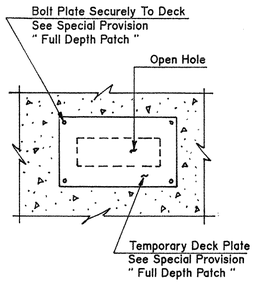

DECK PLATE DETAIL
NOT TO SCALE

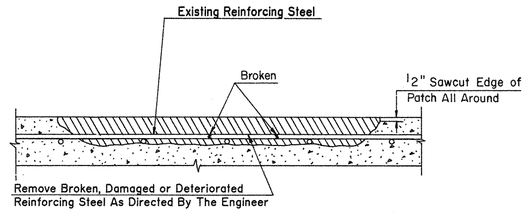

SECTION OF CONCRETE REMOVAL AREA SHOWING EXISTING REINFORCING STEEL

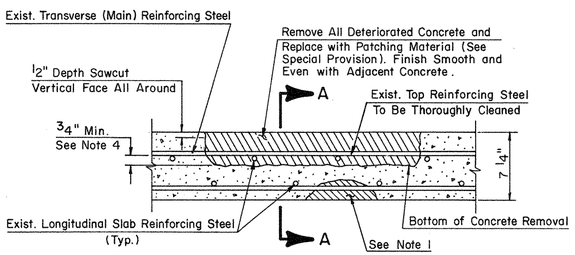

PATCH BELOW TOP REINFORCING STEEL "PARTIAL DEPTH PATCH"

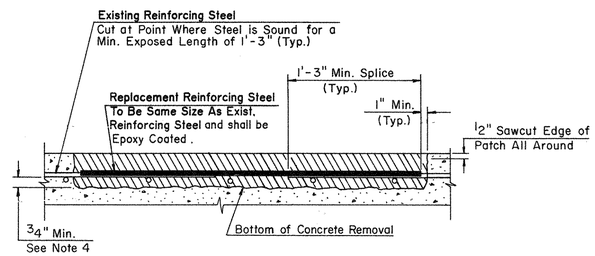

SECTION SHOWING REPAIR OF DEFORMED STEEL BARS

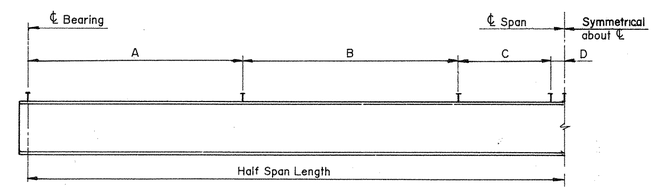

SHEAR STUD PLACEMENT DIAGRAM
NOT TO SCALE

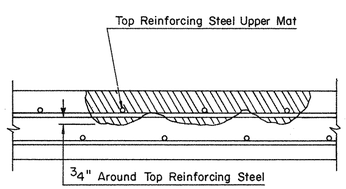

SECTION A-A

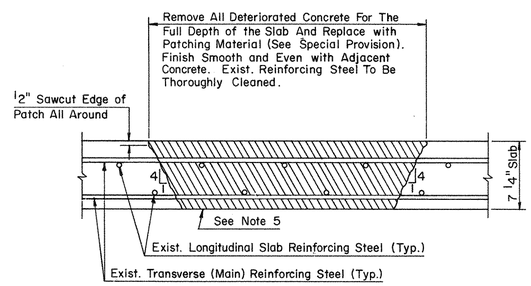

FULL DEPTH PATCH

STRINGER	STUD SPACING (INCHES)				ZONE LENGTH (INCHES)				TOTAL NO. PER STRINGER
	A	B	C	D	A	B	C	D	
S2 & S3	6"	7.5"	8"	7"	108"	67.5"	80"	7"	154
S1 & S4	6"	7.5"	8"	7"	108"	67.5"	80"	7"	77

TOTAL NO. STUDS REQ'D = 462

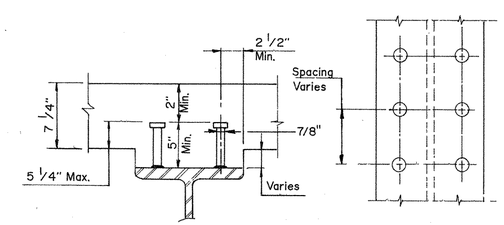

WELDED STUD SHEAR CONNECTOR DETAILS
SCALE: 1 1/2" = 1' - 0"

DECK REPAIR NOTES:

1. Areas of pop-outs caused by the removal of deteriorated concrete to be coated with epoxy resin system where ordered by the Engineer.
2. The cost of 1/2" depth sawcut shall be included in the contract unit price per C.Y. for "Partial Depth Patch" or "Full Depth Patch" as applicable.
3. Epoxy bonding compound shall be applied to partially exposed bars. The cost shall be included in the contract unit price per C.Y. for "Partial Depth Patch".
4. If, after concrete removal, the reinforcing steel has at least one half of its surface exposed, the concrete shall be further removed to a depth of 3/4" below the steel.
5. As directed by the Engineer, all voids and honeycombs on this surface shall be filled with the same material as used for "Full Depth Patch" and finished to conform to the surrounding concrete surface.

DECK REPAIR DETAILS
SCALE: 1 1/2" = 1' - 0"

THE INFORMATION, INCLUDING ESTIMATED QUANTITIES OF WORK SHOWN ON THESE SHEETS IS BASED ON LIMITED INVESTIGATIONS BY THE STATE AND IS IN NO WAY WARRANTED TO INDICATE THE TRUE CONDITIONS OR ACTUAL QUANTITIES OR DISTRIBUTION OF QUANTITIES OF WORK WHICH WILL BE REQUIRED.

NO.	DATE	DESCRIPTION

REVISIONS

STATE OF CONNECTICUT
DEPARTMENT OF TRANSPORTATION

HARTFORD-WETHERSFIELD

REHABILITATION OF
INTERSTATE ROUTE 91
OVER
GREAT MEADOW ROAD

DECK REPAIR & SHEAR CONNECTOR DETAILS

ENGINEER	STEINMAN BOYNTON GRONQUIST & BIRDSALL, INC.		
DESIGNER C.P.L.	DRAFTER M.C.F. /J.M.V.	CHECKER L.M.	
APPROVED Eugene T. Ross		DATE 9-11-92	
STRUCTURE NO. 63-458-15		BRIDGE LOG NO. 01459	STRUCTURE SHEET NO. 12 OF 19

F.HW.A. REGION NO.	STATE	TOWN	FED. AID PROJ. NO.	PROJ. NO.	YEAR	ROUTE NO.	SHEET NO.	TOTAL SHEETS
1	CONN.	HARTFORD-WETHERSFIELD	IR-91-3(149)37	63-458	1992	I-91	227	336

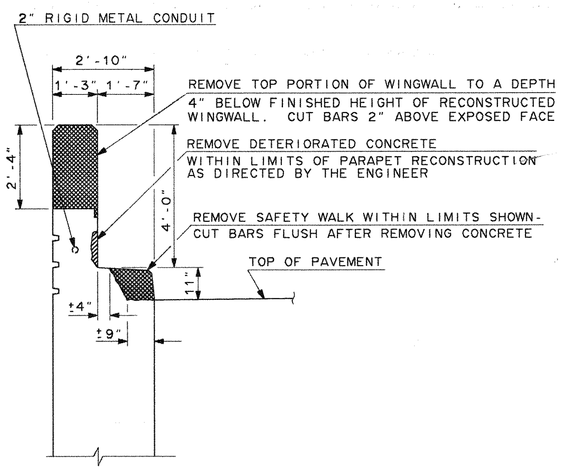

EXISTING WINGWALL

SCALE: ½"=1'-0"

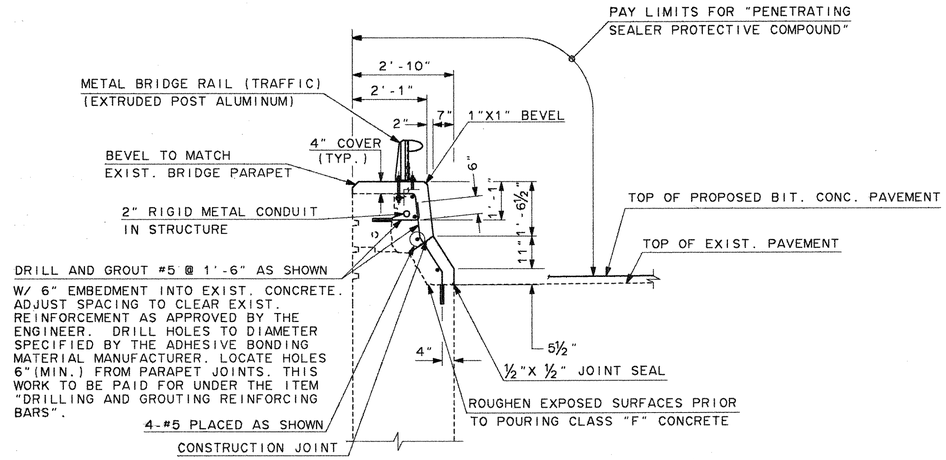

RECONSTRUCTED WINGWALL

SCALE: ½"=1'-0"

PARAPET RECONSTRUCTION NOTES:

1. REMOVAL OF CONCRETE AND REINFORCING OF BRIDGE PARAPET AND SAFETY WALK TO BE PAID FOR UNDER THE CONTRACT ITEM "REMOVAL OF CONCRETE SUPERSTRUCTURE".
2. REMOVAL OF CONCRETE AND REINFORCING OF WINGWALL PARAPET AND SAFETY WALK TO BE PAID FOR UNDER THE CONTRACT ITEM "REMOVAL OF EXISTING MASONRY".
3. FOR TREATMENT OF PARAPETS AT TRANSVERSE DECK JOINTS, SEE STRUCTURE SHEET NO. 14.
4. FOR POST SPACING OF METAL BRIDGE RAIL (TRAFFIC) (EXTRUDED POST ALUMINUM), SEE STRUCTURE SHEET NO. 15.
5. FOR DETAILS OF TRAFFIC RAIL ANCHORAGES, SEE STRUCTURE SHEET NO. 19.
6. CONTRACTOR SHALL VERIFY SPACING OF JOINTS PRIOR TO ORDERING LONGITUDINAL PARAPET REINFORCING.
7. THE DECK AREAS REQUIRING CONCRETE PATCHING SHALL BE DETERMINED BY THE ENGINEER PRIOR TO THE CONTRACTOR COMMENCING ANY RECONSTRUCTION WORK ON THE PARAPETS.
8. FOR ADDITIONAL REINFORCEMENT AT JUNCTION BOX SEE "PARAPET REINFORCEMENT DETAIL AT JUNCTION BOX", ON STRUCTURE SHEET NO. 16.

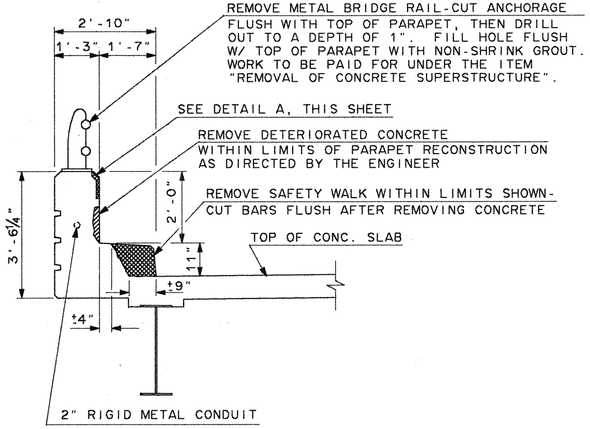

EXISTING BRIDGE

SCALE: ½"=1'-0"

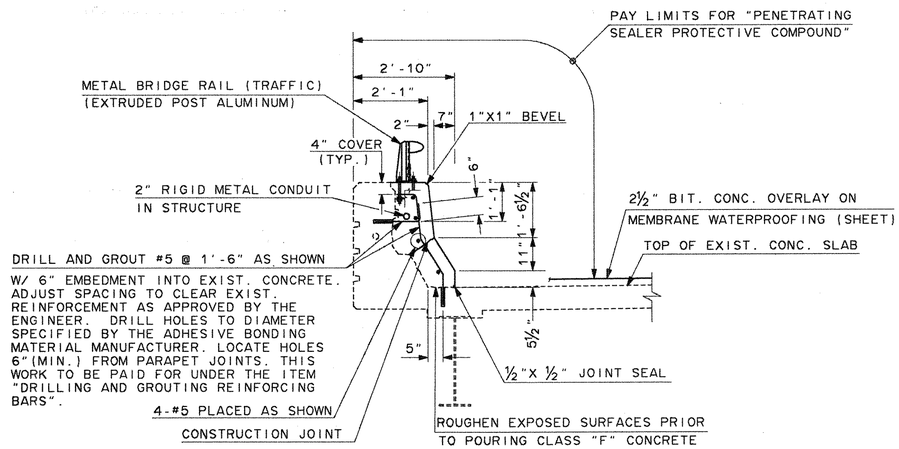

RECONSTRUCTED BRIDGE

SCALE: ½"=1'-0"

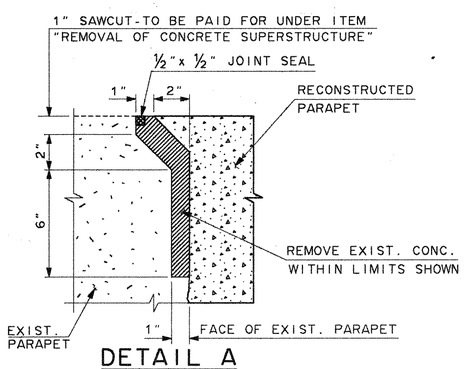

DETAIL A

SCALE: 3"=1'-0"

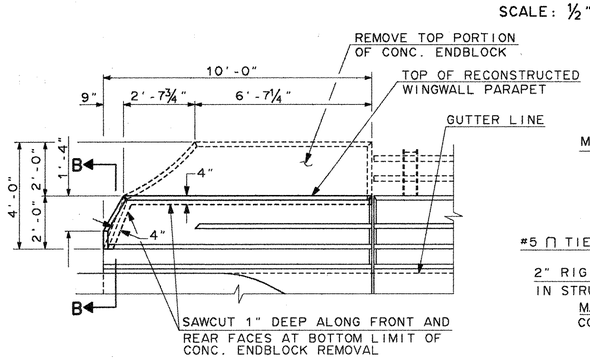

TYPICAL WINGWALL ELEVATION

SCALE: ⅜"=1'-0"

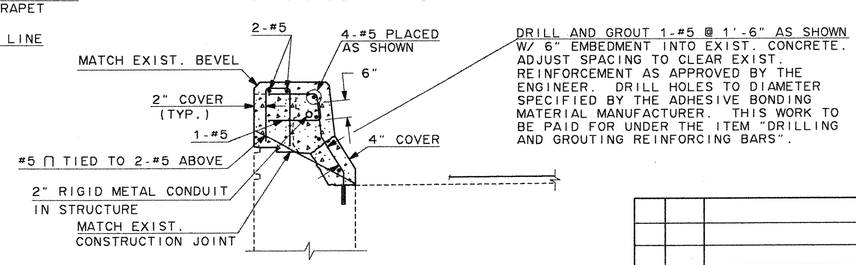

SECTION B-B

SCALE: ½"=1'-0"

NO.	DATE	DESCRIPTION

F.HW.A. REGION NO.	STATE	TOWN	FED. AID PROJ. NO.	PROJ. NO.	YEAR	ROUTE NO.	SHEET NO.	TOTAL SHEETS
1	CONN.	HARTFORD-WETHERSFIELD	IR-91-3(149)37	63-458	1992	I-91	228	336

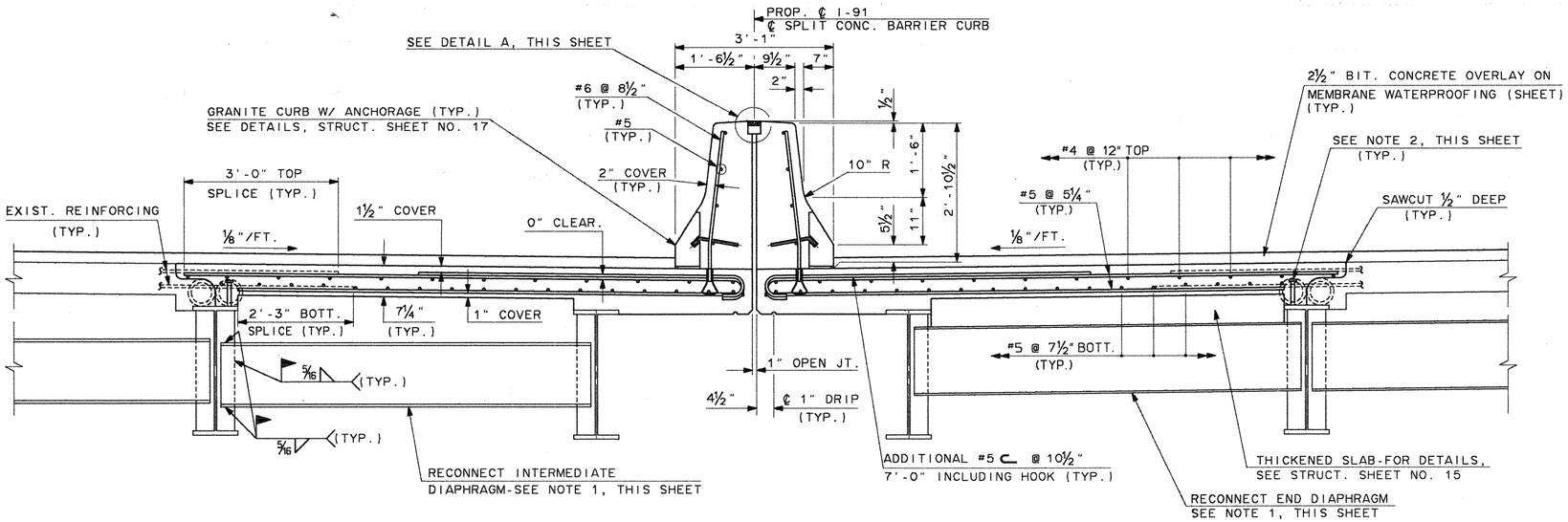

TYPICAL RECONSTRUCTION SECTION

SCALE: ¾"=1'-0"

NOTES:

1. RECONNECT DIAPHRAGM WELDS AFTER THE NEW PORTION OF THE DECK AND SPLIT MEDIAN BARRIER HAVE BEEN CAST. TYPICAL BOTH ENDS OF DIAPHRAGM.
2. REMOVE EXISTING SPIRAL OR EXISTING WELDED STUDS AND REPLACE WITH NEW WELDED STUDS. FOR STUD SPACING, SEE STRUCTURE SHEET NO. 12. REMOVAL OF EXISTING SPIRAL OR WELDED STUDS SHALL BE PAID FOR UNDER CONTRACT ITEM, "REMOVAL OF CONCRETE SUPERSTRUCTURE".

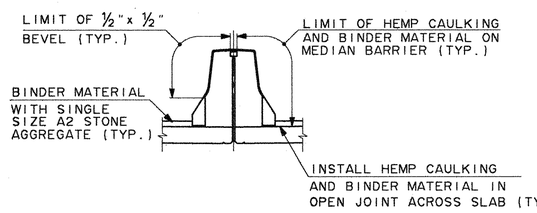

SECTION A-A

SCALE: ⅜"=1'-0"

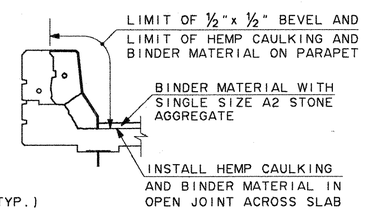

SECTION B-B

SCALE: ⅜"=1'-0"

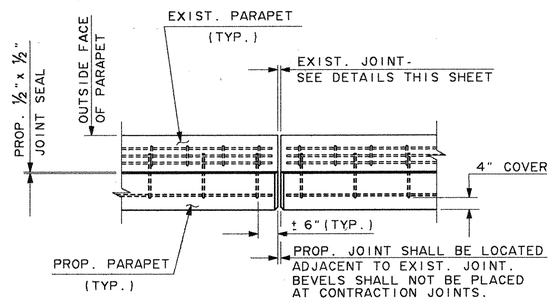

SECTION C-C

SCALE: ½"=1'-0"

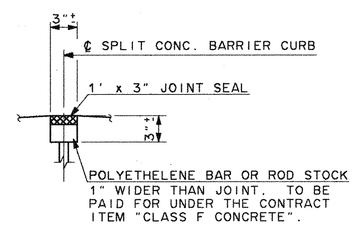

DETAIL A

SCALE: 1½"=1'-0"

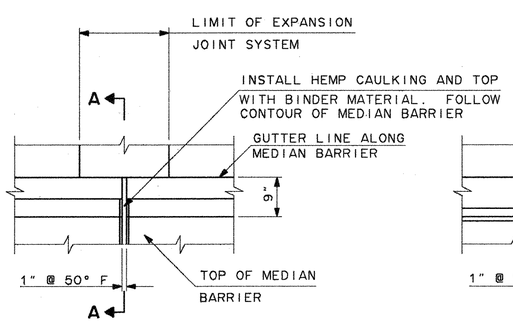

AT MEDIAN BARRIER

SCALE: ¾"=1'-0"

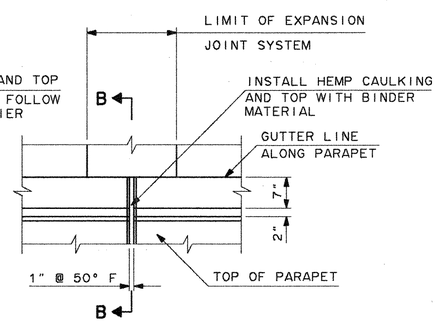

AT PARAPET

SCALE: ¾"=1'-0"

TYPICAL EXPANSION JOINT DETAILS

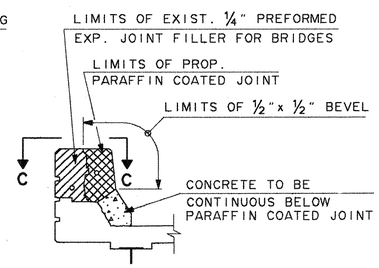

PARAFFIN COATED JOINTS

SCALE: ⅜"=1'-0"

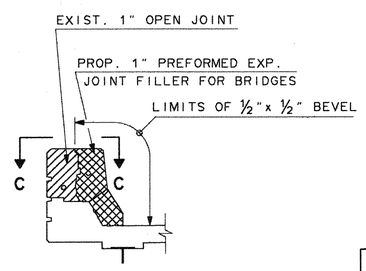

EXPANSION JOINT BETWEEN WINGWALL AND SUPERSTRUCTURE

SCALE: ⅜"=1'-0"

PARAPET JOINT DETAILS

NO.	DATE	DESCRIPTION

F.HW.A. REGION NO.	STATE	TOWN	FED. AID PROJ. NO.	PROJ. NO.	YEAR	ROUTE NO.	SHEET NO.	TOTAL SHEETS
1	CONN.	HARTFORD-WETHERSFIELD	IR-91-3(149)37	63-458	1992	I-91	229	336

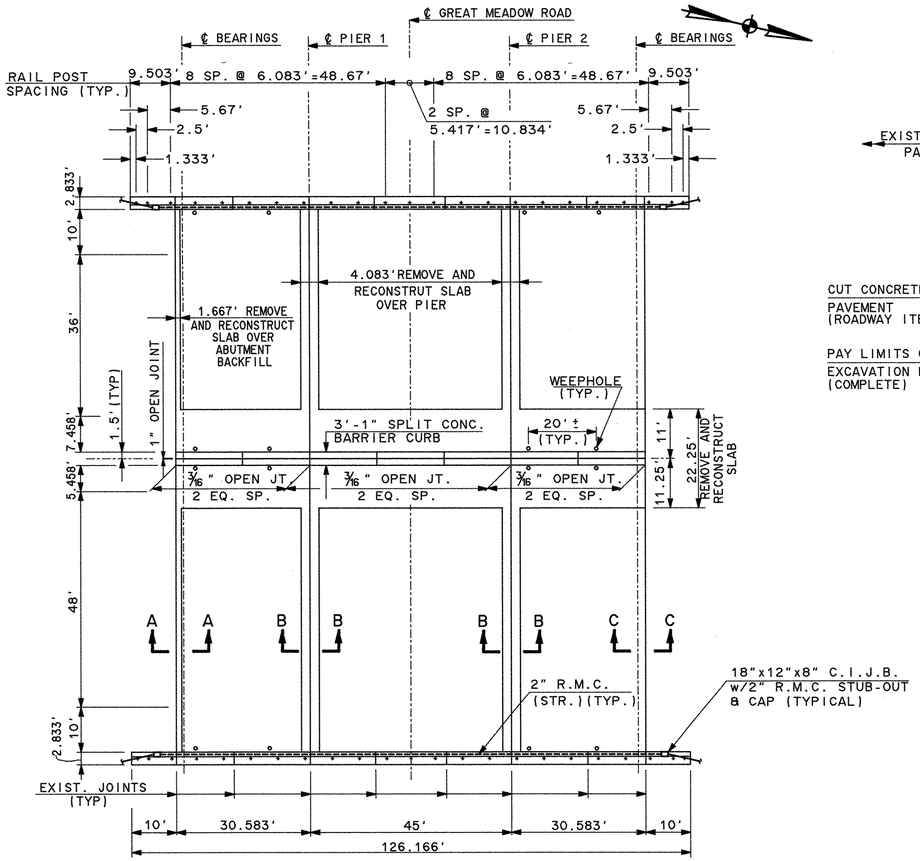

PARTIAL DECK REPLACEMENT PLAN

SCALE: 1/16" = 1'-0"

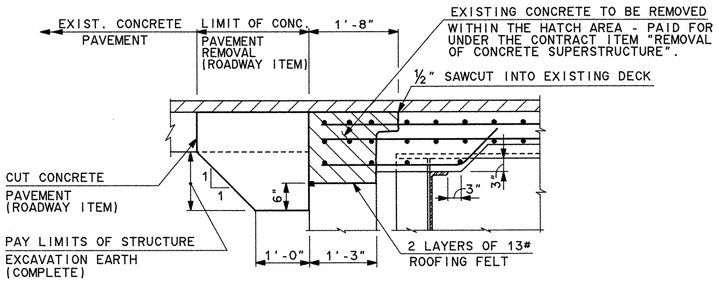

SECTION A-A
(EXISTING CONDITION)

SCALE: 3/4" = 1'-0"

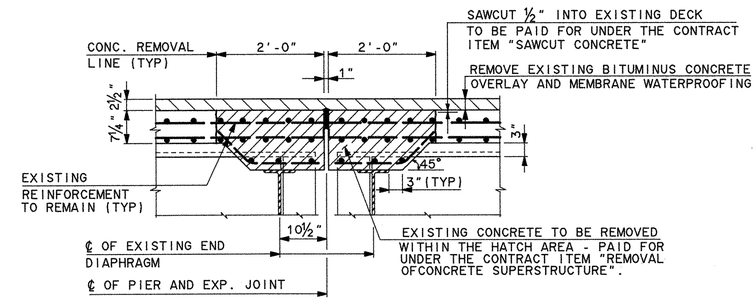

SECTION B-B
(EXISTING CONDITION)

SCALE: 3/4" = 1'-0"

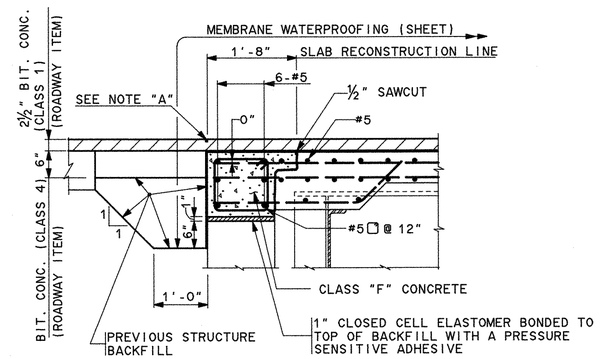

SECTION A-A
(PROPOSED CONDITION)

SCALE: 3/4" = 1'-0"

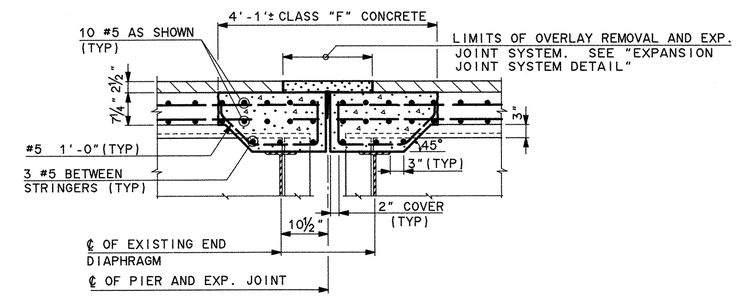

SECTION B-B
(FINAL CONDITION)

SCALE: 3/4" = 1'-0"

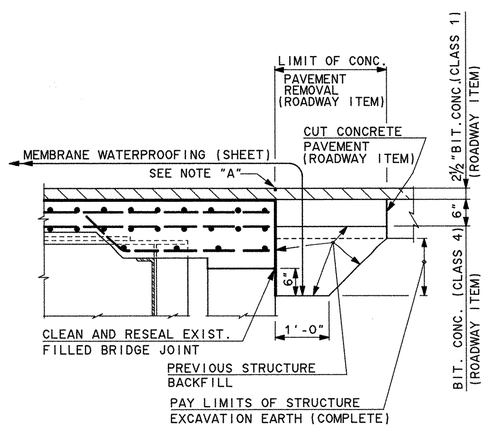

SECTION C-C

SCALE: 3/4" = 1'-0"

NOTE "A"

CUT OVERLAY WITH A 3/8" x 1 3/4" DEEP KERF AND FILL WITH A POURABLE SEALANT. COST OF CUTTING AND SEALING TO BE PAID FOR AT THE CONTRACT UNIT PRICE PER FOOT FOR "SAWING AND SEALING JOINTS".

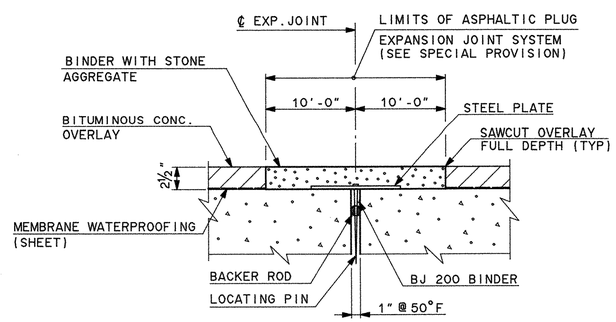

EXPANSION JOINT SYSTEM DETAIL

N.T.S.

NO.	DATE	DESCRIPTION

FORM NO. ENG. 158 ED 4-80

F.H.W.A. REGION	STATE	TOWN	FED. AID PROJ. NO.	PROJ. NO.	YEAR	ROUTE NO.	SHEET NO.	TOTAL SHEETS
1	CONN	HARTFORD-WETHERSFIELD	IR-91-3(149)37	63-458	1992	I-91	230	336

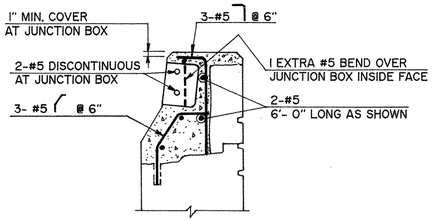

SECTION A-A

SCALE : 1/2"= 1'- 0"

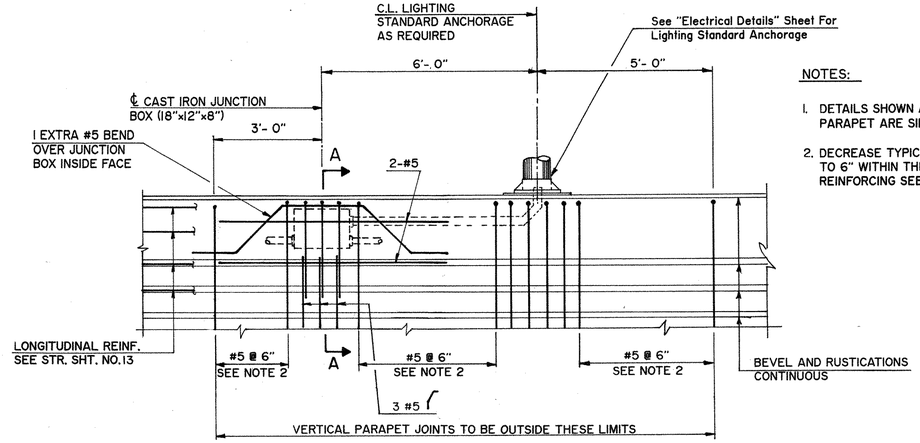

NOTES:

1. DETAILS SHOWN AT WINGWALL. DETAILS AT PARAPET ARE SIMILAR.
2. DECREASE TYPICAL REINFORCING SPACING TO 6" WITHIN THESE REGIONS. FOR TYPICAL REINFORCING SEE STRUCTURE SHEET NO. 13.

ELEVATION

SCALE: 1/2"= 1'- 0"

PARAPET REINFORCEMENT DETAILS AT JUNCTION BOX AND LIGHTING STANDARD

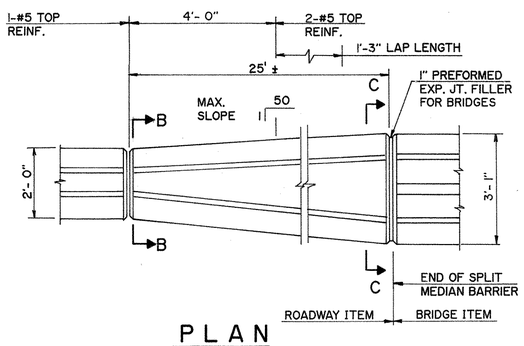

PLAN

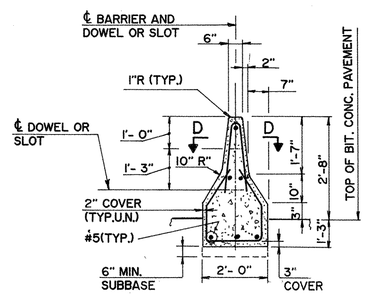

SECTION B-B

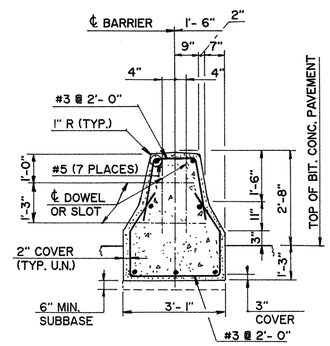

SECTION C-C

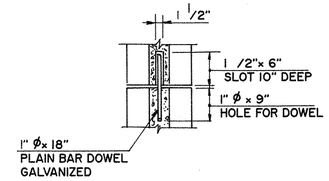

SECTION D-D

C-I-P CONCRETE BARRIER TRANSITION CURB DETAILS (ROADWAY ITEMS)

SCALE : 1/2"= 1'- 0"

NOTE : C-I-P CONCRETE BARRIER TRANSITION CURB TO BE PAID FOR UNDER THE ITEM " 24"x32" PRECAST CONCRETE BARRIER CURB".

NO.	DATE	DESCRIPTION

REVISIONS

CONNECTICUT
DEPARTMENT OF TRANSPORTATION

HARTFORD-WETHERSFIELD

REHABILITATION OF
INTERSTATE ROUTE 91
OVER
GREAT MEADOW ROAD

REINFORCING DETAILS

ENGINEER STEINMAN BOYNTON GRONQUIST & BIRDSALL, INC.

DESIGNER CPL | DRAFTER MCF | CHECKER JWP

APPROVED Guo T. Pan | DATE 9-11-92

STRUCTURE NO. 63-458-15 | BRIDGE LOC. NO. 01459 | STRUCTURE SHEET NO. 16 OF 19

F.H.W.A. REGION NO.	STATE	TOWN	FED. AID PROJ. NO.	PROJ. NO.	YEAR	ROUTE NO.	SHEET NO.	TOTAL SHEETS
1	CONN.	HARTFORD-WETHERSFIELD	IR-91-3(149)37	63-458	1992	I-91	231	336

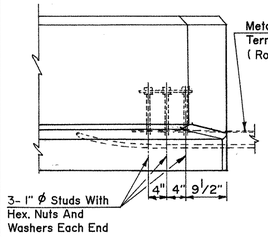

PLAN

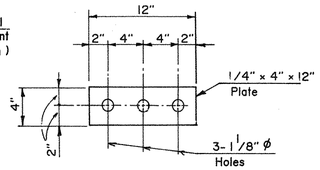

ANCHORAGE PLATE

SCALE: 1 1/2" = 1'- 0"

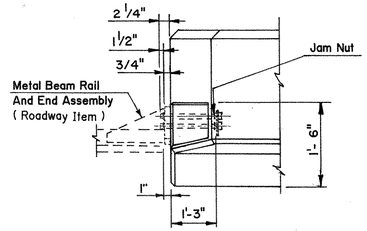

PLAN

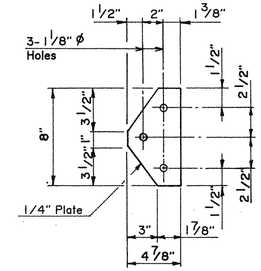

ANCHORAGE PLATE

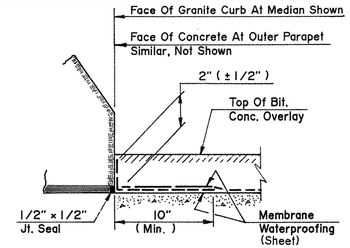

TREATMENT OF MEMBRANE

WATERPROOFING AT GUTTERS

SCALE: 1 1/2" = 1'- 0"

* The Cost Of Furnishing And Installing 1/4" Square Galvanized Mesh Shall Be Included In The Contract Bid Price Per Ton For "Bituminous Concrete - Class (12)".

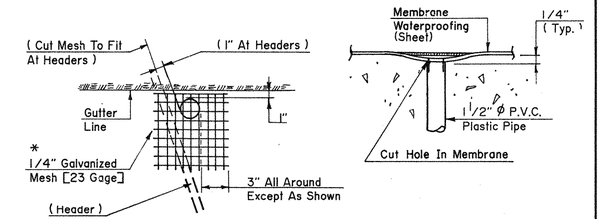

PLAN SECTION

TYPICAL DRAIN DETAIL

N.T.S.

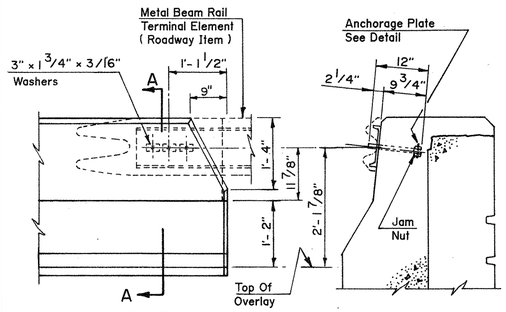

ELEVATION SECTION A-A

LEADING END

Note:

Anchor bolts shall conform to the requirements of ASTM A449 with nuts and washers conforming to A563 Grade B.

Anchor bolts, nuts and washers shall be galvanized in conformance with requirements of ASTM A153.

Anchorage plates shall conform to the requirements of ASTM A36.

All anchorage material will be paid for at the contract unit price per pound for "Deformed Steel Bars" (Epoxy Coated).

Entire anchorage shall be galvanized after fabrication.

METAL BEAM RAIL ANCHORED TO FACE OF PARAPET

(TYPE R-I)

SCALE: 3/4" = 1'- 0"

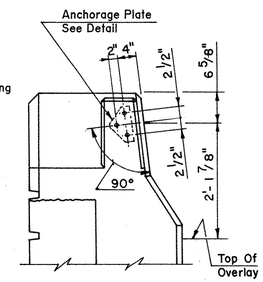

END ELEVATION

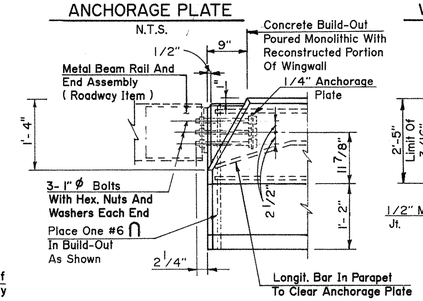

ELEVATION

TRAILING END

METAL BEAM RAIL ANCHORED TO END OF PARAPET

(TYPE R-I)

SCALE: 3/4" = 1'- 0"

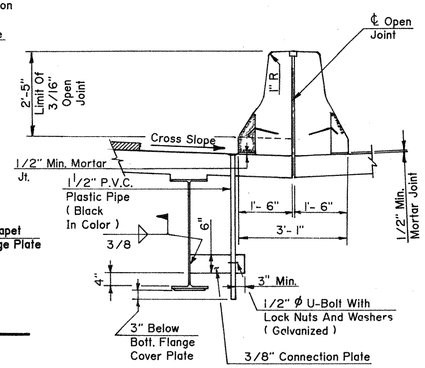

MEDIAN BARRIER

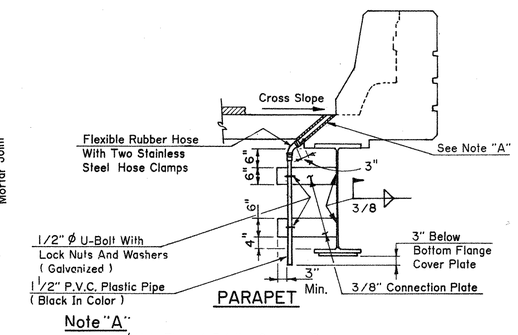

PARAPET

Note "A"

Core 3"Ø Hole Through Existing Concrete Deck, Insert P.V.C. Pipe And Fill Around With Non-Shrink Grout

P.V.C. PIPE DETAILS

SCALE: 1/2" = 1'- 0"

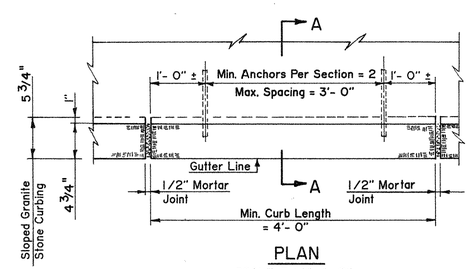

PLAN

SCALE; 3/4"= 1'- 0"

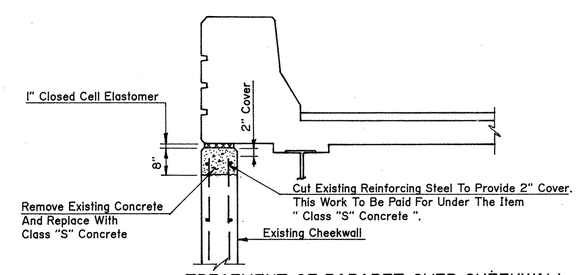

TREATMENT OF PARAPET OVER CHEEKWALL

AT WINGWALL IA AND IB

SCALE: 1/2"= 1'- 0"

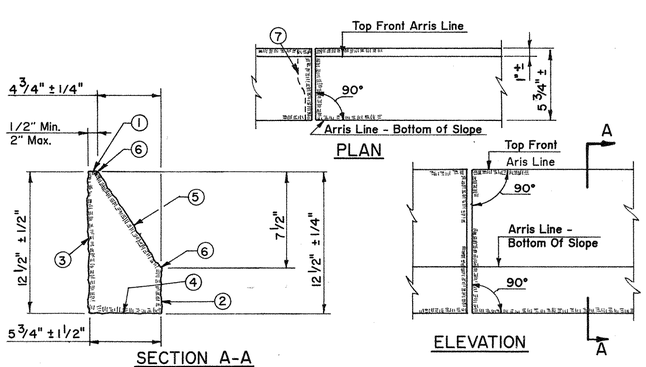

PLAN

SECTION A-A ELEVATION

SLOPED GRANITE STONE CURBING TOLERANCES

N.T.S.

1. Sawed surface approximating a true plane with no projections or depressions greater than 1/4".
2. Smooth, quarry split surface, free of drill holes, with projections or depressions not over 1/2".
3. Split surface shall be free of any projections over 1".
4. Sawed or split surface approximating a true plane to the specified dimensions with projection no greater than 1/4".
5. Sawed surface free of all quarry sawing and cutting marks with allowable depressions or projections not over 1/4".
6. These arris lines shall be straight and true within a ± tolerance of 1/4".
7. Ends of stones at intermediate joints shall be held full for 2" from all exposed surfaces with a permitted variation of 1/4". Beyond this area the joint may fall away a max. of 3".

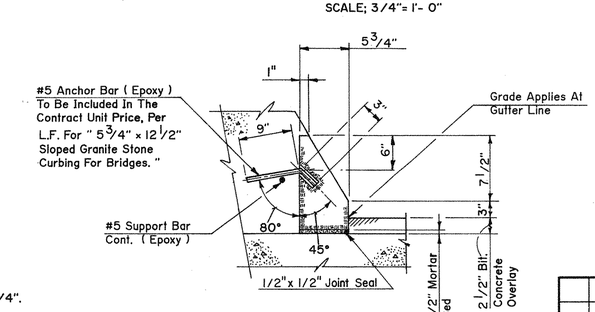

SECTION A-A

SCALE: 1"= 1'- 0"

ANCHORAGE DETAILS

NO.	DATE	DESCRIPTION

REVISIONS

CONNECTICUT

DEPARTMENT OF TRANSPORTATION

HARTFORD-WETHERSFIELD

REHABILITATION OF

INTERSTATE ROUTE 91

OVER

GREAT MEADOW ROAD

MISCELLANEOUS DETAILS

ENGINEER STEINMAN BOYNTON CRONQUIST & BIRDSALL, INC.

DESIGNER C.P.L. DRAFTER J.M.V. CHECKER L.M.

APPROVED Cwo T. Ora DATE 9-11-92

STRUCTURE NO. 63-458-15 BRIDGE LOG NO. 01459 STRUCTURE SHEET NO. 17 OF 19

F.H.W.A. REGION NO.	STATE	TOWN	FED. AID PROJ. NO.	PROJ. NO.	YEAR	ROUTE NO.	SHEET NO.	TOTAL SHEETS
1	CONN.	HARTFORD - WETHERSFIELD	IM-91-3(157)57	63-458	1992	I-91	232	336

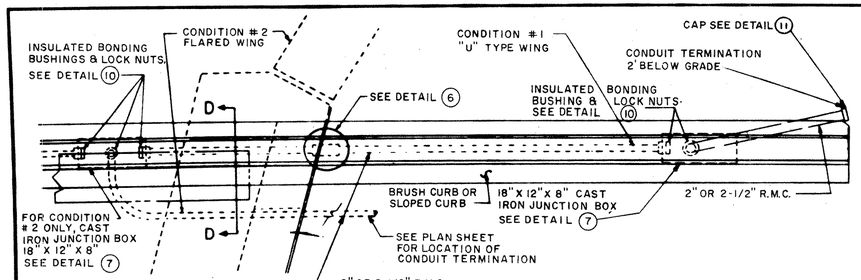

NOTE:
1. UTILIZE 30° BENDS TO FACILIATE CONDUIT LEAVING WINGWALL AT 2'-0" BELOW GRADE.
2. CONDUIT BENDS SHALL HAVE A RADIUS OF NOT LESS THAN 6 TIMES THE TRADE SIZE OF CONDUIT.

(1) CONDUIT PARAPET TO FILL
PLAN SCALE ½" = 1'

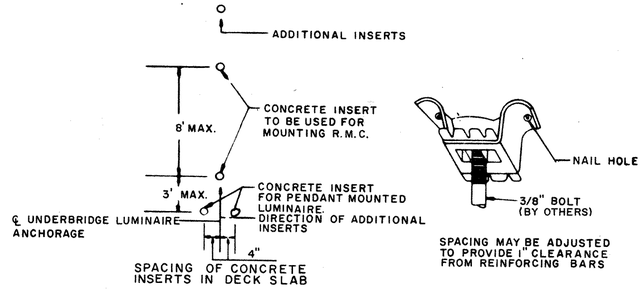

(4) CONCRETE INSERT DETAIL

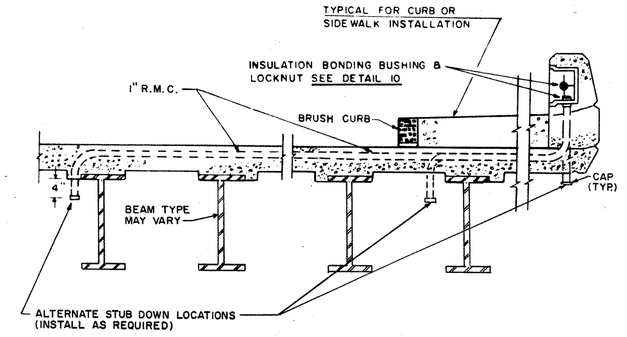

(9) SERVICE TO LUMINAIRE UNDER STRUCTURE

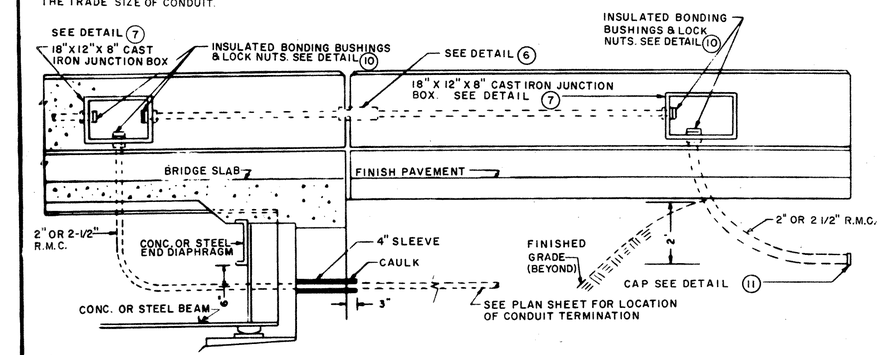

(2) CONDUIT PARAPET TO FILL
ELEVATION SCALE ½" = 1'

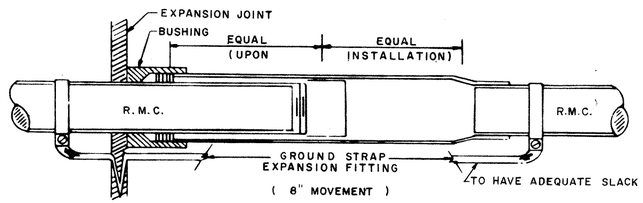

(6) DETAIL OF EXPANSION FITTING
USE AT ALL EXPANSION JOINTS

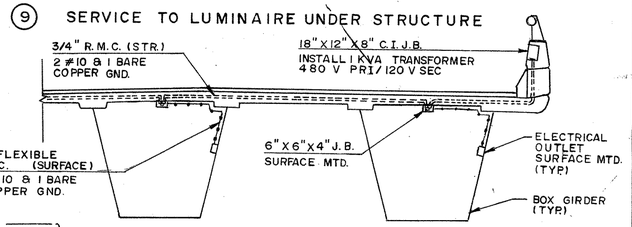

TYPICAL BRIDGE SECTION

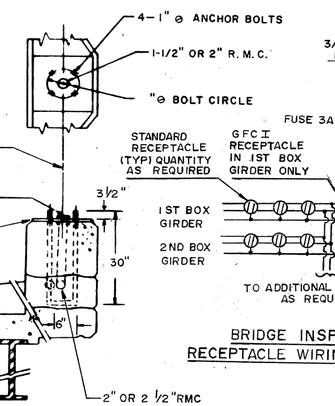

(5)

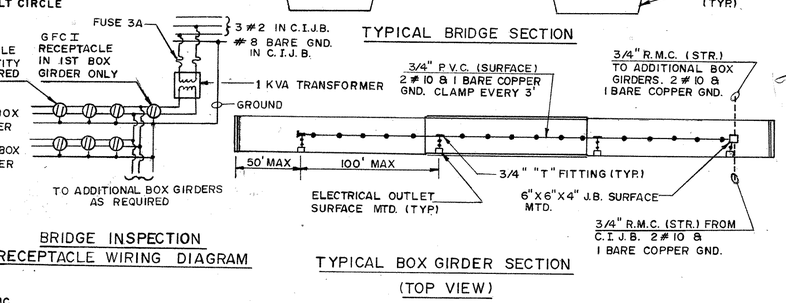

(8) SERVICE TO BRIDGE INSPECTION RECEPTACLES

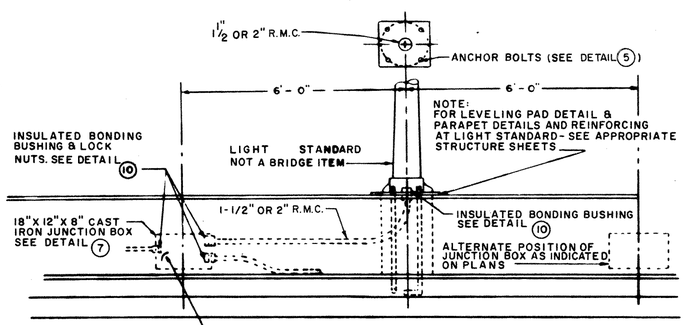

(3) LIGHTING STANDARD ON PARAPET WALL

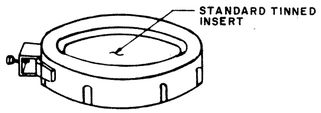

(10) CAPPED INSULATED BONDING BUSHING WITH GROUND LUG

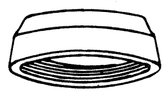

(11) MALLEABLE IRON CAP

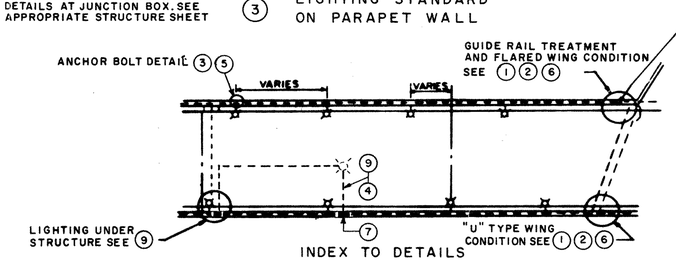

INDEX TO DETAILS

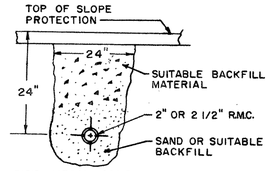

RIGID METAL CONDUIT UNDER SLOPE PROTECTION

(12)

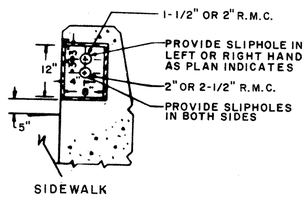

(7) JUNCTION BOX INSTALLATION
(USE APPLICABLE DETAIL)

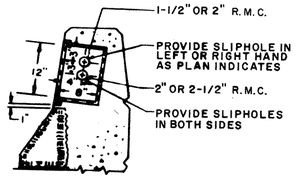

SLOPED CURB

NOTE:
FOR PARAPET AND REINFORCING DETAILS AT JUNCTION BOX, SEE APPROPRIATE STRUCTURE SHEET.

ABBREVIATIONS & TERMS	
℄ L.S.A.	- ℄ LIGHT STANDARD ANCHORAGE
R.M.C. (S.P.)	- RIGID METAL CONDUIT UNDER SLOPE PROTECTION
R.M.C. STR.	- RIGID METAL CONDUIT IN STRUCTURE
C.I.J.B.	- CAST IRON JUNCTION BOX
℄ U.L.A.	- ℄ UNDERBRIDGE LUMINAIRE ANCHORAGE
R.M.C. (SD)	- RIGID METAL CONDUIT STUB DOWN

* NOTE: FOR DETAILS THAT APPLY ONLY

	DET. NO.	DESCRIPTION
*	1	CONDUIT PARAPET TO FILL
*	2	CONDUIT PARAPET TO FILL
	3	LIGHTING STANDARD ON PARAPET WALL
	4	CONCRETE INSERT
	5	PARAPET TREATMENT AT LIGHT STANDARD
*	6	DETAIL OF EXPANSION FITTING
*	7	JUNCTION BOX INSTALLATION
	8	SERVICE TO BRIDGE INSPECTION RECEPTACLE
	9	SERVICE TO LUMINAIRE UNDER STRUCTURE
*	10	CAPPED INSULATED BONDING BUSHING WITH GROUND LUG
*	11	MALLEABLE IRON CAP
	12	RIGID METAL CONDUIT UNDER SLOPE PROTECTION

CONNECTICUT
DEPARTMENT OF TRANSPORTATION
BUREAU OF HIGHWAYS

HARTFORD - WETHERSFIELD

REHABILITATION OF INTERSTATE ROUTE 91 OVER GREAT MEADOW ROAD

ELECTRICAL DETAILS

SUBMITTED BY [signature] ENG. OF TRAFFIC ELECTRICAL DATE 5/54
APPROVED [signature] CHIEF OF TRAFFIC ENGINEERING DATE 5/22/84

SCALE: NONE

STRUCTURE NO. 63-458-15 (1) STRUCTURE SHEET 18 OF 19.

63-458

469-01

232

F.H.W.A. REGION	STATE	TOWN	FED. AID PROJ. NO.	PROJ. NO.	YEAR	ROUTE NO.	SHEET NO.	TOTAL SHEETS
1	CONN	HARTFORD-WETHERSFIELD	IR-91-3(149)37	63-458	1992	I-91	233	336

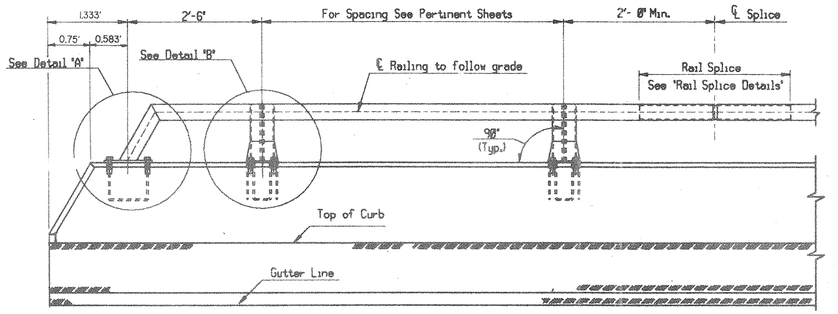

ELEVATION

Scale : ¾"= 1'- 0"

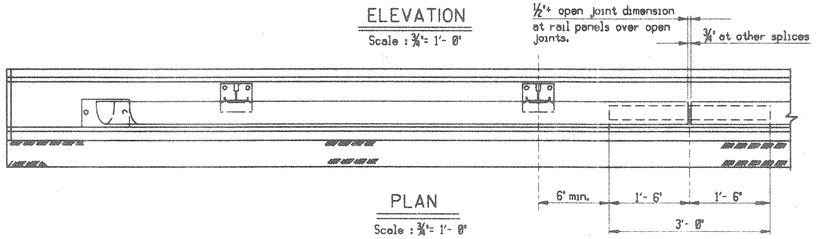

PLAN

Scale : ¾"= 1'- 0"

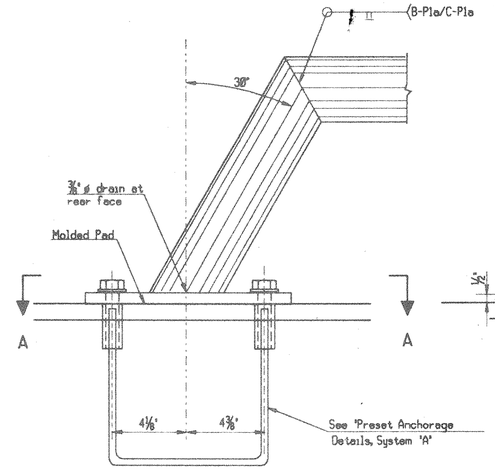

DETAIL "A"

Scale: 3"= 1'- 0"

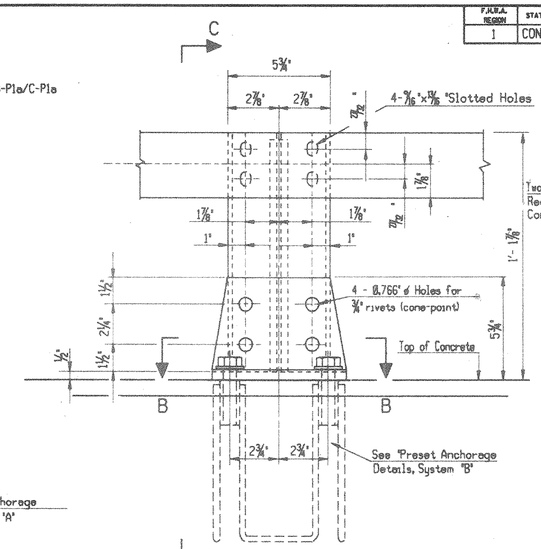

DETAIL "B"

Scale: 3"= 1'- 0"

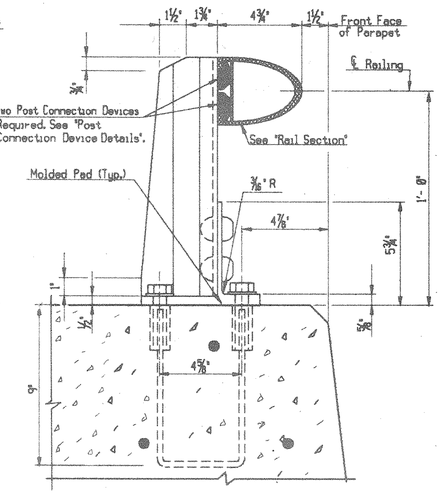

SECTION C-C

Scale: 3"= 1'- 0"

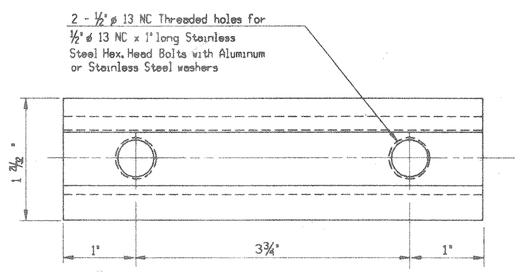

VIEW D-D

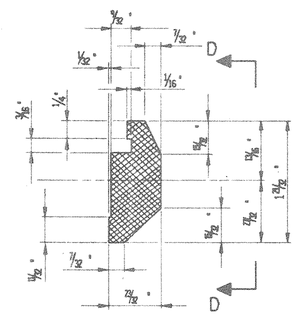

SECTION THRU POST CONNECTION DEVICE

POST CONNECTION DEVICE DETAILS

Full Scale

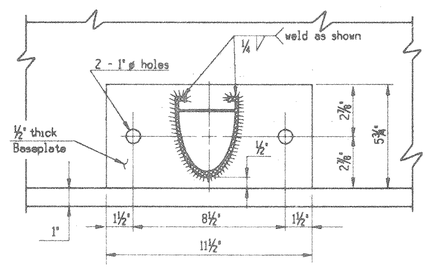

SECTION A-A

Scale: 3"= 1'- 0"

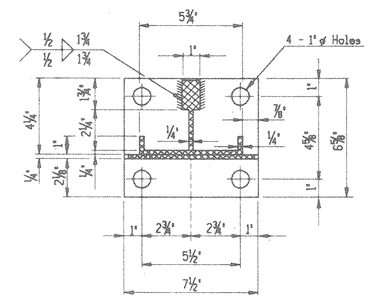

SECTION B-B

Scale: 3"= 1'- 0"

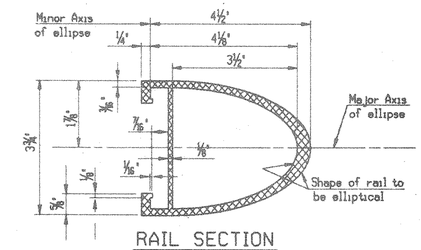

RAIL SECTION

½ Scale

NOTES

The posts, bases, post connection devices, splice bars and rails shall be extruded aluminum conforming to ASTM B221, aluminum alloy 6061-T6.

All bolts shall be stainless steel and conform to the requirements of ASTM A193, Class 2 : B8 (AISI Type 304). Stainless steel washers shall conform to ASTM A167, Type 302.

Lengths of rail elements shall be continuous over a minimum of four rail posts wherever possible and in no case less than two. Welding of two or more rails to form an element will not be allowed. In addition, rail splices are required in rail panels over open joints in parapets.

All railing anchorage systems shall be fabricated and installed perpendicular to the grade.

The splice bar shall have a sliding fit in the rail sections.

All rails and posts shall be free of burrs, irregularities and sharp edges.

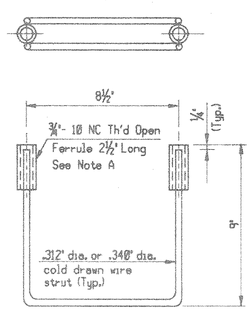

SYSTEM "A"

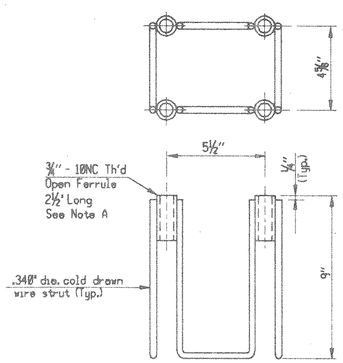

SYSTEM "B"

PRESET ANCHORAGE DETAILS

Scales: 3" = 1'- 0"

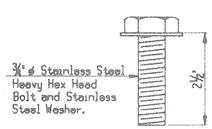

BOLT FOR PRESET ANCHORAGE SYSTEM

NOT TO SCALE

Note A : Alternatively, 2½" long closed end ferrules, providing a minimum full thread length of 2", may be used.

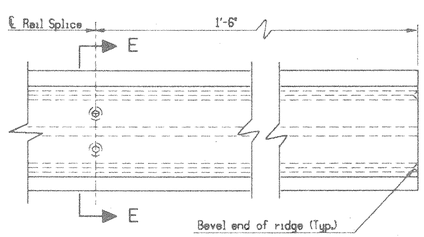

ELEVATION OF SPLICE BAR

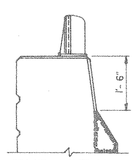

END VIEW

SCALE : 1/2" = 1'- 0"

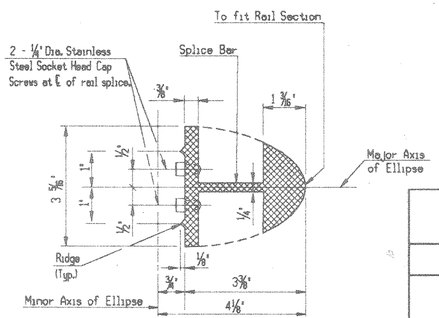

SECTION E-E

RAIL SPLICE DETAILS

½ Scale

THE INFORMATION, INCLUDING ESTIMATED QUANTITIES OF WORK SHOWN ON THESE SHEETS IS BASED ON LIMITED INVESTIGATIONS BY THE STATE AND IS IN NO WAY WARRANTED TO INDICATE THE TRUE CONDITIONS OR THE ACTUAL QUANTITIES OR DISTRIBUTION OF QUANTITIES OF WORK WHICH WILL BE REQUIRED.

NO.	DATE	DESCRIPTION

REVISIONS

STATE OF CONNECTICUT
DEPARTMENT OF TRANSPORTATION

HARTFORD-WETHERSFIELD

REHABILITATION OF
INTERSTATE ROUTE 91
OVER
GREAT MEADOW ROAD

METAL BRIDGE RAIL (TRAFFIC)

ENGINEER STEINMAN BOYNTON GRONQUIST & BIRDSALL, INC.

DESIGNER JWP | DRAFTER | CHECKER CEB

APPROVED Cuo T. Oa | DATE 9-11-92

STRUCTURE NO. 63-458-15 | BRIDGE LOC NO. 01459 | STRUCTURE SHEET NO. 19 of 19

C MB2.DGN 3/91