FORM NO. ENG. 15 ED. 11-62

PUB. ROAD DIV. NO.	STATE	TOWN	FED. AID PROJ. NO.	PROJ. NO.	YEAR	ROUTE NO.	SHEET NO.	TOTAL SHEETS
1	CONN.	WETHERSFIELD	I-10-91 (2)(3)	118-68	1960	I-91	94	236

INDEX OF PLANS

1. GENERAL PLAN
2. BORINGS
3. SECTION ℄ ELEVATION
4. ABUTMENTS - N. B. BRIDGE
5. ABUTMENTS - S. B. BRIDGE
6. PARAPET AND SLAB DETAILS
7. PIERS
8. PIER DETAILS
9. SUPERSTRUCTURE DETAILS
10. METAL BRIDGE RAIL
11. ELECTRICAL DETAILS

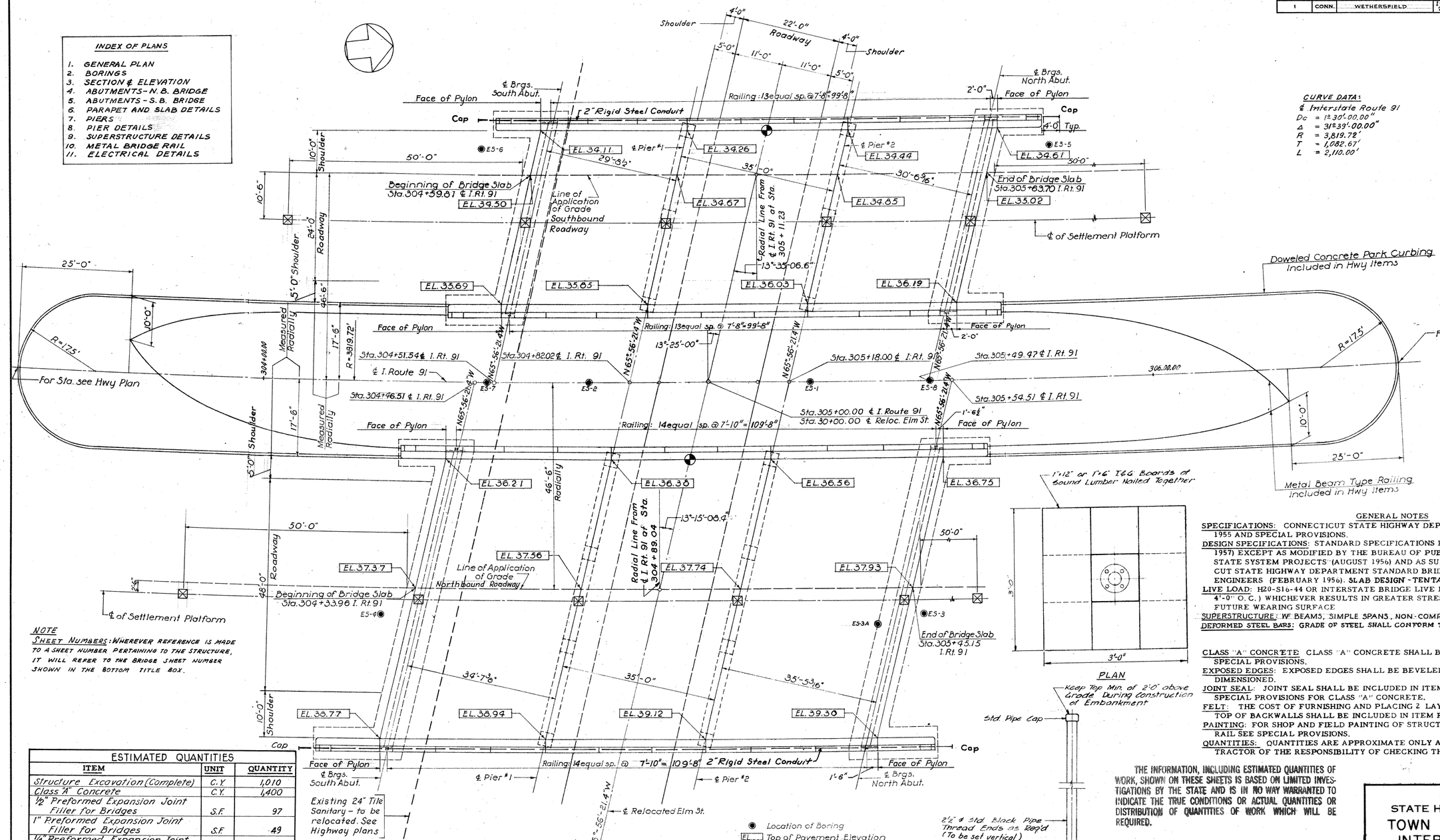

CURVE DATA:

℄ Interstate Route 91
Dc = 1°30'-00.00"
Δ = 31°39'-00.00"
R = 3,819.72'
T = 1,082.67'
L = 2,110.00'

NOTE

SHEET NUMBERS: WHEREVER REFERENCE IS MADE TO A SHEET NUMBER PERTAINING TO THE STRUCTURE, IT WILL REFER TO THE BRIDGE SHEET NUMBER SHOWN IN THE BOTTOM TITLE BOX.

ESTIMATED QUANTITIES

ITEM	UNIT	QUANTITY
Structure Excavation (Complete)	C.Y.	1,010
Class "A" Concrete	C.Y.	1,400
½" Preformed Expansion Joint Filler for Bridges	S.F.	97
1" Preformed Expansion Joint Filler for Bridges	S.F.	49
¼" Preformed Expansion Joint Filler for Bridges	S.F.	52
Neoprene Plate for Bridge Expansion Joint	L.F.	234
Deformed Steel Bars	LB.	212,300
Structural Steel	LB.	238,000
Dampproofing	S.Y.	240
Metal Bridge Rail	L.F.	432
Compacted Gravel Fill	C.Y.	3,750
Soil Loading Test	EA.	2
Pervious Structure Backfill	C.Y.	580
2" Rigid Steel Conduit (Bridge)	L.F.	279
Furnishing and Installing Settlement Platform	EA.	12
Crushed Stone for Slope Protection	Ton	430

Concrete Distribution

Superstructure	390	C.Y.
Substructure	506	C.Y.
Footings	504	C.Y.
Total	1,400	C.Y.

PLAN

Scale: 1/32" = 1'-0"

Notes:
1. For location of existing Elm Street see highway plan.
2. Pier footings not shown see sheets 7 & 8.
3. Railing to extend from face to face of pylons See Sh. 10
4. Hwy Drainage not shown. See Hwy Plans

● Location of Boring
EL. Top of Pavement Elevation
Point of minimum vertical clearance
Elevations are based on U.S.C. & G.S. Datum
☒ Settlement Platform
For detail of Rigid Steel Conduit See Sheet 11

PLAN

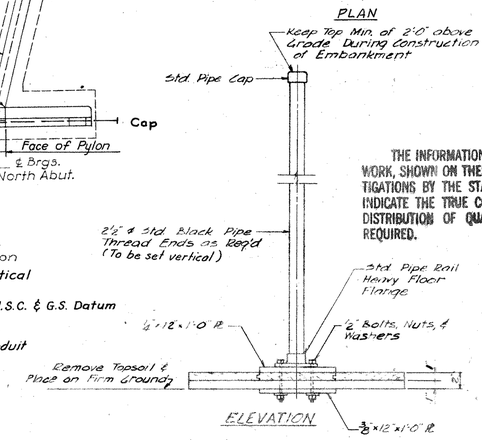

ELEVATION

DETAILS OF SETTLEMENT PLATFORM

Scale 1" = 1'-0"

GENERAL NOTES

SPECIFICATIONS: CONNECTICUT STATE HIGHWAY DEPARTMENT FORM 808 - JANUARY, 1955 AND SPECIAL PROVISIONS.

DESIGN SPECIFICATIONS: STANDARD SPECIFICATIONS FOR HIGHWAY BRIDGES (AASHO-1957) EXCEPT AS MODIFIED BY THE BUREAU OF PUBLIC ROADS "POLICY ON INTERSTATE SYSTEM PROJECTS" (AUGUST 1956) AND AS SUPPLEMENTED BY THE CONNECTICUT STATE HIGHWAY DEPARTMENT STANDARD BRIDGE DETAILS FOR CONTRACTING ENGINEERS (FEBRUARY 1956). SLAB DESIGN - TENTATIVE AASHO T-8 (59)

LIVE LOAD: H20-S16-44 OR INTERSTATE BRIDGE LIVE LOADING (24,000 LBS. DUAL AXLE, 4'-0" O.C.) WHICHEVER RESULTS IN GREATER STRESS, 25 LBS. PER SQUARE FOOT FOR FUTURE WEARING SURFACE

SUPERSTRUCTURE: W BEAMS, SIMPLE SPANS, NON-COMPOSITE.

DEFORMED STEEL BARS: GRADE OF STEEL SHALL CONFORM TO SPECIAL PROVISIONS.

CLASS "A" CONCRETE: CLASS "A" CONCRETE SHALL BE USED THROUGHOUT. SEE SPECIAL PROVISIONS.

EXPOSED EDGES: EXPOSED EDGES SHALL BE BEVELED 1"x1" UNLESS OTHERWISE DIMENSIONED.

JOINT SEAL: JOINT SEAL SHALL BE INCLUDED IN ITEM FOR CLASS "A" CONCRETE. SEE SPECIAL PROVISIONS FOR CLASS "A" CONCRETE.

FELT: THE COST OF FURNISHING AND PLACING 2 LAYERS OF 15 LB. ROOFING FELT ON TOP OF BACKWALLS SHALL BE INCLUDED IN ITEM FOR CLASS "A" CONCRETE.

PAINTING: FOR SHOP AND FIELD PAINTING OF STRUCTURAL STEEL AND METAL BRIDGE RAIL SEE SPECIAL PROVISIONS.

QUANTITIES: QUANTITIES ARE APPROXIMATE ONLY AND DO NOT RELIEVE THE CONTRACTOR OF THE RESPONSIBILITY OF CHECKING THEM IN PREPARING HIS BID.

THE INFORMATION, INCLUDING ESTIMATED QUANTITIES OF WORK, SHOWN ON THESE SHEETS IS BASED ON LIMITED INVESTIGATIONS BY THE STATE AND IS IN NO WAY WARRANTED TO INDICATE THE TRUE CONDITIONS OR ACTUAL QUANTITIES OR DISTRIBUTION OF QUANTITIES OF WORK WHICH WILL BE REQUIRED.

REVISIONS		
NO.	DATE	DESCRIPTION

CONNECTICUT
STATE HIGHWAY DEPARTMENT
TOWN OF WETHERSFIELD
INTERSTATE ROUTE 91
OVER
ELM STREET
GENERAL PLAN

DESIGNED BY LEONARD S. WEGMAN CO., CONTRACTING ENGINEER
SCALES As Shown
MADE BY L.E.K. DATE 10-11-60
CHECKED BY L.K. DATE 10-11-60
APPROVED [signature] DATE 10-11-60
PROJECT NO. 118-68
BRIDGE SHEET NO. 1 OF 11

TRIANGLE LITHO PRINT CO., INC. 82889

118 68

M250 01

FORM NO. ENG. 18 ED. 11-52

PUB. ROAD DIV. NO.	STATE	TOWN	FED. AID PROJ. NO.	PROJ. NO.	YEAR	ROUTE NO.	SHEET NO.	TOTAL SHEETS
1	CONN.	WETHERSFIELD	I-IG-91 2(3)31	118-68	1960	I-91	95	236

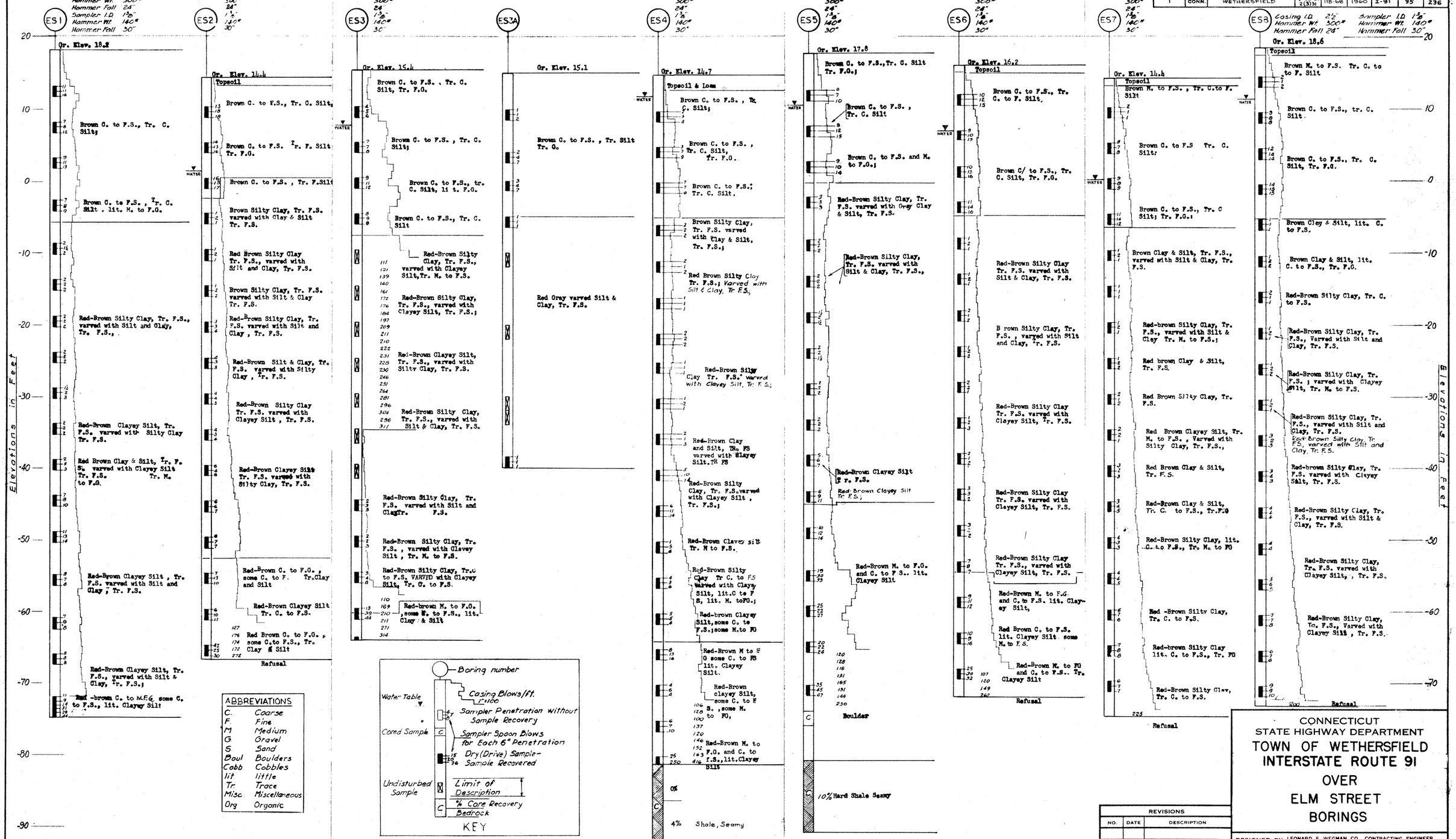

ABBREVIATIONS	
C.	Coarse
F.	Fine
M	Medium
G	Gravel
S	Sand
Boul	Boulders
Cobb	Cobbles
lit	little
Tr	Trace
Misc	Miscellaneous
Org	Organic

THE INFORMATION, INCLUDING ESTIMATED QUANTITIES OF WORK, SHOWN ON THESE SHEETS IS BASED ON LIMITED INVESTIGATIONS BY THE STATE AND IS IN NO WAY WARRANTED TO INDICATE THE TRUE CONDITIONS OR ACTUAL QUANTITIES OR DISTRIBUTION OF QUANTITIES OF WORK WHICH WILL BE REQUIRED.

REVISIONS		
NO.	DATE	DESCRIPTION

CONNECTICUT
STATE HIGHWAY DEPARTMENT
TOWN OF WETHERSFIELD
INTERSTATE ROUTE 91
OVER
ELM STREET
BORINGS

DESIGNED BY LEONARD S. WEGMAN CO., CONTRACTING ENGINEER
SCALES Vert. 1"=60", Horiz. 1"=100
MADE BY E.R.C. DATE 10-11-60
CHECKED BY L.K. DATE 10-11-60
APPROVED [signature] DATE 10-11-60
PROJECT NO. 118-68
BRIDGE SHEET NO. 2 OF 11

TRIANGLE LITHO PRINT CO., INC.

118 68

M250 01

95

FORM NO. ENG. 18 ED. 11-52

PUB. ROAD DIV. NO.	STATE	TOWN	FED. AID PROJ. NO.	PROJ. NO.	YEAR	ROUTE NO.	SHEET NO.	TOTAL SHEETS
1	CONN.	WETHERSFIELD	I-IG-91 (3)	118-68	1960	I-91	96	236

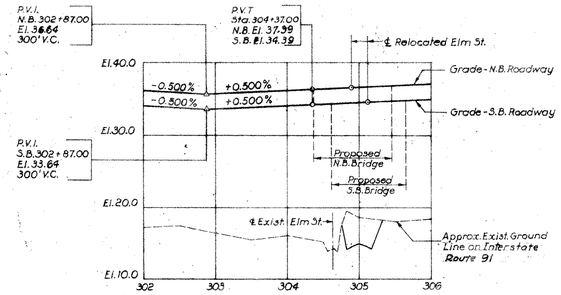

PROFILE ON CENTER LINE OF I. ROUTE 91

Scales: Horiz. 1" = 100'
Vert. 1" = 10'

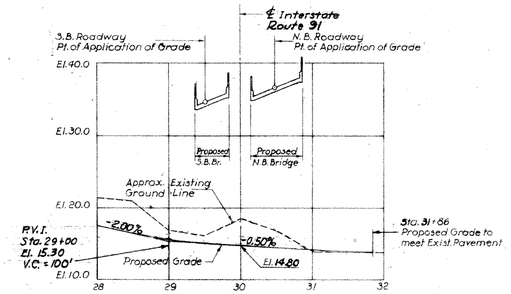

ELM STREET PROFILE

(RELOCATED)

Scales: Horiz. 1" = 100'
Vert. 1" = 10'

SOUTHBOUND BRIDGE—RADIAL SECTION

Scale: 3/16" = 1.0"

NOTE: Diaphragms not shown.

NORTHBOUND BRIDGE—RADIAL SECTION

Scale: 3/16" = 1'-0"

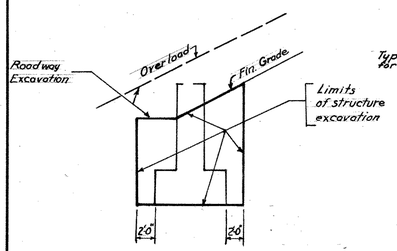

EXCAVATION LIMITS OF PIER

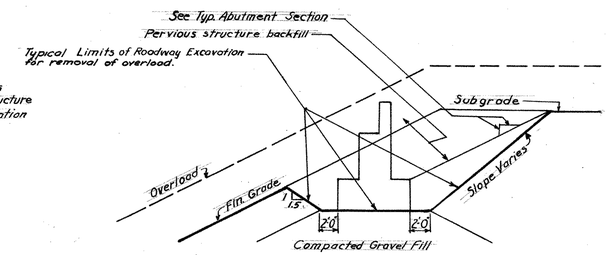

EXCAVATION LIMITS OF ABUTMENT

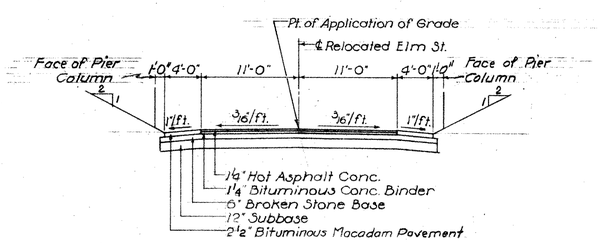

APPROACH SECTION-RELOCATED ELM STREET

Scale: 1/8" = 1'-0"

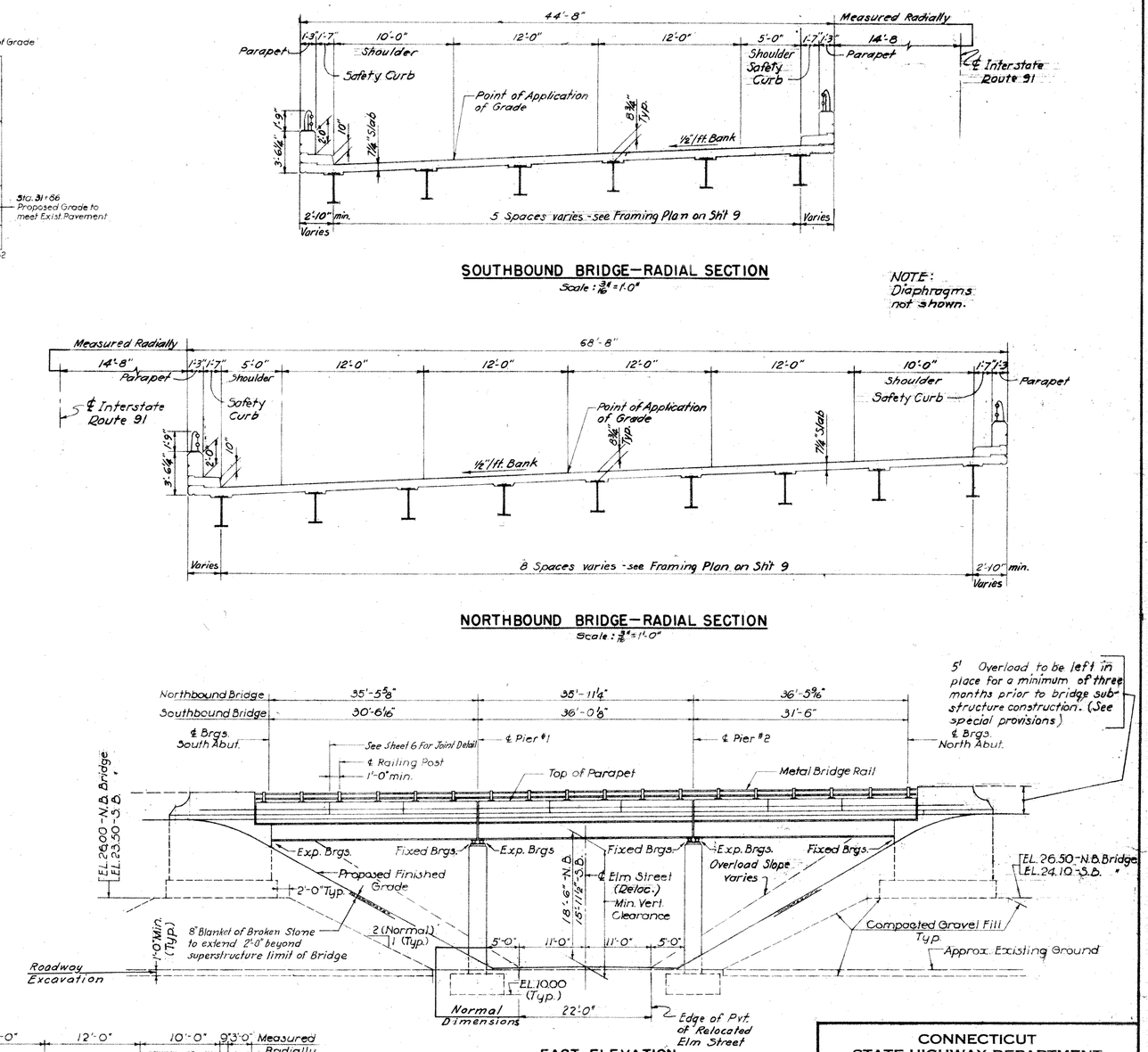

EAST ELEVATION

Scale: 3/32" = 1'-0"

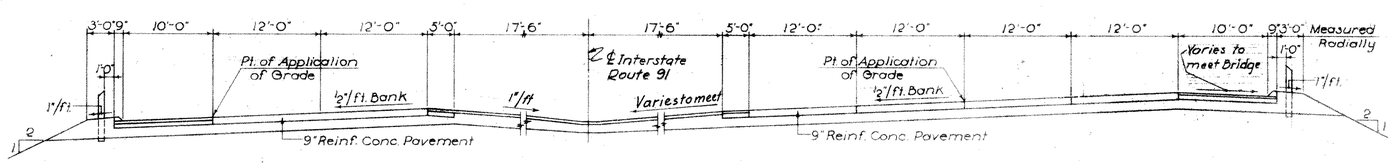

NORTH & SOUTH APPROACHES
SOUTHBOUND ROADWAY

NORTH & SOUTH APPROACHES
NORTHBOUND ROADWAY

INTERSTATE ROUTE 91 APPROACH SECTIONS

Scale: 1/8" = 1'-0"

THE INFORMATION, INCLUDING ESTIMATED QUANTITIES OF WORK, SHOWN ON THESE SHEETS IS BASED ON LIMITED INVESTIGATIONS BY THE STATE AND IS IN NO WAY WARRANTED TO INDICATE THE TRUE CONDITIONS OR ACTUAL QUANTITIES OR DISTRIBUTION OF QUANTITIES OF WORK WHICH WILL BE REQUIRED.

REVISIONS		
NO.	DATE	DESCRIPTION

CONNECTICUT
STATE HIGHWAY DEPARTMENT

TOWN OF WETHERSFIELD
INTERSTATE ROUTE 91
OVER
ELM STREET
SECTIONS & ELEVATION

DESIGNED BY LEONARD S. WEGMAN CO., CONTRACTING ENGINEER

SCALES As Shown		PROJECT NO. 118-68
MADE BY L.E.K.	DATE 10-11-60	
CHECKED BY L.E.	DATE 10-11-60	BRIDGE SHEET NO. 3 OF 11
APPROVED [illegible]	DATE 10-11-60	

FORM NO. ENG. 15 ED. 11-52

PUB. ROAD DIV. NO.	STATE	TOWN	FED. AID PROJ. NO.	PROJ. NO.	YEAR	ROUTE NO.	SHEET NO.	TOTAL SHEETS
1	CONN.	WETHERSFIELD	I-19-91 (3) 31	118-68	1960	I-91	97	236

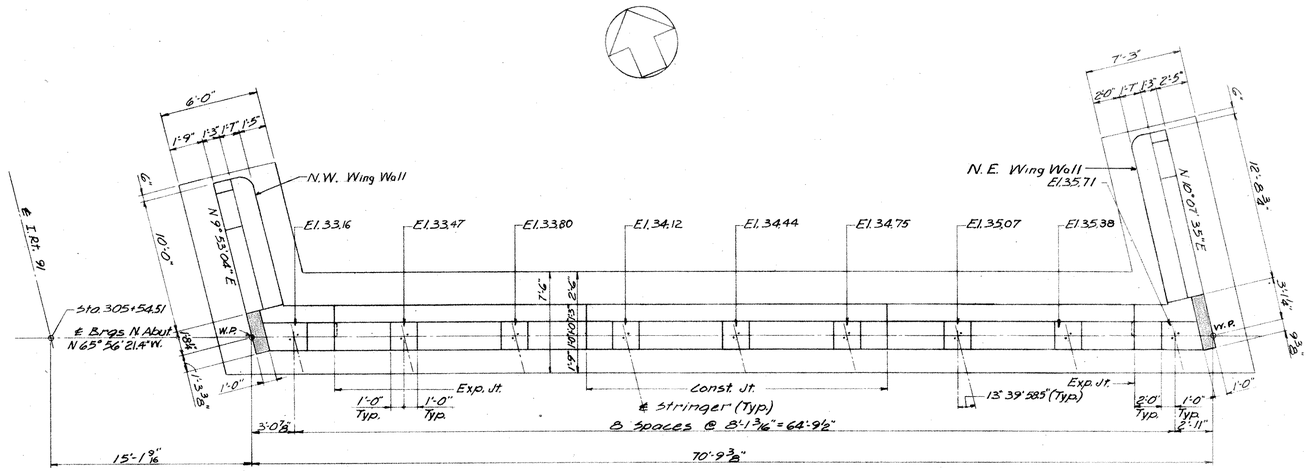

PLAN OF NORTH ABUTMENT

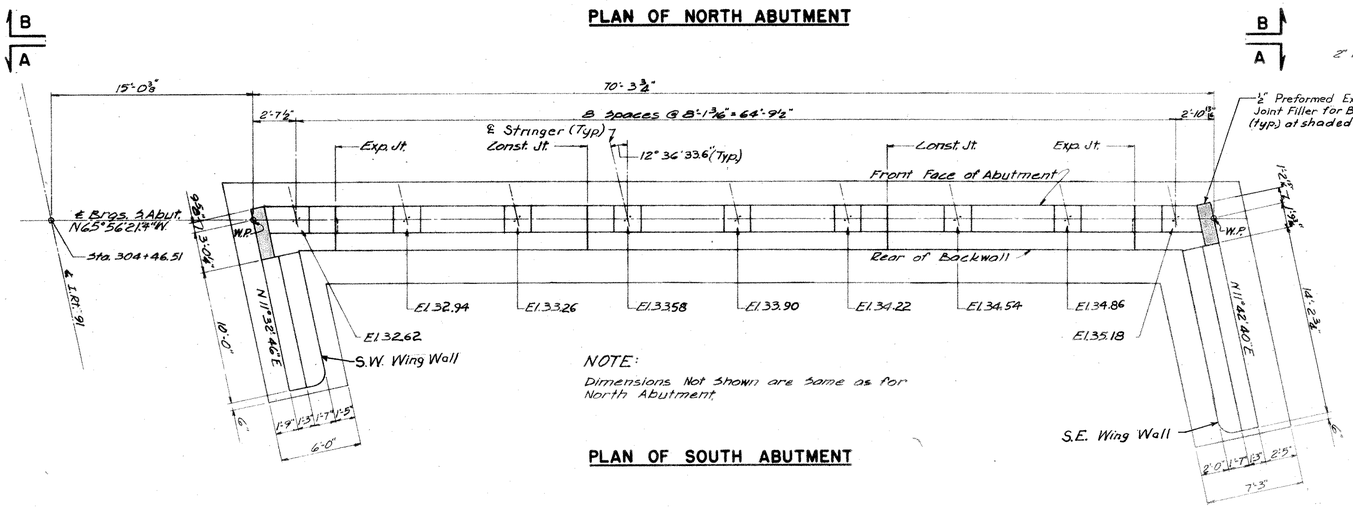

NOTE:
Dimensions Not Shown are Same as for North Abutment.

PLAN OF SOUTH ABUTMENT

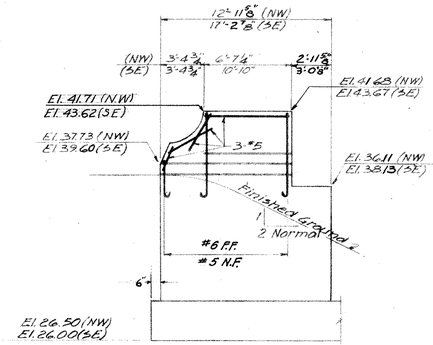

NORTHWEST & SOUTHEAST WING WALLS

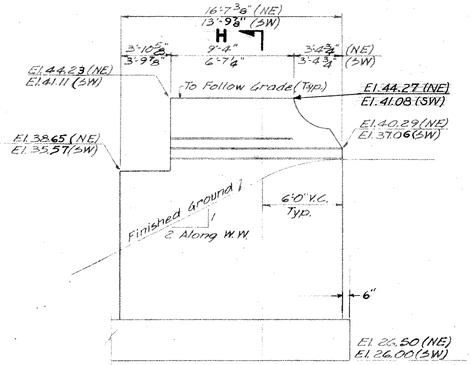

NORTHEAST & SOUTHWEST WING WALLS

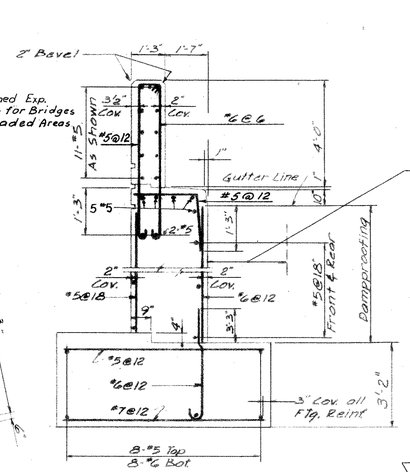

SECTION H-H
TYPICAL WING WALL SECTION
Scale 3/8" = 1'-0"

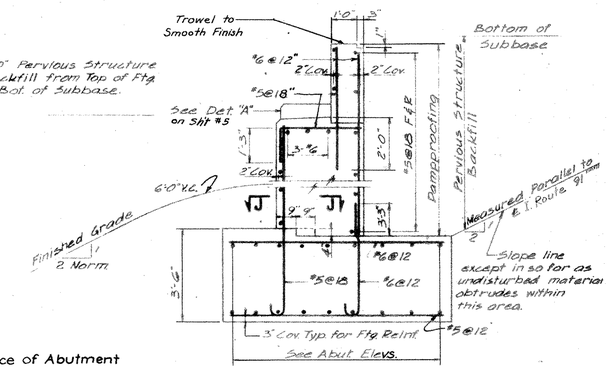

TYPICAL ABUTMENT SECTION
Scale 3/8" = 1'-0"

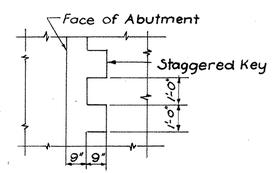

SECTION J - J
Scale: 3/8" = 1'-0"

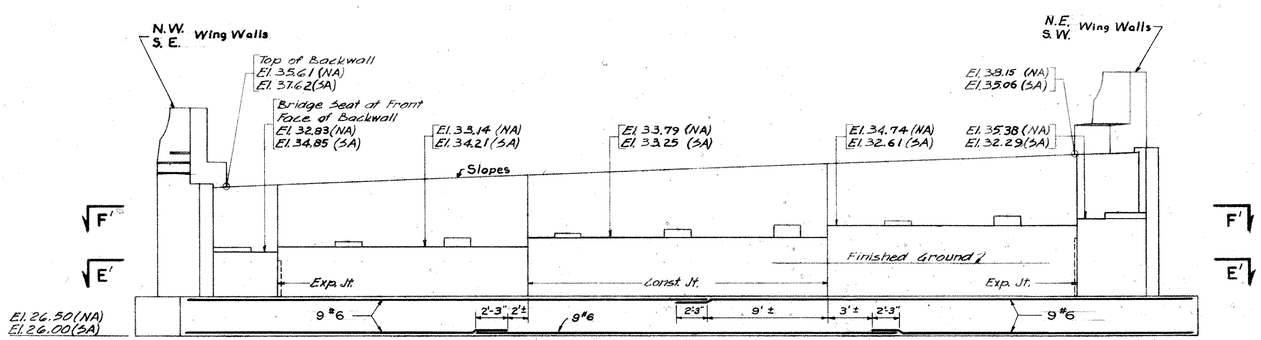

ELEVATION B-B (NORTH ABUTMENT)
ELEVATION A-A (SOUTH ABUTMENT) SIMILAR EXCEPT AS NOTED

Note: Only longitudinal footing reinforcement is shown. For transverse footing reinforcement see "Typical Abutment Section" on this sheet

REFERENCE NOTES:
For Sections E-E & F-F see Bridge Sheet No. 5.
For Details of Expansion & Construction Jts. see Bridge Sheet No. 6
See Sheet No. 8 for Substructure Notes.
For Anchor Bolt Detail see sh. 9

NOTE:
For Elevations of Bearing Pads see "Abutment Plans." Bearing Pad Elevations shown are at Bottom of Bearing Base Plates.

THE INFORMATION, INCLUDING ESTIMATED QUANTITIES OF WORK, SHOWN ON THESE SHEETS IS BASED ON LIMITED INVESTIGATIONS BY THE STATE AND IS IN NO WAY WARRANTED TO INDICATE THE TRUE CONDITIONS OR ACTUAL QUANTITIES OR DISTRIBUTION OF QUANTITIES OF WORK WHICH WILL BE REQUIRED.

REVISIONS		
NO.	DATE	DESCRIPTION

CONNECTICUT
STATE HIGHWAY DEPARTMENT
TOWN OF WETHERSFIELD
INTERSTATE ROUTE 91
OVER
ELM STREET
ABUTMENTS - N.B. BRIDGE

DESIGNED BY LEONARD S. WEGMAN CO., CONTRACTING ENGINEER
SCALES 3/16" = 1'-0" Except as noted
PROJECT NO. 118-68
MADE BY L.P. DATE 10-11-60
CHECKED BY L.K. DATE 10-11-60
APPROVED Herbert Wandelbaum DATE 10-11-60
BRIDGE SHEET NO. 4 OF 11

TRIANGLE LITHO PRINT CO., INC.

118 68

M250 01

FORM NO. ENG. 15 ED. 11-62

PUB. ROAD DIV. NO.	STATE	TOWN	FED. AID PROJ. NO.	PROJ. NO.	YEAR	ROUTE NO.	SHEET NO.	TOTAL SHEETS
1	CONN.	WETHERSFIELD	I-IG-91-2(3)31	118-68	1960	I-91	98	236

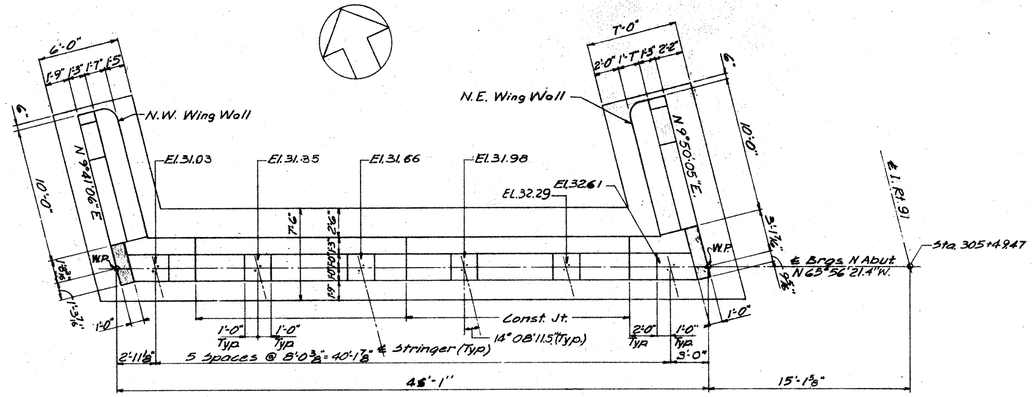

PLAN OF NORTH ABUTMENT

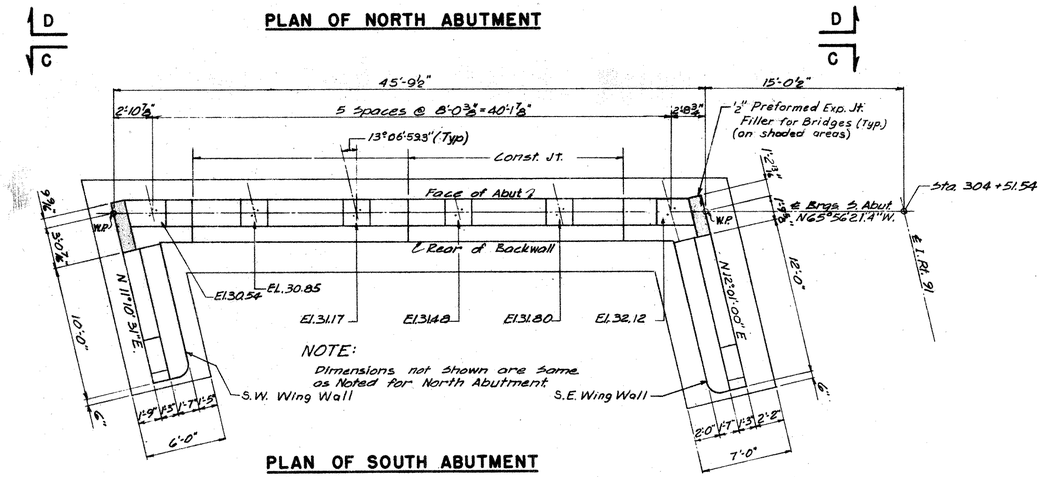

NOTE:
Dimensions not shown are same as Noted for North Abutment

PLAN OF SOUTH ABUTMENT

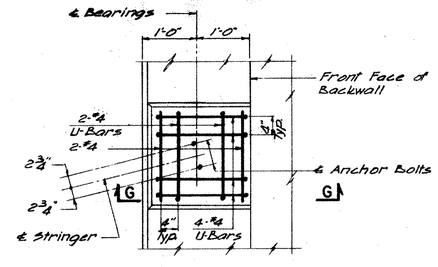

PLAN

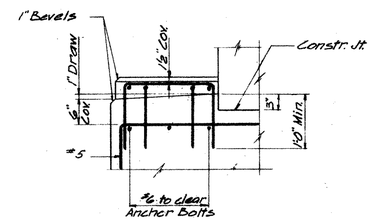

SECTION G-G

DETAIL "A"

BEARING PAD DETAIL

Scale 3/4" = 1'-0"

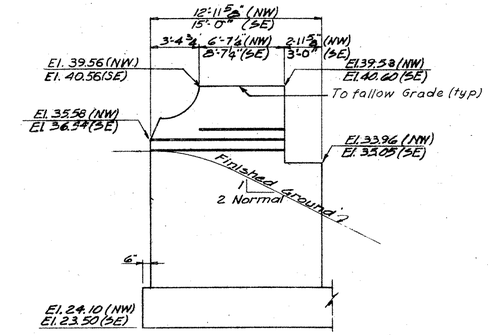

NORTHWEST & SOUTHEAST WING WALLS

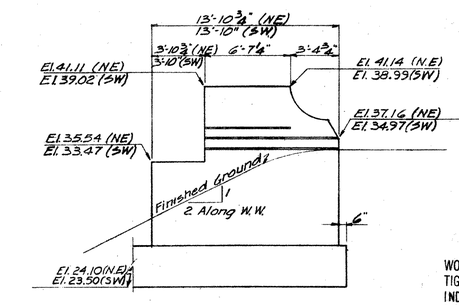

NORTHEAST & SOUTHWEST WING WALLS

REFERENCE NOTES:

For Typical Abutment and Wing Wall Sections and Detail of Pylon Reinforcement see Bridge Sheet No. 4.
See Reference Notes on Bridge Sheet No. 4.
For Anchor Bolt Detail see sh. 9

THE INFORMATION, INCLUDING ESTIMATED QUANTITIES OF WORK, SHOWN ON THESE SHEETS IS BASED ON LIMITED INVESTIGATIONS BY THE STATE AND IS IN NO WAY WARRANTED TO INDICATE THE TRUE CONDITIONS OR ACTUAL QUANTITIES OR DISTRIBUTION OF QUANTITIES OF WORK WHICH WILL BE REQUIRED.

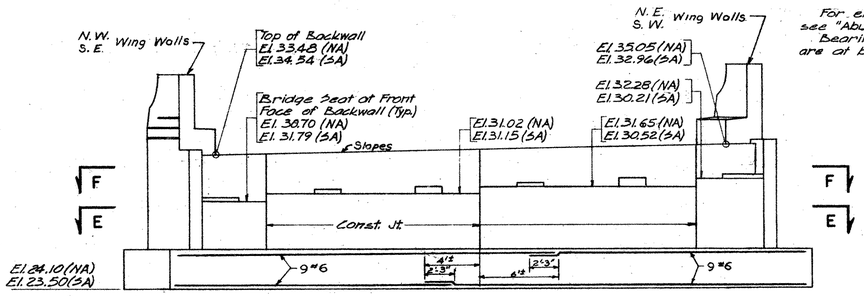

NOTE:
For elevations of bearing pads see "Abutment Plans"
Bearing pad elevations shown are at bottom of bearing base plates.

ELEVATION D-D (NORTH ABUTMENT)

ELEVATION C-C (SOUTH ABUTMENT) SIMILAR EXCEPT AS NOTED

Note: Only Longitudinal Footing Reinforcement is Shown. For Transverse Footing Reinforcement see "Typical Abutment Section" on Sheet No. 4.

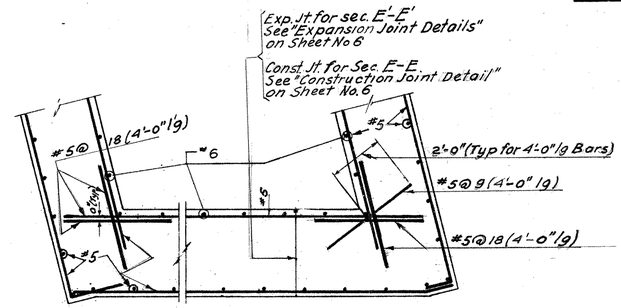

SECTION E-E

Scale 3/8" = 1'-0"
(Section E'-E' Similar except as noted)

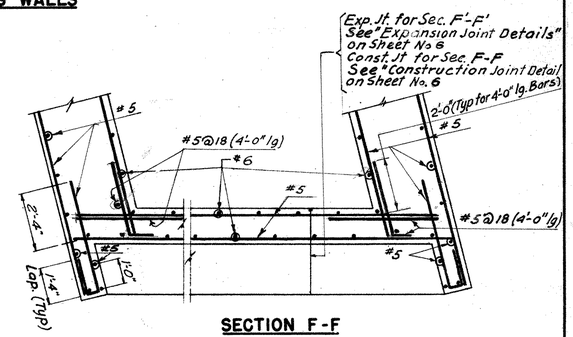

SECTION F-F

Scale 3/8" = 1'-0"
(Section F-F' Similar except as noted)

Note:
For a section through cheekwall see "Section at Abutment" Bridge Sheet No. 6

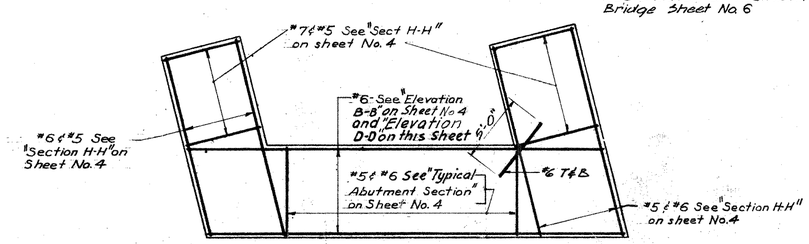

CORNER DETAILS FOR FOOTING REINFORCEMENT

Not To Scale

REVISIONS		
NO.	DATE	DESCRIPTION

CONNECTICUT
STATE HIGHWAY DEPARTMENT
TOWN OF WETHERSFIELD
INTERSTATE ROUTE 91
OVER
ELM STREET
ABUTMENTS-S.B. BRIDGE

DESIGNED BY LEONARD S. WEGMAN CO., CONTRACTING ENGINEER
SCALES 3/16" = 1'-0" EXCEPT AS NOTED
MADE BY L.P. DATE 10-11-60
CHECKED BY L.K. DATE 10-11-60
APPROVED Herbert Mandelbaum DATE 10-11-60
PROJECT NO. 118-68
BRIDGE SHEET NO. 5 OF 11

FORM NO. ENG. 15 ED. 11-52

FED. ROAD DIV. NO.	STATE	TOWN	FED. AID PROJ. NO.	PROJ. NO.	YEAR	ROUTE NO.	SHEET NO.	TOTAL SHEETS
1	CONN.	WETHERSFIELD	I-16-3(2)31	118-68	1960	I-91	99	236

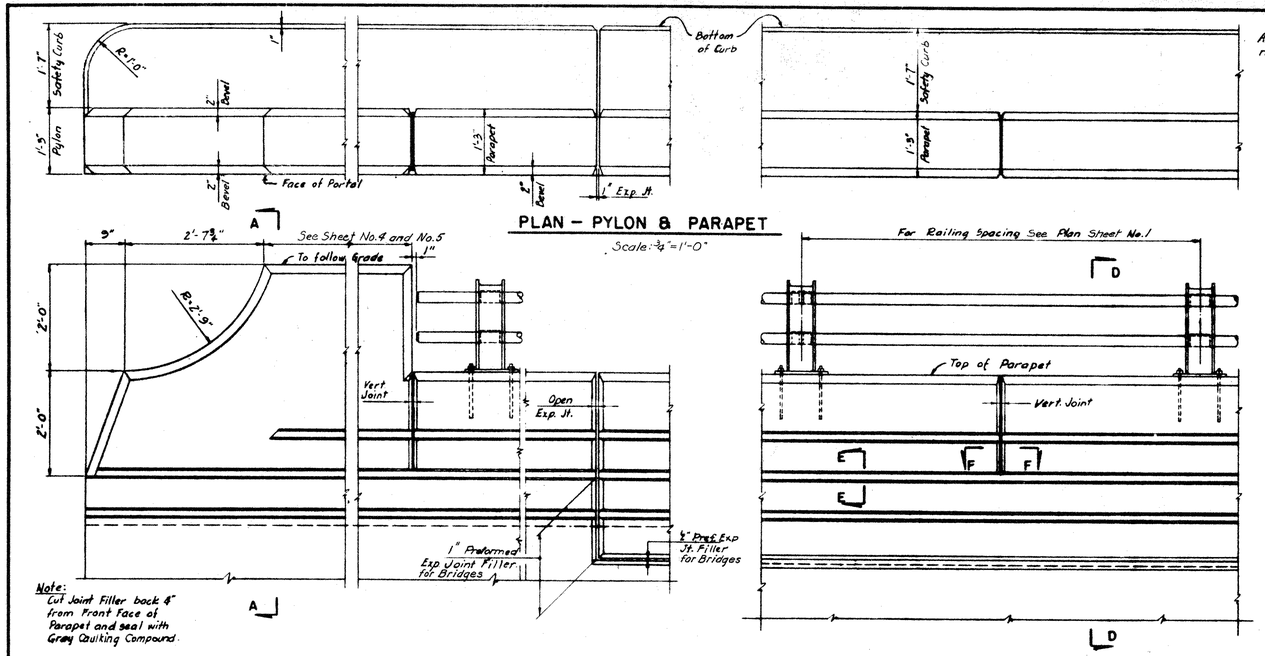

PLAN – PYLON & PARAPET

Scale: 3/4"=1'-0"

ELEVATION – PYLON, RAILING & PARAPET

Scale: 3/4"=1'-0"

After Joint Seal has been applied, vehicles will be prohibited from running directly on joint for a seven day period.

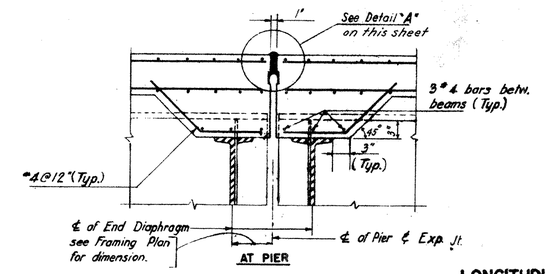

AT PIER

LONGITUDINAL SECTION

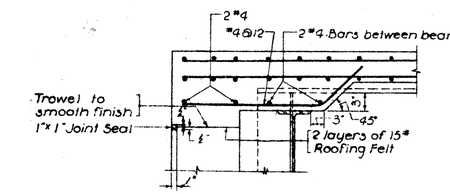

AT ABUTMENT

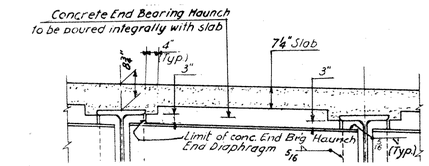

SLAB SECTION AT END DIAPHRAGM

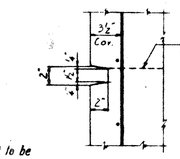

SECTION E-E

Scale: 1/2"=1'-0"

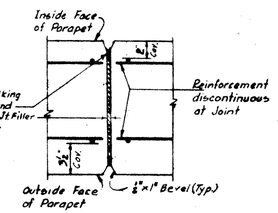

SECTION F-F

Joints to be located at center of alternate railing panels See Elevation, Bridge Sheet No.3

Scale: 1 1/2"=1'-0"

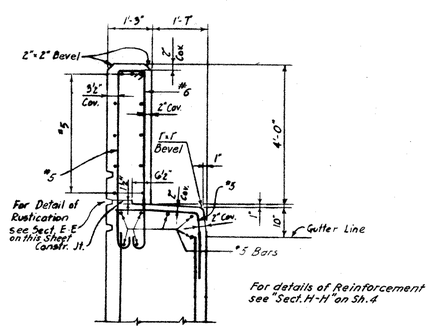

SECTION A-A

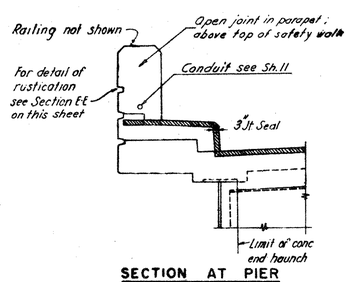

SECTION AT PIER

PARAPET & SAFETY CURB DETAILS

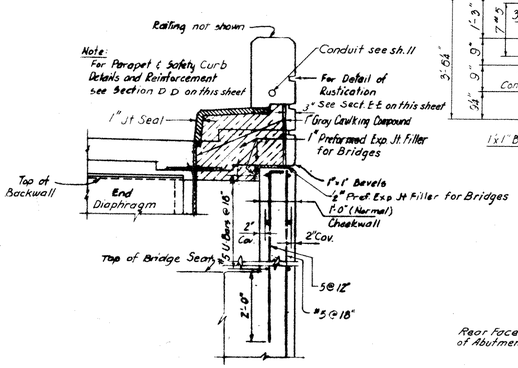

SECTION AT ABUTMENT

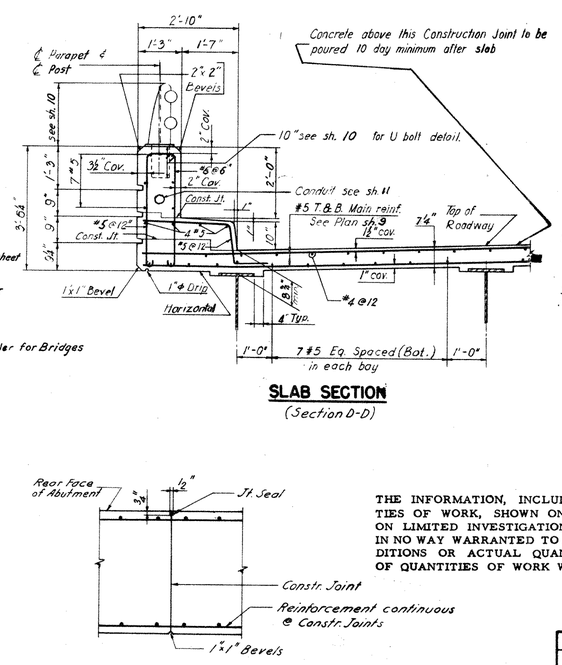

SLAB SECTION

(Section D-D)

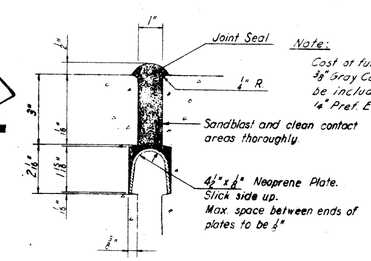

Note: Cost of furnishing and placing 3/8" Gray Caulking Compound to be included in Contract Item 1/4" Pref. Exp. Jt. Filler for Bridges

DETAIL "A"

Scale: 4"=1'-0"

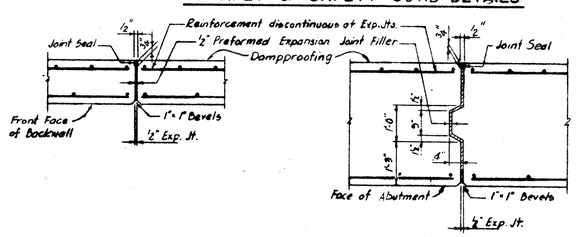

AT BACKWALL

AT ABUTMENT STEM

EXPANSION JOINT DETAILS

CONSTRUCTION JOINT DETAIL FOR ABUTMENTS

THE INFORMATION, INCLUDING ESTIMATED QUANTITIES OF WORK, SHOWN ON THESE SHEETS IS BASED ON LIMITED INVESTIGATIONS BY THE STATE AND IS IN NO WAY WARRANTED TO INDICATE THE TRUE CONDITIONS OR ACTUAL QUANTITIES OR DISTRIBUTION OF QUANTITIES OF WORK WHICH WILL BE REQUIRED.

REVISION		
NO.	DATE	DESCRIPTION

CONNECTICUT
STATE HIGHWAY DEPARTMENT
TOWN OF WETHERSFIELD
INTERSTATE ROUTE 91
OVER
ELM STREET
PARAPET & SLAB DETAILS

DESIGNED BY LEONARD S. WEGMAN CO. CONTRACTING ENGINEER

SCALES 1/2"=1'-0" except as noted — PROJECT NO. 118-68

MADE BY L.P. DATE 10-11-60

CHECKED BY L.K. DATE 10-11-60

APPROVED Walter Mancelka DATE 10-11-60 — BRIDGE SHEET NO. 6 OF 11

118 68

M250 01

99

FORM NO. ENG. 15 ED. 11-52

PUB. ROAD DIV. NO.	STATE	TOWN	FED. AID PROJ. NO.	PROJ. NO.	YEAR	ROUTE NO.	SHEET NO.	TOTAL SHEETS
1	CONN.	WETHERSFIELD	I-IG-91-2(33)	118-68	1960	I-91	100	236

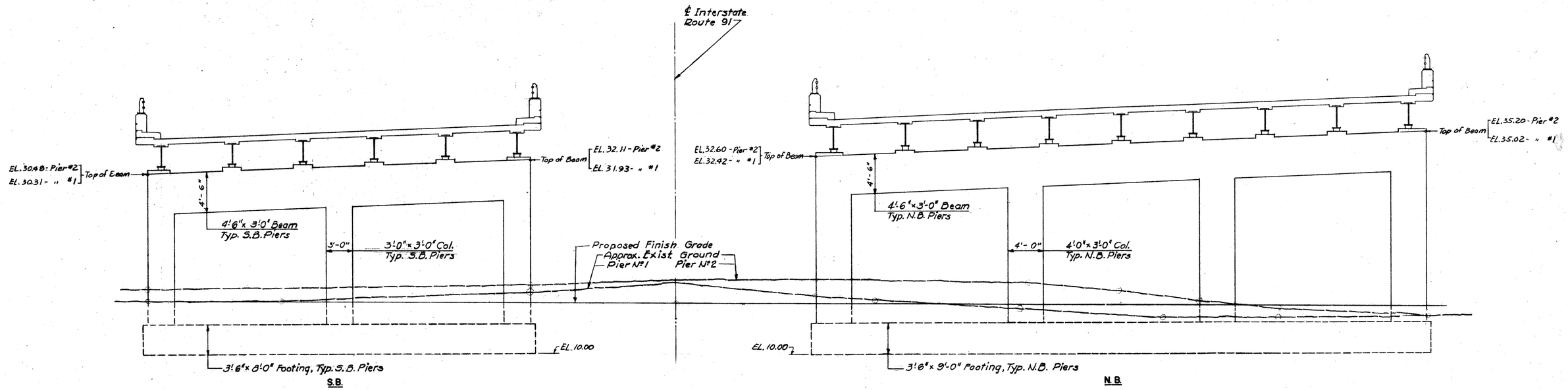

ELEVATION OF PIERS

Scale: 3/16" = 1'-0"

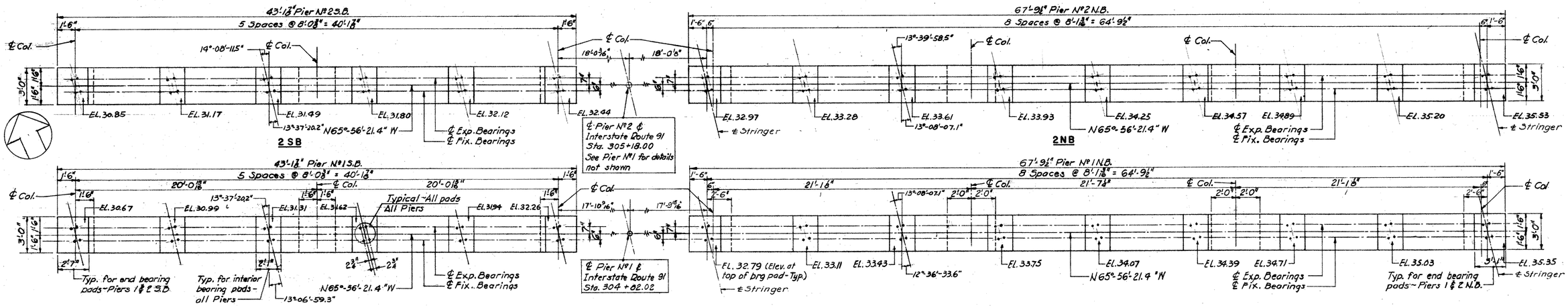

PLANS OF PIERS

Scale 1/4" = 1'-0"

Note:
For Substructure Notes see sh. 8
For Anchor Bolt Detail see sh. 9

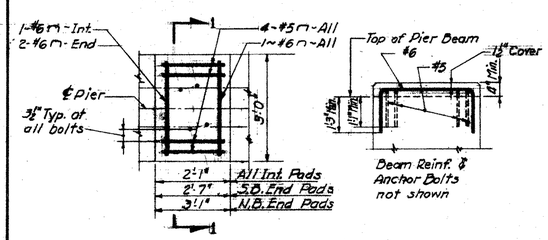

PLAN

SECTION I-I

BEARING PAD DETAIL

Scale 1/2" = 1'-0"

THE INFORMATION, INCLUDING ESTIMATED QUANTITIES OF WORK, SHOWN ON THESE SHEETS IS BASED ON LIMITED INVESTIGATIONS BY THE STATE AND IS IN NO WAY WARRANTED TO INDICATE THE TRUE CONDITIONS OR ACTUAL QUANTITIES OR DISTRIBUTION OF QUANTITIES OF WORK WHICH WILL BE REQUIRED.

REVISIONS		
NO.	DATE	DESCRIPTION

CONNECTICUT
STATE HIGHWAY DEPARTMENT

TOWN OF WETHERSFIELD
INTERSTATE ROUTE 91
OVER
ELM STREET
PIERS

DESIGNED BY LEONARD S. WEGMAN CO., CONTRACTING ENGINEER

SCALES As Noted
MADE BY L.P. DATE 10-11-60
CHECKED BY L.K. DATE 10-11-60
APPROVED [signature] DATE 10-11-60

PROJECT NO. 118-68

BRIDGE SHEET NO. 7 OF 11

TRIANGLE LITHO PRINT CO., INC.

118 68

M 250 01

100

FORM NO. ENG. 18 ED. 11-58

PUB. ROAD DIV. NO.	STATE	TOWN	FED. AID PROJ. NO.	PROJ. NO.	YEAR	ROUTE NO.	SHEET NO.	TOTAL SHEETS
1	CONN.	WETHERSFIELD	I-95-1 2(3)31	118-68	1960	I-91	101	236

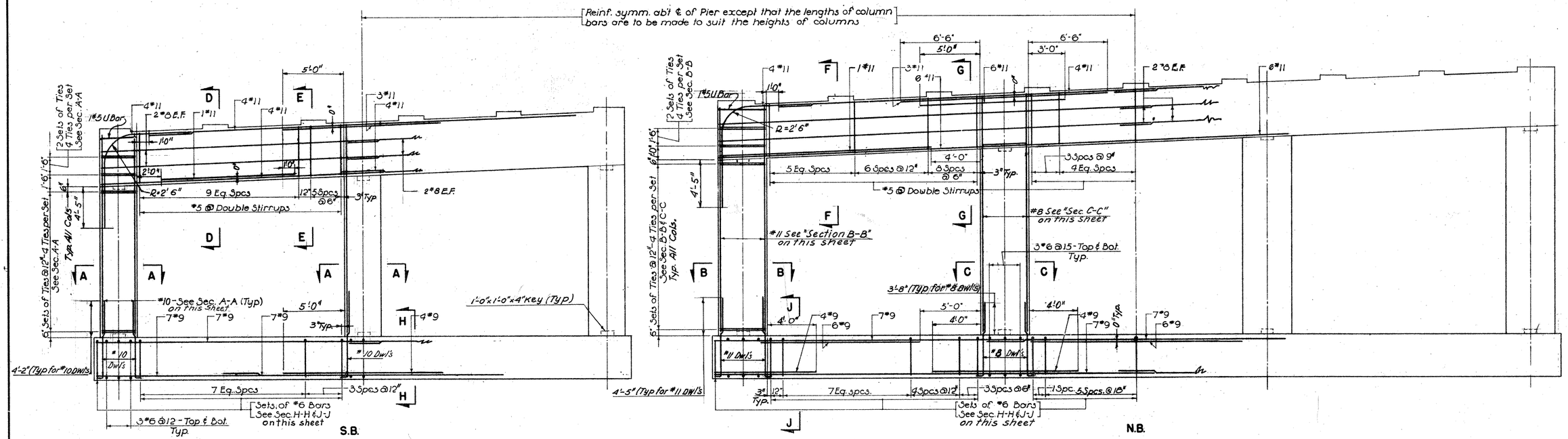

ELEVATION OF PIERS

Scale: 1/4" = 1'-0"

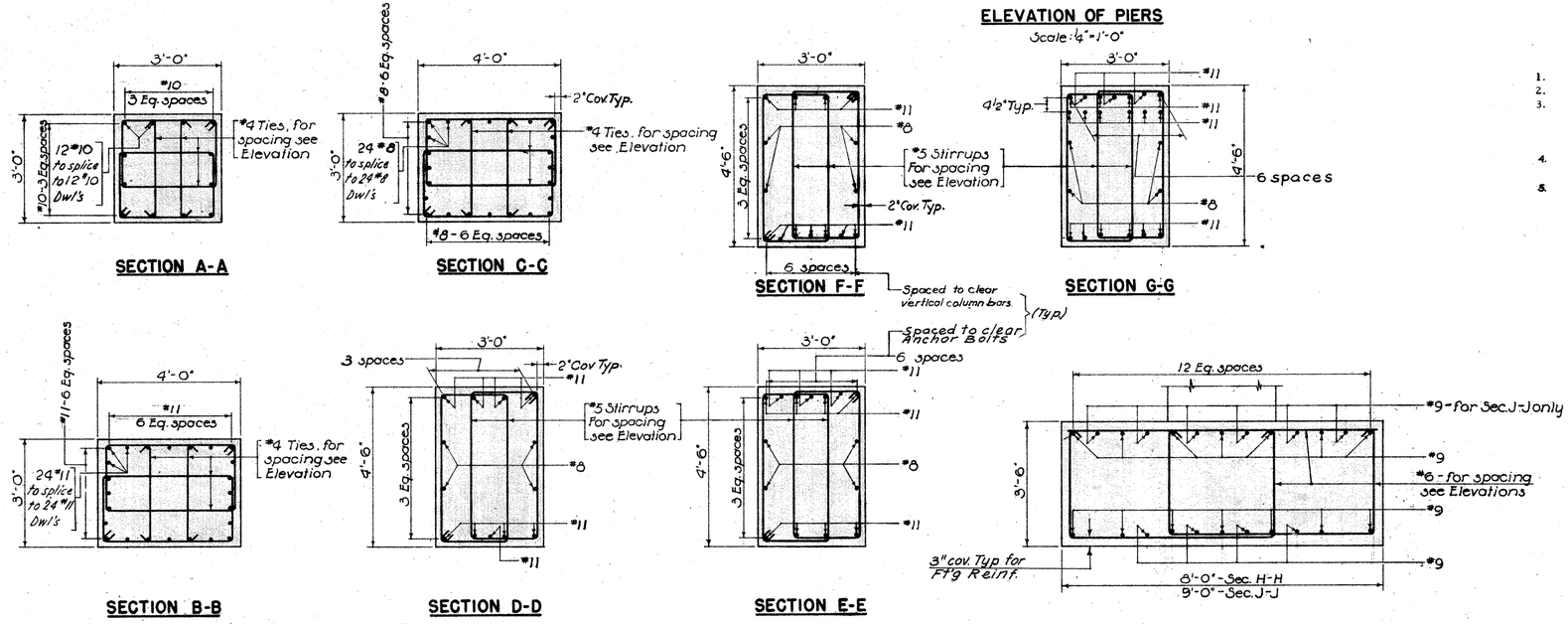

NOTE: Pier reinforcement to clear Bearing Anchor Bolts

SUBSTRUCTURE NOTES

1. MAXIMUM DESIGN BEARING PRESSURE FOR ABUT. FTGS. IS 1.8 T./S.F., FOR PIER FTGS. 1.9 T./S.F.
2. FOR DETAILS OF ANCHOR BOLTS SEE SHEET NO. 9
3. THE BEARING PAD ELEVATIONS SHOWN ON PLANS OF PIERS AND ABUTMENTS ARE THE ELEVATIONS OF THE BOTTOMS OF BASE PLATES.
4. COST OF FURNISHING AND PLACING CAULKING COMPOUND FOR JOINT FILLERS TO BE INCLUDED IN THE ITEMS FOR JOINT FILLERS FOR BRIDGES.
5. UNLESS OTHERWISE NOTED, THE SPLICE OF MAIN REINFORCEMENT SHALL BE 35 BAR DIAMETERS. DISTRIBUTION AND TEMPERATURE REINFORCEMENT - 20 DIAMETERS. NO REINFORCING STEEL IS TO BE PASSED THROUGH EXPANSION JOINTS. JOINT SEAL FOR ABUTMENTS TO BE EXTENDED FROM TOP OF FOOTING TO TOP OF BACKWALL. FOR EXTENT OF JOINT SEAL IN WING WALL SEE DETAILS.

THE INFORMATION, INCLUDING ESTIMATED QUANTITIES OF WORK, SHOWN ON THESE SHEETS IS BASED ON LIMITED INVESTIGATIONS BY THE STATE AND IS IN NO WAY WARRANTED TO INDICATE THE TRUE CONDITIONS OR ACTUAL QUANTITIES OR DISTRIBUTION OF QUANTITIES OF WORK WHICH WILL BE REQUIRED.

CONNECTICUT
STATE HIGHWAY DEPARTMENT
TOWN OF WETHERSFIELD
INTERSTATE ROUTE 91
OVER
ELM STREET
PIER DETAILS

REVISIONS		
NO.	DATE	DESCRIPTION

DESIGNED BY LEONARD S. WEGMAN CO., CONTRACTING ENGINEER
SCALES 1/4" = 1'-0" Except as Noted
MADE BY L.P. DATE 10-11-60
CHECKED BY L.K. DATE 10-11-60
APPROVED [signature] DATE 10-11-60
PROJECT NO. 118-68
BRIDGE SHEET NO. 8 OF 11

FORM NO. ENG. 15 ED. 11-32

PUB. ROAD DIV. NO.	STATE	TOWN	FED. AID PROJ. NO.	PROJ. NO.	YEAR	ROUTE NO.	SHEET NO.	TOTAL SHEETS
1	CONN.	WETHERSFIELD	I-10-91-2(3)31	118-68	1960	I-91	102	236

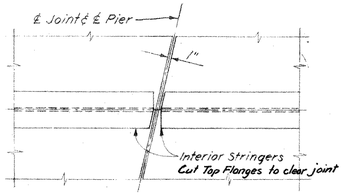

PLAN OF STRINGERS AT PIER

Scale: 1/2" = 1'-0"

NOTES:

1. All dimensions shown on framing plan are horizontal dimensions.
2. Unless otherwise noted, the splices of main reinforcement shall be 20 bar diameters, distribution and temperature reinforcement 20 diameters. No reinforcing steel is to be passed through expansion joints.
3. All steel for stringers, diaphragms and bearings (except bearing base plates) shall conform to ASTM A7 unless otherwise noted.

BEARING NOTES:

1. Mayari-R, Cor-ten or approved equivalent shall be used for all bearing base plates.
2. Payment for all material used in Bearings shall be made at the unit price for structural steel.
3. Nuts of anchor bolts for bearings shall be tightened in accordance with the following procedure:
   (a) Draw the lower nut up finger tight and back off 1/8 turn.
   (b) Draw the upper nut tight on the lower nut (do not tighten the lower nut.)
   (c) Burr off the threads of anchor bolt at face of upper nut with a pointed tool.
4. Self lubricating bronze plate shall have drilled in or trepanned recesses on the top and bottom surfaces.
5. Anchor bolts of bearings to be set at center of the slot at 50°F.
6. The 1'-6" long portion of bottom flange of Girder at each end to be truly at right angles to web.

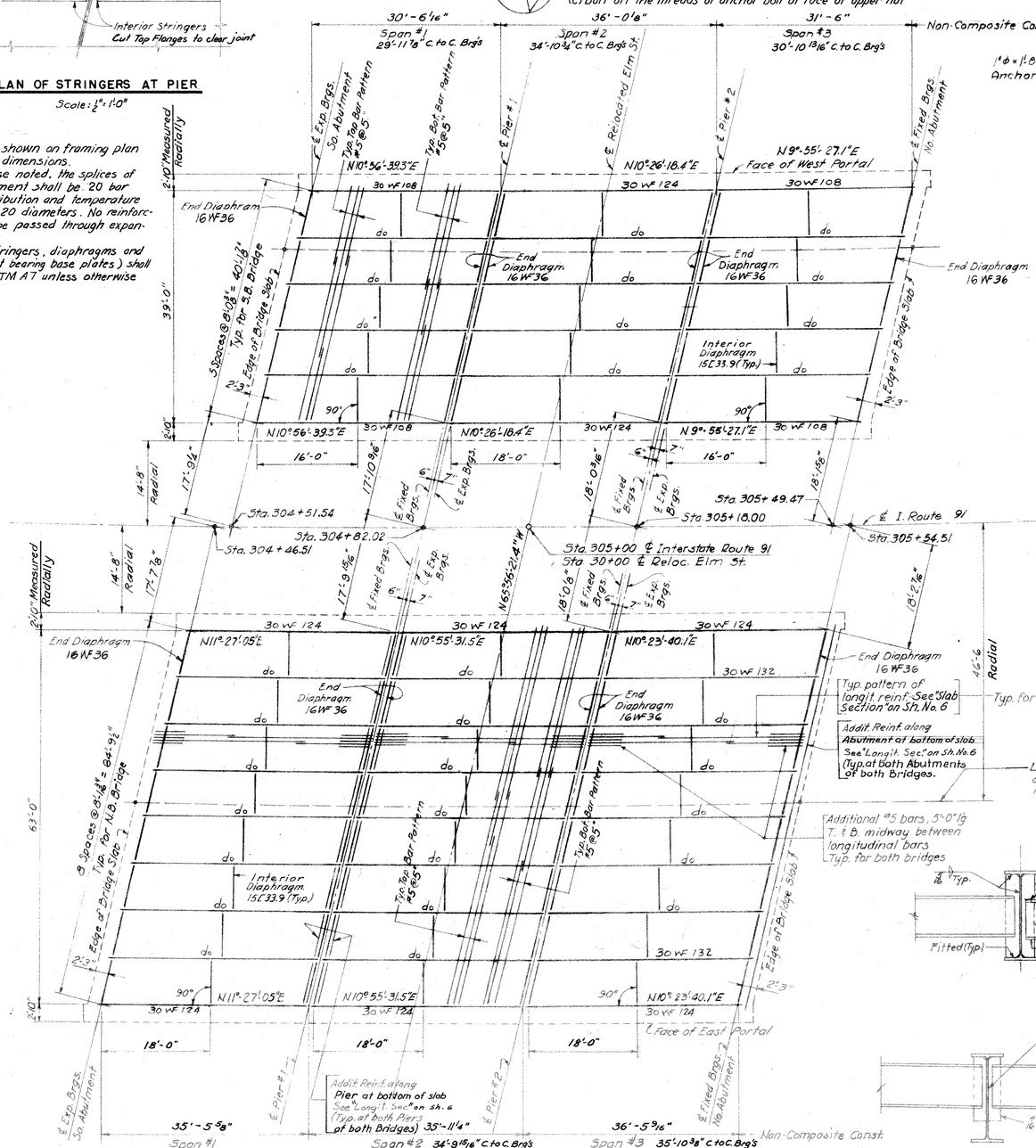

FRAMING PLAN & SLAB REINFORCEMENT DETAILS

Scale: 3/32" = 1'-0"

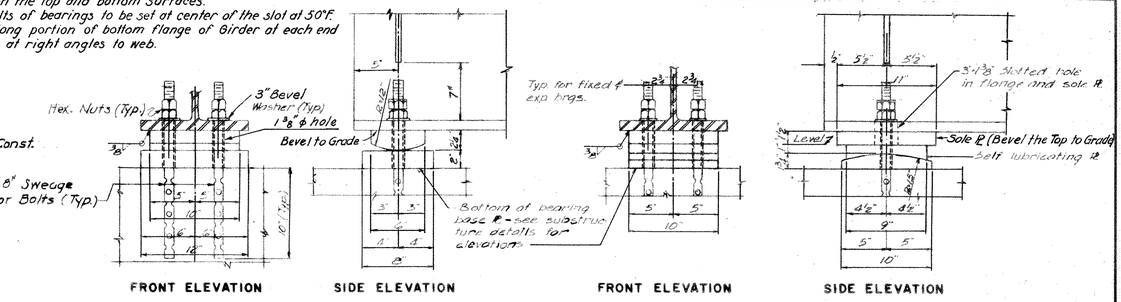

FIXED BEARINGS — **EXPANSION BEARINGS**

BEARING DETAILS

Scale: 1 1/2" = 1'-0"

CAMBER OF STRINGER					
Stringer	Deflection (in)				Total Camber (in)
	Steel D. L.	Deck Slab	Curb & Parapet	Future Wearing Surface	
30WF108	0	1/8	1/16	0	3/16
30WF124	1/16	3/16	0	1/16	5/16
30WF132	1/16	3/16	0	1/16	5/16

All beams shall be heat cambered in the shop to the total camber given in the tables, after all shop welding has been completed.

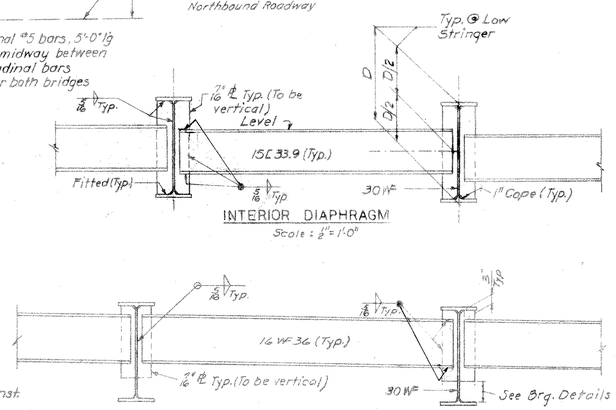

01456
01457

THE INFORMATION, INCLUDING ESTIMATED QUANTITIES OF WORK, SHOWN ON THESE SHEETS IS BASED ON LIMITED INVESTIGATIONS BY THE STATE AND IS IN NO WAY WARRANTED TO INDICATE THE TRUE CONDITIONS OR ACTUAL QUANTITIES OR DISTRIBUTION OF QUANTITIES OF WORK WHICH WILL BE REQUIRED.

CONNECTICUT
STATE HIGHWAY DEPARTMENT
TOWN OF WETHERSFIELD
INTERSTATE ROUTE 91
OVER
ELM STREET
SUPERSTRUCTURE DETAILS

REVISIONS		
NO.	DATE	DESCRIPTION

DESIGNED BY LEONARD S. WEGMAN CO., CONTRACTING ENGINEER

SCALES As Shown — PROJECT NO. 118-68

MADE BY L.E.K. DATE 10-11-60

CHECKED BY L.K. DATE 10-11-60 — BRIDGE SHEET NO. 9 OF 11

APPROVED [signature] DATE 10-11-60

TRIANGLE LITHO PRINT CO., INC.

PUB. ROAD DIV. No.	STATE	TOWN	FED. AID PROJ. No.	PROJ. No.	YEAR	ROUTE No.	SHEET No.	TOTAL SHEETS
1	CONN.	WETHERSFIELD	I-78-3 1 2(313)	118-68	1960	I-91	103	236

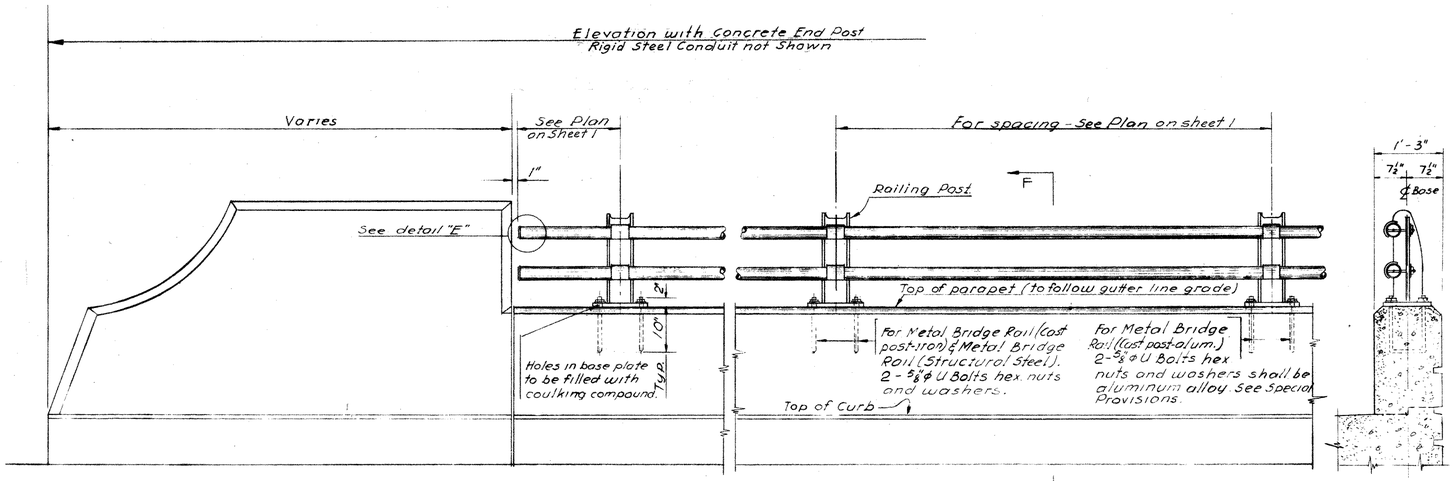

ELEVATION

CONC. END POST AND RAIL
Scale 3/4" = 1'-0"

SECTION FF
Scale 3/4" = 1'-0"

METAL BRIDGE RAIL
(STRUCTURAL STEEL)

All posts to be 6WF20 Structural steel post.
All rails to be 2½"ϕ Standard Steel Pipe.
Railing posts shall be vertical.
If necessary shim with lead wool and coulk. Cost to be included in item Metal Bridge Rail (Structural Steel)
For painting see Special Provisions.
All posts and base plates to be of Structural Steel conforming to A.S.T.M. A-7

METAL BRIDGE RAIL
(CAST POST-IRON)

All posts to be Malleable Iron Casting conforming to A.S.T.M. A-47 Grade 35018 or Ductile Iron Casting conforming to A.S.T.M. A-339
All rails to be 2½"ϕ Standard Steel Pipe
Railing posts shall be vertical.
If necessary shim with lead wool and coulk. Cost to be included in item Metal Bridge Rail (Cast post-iron)
For painting see Special Provisions.

METAL BRIDGE RAIL
(CAST POST-ALUMINUM)

All posts to be Cast of aluminum See Special Provisions.
All rails to be 3" o.d. x 2.625" i.d. Aluminum Tubing See Special Provisions.
Railing posts shall be vertical.
If necessary shim with aluminum sheets and coulk
Cost to be included in item Metal Bridge Rail (cast post-alum.)
Aluminum railing and posts shall not be painted.

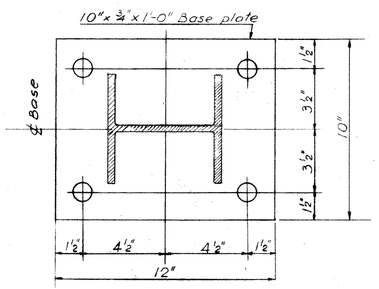

SECTION BB
Scale 3" = 1'-0"

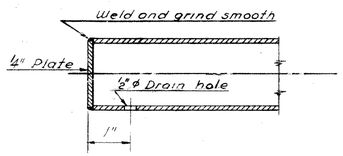

DETAIL "E"
Not to scale

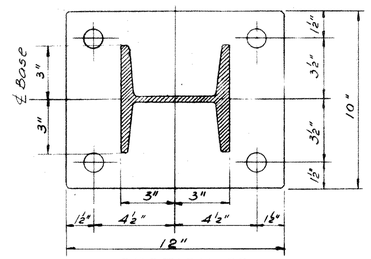

SECTION CC
Scale 3" = 1'-0"

GENERAL NOTES:

Unless otherwise specified on the plans or in the Special Provisions Metal Bridge Rail may be:
Metal Bridge Rail (Structural Steel) Metal Bridge Rail (cast post-iron) or Metal Bridge Rail - (Cast post-aluminum)
Cost of furnishing and setting
5/8"ϕ U bolts, hex, nuts and washers to be included Item "Metal Bridge Rail"

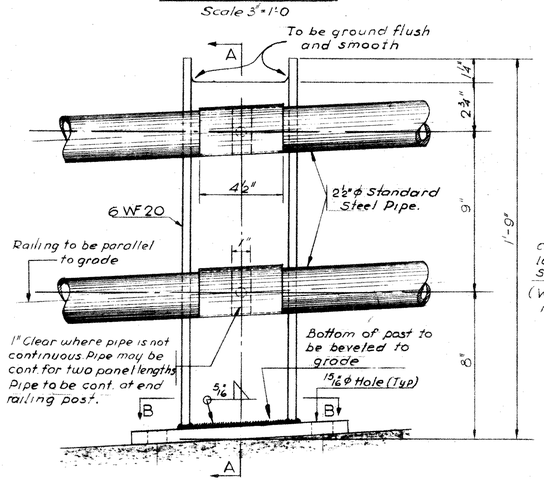

ELEVATION OF POST
Scale 3" = 1'-0"

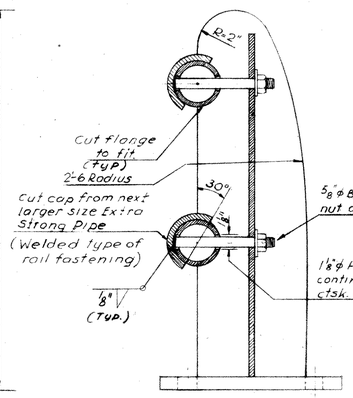

SECTION AA
Scale 3" = 1'-0"

DETAILS
STRUCTURAL STEEL POST
For Metal Bridge Rail (Structural-Steel)

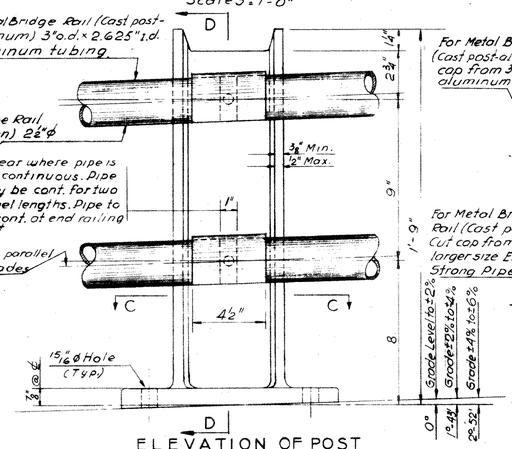

D
ELEVATION OF POST
Scale 3" = 1'-0"

NOTE

Details of Metal Bridge Railing and Fastening similar to details shown for Metal Bridge Railing (Structural Steel)

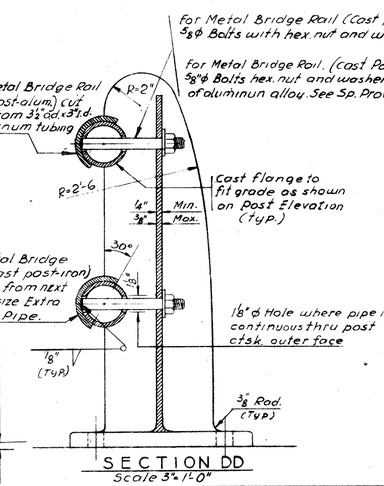

SECTION DD
Scale 3" = 1'-0"

DETAILS
CAST POST
for Metal Bridge Rail (Cast post-iron) and for Metal Bridge Rail (Cast post-aluminum)

THE INFORMATION, INCLUDING ESTIMATED QUANTITIES OF WORK, SHOWN ON THESE SHEETS IS BASED ON LIMITED INVESTIGATIONS BY THE STATE AND IS IN NO WAY WARRANTED TO INDICATE THE TRUE CONDITIONS OR ACTUAL QUANTITIES OR DISTRIBUTION OF QUANTITIES OF WORK WHICH WILL BE REQUIRED.

REVISIONS		
No	DATE	DESCRIPTION

CONNECTICUT
STATE HIGHWAY DEPARTMENT
TOWN OF WETHERSFIELD
INTERSTATE ROUTE 91
OVER
ELM STREET
METAL BRIDGE RAIL

DESIGNED BY C.H.D.
SCALES As noted
MADE BY G.M.K. DATE 3/4/59
CHECKED BY C.L.L. DATE 3/4/59
APPROVED [signature] DATE 3/6/59

PROJECT No. 118-68
BRIDGE SHEET No. 10 OF 11

FORM NO. ENG. 15 ED. 11-52

PUB. ROAD DIV. NO.	STATE	TOWN	FED. AID PROJ. NO.	PROJ. NO.	YEAR	ROUTE NO.	SHEET NO.	TOTAL SHEETS
1	CONN.	WETHERSFIELD	I-19-91 (23)31	118-68	1960	I-91	104	236

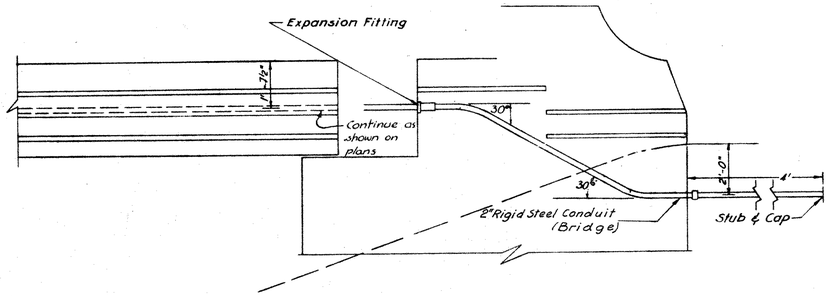

CONDUIT LOCATION AT WINGWALL

Scale: ⅜" = 1'-0"

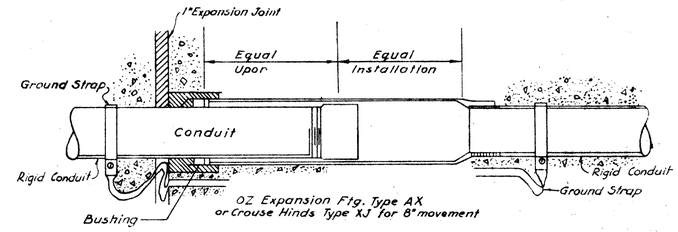

DETAIL OF EXPANSION FITTING

N.T.S.

Provide an Expansion Fitting at all Expansion Joints

NOTE

1. Manufacturer's catalogue references given herein indicate acceptable standards and their mention is not intended to preclude the use of products of other manufacture having the same characteristics.

THE INFORMATION, INCLUDING ESTIMATED QUANTITIES OF WORK, SHOWN ON THESE SHEETS IS BASED ON LIMITED INVESTIGATIONS BY THE STATE AND IS IN NO WAY WARRANTED TO INDICATE THE TRUE CONDITIONS OR ACTUAL QUANTITIES OR DISTRIBUTION OF QUANTITIES OF WORK WHICH WILL BE REQUIRED.

CONNECTICUT
STATE HIGHWAY DEPARTMENT

TOWN OF WETHERSFIELD
INTERSTATE ROUTE 91
OVER
ELM STREET
ELECTRICAL DETAILS

REVISIONS		
NO.	DATE	DESCRIPTION

DESIGNED BY LEONARD S. WEGMAN CO., CONTRACTING ENGINEER

SCALES As NOTED

MADE BY L.E.K. DATE 10-11-60

CHECKED BY L.K. DATE 10-11-60

APPROVED [signature] DATE 10-11-60

PROJECT NO. 118-68

BRIDGE SHEET NO. 11 OF 11

TRIANGLE LITHO PRINT CO., INC. 22890

118 68

M 250 01

STATE OF CONNECTICUT - DEPT. OF TRANSPORTATION

FORM NO ENG 15A ED 4-80

F.H.W.A. REGION	STATE	TOWN	FED. AID PROJ. NO.	PROJ. NO.	YEAR	ROUTE NO.	SHEET NO.	TOTAL SHEETS
1	CONN.	WETHERSFIELD	FAP F-7(1107)	159-164	1991	I-91/3	104	219

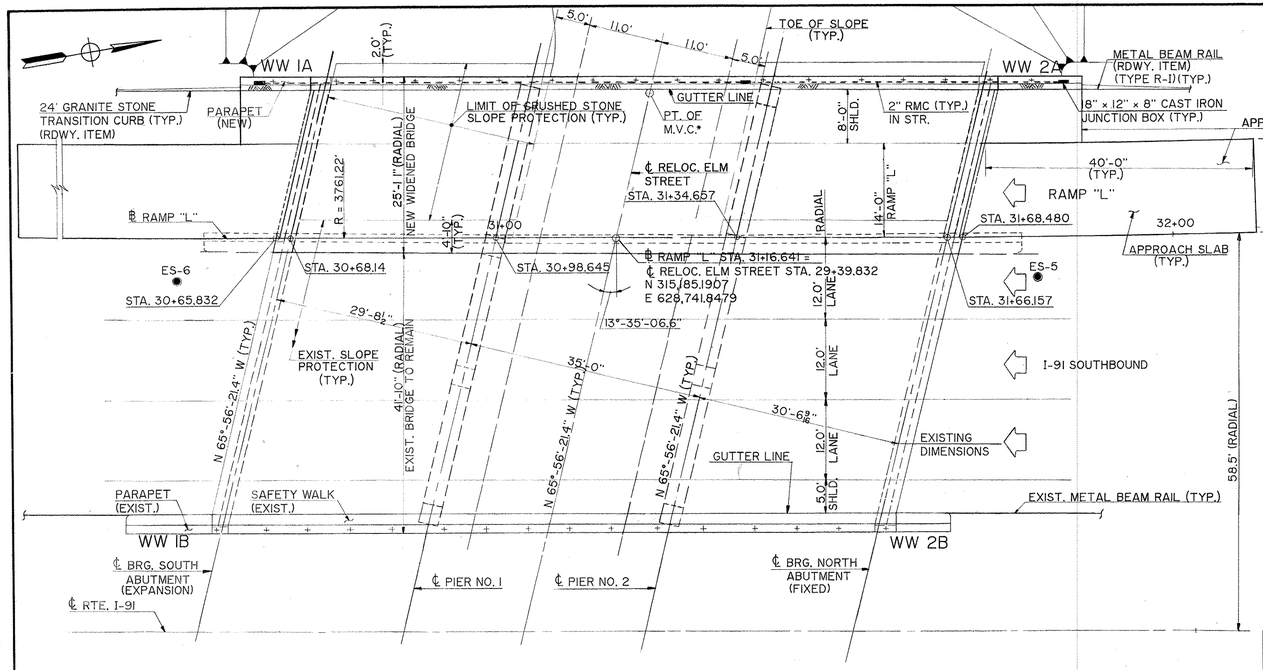

● LOCATION OF PREVIOUS BORING UNDER PROJECT 118-68.

◐ LOCATION OF NEW BORING (SHOWN ON THE PLAN FOR TOE OF SLOPE)

PLAN

SCALE : 3/32" = 1'-0"

* M.V.C. DENOTES MINIMUM VERTICAL CLEARANCE

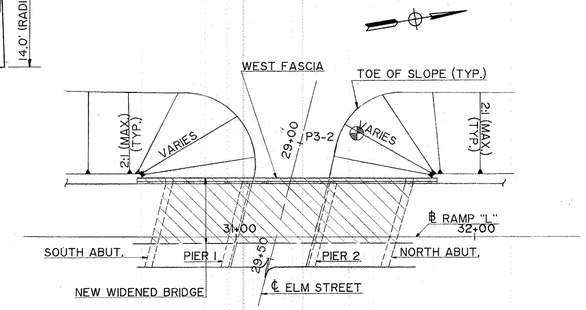

PLAN - TOE OF SLOPE

SCALE : 1" = 30'

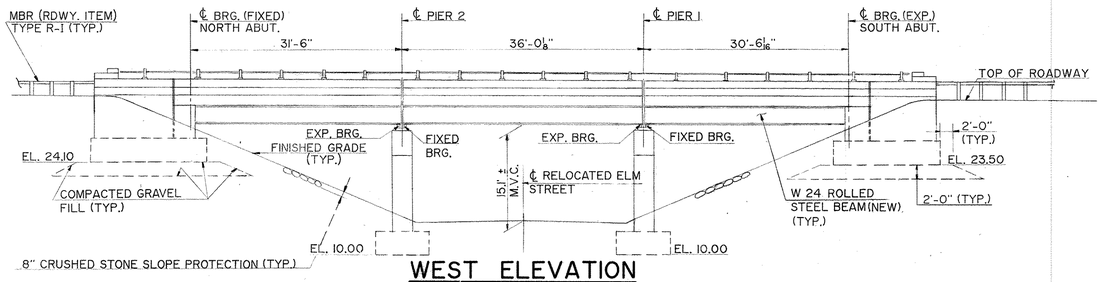

WEST ELEVATION

SCALE : 3/32" = 1'-0"

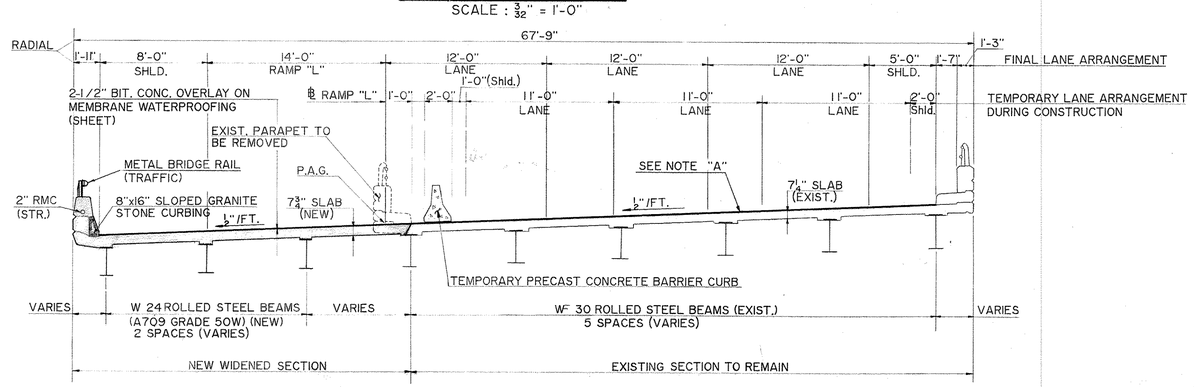

TYPICAL CROSS SECTION

SCALE : 3/16" = 1'-0"

NOTE "A": THE CONTRACTOR SHALL REMOVE THE EXISTING BITUMINOUS WEARING SURFACE AND PATCH THE EXISTING CONCRETE DECK USING PARTIAL DEPTH PATCH OR FULL DEPTH PATCH AS REQUIRED. THE CONTRACTOR SHALL THEN INSTALL 2-1/2" BITUMINOUS CONCRETE OVERLAY OVER MEMBRANE WATERPROOFING (SHEET).

NOTICE TO BRIDGE INSPECTORS

THE DEPARTMENT'S BRIDGE SAFETY PROCEDURES REQUIRE THIS BRIDGE TO BE INSPECTED FOR, BUT NOT LIMITED TO, ALL APPROPRIATE COMPONENTS INDICATED IN THE GOVERNING MANUALS FOR BRIDGE INSPECTION. ATTENTION MUST BE GIVEN TO INSPECTING THE FOLLOWING SPECIAL COMPONENTS AND DETAILS. (THE LISTING OF COMPONENTS FOR SPECIAL ATTENTION SHALL NOT BE CONSTRUED TO REDUCE THE IMPORTANCE OF INSPECTION OF ANY OTHER COMPONENT OF THE STRUCTURE.) THE FREQUENCY OF INSPECTION OF THIS STRUCTURE SHALL BE IN ACCORDANCE WITH THE GOVERNING MANUALS FOR BRIDGE INSPECTION, UNLESS OTHERWISE DIRECTED BY THE ENGINEER OF BRIDGES AND STRUCTURES.

COMPONENT OR DETAIL	BRIDGE SHEET REFERENCE
ELASTOMERIC BEARINGS	13 OF 21

CONCRETE DISTRIBUTION

LOCATION	UNIT	QUANTITY
SUPERSTRUCTURE	C. Y.	80
SUBSTRUCTURE	C. Y.	95
FOOTINGS	C. Y.	130
TOTAL	C. Y.	305

INSPECTION OF FIELD WELDS

METHOD	UNIT	QUANTITY
ULTRASONIC	IN.	0
MAG. PARTICLE	L. F.	0

EXISTING CONDITION NOTE

DIMENSIONS OF THE EXISTING STRUCTURE SHOWN ON THESE PLANS ARE FOR GENERAL REFERENCE ONLY. THEY HAVE BEEN TAKEN FROM THE ORIGINAL DESIGN DRAWINGS AND ARE NOT GUARANTEED. THE CONTRACTOR SHALL TAKE ALL FIELD MEASUREMENTS NECESSARY TO ASSURE PROPER FIT OF THE FINISHED WORK AND SHALL ASSUME RESPONSIBILITY FOR THEIR ACCURACY. WHEN SHOP DRAWINGS BASED ON FIELD MEASUREMENTS ARE SUBMITTED FOR APPROVAL, THE FIELD MEASUREMENTS SHALL ALSO BE SUBMITTED FOR REFERENCE BY THE REVIEWER.

STATE OF CONNECTICUT FRANK G. CHUANG NO. 8813 REGISTERED PROFESSIONAL ENGINEER

Chuang

THIS SHEET NOT CORRECTED

THE INFORMATION, INCLUDING ESTIMATED QUANTITIES OF WORK SHOWN ON THESE SHEETS IS BASED ON LIMITED INVESTIGATIONS BY THE STATE AND IS IN NO WAY WARRANTED TO INDICATE THE TRUE CONDITIONS OR ACTUAL QUANTITIES OR DISTRIBUTION OF QUANTITIES OF WORK WHICH WILL BE REQUIRED.

NO.	DATE	DESCRIPTION

REVISIONS

GENERAL NOTES

SPECIFICATIONS: Connecticut Department of Transportation Form 814 (1988) Interim Specifications and Special Provisions.

DESIGN SPECIFICATIONS: Standard Specifications for the Highway Bridges (AASHTO-1989) as supplemented by the Connecticut Department of Transportation Bridge Manual (1985).

ALLOWABLE DESIGN STRESSES:
Class "A" Concrete — Based on f'c = 3,000 psi
Class "F" Concrete — Based on f'c = 4,000 psi
Reinforcement (ASTM A615 Grade 60) — fs = 24,000 psi
Structural Steel (ASTM A709 Grade 50W) — Ft = 27,000 psi — Thicknesses to 4" incl.
Class "S" Concrete — Based on f'c = 3,000 psi

LIVE LOAD: HS 20-44 24,000 # dual axles at 4'-0" o.c.

FUTURE PAVING ALLOWANCE: None

REMAIN-IN-PLACE FORMS: The use of remain-in-place forms on this structure is not allowed.

CLASS "A" CONCRETE: Class "A" Concrete shall be used for the substructure and the parapets of U-Type Wings.

CLASS "F" CONCRETE: Class "F" Concrete shall be used for new bridge deck including parapet.

JOINT SEAL: See Special Provisions.

PARAFFIN: The cost of furnishing and applying paraffin is included in the item Class "F" Concrete.

EXPOSED EDGES: Exposed edges of concrete shall be beveled 1"x1" unless dimensioned otherwise.

STRUCTURAL STEEL: See Structure Sheet Number 12 of 21 for ASTM designations.

REINFORCEMENT: All reinforcement shall be ASTM A615 Grade 60.

EPOXY COATED REINFORCING BARS: All reinforcement in the new superstructure including the concrete deck and the parapets shall be epoxy coated unless otherwise noted. All reinforcement in the piers including the dowels extending out of the footing shall be epoxy coated. These bars shall be included in the pay item for, "Deformed Steel Bars (Epoxy Coated)." All reinforcement in the top mat of the concrete approach slabs including those in the headers shall be epoxy coated. These bars are rdwy. items and shall be included in the item, "Deformed Steel Bars (Epoxy Coated)."

PAINT: Painting of new structural steel shall conform to the requirements of the special provision, "Structural Steel Bridge No. 01457." The color of the topcoat material on the structural steel shall conform to Federal Standard Color No. 23522 [Approximately the Department's Standard Bridge Color No. 803 (TAN).]

FELT: The cost of furnishing and placing 15# felt is included in the item for "Class "A" Concrete".

BITUMINOUS CONCRETE OVERLAY: This shall consist of two lifts. The first shall be Bituminous Concrete - Class (12) (1" thick) and the second shall be Bituminous Concrete - Class (1) (1-1/2" thick).

FOUNDATION PRESSURES AND PILE LOADS: The various Group Loadings noted on the substructure plan sheets refer to the Group Loads as given in the AASHTO Standard Specifications for Highway Bridges.

CONSTRUCTION JOINTS: Construction joints, other than those shown on the plans, will not be permitted without the prior approval of the Engineer.

DECIMAL DIMENSIONS: When dimensions are given to less than three decimal places, the omitted digits shall be assumed to be zeros.

CLASS "S" CONCRETE: Class "S" Concrete shall be used for all substructure repairs wherever applicable.

EXISTING DIMENSIONS: Dimensions of the existing structure shown on these plans are for for general reference only. They have been taken from the original design drawings and are not guaranteed. The contractor shall take all field measurements necessary to assure proper fit of the finished work and shall assume full responsiblity for their accuracy. When shop drawings based on field measurements are submitted for approval, the field measurements shall also be submitted for reference by the reviewer.

PROTECTIVE COMPOUND FOR BRIDGES: Protective compound for bridges shall be applied on all exposed surfaces of substructure units (new and exist.), on exist. parapet and new parapet as indicated on the plans.

STATE OF CONNECTICUT
DEPARTMENT OF TRANSPORTATION

WETHERSFIELD

MODERNIZATION OF ROUTES I-91/3 INTERCHANGE
WIDENING OF I - 91 SOUTHBOUND OVER ELM STREET

GENERAL PLAN

ENGINEER H.W. LOCHNER, INC., BY L-C ASSOCIATES, INC.
DESIGNER A.M.P. | DRAFTER A.M.P. | CHECKER D.L.
APPROVED Frank G. Chuang | DATE 10/27/89
STRUCTURE NO. 159-164-5 | BRIDGE LOG NO. 01457 | STRUCTURE SHEET NO. 1 OF 21

JOSEPH MERRITT & CO. 137628

159-164 449-01 104

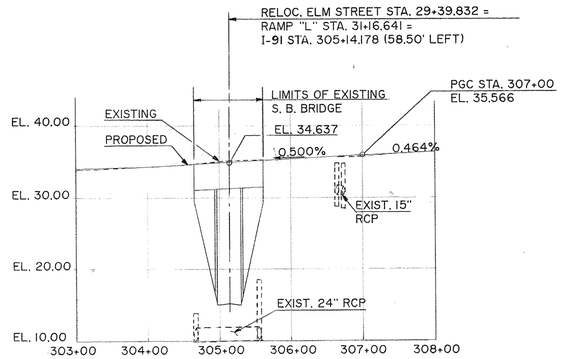

PROFILE I - 91 S. B.

SCALE: VERTICAL 1" = 10'
HORIZONTAL 1" = 100'

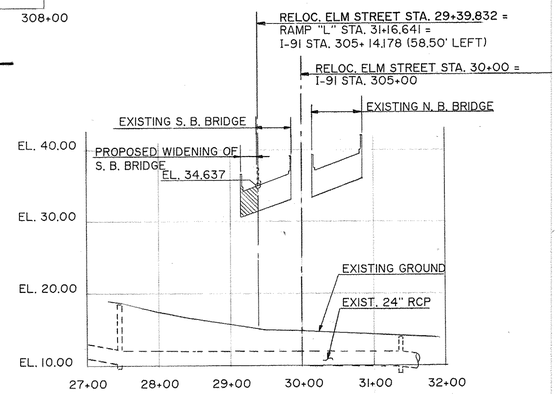

PROFILE ELM STREET

SCALE: VERTICAL 1" = 10'
HORIZONTAL 1" = 100'

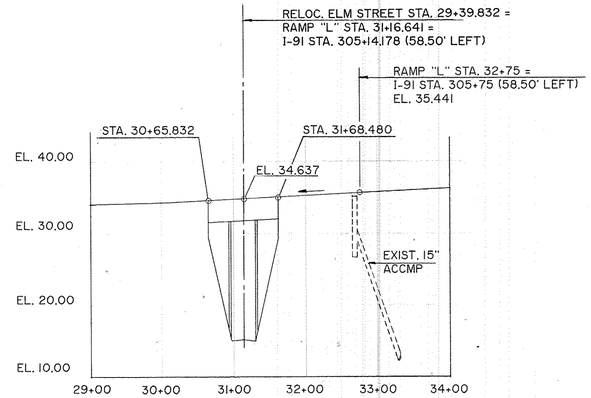

PROFILE RAMP "L"

SCALE: VERTICAL 1" = 10'
HORIZONTAL 1" = 100'

QUANTITIES

BRIDGE PAY ITEMS	UNIT	AMOUNT
REMOVAL OF BITUMINOUS WEARING SURFACE	S. Y.	475
STRUCTURE EXCAVATION - EARTH (COMPLETE)	C. Y.	575
BITUMINOUS CONCRETE - CLASS 1	TONS	75
BITUMINOUS CONCRETE - CLASS 12	TONS	50
SAWING AND SEALING JOINTS	L. F.	130
REMOVAL OF EXISTING MASONRY (PARAPET)	C. Y.	20
1-1/2" POLYVINYL CHLORIDE PLASTIC PIPE	L. F.	25
CLASS "A" CONCRETE	C. Y.	225
CLASS "S" CONCRETE	C. Y.	10
PARTIAL DEPTH PATCH	BAGS	25
FULL DEPTH PATCH	C. Y.	15
CLASS "F" CONCRETE	C. Y.	80
COPOLYMER CEMENTITIOUS MORTAR PATCH	GALS.	10
1/2" PREFORMED EXPANSION JOINT FILLER FOR BRIDGES	S. F.	100
1" PREFORMED EXPANSION JOINT FILLER FOR BRIDGES	S. F.	100
EPOXY BONDING COMPOUND	GALS.	10
EPOXY INJECTION CRACK REPAIR	L. F.	50
DEFORMED STEEL BARS	LBS.	9, 750
DEFORMED STEEL BARS - EPOXY COATED	LBS.	30, 000
DRILLING AND GROUTING REINFORCING BARS	L. F.	20
STRUCTURAL STEEL	L. S.	——
FIELD PAINTING OF STRUCTURE	S. F.	50
CONCRETE CYLINDER CURING BOX	EA.	1
MEMBRANE WATERPROOFING (SHEET)	S. Y.	725
DAMPPROOFING	S. Y.	70
TEMPORARY SHEET PILING	S. F.	1, 600
SHEET PILING MATERIAL LEFT IN PLACE	S. F.	750
8" x 16" SLOPED GRANITE STONE CURBING FOR BRIDGES	L. F.	125
PROTECTIVE COMPOUND FOR BRIDGES	S. Y	2,800
METAL BRIDGE RAIL (TRAFFIC) - EXTRUDED POST ALUMINUM	L. F.	125
REMOVAL OF EXISTING MASONRY	C. Y.	20
2" RIGID METAL CONDUIT IN STRUCTURE	L. F.	135
18" x 12" x 8" CAST IRON JUNCTION BOX	EA.	3
PERVIOUS STRUCTURE BACKFILL	C. Y.	140
COMPACTED GRAVEL FILL	C. Y.	110
JACKING EXISTING BEAMS	EA.	30
TEMPORARY PRECAST CONCRETE BARRIER CURB	L. F.	250
REMOVAL OF EXISTING METAL BRIDGE RAIL	L. S.	——
BEARING REPLACEMENT WITH ELASTOMERIC BEARING PADS	EA.	30
REPLACEMENT OF EXISTING CONCRETE BEARING PADS	EA.	12
2" ELASTOMERIC COMPRESSION SEAL	L. F.	145
ELASTOMERIC BEARING PAD	C. I.	4, 675
SAWCUTTING BRIDGE JOINTS	L. F.	130
CONSTRUCT CONCRETE HEADERS	BAGS	30
DRILLING AND GROUTING DOWELS	EA.	45
CRUSHED STONE FOR SLOPE PROTECTION	TONS	75

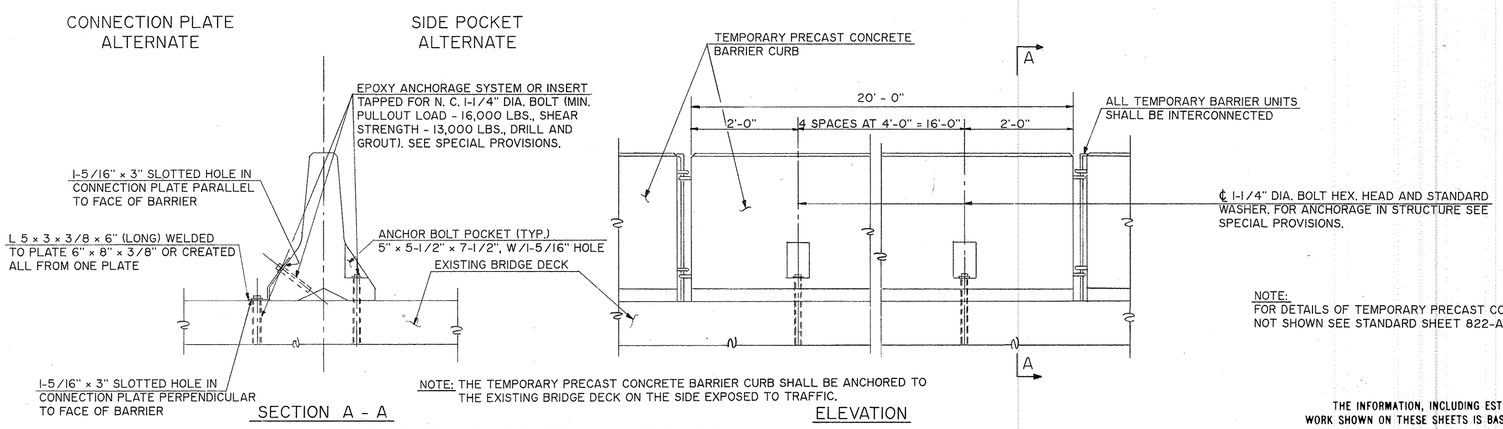

NOTE: THE TEMPORARY PRECAST CONCRETE BARRIER CURB SHALL BE ANCHORED TO THE EXISTING BRIDGE DECK ON THE SIDE EXPOSED TO TRAFFIC.

TEMPORARY BARRIER ANCHORAGE DETAIL

N. T. S.

NOTE:
FOR DETAILS OF TEMPORARY PRECAST CONCRETE BARRIER CURB NOT SHOWN SEE STANDARD SHEET 822-A

THIS SHEET NOT CORRECTED

THE INFORMATION, INCLUDING ESTIMATED QUANTITIES OF WORK SHOWN ON THESE SHEETS IS BASED ON LIMITED INVESTIGATIONS BY THE STATE AND IS IN NO WAY WARRANTED TO INDICATE THE TRUE CONDITIONS OR ACTUAL QUANTITIES OR DISTRIBUTION OF QUANTITIES OF WORK WHICH WILL BE REQUIRED.

NO.	DATE	DESCRIPTION

REVISIONS

STATE OF CONNECTICUT
DEPARTMENT OF TRANSPORTATION

WETHERSFIELD

MODERNIZATION OF ROUTES I-91/3 INTERCHANGE
WIDENING OF I - 91 SOUTHBOUND
OVER
ELM STREET

PROFILES AND QUANTITIES

ENGINEER H. W. LOCHNER, INC., BY L-C ASSOCIATES, INC.
DESIGNER A. S. D. DRAFTER A. S. D. CHECKER F. S. C.
APPROVED J. E. Clancy DATE 10/27/89
STRUCTURE NO. 159-164-5 BRIDGE LOG NO. 01457 STRUCTURE SHEET NO. 2 OF 21

STATE OF CONNECTICUT - DEPT. OF TRANSPORTATION

FORM NO. ENG. 158 ED 3-86

F.H.W.A. REGION NO.	STATE	TOWN	FED. AID PROJ. NO.	PROJ. NO.	YEAR	ROUTE NO.	SHEET NO.	TOTAL SHEETS
1	CONN.	WETHERSFIELD	FAP F-7(107)	159-164	1991	I-91/3	106	219

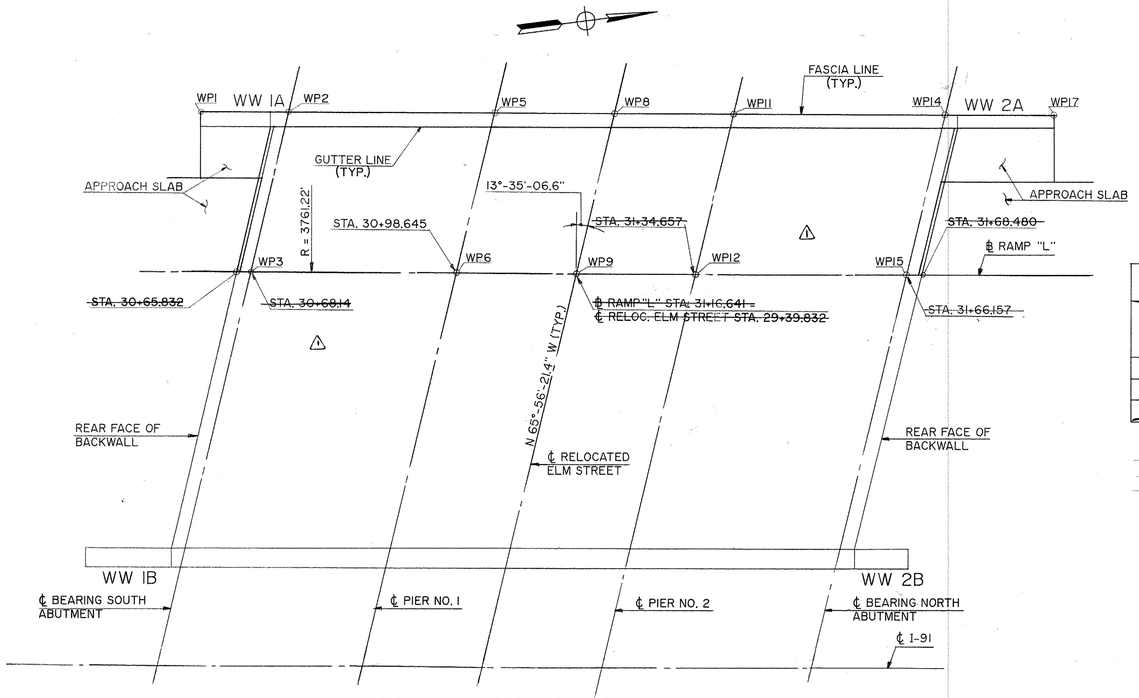

BASIC LAYOUT PLAN

N. T. S.

POINTS ON ℄ OF STRINGERS

STR. NO.	~~℄ EXP. BRG. S. ABUT.~~ NORTH	~~℄ EXP. BRG. S. ABUT.~~ EAST	~~℄ FIX. BRG. PIER 1~~ NORTH	~~℄ FIX. BRG. PIER 1~~ EAST	~~℄ EXP. BRG. PIER 1~~ NORTH	~~℄ EXP. BRG. PIER 1~~ EAST	~~℄ FIX. BRG. PIER 2~~ NORTH	~~℄ FIX. BRG. PIER 2~~ EAST	~~℄ EXP. BRG. PIER 2~~ NORTH	~~℄ EXP. BRG. PIER 2~~ EAST	~~℄ FIX. BRG. N. ABUT.~~ NORTH	~~℄ FIX. BRG. N. ABUT.~~ EAST
S 1	315, 146.5959	628, 712.4978	315, 176.0418	628, 718.1909	315, 177.1358	628, 718.3970	315, 211.4558	628, 724.7175	315, 212.5540	628, 724.9143	315, 242.9887	628, 730.2418
S 2	315, 143.3003	628, 719.8788	315, 172.7462	628, 725.5719	315, 173.8402	628, 725.7780	315, 208.1602	628, 732.0985	315, 209.2584	628, 732.2953	315, 239.6931	628, 737.6228
S 3	315, 140.0047	628, 727.2598	315, 169.4506	628, 732.9529	315, 170.5446	628, 733.1590	315, 204.8646	628, 739.4795	315, 205.9628	628, 739.6763	315, 236.3975	628, 745.0038
	℄ A-1		℄ P-1		℄ P-2				℄ A-2			
S-1	315146.1810	628712.3200	315176.0602	628718.0862	315211.4069	628724.5431			315242.3990	628730.0120		
S-2	315142.9260	628719.7000	315172.7615	628725.4622	315208.1214	628731.9250			315230.0360	628737.3760		
S-3	315139.6300	628727.0800	315169.4628	628732.8382	315204.8359	628739.3068			315235.7280	628744.7280		

WORKING POINTS

POINT	NORTH	EAST
WP1	315,134.8013	628,707.8295
WP2	315, 147.5543	628, 710.3514
WP3	315, 137.5494	628, 732.7587
WP5	315, 177.5242	628, 716.0972
WP6	315, 167.5003	628, 738.5471
WP8	315, 195.2262	628, 719.3720
WP9	315, 185.1907	628, 741.8479
WP11	315, 212.9644	628, 722.5651
WP12	315, 202.9171	628, 745.0676
WP14	315, 244.0153	628, 727.9426
WP15	315, 233.9466	628, 750.4929
WP17	315,257.8243	628,730.2475

COORDINATES OF INTERSECTION POINTS

LOCATION	LEFT GUTTER LINE NORTH	LEFT GUTTER LINE EAST	℄ RAMP "L" NORTH	℄ RAMP "L" EAST
END OF SLAB S. ABUT.	315, 145.0737	628, 711.8182	315, 135.8719	628, 732.4270
℄ BRG. S. ABUT.	315, 146.7522	628, 712.1477	315, 137.5494	628, 732.7587
℄ PIER NO. 1	315, 176.7206	628, 717.8969	315, 167.5003	628, 738.5471
℄ PIER NO. 2	315, 212.1590	628, 724.3691	315, 202.9171	628, 745.0676
℄ BRG. N. ABUT.	315, 243.2081	628, 729.7504	315, 233.9466	628, 750.4929
END OF SLAB N. ABUT.	315, 244.9059	628, 730.0368	315, 235.6432	628, 750.7816

△1 - As Built Information - Aug. 1995

THE INFORMATION, INCLUDING ESTIMATED QUANTITIES OF WORK SHOWN ON THESE SHEETS IS BASED ON LIMITED INVESTIGATIONS BY THE STATE AND IS IN NO WAY WARRANTEED TO INDICATE THE TRUE CONDITIONS OR ACTUAL QUANTITIES OR DISTRIBUTION OF QUANTITIES OF WORK WHICH WILL BE REQUIRED.

NO.	DATE	DESCRIPTION
		REVISIONS

CONNECTICUT
DEPARTMENT OF TRANSPORTATION

WETHERSFIELD

MODERNIZATION OF ROUTES I-91/3 INTERCHANGE
WIDENING OF I - 91 SOUTHBOUND
OVER
ELM STREET

LAYOUT PLAN & COORDINATES

ENGINEER H. W. LOCHNER, INC., BY L-C ASSOCIATES, INC.

DESIGNER A. S. D. | DRAFTER A. S. D. | CHECKER F. S. C.

APPROVED [signature] DATE 10/27/89

STRUCTURE NO. 159-164-5 | BRIDGE LOG NO. 01457 | STRUCTURE SHEET NO. 3 OF 21

159-164

449-01

10

BORING NO. ES5

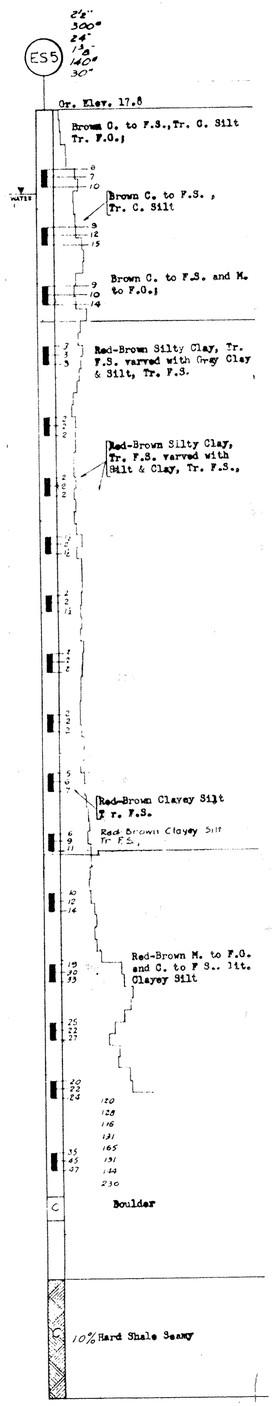

BORING NO. ES6

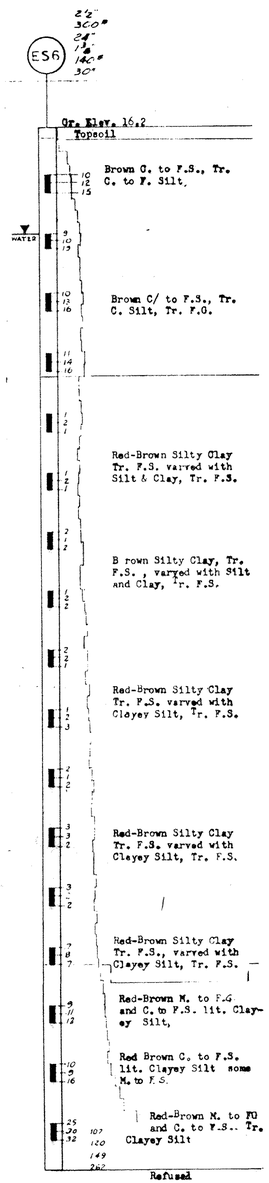

ABBREVIATIONS

C	Coarse
F	Fine
M	Medium
G	Gravel
S	Sand
Boul	Boulders
Cobb	Cobbles
lit	little
Tr	Trace
Misc	Miscellaneous
Org	Organic

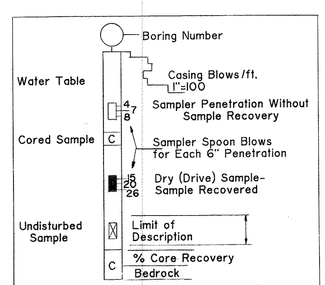

KEY

THIS SHEET NOT CORRECTED

THE INFORMATION, INCLUDING ESTIMATED QUANTITIES OF WORK SHOWN ON THESE SHEETS IS BASED ON LIMITED INVESTIGATIONS BY THE STATE AND IS IN NO WAY WARRANTED TO INDICATE THE TRUE CONDITIONS OR ACTUAL QUANTITIES OR DISTRIBUTION OF QUANTITIES OF WORK WHICH WILL BE REQUIRED.

NO.	DATE	DESCRIPTION

REVISIONS

STATE OF CONNECTICUT
DEPARTMENT OF TRANSPORTATION

WETHERSFIELD

MODERNIZATION OF ROUTES I-91/3 INTERCHANGE
WIDENING OF I - 91 SOUTHBOUND
OVER
ELM STREET

SOIL BORING

ENGINEER H. W. LOCHNER, INC., BY L-C ASSOCIATES, INC.
DESIGNER A.M.P. DRAFTER A.M.P. CHECKER D.L.
APPROVED J. Chang DATE 10/27/89
STRUCTURE NO. 159-164-5 BRIDGE LOG NO. 01457 STRUCTURE SHEET NO. 4 OF 21

STATE OF CONNECTICUT - DEPT. OF TRANSPORTATION

FORM NO ENG 18A ED 4-80

F.H.W.A. REGION	STATE	TOWN	FED. AID PROJ. NO.	PROJ. NO.	YEAR	ROUTE NO.	SHEET NO.	TOTAL SHEETS
1	CONN.	WETHERSFIELD	FAP F-7(107)	159-164	1991	I-91/3	108	219

BORING NO. P3-2

COORDINATES N 315225 E 628705

STATION 28 + 90 OFFSET 22'± LEFT

FORM SM-1 REV. 8/83
STATE OF CONNECTICUT
DEPARTMENT OF TRANSPORTATION
BUREAU OF HIGHWAYS
BORING REPORT

SHEET 1 OF 3

M. TIERNEY — BORING CREW LEADER
N. HIBBARD — INSPECTOR
S.M. ZYSKOWSKI — SOILS ENGINEER

TOWN: WETHERSFIELD
PROJECT NAME: RECONSTRUCTION RTE. 3
PROJECT NO.: 159-148

LOCATION: CONN DOT — BORING CONTRACTOR
H.W. LOCHNER INC. — DESIGN ENGINEER

LOCATION
SURFACE ELEV. 16.8
DATE FINISHED 3-27-86
GROUND WATER OBSERVATIONS
AT 8 FT. — AFTER 24 HRS.
AT FT. AFTER HRS.

	AUGER	CASING	SAMPLER	CORE BAR
TYPE		STEEL	SS	2
SIZE I.D.		2½	1 3/8	1 3/8
HAMMER WT.		300	140	BIT
HAMMER FALL		24	30	D/A

HOLE NO. P3-2
LINE & STATION
OFFSET
N. COORDINATE 315 225
E. COORDINATE 628 705

DEPTH	CASING BLOWS PER FOOT	SAMPLE DEPTHS IN FEET FROM - TO	NO.	PEN. INCH	REC. INCH	TYPE	BLOWS PER 6 INCHES ON SAMPLER 0-6	6-12	12-18	STRATA CHANGE DEPTH ELEV.	FIELD IDENTIFICATION OF SOIL. REMARKS (INCL. COLOR, LOSS OF WASH WATER, SEAMS IN ROCK, ETC.)
	8									1	BR. TOPSOIL
	39									(15.8)	
	28										
	20										
5	25	5-6½	1	18	12	D	4	8	9		
	10										
	17										
	17										
	19										
10	15	10-11½	2	18	12	D	12	15	17		BR. SAND
	10										
	15										
	20										
	14										
15	20	15-16½	3	18	12	D	2	4	12		
	26										
	31										
	38										
	29										
20	18	20-21½	4	18	0	D	2	5	5		
	25										
	26										
	32										
	20									24	
25	17	25-26½	5	18	15	D	1	1	1	(-7.2)	
	20										
	23										
	26										
	25										
30	20	30-31½	6	18	18	D	1	1	1		RD-BR. CLAY & SILT
	20										
	21										
	24										
	20										
35	17	35-36½	7	18	18	D	1	1	1		
	19										
	20										
	20										
	19										
	19	40-41½	8	18	18	D	1	1	1		

FROM GROUND SURFACE TO 70 FEET USED 2½ INCH CASING THEN 0 INCH CASING FOR 2 FEET

FOOTAGE IN EARTH 81 FOOTAGE IN ROCK 10 NO. OF SAMPLES 12 HOLE NO. P3-2

SAMPLE TYPE CODING: D=DRIVE C=CORE A=AUGER UP=UNDISTURBED, PISTON V=VANE TEST
PROPORTIONS USED: TRACE=1-10% LITTLE=10-20% SOME=20-35% AND=35-50%

FORM SM-1 REV. 8/83
STATE OF CONNECTICUT
DEPARTMENT OF TRANSPORTATION
BUREAU OF HIGHWAYS
BORING REPORT

SHEET 2 OF 2

M. TIERNEY — BORING CREW LEADER
N. HIBBARD — INSPECTOR
S.M. ZYSKOWSKI — SOILS ENGINEER

TOWN: WETHERSFIELD
PROJECT NAME: RECONSTRUCTION RTE. 3
PROJECT NO.: 159-148

LOCATION: CONN DOT — BORING CONTRACTOR
H.W. LOCHNER INC. — DESIGN ENGINEER

LOCATION
SURFACE ELEV. 16.8
DATE FINISHED 3-27-86
GROUND WATER OBSERVATIONS
AT 8 FT. — AFTER 24 HRS.
AT FT. AFTER HRS.

	AUGER	CASING	SAMPLER	CORE BAR
TYPE		STEEL	SS	2
SIZE I.D.		2½	1 3/8	1 3/8
HAMMER WT.		300	140	BIT
HAMMER FALL		24	30	D/A

HOLE NO. P3-2
LINE & STATION
OFFSET
N. COORDINATE 315 225
E. COORDINATE 628 705

DEPTH	CASING BLOWS PER FOOT	SAMPLE DEPTHS IN FEET FROM - TO	NO.	PEN. INCH	REC. INCH	TYPE	BLOWS PER 6 INCHES ON SAMPLER 0-6	6-12	12-18	STRATA CHANGE DEPTH ELEV.	FIELD IDENTIFICATION OF SOIL. REMARKS (INCL. COLOR, LOSS OF WASH WATER, SEAMS IN ROCK, ETC.)
	19										
	19										
	19										
	19										
45	20	45-46½	9	18	18	D	1	1	1		
	20										
	20										
	23										
5	21										
10	23	50-51½	10	18	18	D	1	2	2		
	28										
	25										
	27										
5	31										
15	22	55-56½	11	18	18	D	1	2	2		
	22										
	22										
	25										
	32									59	
20	24	60-61½	12	18	18	D	2	6	20	(-42.2)	
	31										
	32										
	33										
	24										
25	37	65-66½	13	18	12	D	6	8	8		
	25										
	27										
	28										
	63										
30	62	70-71½	14	18	0	D	7	6	7		RD-BR GRAVEL, SAND SILT & CLAY
	48										
	44										
	50										
	56										
35	44	75-76½	15	18	0	D	35	28	44		
	29										
	32										
	208										
	187										

FROM GROUND SURFACE TO 70 FEET USED 2½ INCH CASING THEN 0 INCH CASING FOR 2 FEET

FOOTAGE IN EARTH 81 FOOTAGE IN ROCK 10 NO. OF SAMPLES 12 HOLE NO. P3-2

SAMPLE TYPE CODING: D=DRIVE C=CORE A=AUGER UP=UNDISTURBED, PISTON V=VANE TEST
PROPORTIONS USED: TRACE=1-10% LITTLE=10-20% SOME=20-35% AND=35-50%

FORM SM-1 REV. 8/83
STATE OF CONNECTICUT
DEPARTMENT OF TRANSPORTATION
BUREAU OF HIGHWAYS
BORING REPORT

SHEET 3 OF 3

M. TIERNEY — BORING CREW LEADER
N. HIBBARD — INSPECTOR
S.M. ZYSKOWSKI — SOILS ENGINEER

TOWN: WETHERSFIELD
PROJECT NAME: RECONSTRUCTION RTE. 3
PROJECT NO.: 159-148

LOCATION: CONN DOT — BORING CONTRACTOR
H.W. LOCHNER INC. — DESIGN ENGINEER

LOCATION
SURFACE ELEV. 16.8
DATE FINISHED 3-27-86
GROUND WATER OBSERVATIONS
AT 8 FT. — AFTER 24 HRS.
AT FT. AFTER HRS.

	AUGER	CASING	SAMPLER	CORE BAR
TYPE		STEEL	SS	2
SIZE I.D.		2½	1 3/8	1 3/8
HAMMER WT.		300	140	BIT
HAMMER FALL		24	30	D/A

HOLE NO. P3-2
LINE & STATION
OFFSET
N. COORDINATE 315 225
E. COORDINATE 628 705

DEPTH	CASING BLOWS PER FOOT	SAMPLE DEPTHS IN FEET FROM - TO	NO.	PEN. INCH	REC. INCH	TYPE	BLOWS PER 6 INCHES ON SAMPLER 0-6	6-12	12-18	STRATA CHANGE DEPTH ELEV.	FIELD IDENTIFICATION OF SOIL. REMARKS (INCL. COLOR, LOSS OF WASH WATER, SEAMS IN ROCK, ETC.)
										81	
										(-64.2)	
		81-86	1	60	0	C					
85											RD-BR. SANDSTONE
		86-91	2	60	0	C					
90											
										91	
										(-74.2)	BOTTOM OF BORING
95											
20											
25											
30											
35											

FROM GROUND SURFACE TO 70 FEET USED 2½ INCH CASING THEN 0 INCH CASING FOR 2 FEET

FOOTAGE IN EARTH 81 FOOTAGE IN ROCK 10 NO. OF SAMPLES 12 HOLE NO. P3-2

SAMPLE TYPE CODING: D=DRIVE C=CORE A=AUGER UP=UNDISTURBED, PISTON V=VANE TEST
PROPORTIONS USED: TRACE=1-10% LITTLE=10-20% SOME=20-35% AND=35-50%

THIS SHEET NOT CORRECTED

THE INFORMATION, INCLUDING ESTIMATED QUANTITIES OF WORK SHOWN ON THESE SHEETS IS BASED ON LIMITED INVESTIGATIONS BY THE STATE AND IS IN NO WAY WARRANTED TO INDICATE THE TRUE CONDITIONS OR ACTUAL QUANTITIES OR DISTRIBUTION OF QUANTITIES OF WORK WHICH WILL BE REQUIRED.

NO.	DATE	DESCRIPTION

REVISIONS

STATE OF CONNECTICUT
DEPARTMENT OF TRANSPORTATION

WETHERSFIELD

MODERNIZATION OF ROUTES I-91/3 INTERCHANGE
WIDENING OF I-91 SOUTHBOUND
OVER
ELM STREET

SOIL BORING

ENGINEER H. W. LOCHNER, INC., BY L-C ASSOCIATES, INC.
DESIGNER A.M.P. | DRAFTER A.M.P. | CHECKER D.L.
APPROVED [signature] DATE 10/27/89
STRUCTURE NO. 159-164-5 | BRIDGE LOG NO. 01457 | STRUCTURE SHEET NO. 5 OF 21

JOSEPH MERRITT & CO.

159-164

449-01

STATE OF CONNECTICUT - DEPT. OF TRANSPORTATION

FORM NO ENG 15A ED. 1-88

FHWA REGION NO.	STATE	TOWN	FED. AID PROJ. NO.	PROJ. NO.	YEAR	ROUTE NO.	SHEET NO.	TOTAL SHEETS
1	CONN.	WETHERSFIELD	FAP F-71(107)	159-164	1991	I-91/3	109	219

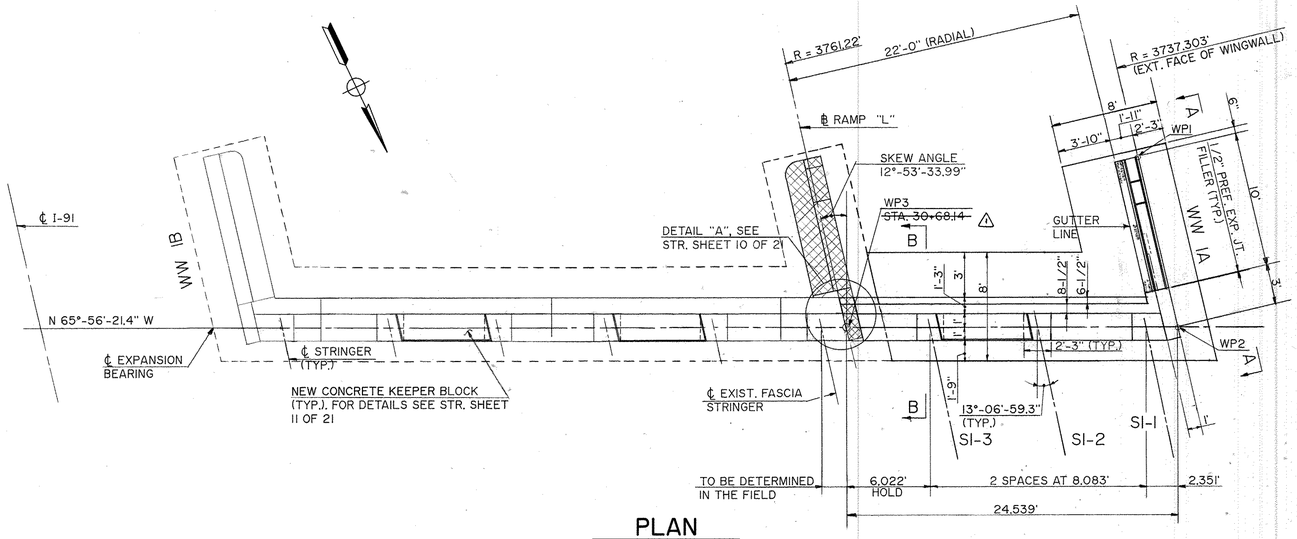

PLAN

SCALE: 3/16" = 1'-0"

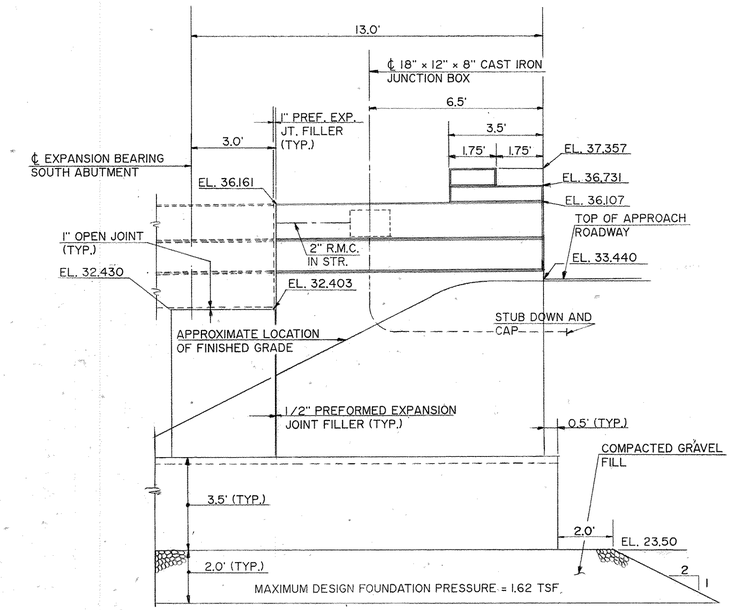

ELEVATION A - A

SCALE: 3/8" = 1'-0"

LEGEND:

- LIGHT SURFACE SPALL
- HOLLOW AREA
- HLC HAIRLINE CRACK
- EFF EFFLORESCENCE
- REMOVAL OF EXISTING SUBSTRUCTURE. THE CONTRACTOR SHALL REMOVE THE EXISTING WINGWALL UPTO 1.5'± (MAX.) BELOW THE TOP OF EXISTING APPROACH ROADWAY, OR AS DIRECTED BY THE ENGINEER.

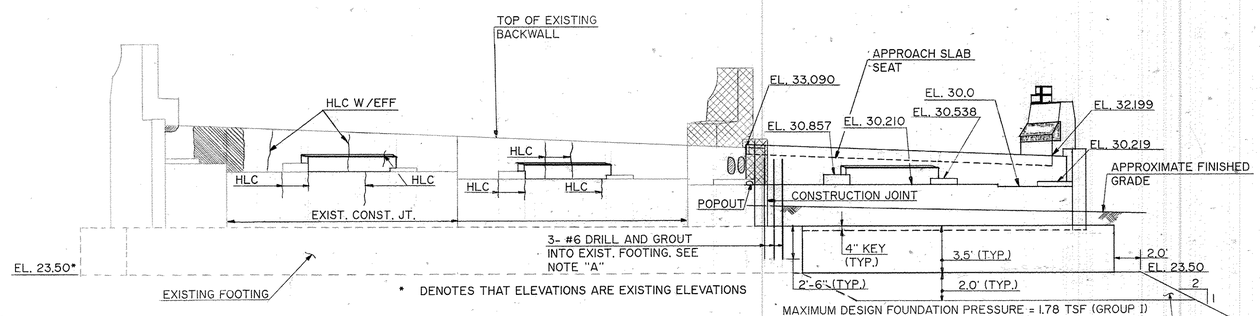

* DENOTES THAT ELEVATIONS ARE EXISTING ELEVATIONS

ELEVATION

SCALE: 3/16" = 1'-0"

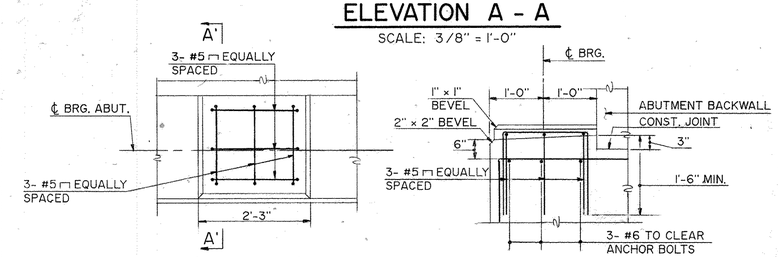

PLAN — SECTION A' - A'

CONCRETE BEARING PAD DETAILS

SCALE: 3/4" = 1'-0"

SUBSTRUCTURE REPAIR NOTES:

THE LOCATION, TYPE AND EXTENT OF REPAIR AREAS ON THIS SHEET ARE BASED ON FIELD INVESTIGATIONS CONDUCTED DURING APRIL 1988 BY L-C ASSOCIATES, INC. THE CONTRACTOR SHALL VERIFY THE SUBSTRUCTURE CONDITION BY CONDUCTING A THOROUGH INSPECTION OF THE ENTIRE SUBSTRUCTURE DURING THE TIME OF CONSTRUCTION AND IDENTIFY THE EXACT LOCATIONS AND AREAS OF ADDITIONAL REPAIRS REQUIRED, IF ANY, TO THE SATISFACTION OF THE ENGINEER.

THE CONTRACTOR SHALL TAKE UTMOST CARE DURING EXCAVATION AND CONSTRUCTION OF NEW SUBSTRUCTURE UNITS TO PREVENT ANY DAMAGE TO THE EXISTING SUBSTRUCTURE UNITS. IN CASE DAMAGE DOES OCCUR, IT SHALL BE REPAIRED BY THE CONTRACTOR TO THE SATISFACTION OF THE ENGINEER AT NO ADDITIONAL EXPENSE TO THE STATE.

NOTE "A": THE COST OF DRILLING AND GROUTING THE REINFORCEMENT INTO THE EXISTING FOOTING SHALL BE INCLUDED IN THE CONTRACT UNIT PRICE PER LINEAR FOOT FOR, "DRILLING AND GROUTING REINFORCING BARS".

NOTE:

FOR DETAILS OF SUBSTRUCTURE REPAIRS, SEE STR. SHEET 19 OF 21
FOR SECTION B-B REFER TO STR. SHEET 11 OF 21
FOR TYPICAL WINGWALL SECTION, REFER TO STR. SHEET 11 OF 21

△1 - AS BUILT INFORMATION - AUG 1995

THE INFORMATION, INCLUDING ESTIMATED QUANTITIES OF WORK SHOWN ON THESE SHEETS IS BASED ON LIMITED INVESTIGATIONS BY THE STATE AND IS IN NO WAY WARRANTED TO INDICATE THE TRUE CONDITIONS OR ACTUAL QUANTITIES OR DISTRIBUTION OF QUANTITIES OF WORK WHICH WILL BE REQUIRED.

NO.	DATE	DESCRIPTION

REVISIONS

STATE OF CONNECTICUT
DEPARTMENT OF TRANSPORTATION

WETHERSFIELD

MODERNIZATION OF ROUTES I-91/3 INTERCHANGE
WIDENING OF I - 91 SOUTHBOUND
OVER
ELM STREET

SOUTH ABUTMENT

ENGINEER H. W. LOCHNER, INC., BY L-C ASSOCIATES, INC.
DESIGNER A. S. D. DRAFTER A. S. D. CHECKER F. S. C.
APPROVED [signature] DATE 10/27/89
STRUCTURE NO. 159-164-5 BRIDGE LOG NO. 01457 STRUCTURE SHEET NO. 6 OF 21

159-164

449-01

STATE OF CONNECTICUT - DEPT. OF TRANSPORTATION

FORM NO ENG 15A ED. 1-88

F.H.W.A. REGION NO.	STATE	TOWN	FED. AID PROJ. NO.	PROJ. NO.	YEAR	ROUTE NO.	SHEET NO.	TOTAL SHEETS
1	CONN.	WETHERSFIELD	FAP F-7(107)	159-164	1991	I-91/3	110	219

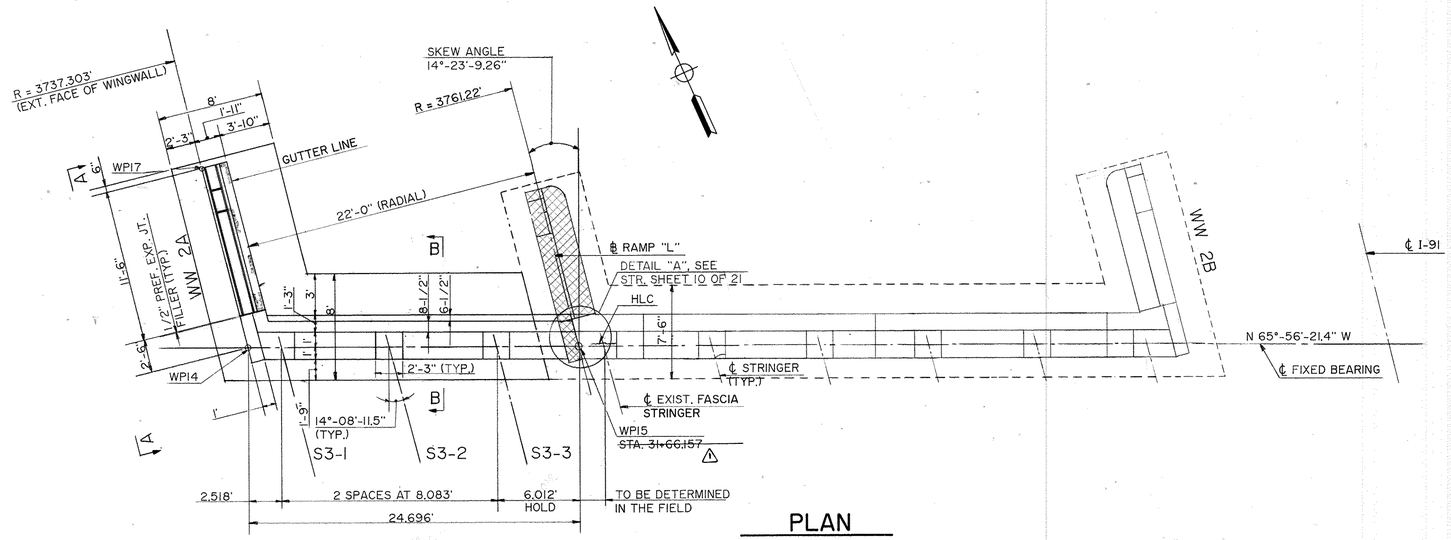

PLAN

SCALE: 3/16" = 1'-0"

LEGEND:

HLC	HAIRLINE CRACK
HVY	HEAVY
EFF	EFFLORESCENCE
▨	REMOVAL OF EXISTING SUBSTRUCTURE. THE CONTRACTOR SHALL REMOVE THE EXISTING WINGWALL UPTO 1.5'± (MAX.) BELOW THE TOP OF EXISTING APPROACH ROADWAY, OR AS DIRECTED BY THE ENGINEER.

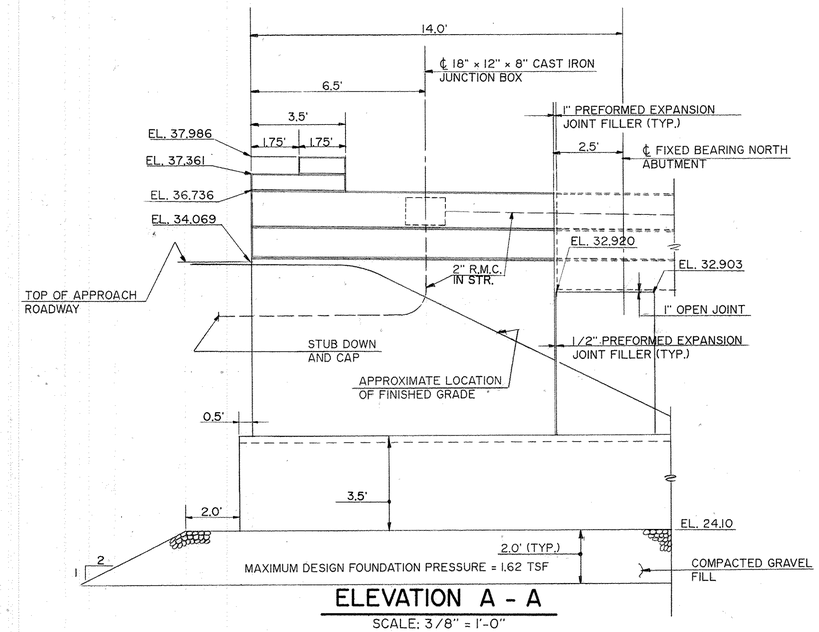

ELEVATION A - A

SCALE: 3/8" = 1'-0"

NOTES:

SEE STR. SHEET 6 OF 21 FOR SUBSTRUCTURE REPAIR NOTE.
FOR DETAILS OF SUBSTRUCTURE REPAIRS, SEE STR. SHEET 19 OF 21
FOR SECTION B-B REFER TO STR. SHEET 11 OF 21
FOR TYPICAL WINGWALL SECTION, REFER TO STR. SHEET 11 OF 21
FOR DETAILS OF BEARING PAD REINFORCEMENT, SEE STR. SHEET 6 OF 21

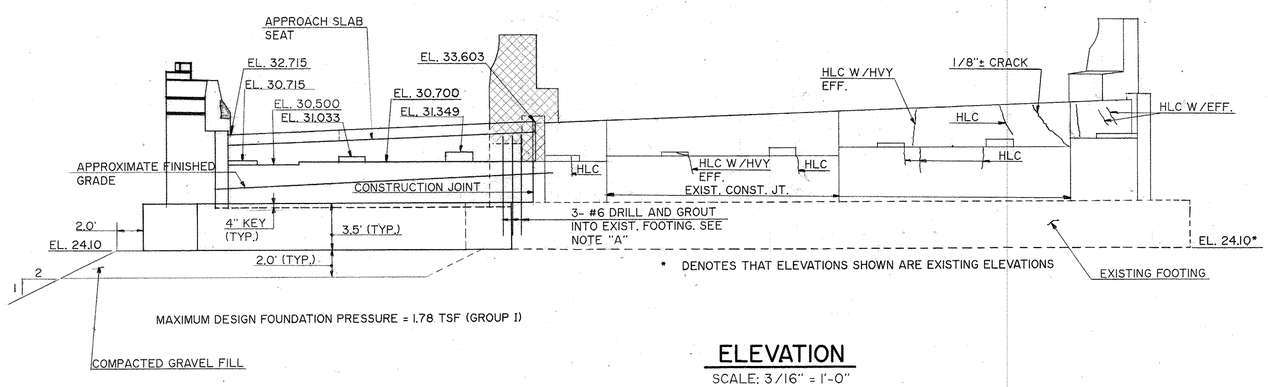

* DENOTES THAT ELEVATIONS SHOWN ARE EXISTING ELEVATIONS

ELEVATION

SCALE: 3/16" = 1'-0"

NOTE "A": THE COST OF DRILLING AND GROUTING THE REINFORCEMENT INTO THE EXISTING FOOTING SHALL BE INCLUDED IN THE CONTRACT UNIT PRICE PER LINEAR FOOT FOR, "DRILLING AND GROUTING REINFORCING BARS".

THE INFORMATION, INCLUDING ESTIMATED QUANTITIES OF WORK SHOWN ON THESE SHEETS IS BASED ON LIMITED INVESTIGATIONS BY THE STATE AND IS IN NO WAY WARRANTED TO INDICATE THE TRUE CONDITIONS OR ACTUAL QUANTITIES OR DISTRIBUTION OF QUANTITIES OF WORK WHICH WILL BE REQUIRED.

NO.	DATE	DESCRIPTION

REVISIONS

△ - AS BUILT INFORMATION - AUG 1995

STATE OF CONNECTICUT
DEPARTMENT OF TRANSPORTATION

WETHERSFIELD

MODERNIZATION OF ROUTES I-91/3 INTERCHANGE
WIDENING OF I - 91 SOUTHBOUND
OVER
ELM STREET

NORTH ABUTMENT

ENGINEER H. W. LOCHNER, INC., BY L-C ASSOCIATES, INC.
DESIGNER A. S. D. | DRAFTER A. S. D. | CHECKER F. S. C.
APPROVED [signature] DATE 10/27/89
STRUCTURE NO. 159-164-5 | BRIDGE LOG NO. 01457 | STRUCTURE SHEET NO. 7 OF 21

159-164

449-01

STATE OF CONNECTICUT - DEPT. OF TRANSPORTATION

FORM NO ENG 15A ED 4-80

F.H.W.A REGION	STATE	TOWN	FED. AID PROJ. NO.	PROJ. NO.	YEAR	ROUTE NO.	SHEET NO.	TOTAL SHEETS
1	CONN.	WETHERSFIELD	FAP F-71(107)	159-164	1991	I-91/3	111	219

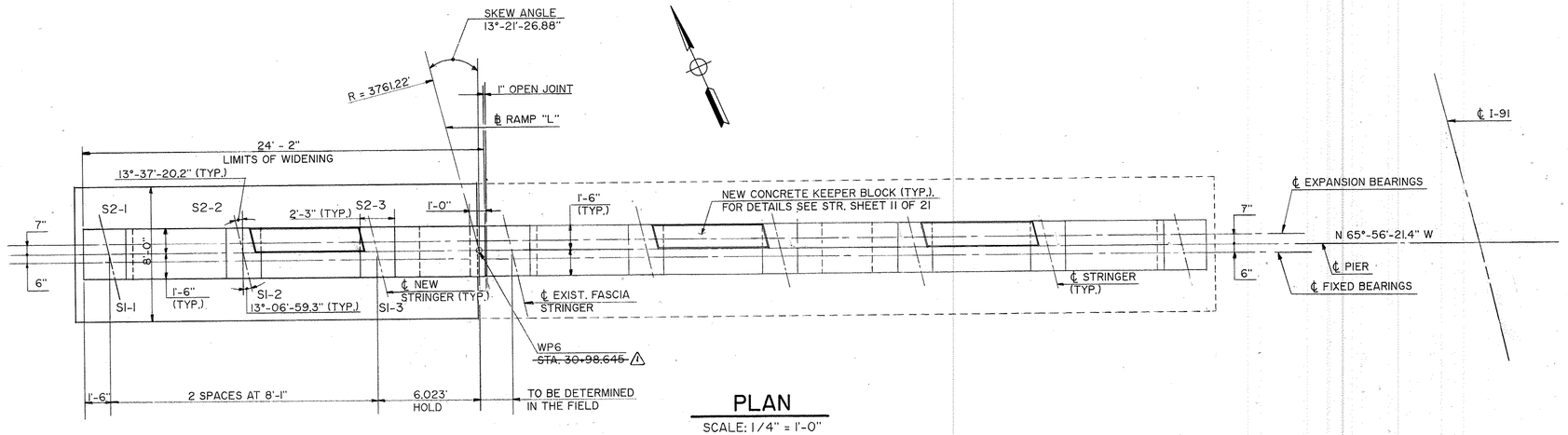

PLAN

SCALE: 1/4" = 1'-0"

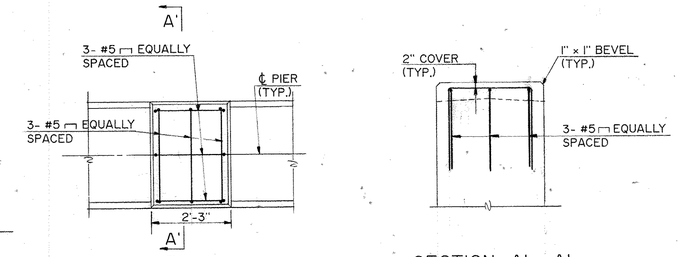

PLAN

SECTION A' - A'

BEARING PAD REINFORCEMENT DETAILS

SCALE: 1/2" = 1'-0"

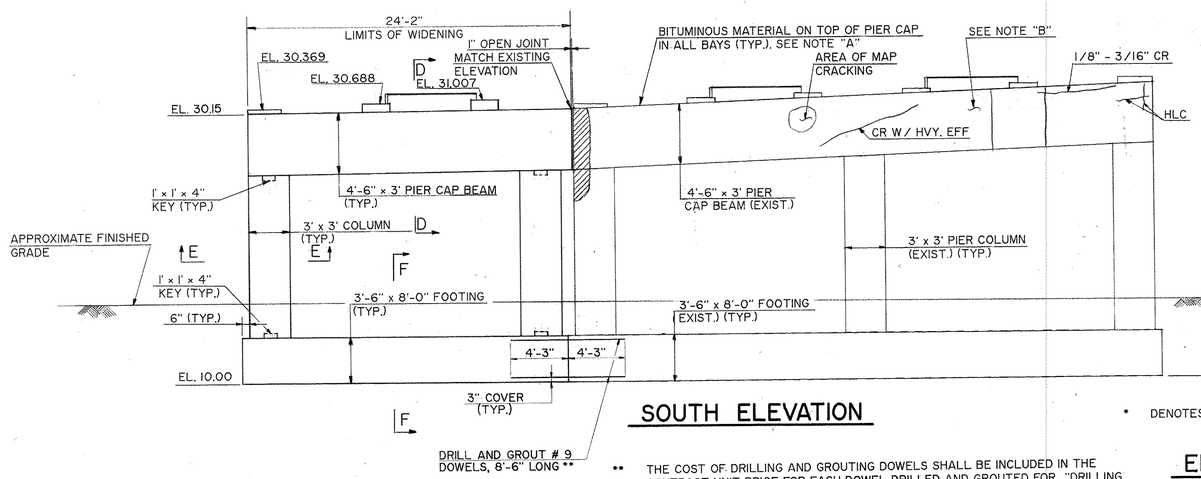

MAXIMUM DESIGN FOUNDATION PRESSURE = 1.67 TSF.

** THE COST OF DRILLING AND GROUTING DOWELS SHALL BE INCLUDED IN THE CONTRACT UNIT PRICE FOR EACH DOWEL DRILLED AND GROUTED FOR, "DRILLING AND GROUTING DOWELS".

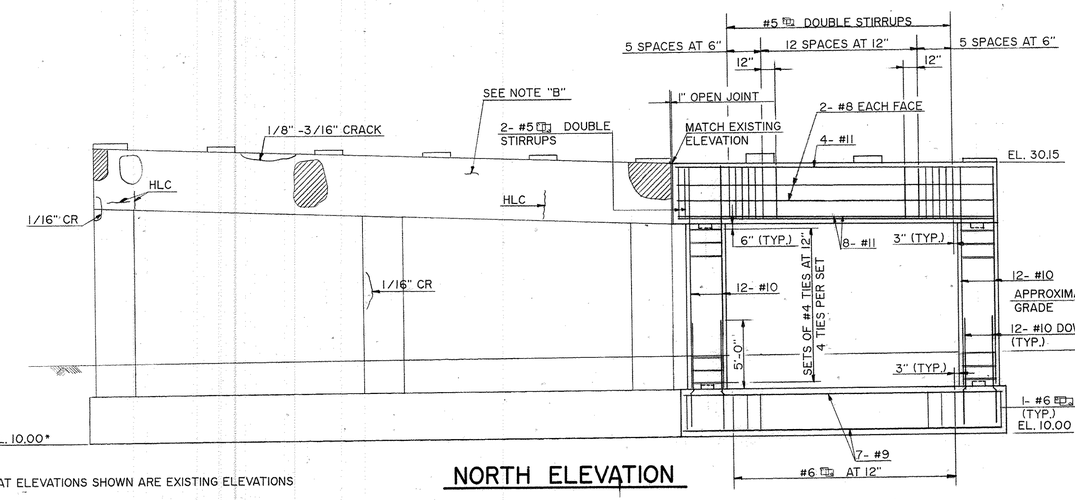

* DENOTES THAT ELEVATIONS SHOWN ARE EXISTING ELEVATIONS

ELEVATIONS

SCALE: 3/16" = 1'-0"

SOUTH ELEVATION

NORTH ELEVATION

MAXIMUM DESIGN FOUNDATION PRESSURE = 1.67 TSF.

△1 - As Built Information - Aug 1995

LEGEND:

- HOLLOW AREA
- SPALL W/EXPOSED REBAR
- HLC HAIRLINE CRACK
- CR CRACK
- EFF EFFLORESCENCE

NOTE "A": THE CONTRACTOR SHALL REMOVE THE BITUMINOUS MATERIAL FROM THE TOP OF THE PIER CAP AND DETERMINE THE CONDITION OF THE PIER CAP AS DIRECTED BY THE ENGINEER.

NOTE "B": MEDIUM TO HEAVY SCALING ON THE PIER CAP AND THE BEARING PADS.

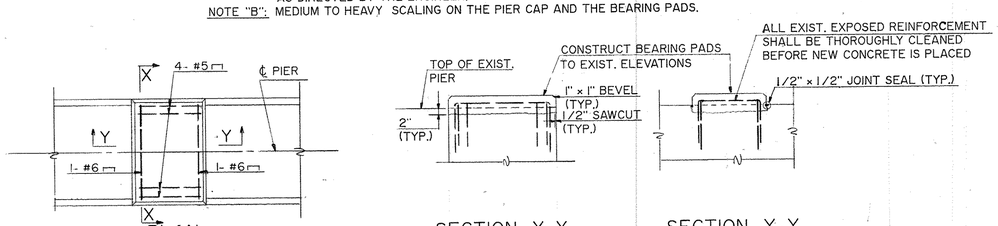

PLAN

SECTION X-X

SECTION Y-Y

CONCRETE BEARING PAD RECONSTRUCTION DETAIL

SCALE: 1/2 = 1'-0"

NOTES:

SEE STR. SHEET 6 OF 21 FOR SUBSTRUCTURE REPAIR NOTE.
FOR DETAILS OF SUBSTRUCTURE REPAIRS, SEE STR. SHEET 19 OF 21

ALL REPAIRS TO THE EXISTING PIER SHALL BE COMPLETED BEFORE CASTING THE PIER EXTENSION.

FOR SECTION D-D, E-E AND F-F, REFER TO STR. SHEET 11 OF 21

THE INFORMATION, INCLUDING ESTIMATED QUANTITIES OF WORK SHOWN ON THESE SHEETS IS BASED ON LIMITED INVESTIGATIONS BY THE STATE AND IS IN NO WAY WARRANTED TO INDICATE THE TRUE CONDITIONS OR ACTUAL QUANTITIES OR DISTRIBUTION OF QUANTITIES OF WORK WHICH WILL BE REQUIRED.

NO.	DATE	DESCRIPTION

REVISIONS

STATE OF CONNECTICUT
DEPARTMENT OF TRANSPORTATION

WETHERSFIELD

MODERNIZATION OF ROUTES I-91/3 INTERCHANGE
WIDENING OF I - 91 SOUTHBOUND
OVER
ELM STREET

PIER NO. 1

ENGINEER H. W. LOCHNER, INC., BY L-C ASSOCIATES, INC.
DESIGNER A. S. D. | DRAFTER A. S. D. | CHECKER F. S. C.
APPROVED [signature] | DATE 10/27/89
STRUCTURE NO. 159-164-5 | BRIDGE LOG NO. 01457 | STRUCTURE SHEET NO. 8 OF 21

JOSEPH MERRITT & CO.

159-164

449-01

STATE OF CONNECTICUT - DEPT. OF TRANSPORTATION

FORM NO ENG 15A ED 4-80

F.H.W.A. REGION	STATE	TOWN	FED. AID PROJ. NO.	PROJ. NO.	YEAR	ROUTE NO.	SHEET NO.	TOTAL SHEETS
1	CONN.	WETHERSFIELD	FAP F-7(107)	159-164	1991	I-91/3	112	219

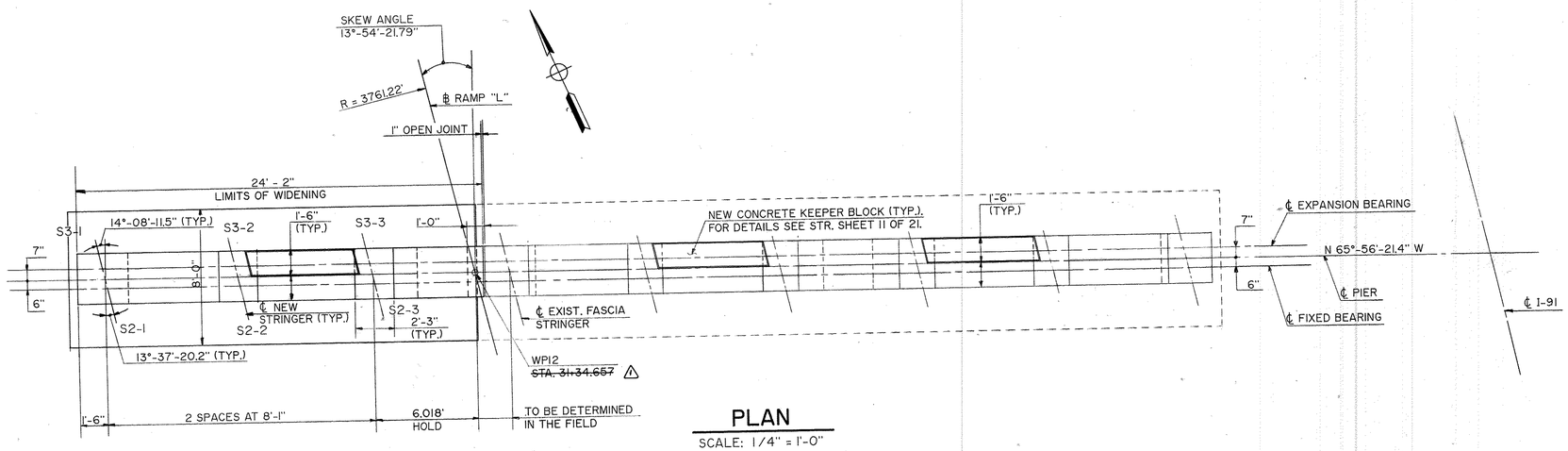

PLAN

SCALE: 1/4" = 1'-0"

LEGEND:

- SPALL WITH EXPOSED REBAR
- HOLLOW AREA
- CR CRACK
- HLC HAIRLINE CRACK

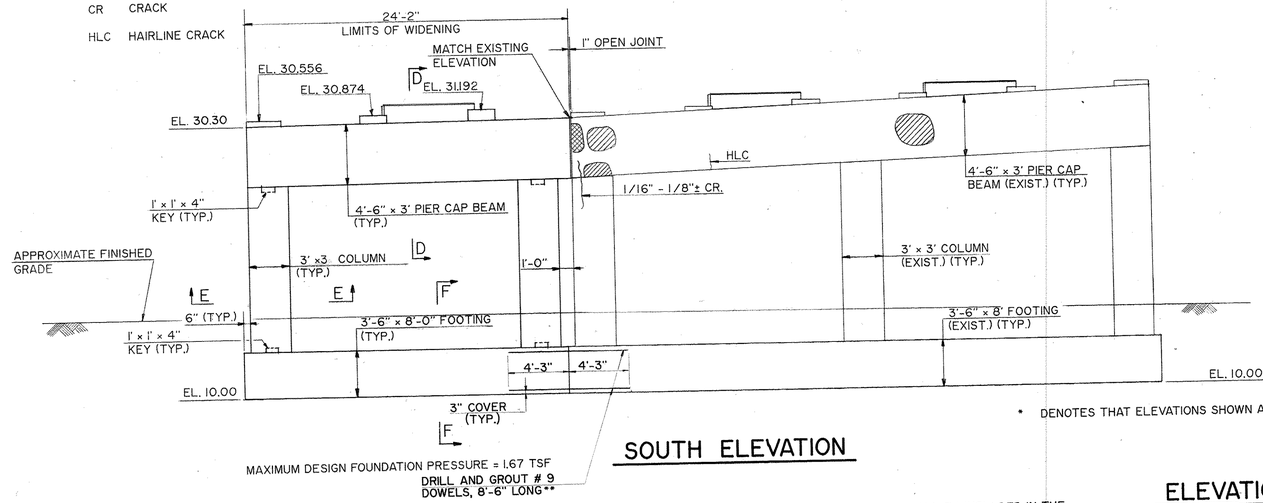

SOUTH ELEVATION

* DENOTES THAT ELEVATIONS SHOWN ARE EXISTING ELEVATIONS.

** THE COST OF DRILLING AND GROUTING DOWELS SHALL BE INCLUDED IN THE CONTRACT UNIT PRICE FOR EACH DOWEL DRILLED AND GROUTED FOR, "DRILLING AND GROUTING DOWELS".

ELEVATIONS

SCALE: 3/16" = 1'-0"

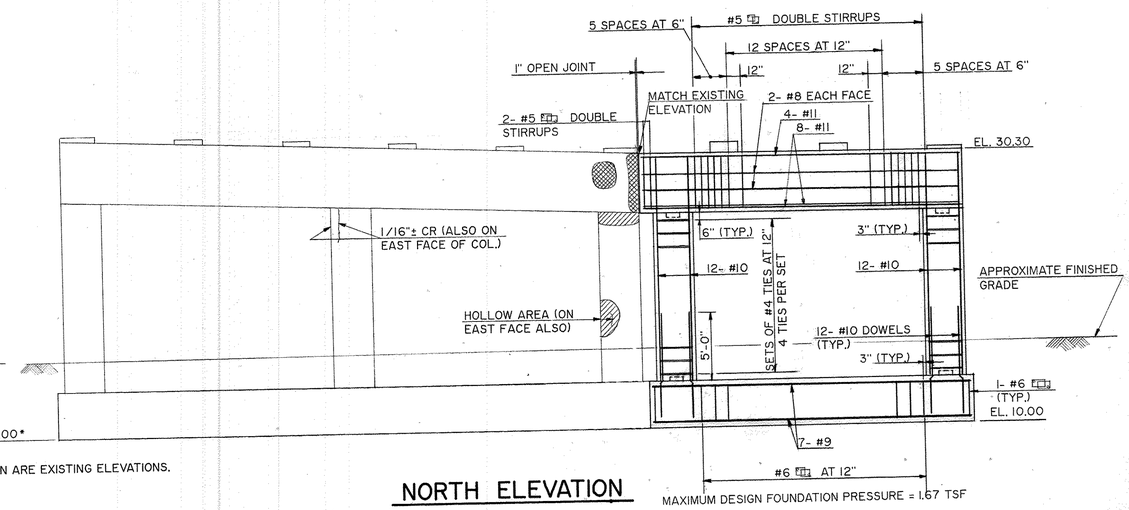

NORTH ELEVATION

△ - As Built Information - Aug 1995

NOT CORRECTED

NOTES:

SEE STR. SHEET 6 OF 21 FOR SUBSTRUCTURE REPAIR NOTE
FOR DETAILS OF SUBSTRUCTURE REPAIRS, SEE STR. SHEET 19 OF 21
ALL REPAIRS TO THE EXISTING PIER SHALL BE COMPLETED BEFORE CASTING THE PIER EXTENSION.
FOR SECTION D-D, E-E AND F-F, REFER TO STR. SHEET 11 OF 21

THE INFORMATION, INCLUDING ESTIMATED QUANTITIES OF WORK SHOWN ON THESE SHEETS IS BASED ON LIMITED INVESTIGATIONS BY THE STATE AND IS IN NO WAY WARRANTED TO INDICATE THE TRUE CONDITIONS OR ACTUAL QUANTITIES OR DISTRIBUTION OF QUANTITIES OF WORK WHICH WILL BE REQUIRED.

NO.	DATE	DESCRIPTION

REVISIONS

STATE OF CONNECTICUT
DEPARTMENT OF TRANSPORTATION

WETHERSFIELD

MODERNIZATION OF ROUTES I-91/3 INTERCHANGE
WIDENING OF I - 91 SOUTHBOUND
OVER
ELM STREET

PIER NO. 2

ENGINEER H. W. LOCHNER, INC., BY L-C ASSOCIATES, INC.
DESIGNER A. S. D. | DRAFTER A. S. D. | CHECKER F. S. C.
APPROVED [signature] | DATE 10/27/89
STRUCTURE NO. 159-164-5 | BRIDGE LOG NO. 01457 | STRUCTURE SHEET NO. 9 OF 21

JOSEPH MERRITT & CO.

159-164

449-01

STATE OF CONNECTICUT - DEPT. OF TRANSPORTATION

FORM NO. ENG 15A ED. 1-88

F.H.W.A. REGION NO.	STATE	TOWN	FED. AID PROJ. NO.	PROJ. NO.	YEAR	ROUTE NO.	SHEET NO.	TOTAL SHEETS
1	CONN.	WETHERSFIELD	FAP F-7(107)	159-164	1991	I-91/3	113	219

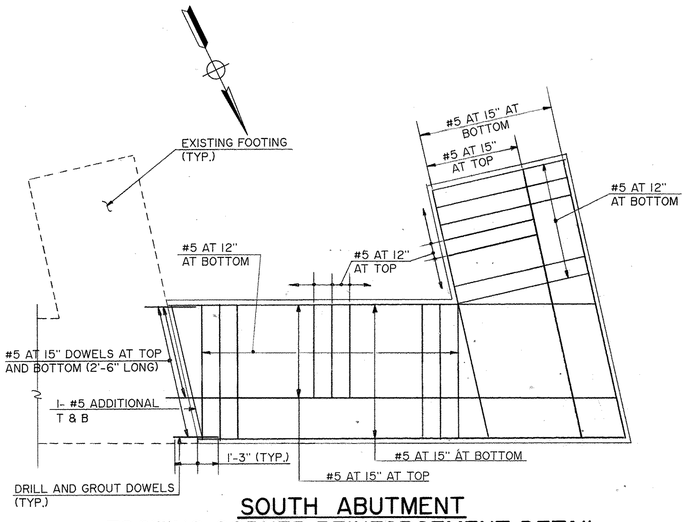

SOUTH ABUTMENT FOOTING CORNER REINFORCEMENT DETAIL

SCALE: 1/4" = 1'-0"

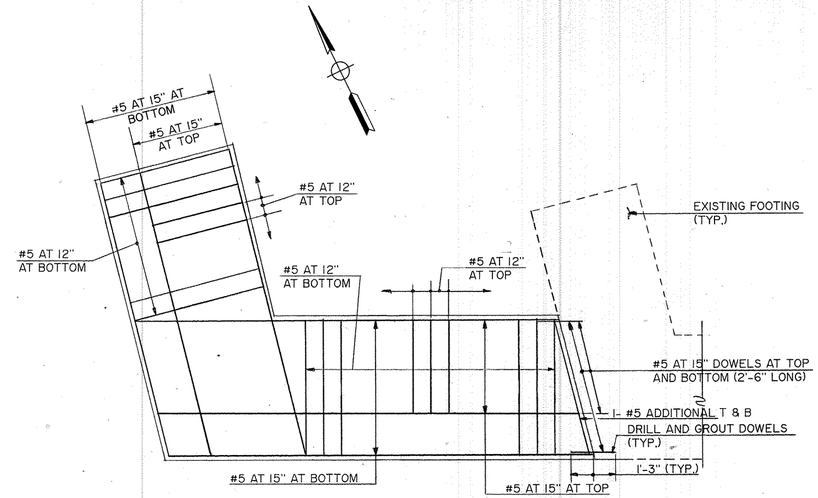

NORTH ABUTMENT FOOTING CORNER REINFORCEMENT DETAIL

SCALE: 1/4" = 1'-0"

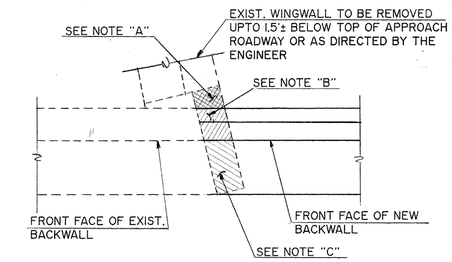

PLAN

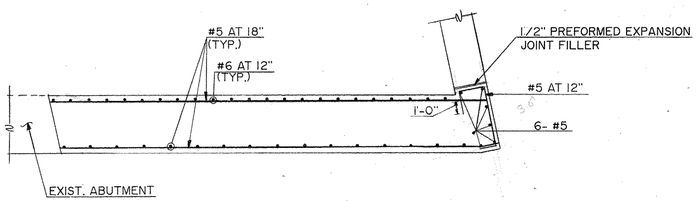

SOUTH ABUTMENT SECTION BELOW BRIDGE SEAT

SCALE: 1/4" = 1'-0"

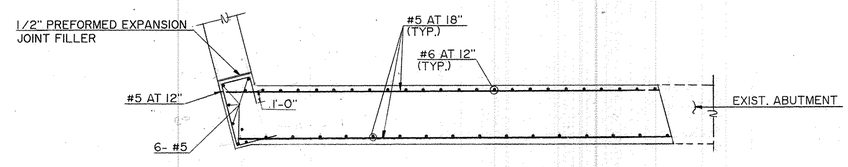

NORTH ABUTMENT SECTION BELOW BRIDGE SEAT

SCALE: 1/4" = 1'-0"

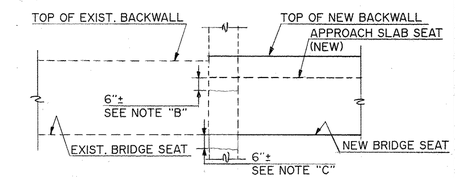

SECTION A - A

DETAIL "A"

SCALE: 3/8" = 1'-0"

(SOUTH ABUT. SHOWN NORTH ABUT. SIMILAR)

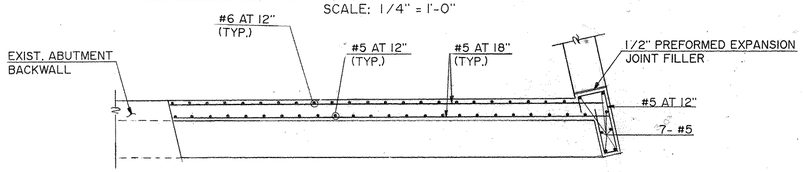

SOUTH ABUTMENT SECTION ABOVE BRIDGE SEAT

SCALE: 1/4" = 1'-0"

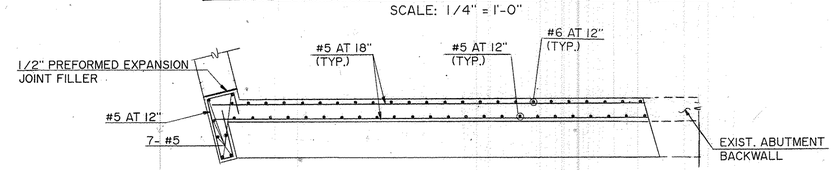

NORTH ABUTMENT SECTION ABOVE BRIDGE SEAT

SCALE: 1/4" = 1'-0"

NOTE "A": EXISTING CHEEKWALL TO BE REMOVED UPTO 1.5'± BELOW TOP OF APPROACH ROADWAY OR AS DIRECTED BY THE ENGINEER.

NOTE "B": EXISTING CHEEKWALL TO BE REMOVED UPTO 6"± BELOW NEW APPROACH SLAB SEAT.

NOTE "C": EXISTING CHEEKWALL TO BE REMOVED UPTO 6"± BELOW EXITING BRIDGE SEAT.

NOTE: FOR DETAILS OF REINFORCEMENT NOT SHOWN SEE STR. SHEET 11 OF 21

THIS SHEET NOT CORRECTED

THIS SHEET NOT CORRECTED

THE INFORMATION, INCLUDING ESTIMATED QUANTITIES OF WORK SHOWN ON THESE SHEETS IS BASED ON LIMITED INVESTIGATIONS BY THE STATE AND IS IN NO WAY WARRANTED TO INDICATE THE TRUE CONDITIONS OR ACTUAL QUANTITIES OR DISTRIBUTION OF QUANTITIES OF WORK WHICH WILL BE REQUIRED.

NO.	DATE	DESCRIPTION

REVISIONS

STATE OF CONNECTICUT
DEPARTMENT OF TRANSPORTATION

WETHERSFIELD

MODERNIZATION OF ROUTES I-91/3 INTERCHANGE
WIDENING OF I-91 SOUTHBOUND
OVER
ELM STREET

ABUTMENT REINFORCEMENT DETAILS

ENGINEER H. W. LOCHNER, INC., BY L-C ASSOCIATES, INC.

DESIGNER A. S. D. **DRAFTER** A. S. D. **CHECKER** F. S. C.

APPROVED [signature] **DATE** 1/15/90

STRUCTURE NO. 159-164-5 BRIDGE LOG NO. 01457 STRUCTURE SHEET NO. 10 OF 21

159-164

449-01

STATE OF CONNECTICUT - DEPT. OF TRANSPORTATION

FORM NO. ENG. 158 ED 3-86

F.H.W.A. REGION NO.	STATE	TOWN	FED. AID PROJ. NO.	PROJ. NO.	YEAR	ROUTE NO.	SHEET NO.	TOTAL SHEETS
1	CONN.	WETHERSFIELD	FAP F-71(107)	159-164	1991	I-91/3	114	219

NOTE "A": SLOPE LINE EXCEPT WHERE UNDISTURBED MATERIAL OBTRUDES WITHIN THIS AREA.

* MEASURED PERPENDICULAR TO THE WALL

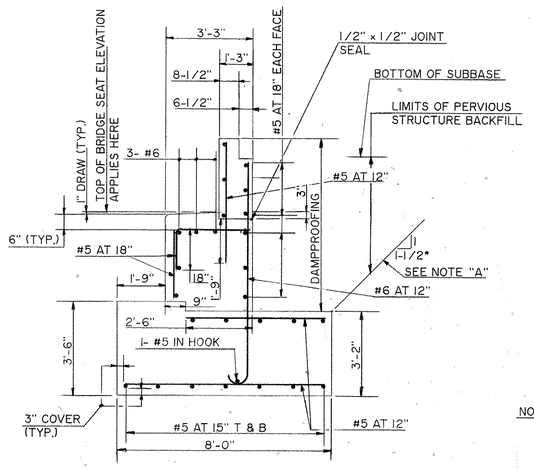

SECTION B - B

SCALE: 3/8" = 1'-0"

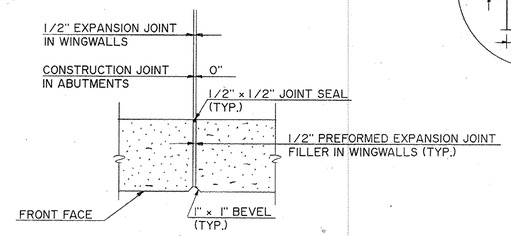

JOINT DETAIL

NOT TO SCALE

NOTE:
NO REINFORCEMENT SHALL PASS THROUGH EXPANSION JOINTS.
REINFORCEMENT SHALL PASS THROUGH CONSTRUCTION JOINTS.

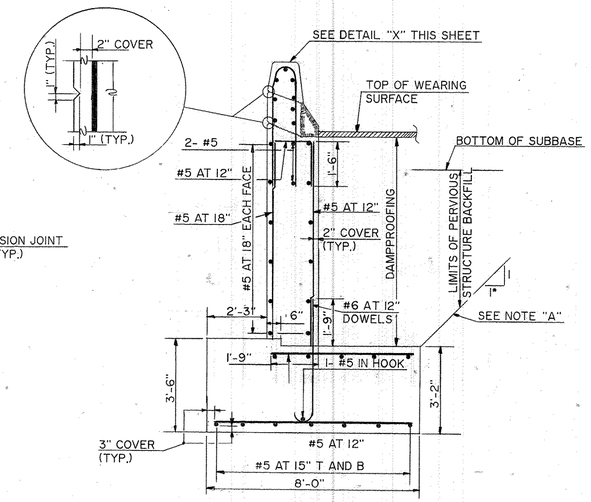

TYPICAL WINGWALL SECTION

SCALE: 3/8" = 1'-0"

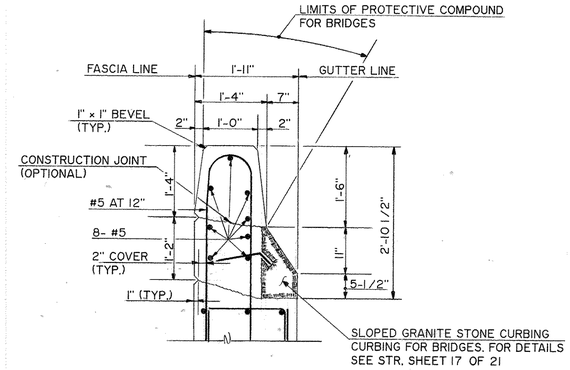

DETAIL "X"

SCALE: 3/4" = 1'-0"

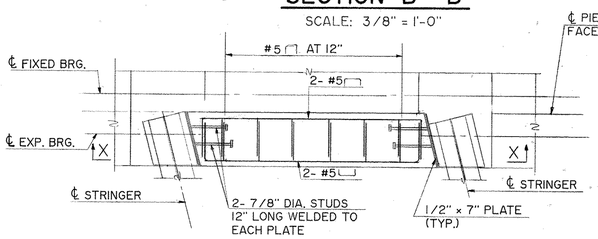

PLAN

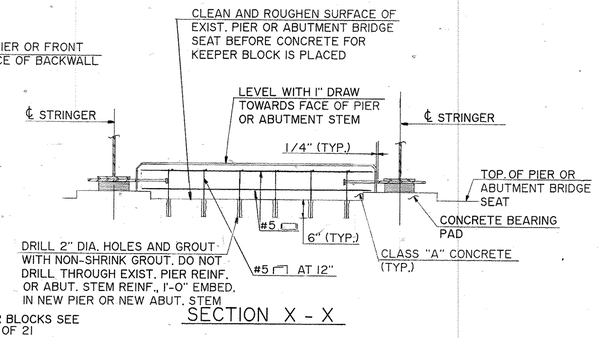

SECTION X - X

NOTE: FOR LOCATION OF KEEPER BLOCKS SEE STR. SHEETS 6, 8 AND 9 OF 21

KEEPER BLOCK DETAILS

SCALE: 1/2" = 1'-0"

DETAIL SHOWN AT EXIST. PIER, DETAIL SIMILAR FOR NEW PIER, EXIST. AND NEW ABUTMENT

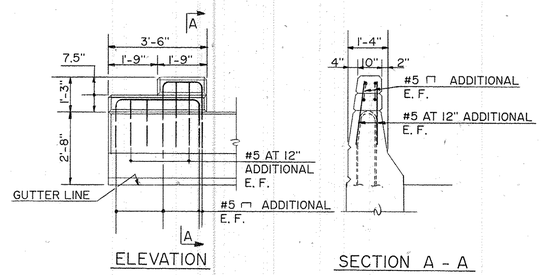

ELEVATION

SECTION A - A

PARAPET END BLOCK DETAIL

N. T. S.

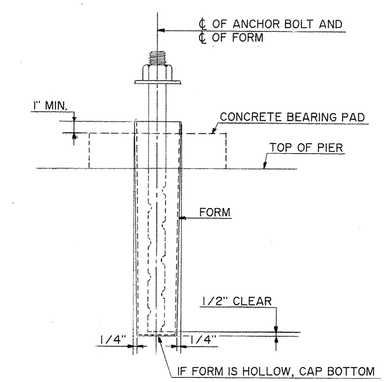

NOTE:
FORMS SHALL BE UNOILED, HELD IN PLACE ACCURATELY BY TEMPLATE, AND REMOVED AFTER CONCRETE HAS HARDENED.
ANCHOR BOLTS SHALL BE SET ACCURATELY AND GROUTED WITH NON - SHRINK GROUT.
THE COST OF FURNISHING AND INSTALLING FORMS TO BE INCLUDED IN THE CONTRACT UNIT PRICE PER CUBIC YARD FOR, "CLASS "A" CONCRETE."

THIS SHEET NOT CORRECTED

ANCHOR BOLT FORMS AT PIERS

N. T. S.

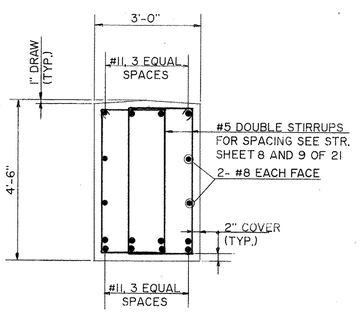

SECTION D - D

SCALE: 1/2" = 1'-0"

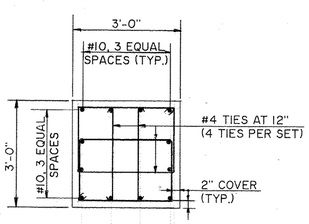

SECTION E - E

SCALE: 1/2" = 1'-0"

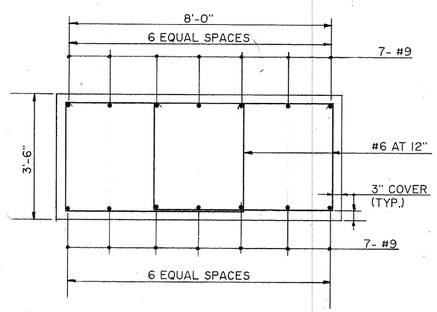

SECTION F - F

SCALE: 1/2" = 1'-0"

NOTE:
ALL REINFORCEMENT IN PIER CAPS AND COLUMNS SHALL BE EPOXY COATED.

THE INFORMATION, INCLUDING ESTIMATED QUANTITIES OF WORK SHOWN ON THESE SHEETS IS BASED ON LIMITED INVESTIGATIONS BY THE STATE AND IS IN NO WAY WARRANTED TO INDICATE THE TRUE CONDITIONS OR ACTUAL QUANTITIES OR DISTRIBUTION OF QUANTITIES OF WORK WHICH WILL BE REQUIRED.

THIS SHEET NOT CORRECTED

NO.	DATE	DESCRIPTION

REVISIONS

CONNECTICUT
DEPARTMENT OF TRANSPORTATION

WETHERSFIELD

MODERNIZATION OF ROUTES I-91/3 INTERCHANGE
WIDENING OF I - 91 SOUTHBOUND
OVER
ELM STREET

SUBSTRUCTURE DETAILS

ENGINEER H. W. LOCHNER, INC., BY L-C ASSOCIATES, INC.

DESIGNER A. S. D. | DRAFTER A. S. D. | CHECKER F. S. C.

APPROVED [signature] | DATE 12/27/89

STRUCTURE NO. 159-164-5 | BRIDGE LOG NO. 01457 | STRUCTURE SHEET NO. 11 OF 21

159-164

449-01

FORM NO. ENG. 158 ED 4-80

F.H.W.A. REGION	STATE	TOWN	FED. AID PROJ. NO.	PROJ. NO.	YEAR	ROUTE NO.	SHEET NO.	TOTAL SHEETS
1	CONN.	WETHERSFIELD	FAP F-7(107)	159-164	1991	I-91/3	115	219

NOTE: FOR STRINGER SKEW ANGLES, REFER TO STR. SHEETS 6, 7, 8 AND 9 OF 21.

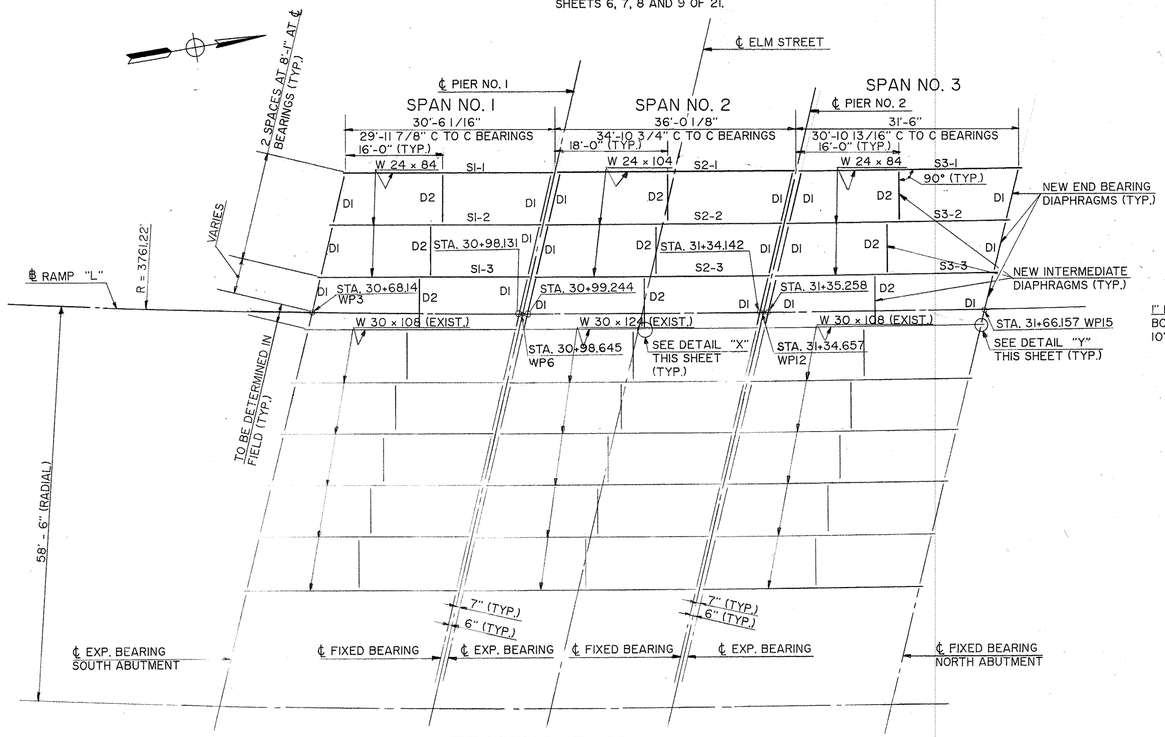

FRAMING PLAN

SCALE: 3/32" = 1'-0"

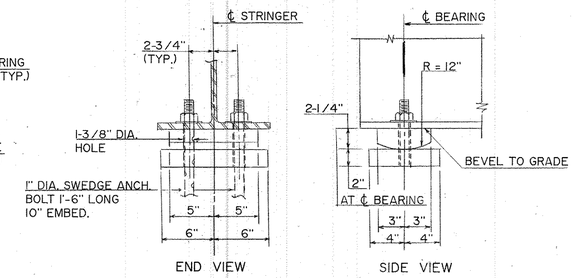

FIXED BEARING DETAILS

(AT NORTH ABUTMENT ONLY)
SCALE: 1-1/2" = 1'-0"

NOTE: EXISTING BEARINGS AT NORTH ABUTMENT TO REMAIN. FOR DETAILS OF BEARINGS IN THE WIDENED PORTION AND REPLACEMENT OF OTHER EXISTING BEARINGS, SEE STR. SHEET 13 OF 21

STEEL NOTES:

1. STRUCTURAL STEEL (LOW ALLOY) SHALL CONFORM TO ASTM A709 GRADE 50W (PAINTED).
2. WELDING DETAILS, PROCEDURE AND TESTING METHODS SHALL CONFORM TO THE AWS D1.5-88, UNLESS OTHERWISE NOTED ON THE PLANS.
3. MULTIPLE PASS WELDS, INSPECTED BY THE MAGNETIC PARTICLE METHOD SHALL HAVE EACH PASS OR LAYER INSPECTED AND ACCEPTED BEFORE PROCEEDING TO THE NEXT PASS OR LAYER, AS DETERMINED BY THE ENGINEER.
4. ENDS OF BEAMS SHALL BE VERTICAL AFTER THE APPLICATION OF FULL DEAD LOADS.
5. THE STRUCTURAL STEEL FABRICATORS SHALL BE CERTIFIED UNDER THE AISC QUALITY CONTROL PROGRAM, CATEGORY III, MAJOR STEEL BRIDGES.

DEAD LOAD DEFLECTIONS

DEAD LOAD DEFLECTIONS AT MIDSPAN (FEET)			CAMBERS AT MIDSPAN (FEET)		
STRINGER NO.	STRUCTURAL STEEL	OTHER DEAD LOADS	TOTAL DEAD LOADS	EXTRA CAMBER	TOTAL CAMBER
SPAN NO. 1					
S1-1	0.0024	0.0245	0.0269	0.0250	0.0519
S1-2, S1-3	0.0024	0.0273	0.0297	0.0250	0.0547
SPAN NO. 2					
S2-1	0.0040	0.0344	0.0384	0.0291	0.0675
S2-2, S2-3	0.0040	0.0383	0.0423	0.0291	0.0714
SPAN NO. 3					
S3-1	0.0027	0.0277	0.0304	0.0258	0.0562
S3-2, S3-3	0.0027	0.0309	0.0336	0.0258	0.0594

OTHER DEAD LOADS INCLUDE LOADS DUE TO CONCRETE SLAB, HAUNCH, PARAPETS, CURBS, RAILINGS AND BITUMINOUS CONCRETE OVERLAY.

NOTE WELL:

CONNECTION PLATES SHALL BE LOCATED SUCH THAT BOLTS WILL BE AT BOTTOM OF SLOTS AT TIME OF ERECTION. BOLTS SHALL BE FINGER TIGHT UNTIL SLAB IS POURED.

THE CONTRACTOR SHALL TAKE PROPER PRECAUTIONS TO ENSURE THE STABILITY OF THE NEW STRINGERS (IN ALL THREE SPANS) UNTIL THE ENTIRE NEW STRUCTURE IS BUILT.

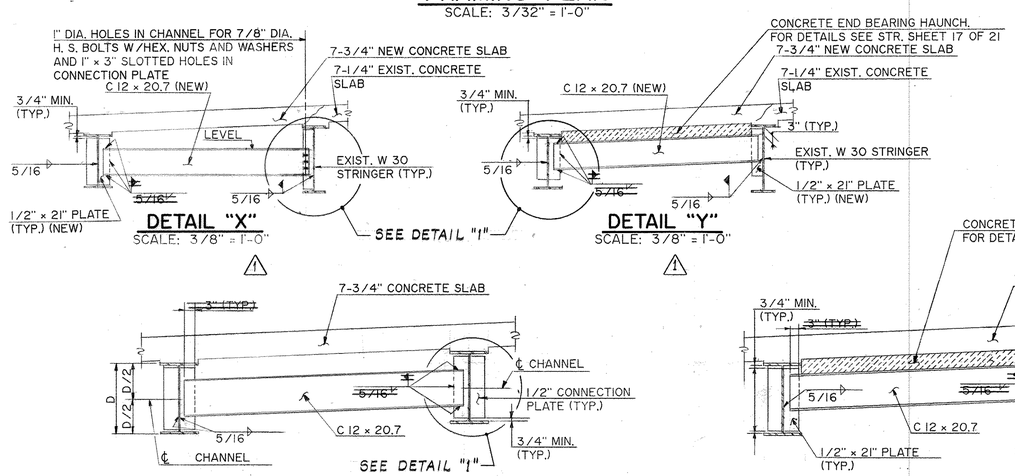

DIAPHRAGM DETAILS

SCALE: 1/2" = 1'-0"

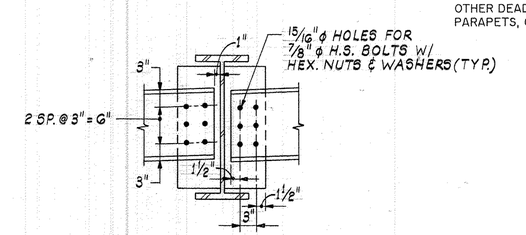

DETAIL "I"

SCALE: 1" = 1'-0"

THIS SHEET NOT CORRECTED

NO.	DATE	DESCRIPTION
1	3-10-93	CHANGE WELD TO BOLTS

REVISIONS

CONNECTICUT
DEPARTMENT OF TRANSPORTATION

WETHERSFIELD

MODERNIZATION OF ROUTES I-91/3 INTERCHANGE
WIDENING OF I - 91 SOUTHBOUND
OVER
ELM STREET

FRAMING PLAN

ENGINEER H. W. LOCHNER, INC., BY L-C ASSOCIATES, INC.
DESIGNER A. S. D. | DRAFTER A. S. D. | CHECKER F. S. C.
APPROVED [signature] | DATE 10/27/87
STRUCTURE NO. 159-164-5 | BRIDGE LOG NO. 01457 | STRUCTURE SHEET NO. 12 OF 21

159-164

449-01

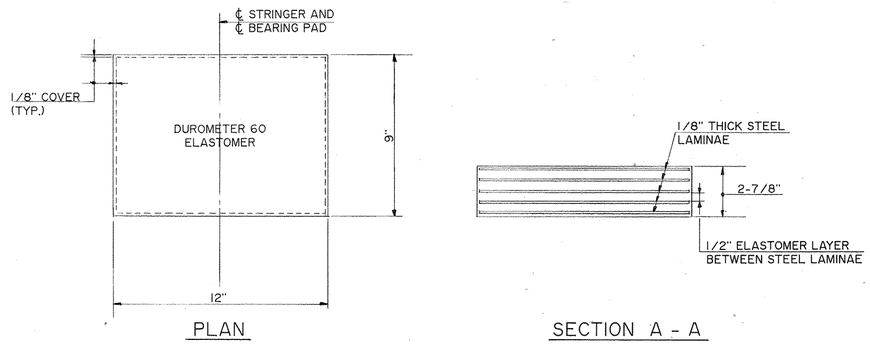

PLAN

SECTION A - A

ELASTOMERIC BEARING PAD DETAIL

N. T. S.

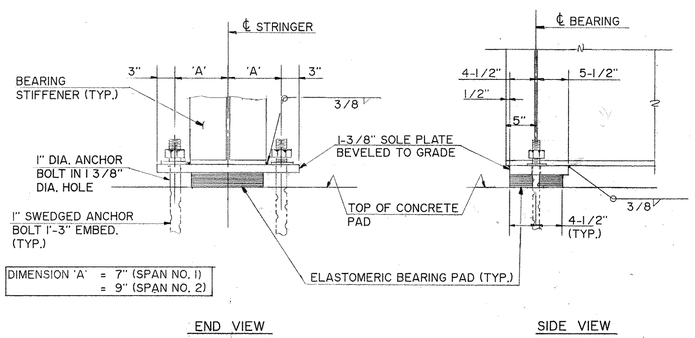

FIXED BEARINGS

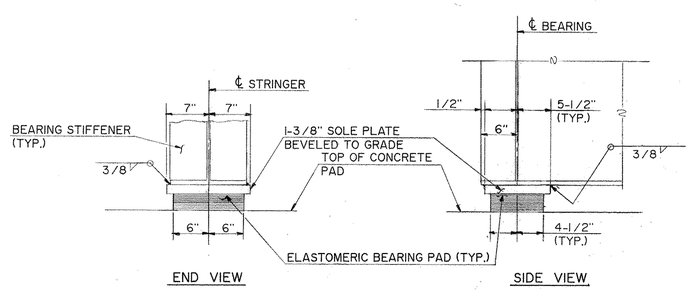

EXPANSION BEARINGS

NEW BEARING DETAILS

SCALE: 1" = 1'-0"

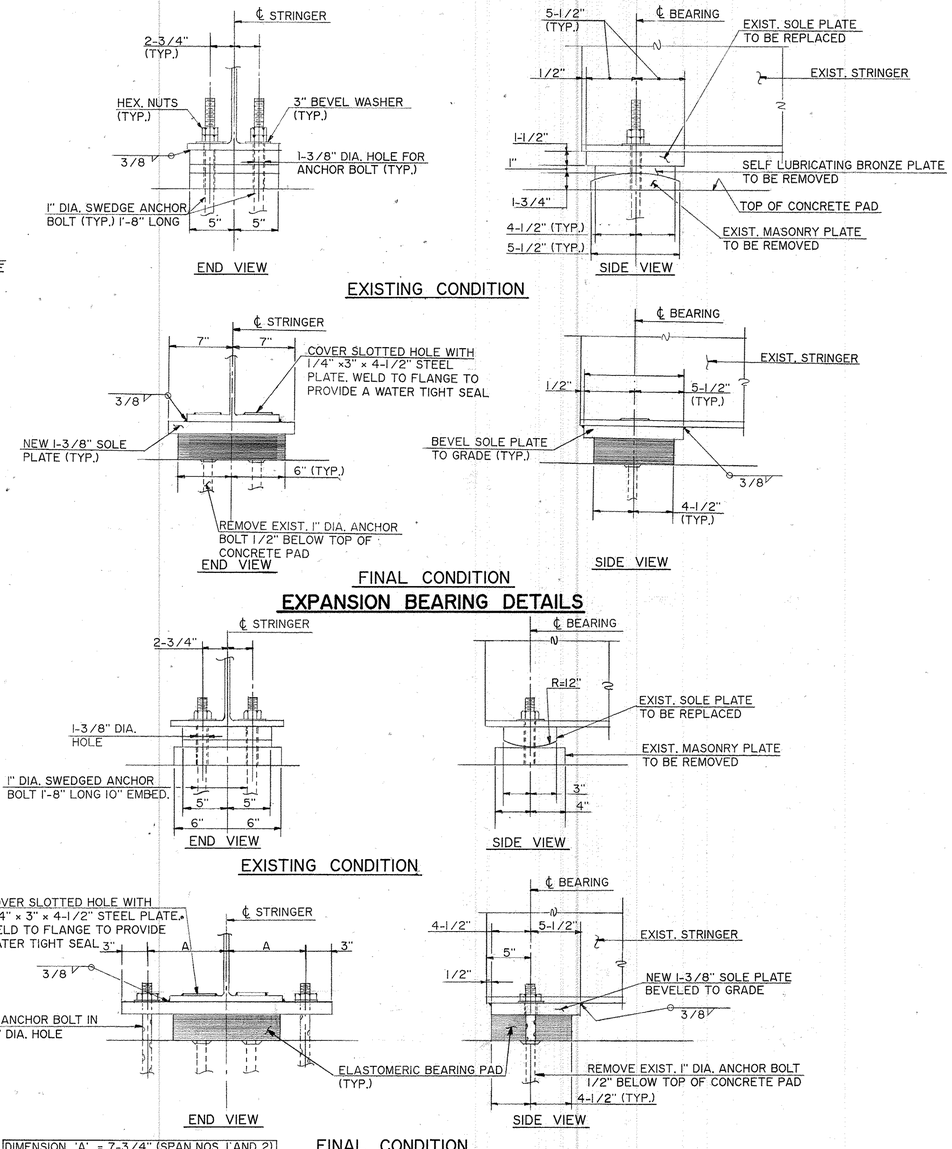

FIXED BEARING DETAILS

EXIST. BEARINGS REPLACEMENT DETAILS

SCALE: 1-1/2" = 1'-0"

BEARING NOTES:

1. ALL STEEL USED IN THE FIXED AND EXPANSION BEARINGS SHALL CONFORM TO ASTM A709 GRADE 50W.
2. SWEDGED ANCHOR BOLTS, NUTS AND WASHERS SHALL BE GALVANIZED IN ACCORDANCE WITH ASTM A153.
3. THE COST OF FURNISHING AND INSTALLING THE PLATES FOR KEEPER BLOCKS AND THE SOLE PLATES SHALL BE INCLUDED IN THE ITEM, "STRUCTURAL STEEL."
4. THE CONTRACTOR SHALL SET THE ELASTOMERIC BEARING PADS ON A PREPARED SURFACE AS REQUIRED BY ARTICLE 6.01.03-14. OF THE STANDARD SPECIFICATIONS.
5. SEE SPECIFICATIONS FOR TOLERANCES GOVERNING LAMINAE DIMENSIONS.
6. ELASTOMERIC BEARING PADS SHALL BE INSTALLED AT AN AMBIENT TEMPERATURE BETWEEN 50°F AND 70°F OR AS DIRECTED BY THE ENGINEER.
7. ELASTOMERIC BEARING PADS SHALL BE INSTALLED SO THAT THEIR SIDE FACES ARE VERTICAL AFTER APPLICATION OF FULL DEAD LOAD AT 50°F.
8. DUROMETER 60 ELASTOMER WAS ASSUMED TO HAVE A SHEAR MODULUS OF 120 PSI. AT 73°F FOR DESIGN. ANY VARIATION TO VALUE , AS OBTAINED FROM THE REQUIRED LOAD TESTS OF THE FABRICATED PADS, SHALL BE SUBMITTED TO THE ENGINEER FOR APPROVAL.
9. THE MAXIMUM DESIGN LOAD ON AN INDIVIDUAL PAD = 60 KIPS (DEAD LOAD PLUS LIVE LOAD/WITHOUT IMPACT).
10. SOLE PLATES IN CONTACT WITH THE ELASTOMERIC PADS SHALL BE BEVELED AN AMOUNT WHICH INCLUDES THE ROADWAY GRADE AND DEAD LOAD ROTATION OF STRINGERS (D. L. ROTATION =0.002 RAD. (SPAN NO. 1), 0.003 RAD. (SPAN NO. 2) AND 0.003 RAD. (SPAN NO. 3)). THE BOTTOM SURFACE OF THE SOLE PLATES SHALL BE LEVEL AFTER APPLICATION OF FULL DEAD LOAD.

SUGGESTED SEQUENCE OF OPERATION:

1. JACK BEAMS SIMULTANEOUSLY 3/8" MAXIMUM TO PROVIDE CLEARANCE FOR CUTTING ANCHOR BOLTS.
2. FREE ALL PLATES FROM EACH OTHER.
3. LIFT MASONRY PLATE AND BRONZE PLATE AND CUT ANCHOR BOLTS AT THE TOP OF THE CONCRETE PAD. REMOVE MASONRY PLATE AND BRONZE PLATE WITH ANCHOR BOLT. *
4. REMOVE REMAINING PORTION OF ANCHOR BOLT TO THE LEVEL SHOWN.
5. REPAIR OR REPLACE CONCRETE PAD IF ORDERED BY THE ENGINEER. THE FINISHED SURFACE SHALL BE SMOOTH AND LEVEL, VARYING NOT MORE THAN 1/16" FROM A TRUE PLANE.
6. WELD 1/4" PLATES OVER THE HOLES IN BEAM FLANGE.
7. DRILL AND GROUT 1" SWEDGED ANCHOR BOLTS (AT FIXED BEARINGS ON THE PIERS) DO NOT DRILL THROUGH PIER REINFORCEMENT. A PACHOMETER MAY BE USED TO LOCATE THE REINFORCEMENT PRIOR TO DRILLING. WELD THE NEW SOLE PLATE TO BOTTOM FLANGE OF BEAM.
8. CLEAN ALL DEBRIS FROM AREA, PLACE ELASTOMERIC BEARING UNDER THE BEAM. BOLT THE SOLE PLATE. BOLTING PROCEDURE SHALL BE IN ACCORDANCE WITH SUBARTICLE 6.03.03-19(C). (AT FIXED BEARINGS OVER PIERS)
9. LOWER ALL BEAMS SIMULTANEOUSLY ONTO THE BEARINGS.
10. TOUCH-UP PAINTED AREAS WHICH HAVE BEEN DAMAGED DURING THE JACKING OPERATION.

* MARK LOCATION OF CENTERLINE OF EXISTING SOLE PLATE ON THE BOTTOM FLANGE OF BEAM. REMOVE WELDS HOLDING SOLE PLATE TO BEAM BOTTOM FLANGE AND REMOVE THE SOLE PLATE.

THIS SHEET NOT CORRECTED

NOTE:

THE DETAILS SHOWN ON THIS SHEET (FIXED AND EXPANSION) APPLIES TO NEW AND REPLACEMENT OF EXISTING BEARINGS AT SOUTH ABUTMENT, PIER NO. 1 AND PIER NO. 2. FOR DETAILS OF FIXED BEARINGS AT NEW NORTH ABUTMENT, SEE STR. SHEET 12 OF 21.

NO.	DATE	DESCRIPTION

REVISIONS

STATE OF CONNECTICUT
DEPARTMENT OF TRANSPORTATION

WETHERSFIELD

MODERNIZATION OF I-91/ROUTE 3 INTERCHANGE
WIDENING OF I-91 SOUTHBOUND
OVER
ELM STREET

ELASTOMERIC BEARING PAD DETAILS

ENGINEER H. W. LOCHNER, INC., BY L-C ASSOCIATES, INC.

DESIGNER A. S. D. **DRAFTER** A. S. D. **CHECKER** F. S. C.

APPROVED J. E. Clancy **DATE** 1/15/90

STRUCTURE NO. 159-164-5 BRIDGE LOG. NO. 01457 STRUCTURE SHEET NO. 13 OF 21

FORM NO. ENG. 158 ED 4-80

F.H.W.A. REGION	STATE	TOWN	FED. AID PROJ. NO.	PROJ. NO.	YEAR	ROUTE NO.	SHEET NO.	TOTAL SHEETS
1	CONN.	WETHERSFIELD	FAP F-7(107)	159-164	1991	I-91/3	117	219

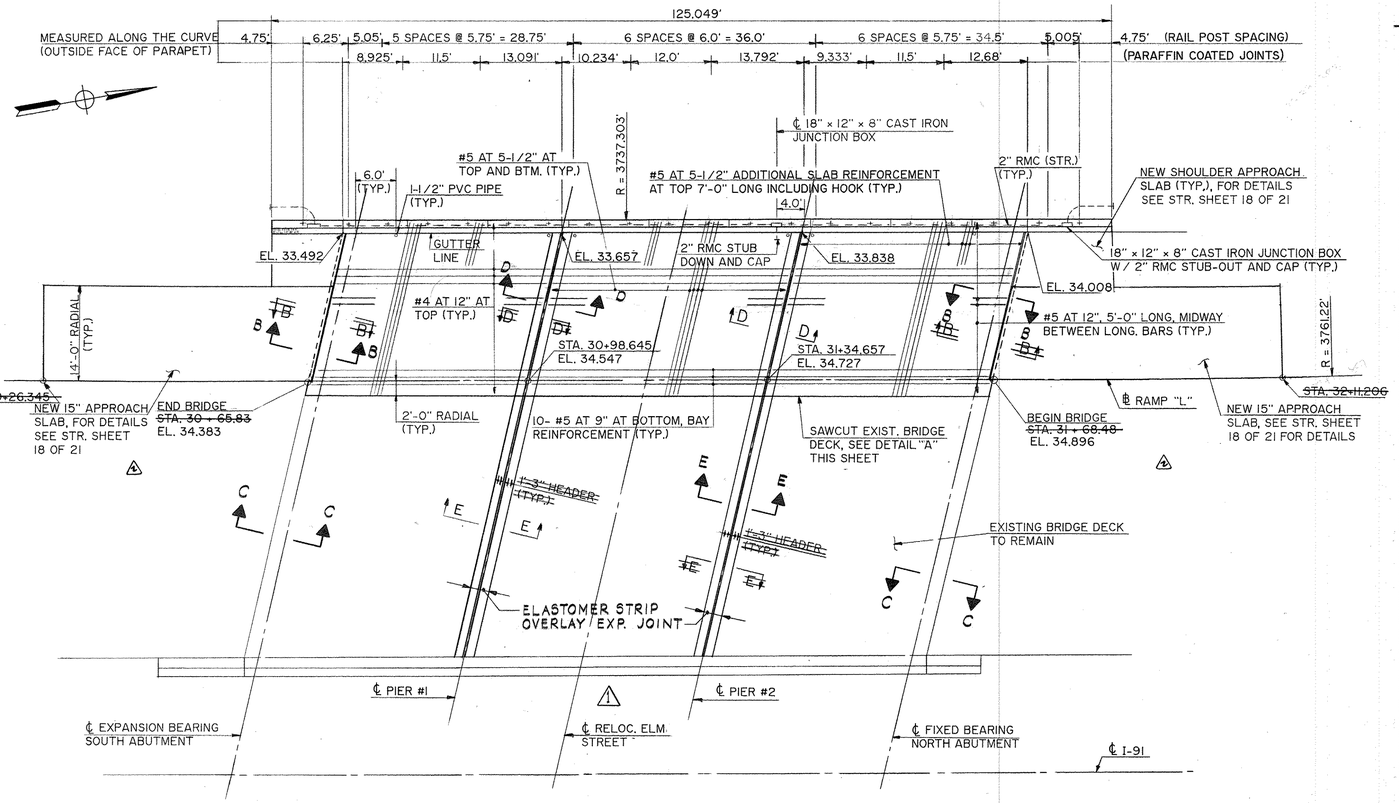

PLAN

SCALE: 3/32" = 1'-0"

NOTE : FOR WEARING SURFACE ELEVATIONS AT END OF WINGWALLS, SEE STR. SHT. 18 OF 21

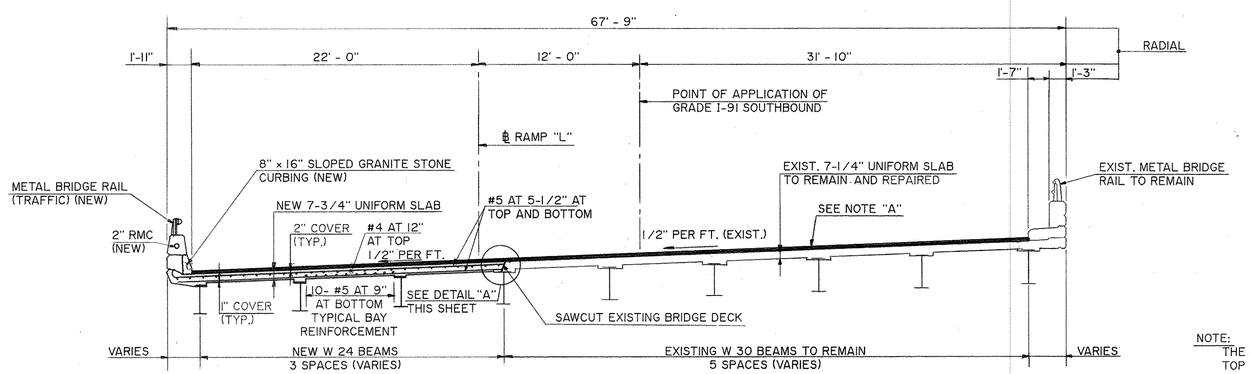

TYPICAL CROSS - SECTION

SCALE: 3/16" = 1'- 0"

~~NOTE: FOR DETAILS OF SECTION B-B AND D-D, SEE STR. SHEET 17 OF 21~~
~~FOR DETAILS OF SECTION E-E, SEE STR. SHEET 16 OF 21~~
FOR DETAILS OF APPROACH SLAB, SEE STR. SHEET 18 OF 21
FOR DETAILS OF PARTIAL AND FULL DEPTH PATCH, SEE STR. SHEET 16 OF 21
FOR DETAILS OF SECTION B-B, C-C, D-D AND E-E, SEE STR. SHEET 16-1 OF 21.

TOP OF CONCRETE ELEVATIONS

	STRINGER	℄ BRG. S. ABUT.	L/3	2L/3	℄ BRG. PIER NO. 1	
SPAN NO. 1	S1-1	33.311	33.362	33.412	33.461	
	S1-2	33.630	33.681	33.731	33.780	
	S1-3	33.949	34.000	34.050	34.099	
	STRINGER	℄ BRG. PIER NO. 1	L/4	2L/4	3L/4	℄ BRG. PIER NO. 2
SPAN NO. 2	S2-1	33.470	33.513	33.557	33.601	33.644
	S2-2	33.788	33.831	33.875	33.919	33.962
	S2-3	34.105	34.149	34.193	34.236	34.280
	STRINGER	℄ BRG. PIER NO. 2	L/3	2L/3	℄ BRG. N. ABUT.	
SPAN NO. 3	S3-1	33.653	33.705	33.757	33.807	
	S3-2	33.970	34.022	34.074	34.125	
	S3-3	34.286	34.339	34.391	34.441	

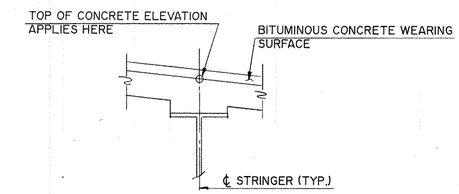

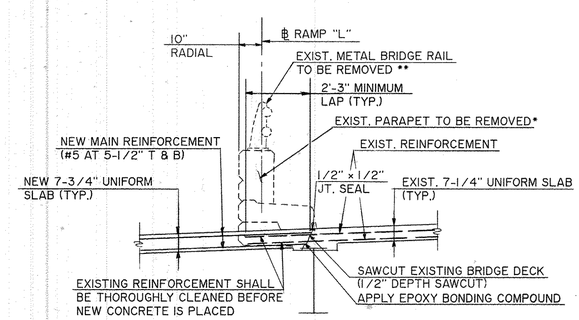

DETAIL " A "

SCALE: 3/8" = 1'-0"

* THE COST OF REMOVAL OF EXISTING PARAPET SHALL BE PAID FOR AT THE CONTRACT UNIT PRICE PER CUBIC YARD FOR, "REMOVAL OF EXISTING MASONRY (PARAPET)". SEE SPECIAL PROVISIONS.

** THE COST OF REMOVAL OF EXISTING METAL BRIDGE RAIL SHALL BE PAID FOR AT THE CONTRACT LUMP SUM PRICE FOR, "REMOVAL OF EXISTING METAL BRIDGE RAIL". SEE SPECIAL PROVISIONS.

NOTE "A"
1-1/2" BITUMINOUS CONCRETE CLASS - I ON 1" BITUMINOUS CONCRETE CLASS - 12 ON MEMBRANE WATERPROOFING (SHEET) (TYP.) (NEW)

NOTE:
THE CONTRACTOR SHALL REMOVE THE WEARING SURFACE FROM TOP OF THE EXISTING DECK AND DETERMINE THE AREAS REQUIRING REPAIRS. REPAIRS TO THE EXISTING BRIDGE DECK SHALL BE DONE USING "PARTIAL DEPTH PATCH" OR " FULL DEPTH PATCH" AS DETERMINED BY THE ENGINEER.

THE COST OF REMOVAL OF EXISTING WEARING SURFACE SHALL BE PAID FOR AT THE CONTRACT UNIT PRICE PER SQUARE YARD FOR, "REMOVAL OF BITUMINOUS WEARING SURFACE."

Δ - As Built Information Aug 1995

THIS SHEET NOT COMPLETE

NO.	DATE	DESCRIPTION
1	3-8-93	CHANGES TO DECK JT.

REVISIONS

CONNECTICUT
DEPARTMENT OF TRANSPORTATION

WETHERSFIELD

MODERNIZATION OF ROUTES I-91/3 INTERCHANGE
WIDENING OF I-91 SOUTHBOUND
OVER
ELM STREET

SLAB PLAN

ENGINEER H. W. LOCHNER, INC., BY L-C ASSOCIATES, INC.
DESIGNER A. S. D. | DRAFTER A. S. D. | CHECKER F. S. C.
APPROVED [signature] | DATE 10/27/89
STRUCTURE NO. 159-164-5 | BRIDGE LOG NO. 01457 | STRUCTURE SHEET NO. 14 OF 21

159-164

449-01

FORM NO. ENG. 158 ED 4-80

F.H.W.A. REGION	STATE	TOWN	FED AID PROJ. NO.	PROJ. NO.	YEAR	ROUTE NO.	SHEET NO.	TOTAL SHEETS
1	CONN.	WETHERSFIELD	FAP F-7(107)	159-164	1991	I-91/3	118	219

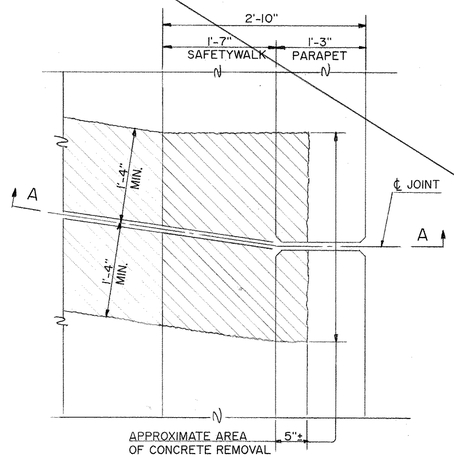

PLAN

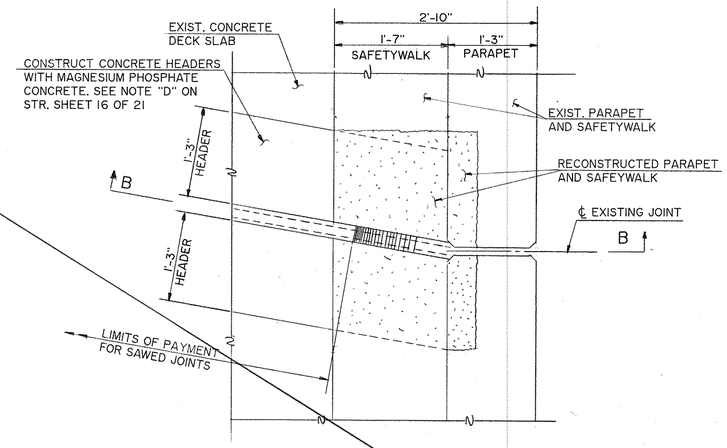

PLAN

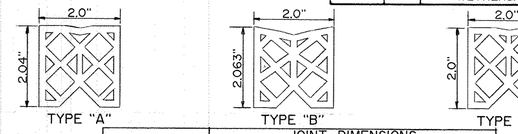

TYPE "A" TYPE "B" TYPE "C" TYPE "D"

ELASTOMERIC COMPRESSION SEAL		JOINT DIMENSIONS			
		WIDTH OF SAWCUT			DEPTH OF SAWCUT
		AMBIENT TEMPERATURE RANGE AT TIME OF SAWING JOINT			
NOM. WIDTH	TYPE	30°-50°	50°-70°	70°-90°	
2"	A	1-3/8"	1-5/16"	1-1/4"	2-7/8"
	B	1-3/8"	1-5/16"	1-1/4"	3-3/8"
	C	1-3/8"	1-5/16"	1-1/4"	2-5/8"
	D	1-7/16"	1-3/8"	1-5/16"	2-7/8"

ELASTOMERIC COMPRESSION SEAL DETAILS

N. T. S.

1. ELASTOMERIC COMPRESSION SEAL AND ASSOCIATED JOINT DETAILS ARE TO BE INSTALLED ON DECK JOINTS OVER BOTH PIERS.
2. COST OF REMOVAL OF SECTION OF EXISTING CONCRETE PARAPETS AND SAFETY WALKS ADJACENT TO THE EXISTING JOINT IN DECK SHALL BE INCLUDED IN THE CONTRACT UNIT PRICE PER LINEAR FOOT FOR, " 2" ELASTOMERIC COMPRESSION SEAL ".
3. ANY PORTION OF THE BRIDGE RAIL THAT IS REMOVED TO ALLOW REMOVAL OF CONCRETE SHALL BE REUSED UNLESS OTHERWISE DIRECTED BY THE ENGINEER. CARE SHALL BE TAKEN BY THE CONTRACTOR TO INSURE THAT NO DAMAGE IS DONE TO THE RAIL ELEMENTS OR ANCHORAGES. THE COST OF REMOVING AND RESETTING THE RAIL (IF REQUIRED) SHALL BE INCLUDED IN THE CONTRACT UNIT PRICE PER LINEAR FOOT FOR, " 2" ELASTOMERIC COMPRESSION SEAL ".
4. THE COST OF FURNISHING AND INSTALLING THE ELASTOMERIC COMPRESSION SEAL SHALL BE INCLUDED IN THE CONTRACT UNIT PRICE PER LINEAR FOOT FOR, " 2" ELASTOMERIC COMPRESSION SEAL ".
5. REMOVAL OF CONCRETE IN THE PARAPETS AND SAFETY WALKS FOR THE INSTALLATION OF THE COMPRESSION SEAL AS SHOWN ON THIS SHEET SHALL BE DONE BY ANY CONVENTIONAL METHOD.

LEGEND:

- EXISTING CONCRETE TO BE REMOVED
- NEW CLASS "F" CONCRETE

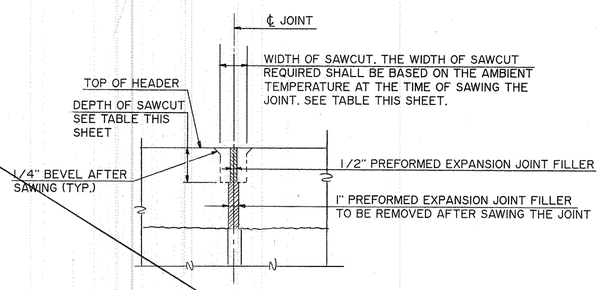

- IT IS IMPORTANT THAT THE JOINT BE CONSTRUCTED EXACTLY AS DETAILED.
- SAWCUTTING WILL BE PERMITTED SEVEN DAYS AFTER THE FINAL POUR AT THE JOINT.
- THE COMPRESSION SEAL SHALL NOT BE INSTALLED AT TEMPERATURES ABOVE THOSE AT WHICH THE WIDTH OF THE JOINT IS LESS THAN 60% OF THE NOMINAL WIDTH OF THE SEAL.
- THE ELASTOMER SHALL BE CONTINUOUS FOR ITS COMPLETE LENGTH. JOINT SHALL BE CLEANED AND SAND BLASTED PRIOR TO INSTALLATION OF THE ELASTOMER.

JOINT DETAILS FOR ELASTOMERIC COMPRESSION SEAL

N. T. S.

"THIS SHEET DELETED SEE STRUCTURE SHEET NO. 15-1"
DATE: 3-8-93

THIS SHEET NOT CORRECTED

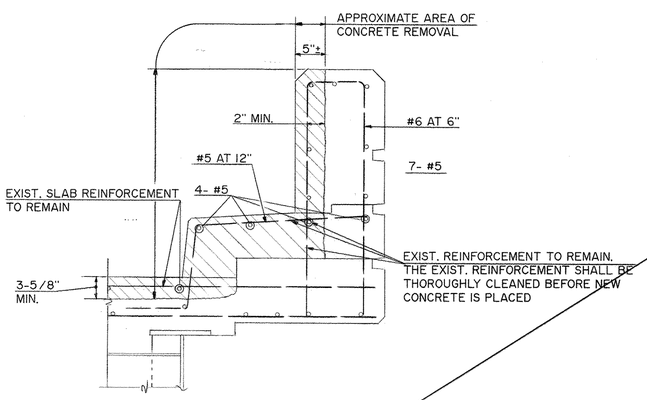

SECTION A-A

EXISTING CONDITION

SCALE: 1" = 1'-0"

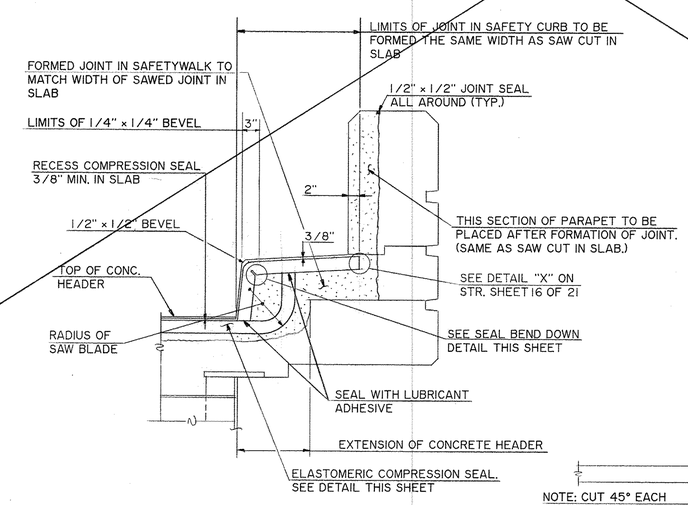

SECTION B-B

FINAL CONDITION

SCALE: 1" = 1'-0"

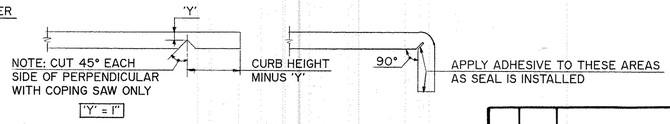

SEAL BEND DOWN AT SAFETYWALK ONLY

N. T. S.

COMPRESSION SEAL DETAILS AT EXISTING PARAPET

NO.	DATE	DESCRIPTION

STATE OF CONNECTICUT - DEPT. OF TRANSPORTATION

FORM NO. ENG. 158 ED 3-86

F.H.W.A. REGION NO.	STATE	TOWN	FED. AID PROJ. NO.	PROJ. NO.	YEAR	ROUTE NO.	SHEET NO.	TOTAL SHEETS
1	CONN.	WETHERSFIELD	FAP F-71(107)	159-164	1991	I-91/3	118-1	219

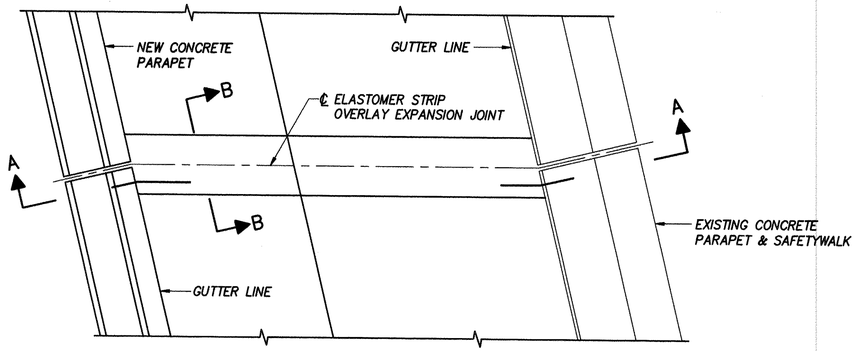

PARTIAL PLAN BRIDGE DECK AT EXPANSION JOINT

NOT TO SCALE

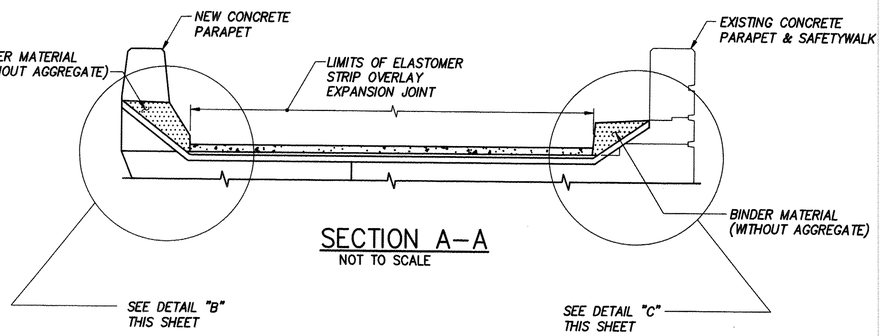

SECTION A–A

NOT TO SCALE

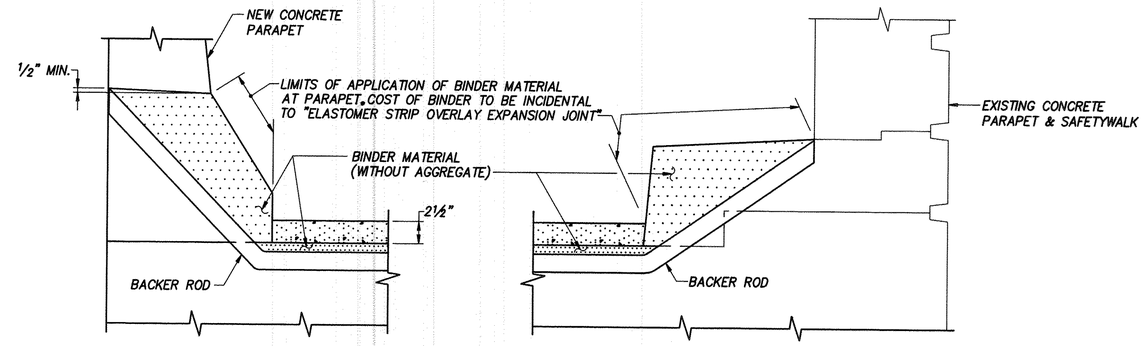

DETAIL B

SCALE: 1 1/2" = 1'–0"

DETAIL C

SCALE: 1 1/2" = 1'–0"

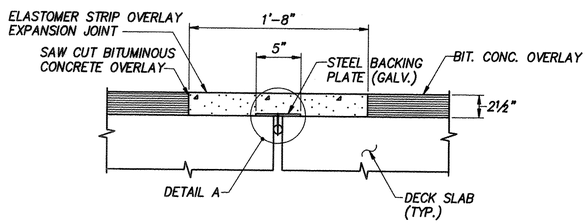

SECTION B–B

SCALE: 1 1/2" = 1'–0"

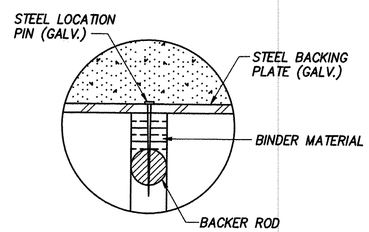

DETAIL A

N.T.S.

THIS SHEET NOT CORRECTED

"THIS SHEET REPLACES STRUCTURE SHEET NO. 15"

DATE: 3/8/93

THE INFORMATION, INCLUDING ESTIMATED QUANTITIES OF WORK SHOWN ON THESE SHEETS IS BASED ON LIMITED INVESTIGATIONS BY THE STATE AND IS IN NO WAY WARRANTED TO INDICATE THE TRUE CONDITIONS OR ACTUAL QUANTITIES OR DISTRIBUTION OF QUANTITIES OF WORK WHICH WILL BE REQUIRED.

NO.	DATE	DESCRIPTION

REVISIONS

CONNECTICUT
DEPARTMENT OF TRANSPORTATION

WETHERSFIELD

MODERNIZATION OF ROUTES I–91/3 INTERCHANGE
WIDENING OF I–95 SOUTHBOUND OVER ELM STREET

PARTIAL PLAN AND SECTION AT EXPANSION JOINT

ENGINEER H. W. LOCHNER, INC.

DESIGNER R.J.F. DRAFTER R.J.F. CHECKER L.E.

APPROVED [signature] DATE 3/93

STRUCTURE NO. 159-164-5 BRIDGE LOG NO. 01457 STRUCTURE SHEET NO. 15-1 OF 21

159-164 449-01 118-

FORM NO. ENG. 158 ED 4-80

F.H.W.A. REGION	STATE	TOWN	FED. AID PROJ. NO.	PROJ. NO.	YEAR	ROUTE NO.	SHEET NO.	TOTAL SHEETS
1	CONN.	WETHERSFIELD	FAP F-7(1107)	159-164	1991	I-91/3	119	219

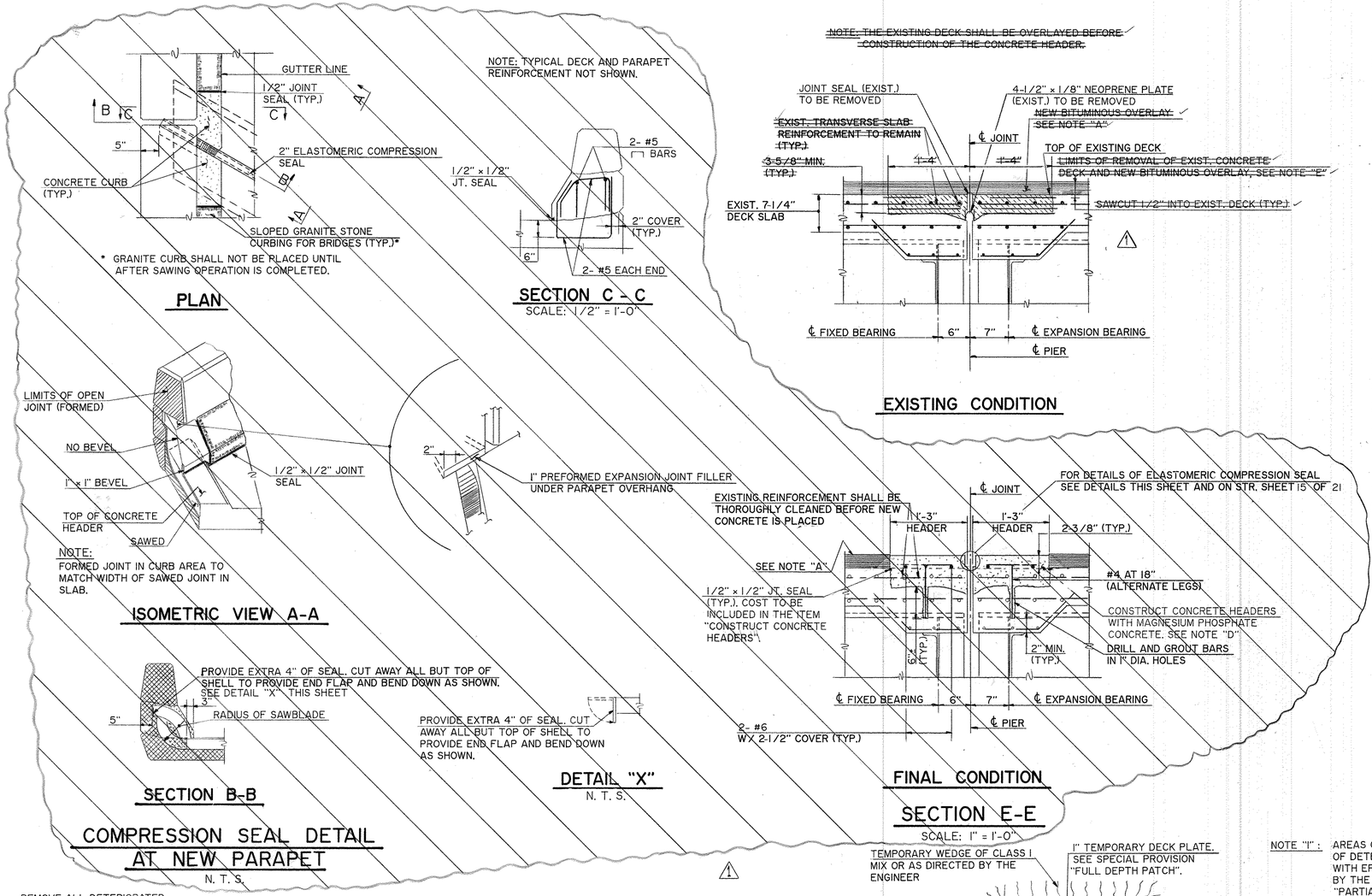

NOTE "A": 1-1/2" BITUMINOUS CONCRETE CLASS (I) ON 1" BITUMINOUS CONCRETE CLASS (I2) OVER MEMBRANE WATERPROOFING (SHEET).

NOTE "B": WHEN THE DEPTH OF CONCRETE REMOVAL EXCEEDS TWO THIRDS OF THE THICKNESS OF THE DECK, THE REMAINING CONCRETE SHALL BE REMOVED, AND REPAIRED AS "FULL DEPTH PATCH", SEE DETAIL THIS SHEET.

NOTE "C": WHEN MORE THAN 50% OF THE DECK SURFACE WITHIN ANY SPAN REQUIRES FULL DEPTH PATCHING, THE DECK SHALL BE COMPLETELY REMOVED AND REPLACED IN THAT SPAN.

NOTE "D": THE COST OF PLACING CONCRETE HEADERS AT JOINTS OVER THE PIERS SHALL BE INCLUDED IN THE CONTRACT UNIT PRICE PER BAG FOR, "CONSTRUCT CONCRETE HEADERS", SEE SPECIAL PROVISIONS.

NOTE "E": THE COST OF REMOVAL OF EXISTING CONCRETE DECK AND NEW BITUMINOUS OVERLAY SHALL BE INCLUDED IN THE CONTRACT UNIT PRICE PER BAG FOR, "CONSTRUCT CONCRETE HEADERS", SEE SPECIAL PROVISIONS.

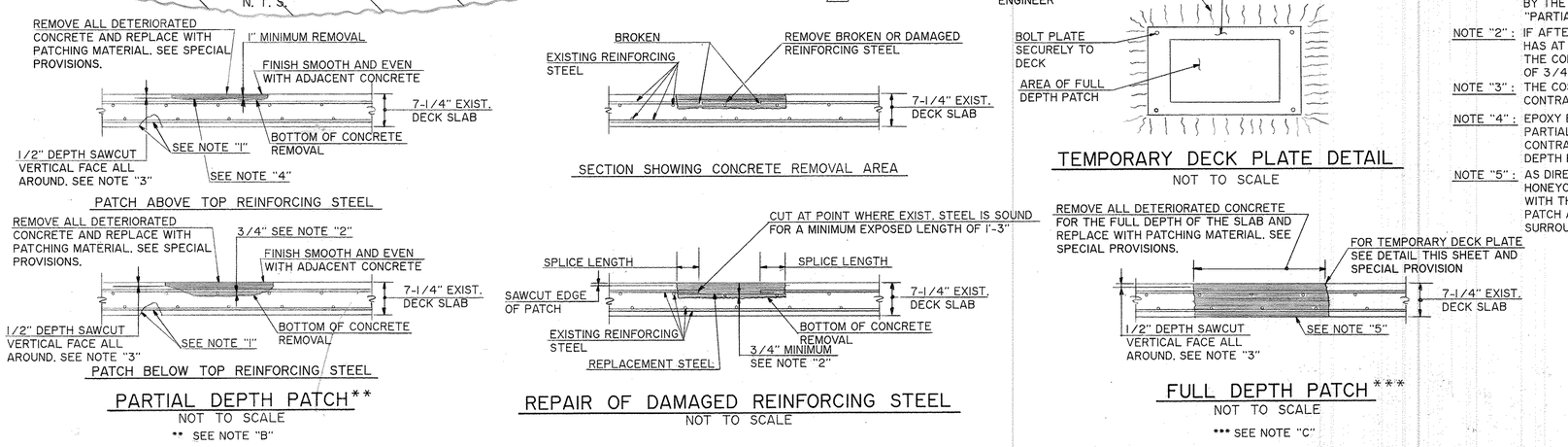

NOTE "1": AREAS OF POP-OUTS CAUSED BY THE REMOVAL OF DETERIORATED CONCRETE TO BE COATED WITH EPOXY RESIN SYSTEM WHERE DIRECTED BY BY THE ENGINEER. (SEE SPECIAL PROVISION FOR "PARTIAL DEPTH PATCH".)

NOTE "2": IF AFTER CONCRETE REMOVAL THE REINFORCING STEEL HAS AT LEAST ONE HALF IT'S SURFACE AREA EXPOSED, THE CONCRETE SHALL BE FURTHER REMOVED TO A DEPTH OF 3/4" AROUND THE STEEL.

NOTE "3": THE COST 1/2" DEPTH SAWCUT SHALL BE INCLUDED IN THE CONTRACT BID PRICE OF THE APPLICABLE REPAIR PAY ITEM.

NOTE "4": EPOXY BONDING COMPOUND SHALL BE APPLIED TO PARTIALLY EXPOSED BARS AND INCLUDED IN THE CONTRACT UNIT PRICE PER BAG FOR, "PARTIAL DEPTH PATCH".

NOTE "5": AS DIRECTED BY THE ENGINEER, ALL VOIDS AND HONEYCOMB ON THIS SURFACE SHALL BE FILLED WITH THE SAME MATERIAL AS USED FOR FULL DEPTH PATCH AND FINISHED TO CONFORM TO THE SURROUNDING CONCRETE SURFACE.

THIS SHEET NOT CORRECTED

THIS SHEET NOT CORRECTED

NO.	DATE	DESCRIPTION
1	3-8-93	CHANGES TO DECK JT.

REVISIONS

CONNECTICUT
DEPARTMENT OF TRANSPORTATION

WETHERSFIELD

MODERNIZATION OF ROUTES I-91/3 INTERCHANGE
WIDENING OF I-91 SOUTHBOUND
OVER
ELM STREET

SLAB AND COMPRESSION SEAL DETAILS

ENGINEER H. W. LOCHNER, INC., BY L-C ASSOCIATES, INC.
DESIGNER A. S. D. | DRAFTER A. S. D. | CHECKER F. S. C.
APPROVED [signature] | DATE 1/15/90
STRUCTURE NO. 159-164-5 | BRIDGE LOG NO. 01457 | STRUCTURE SHEET NO. 16 OF 21

159-164

449-01

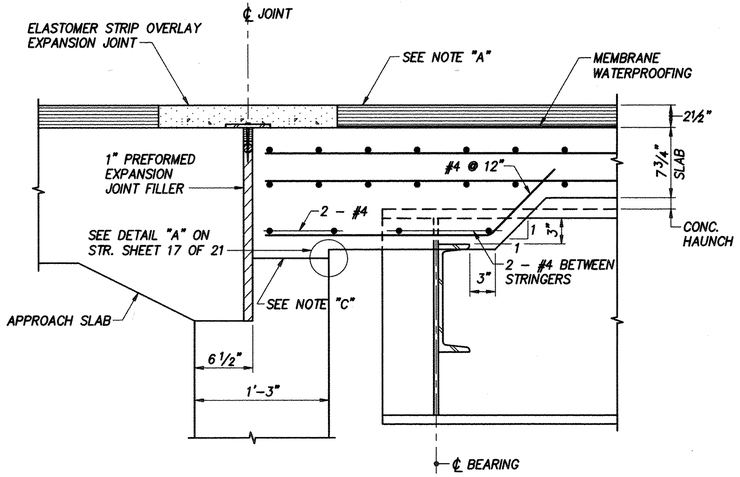

SECTION B-B

SCALE: 1½" = 1'-0"

NOTE:

FOR DETAILS OF EXPANSION JOINT SEE STR. SHEET 15-1 OF 21

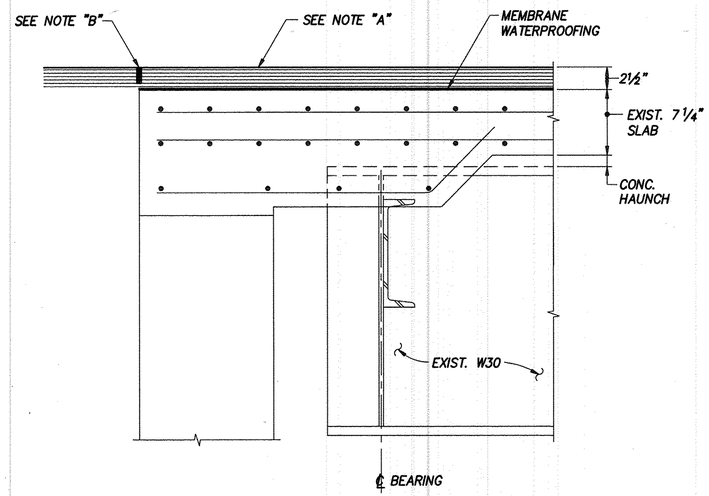

SECTION C-C

SCALE: 1½" = 1'-0"

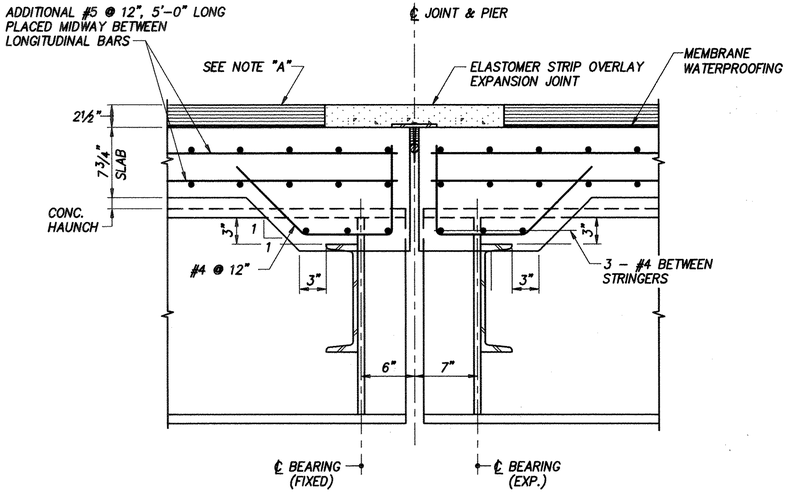

SECTION D-D

SCALE: 1½" = 1'-0"

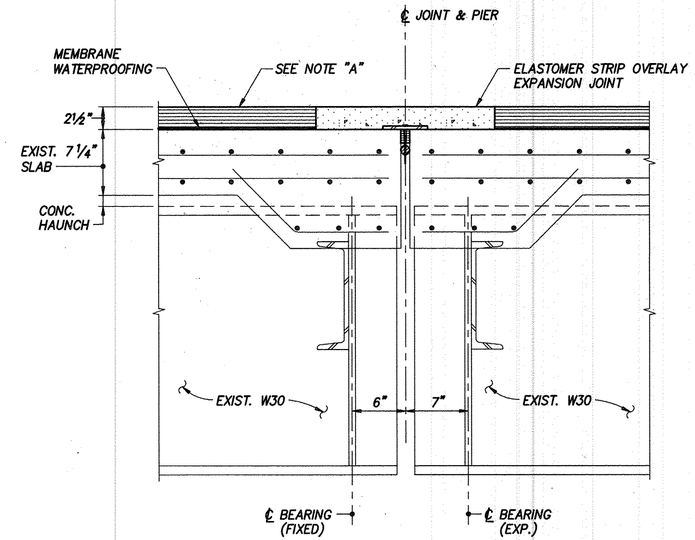

SECTION E-E

SCALE: 1½" = 1'-0"

NOTES:

NOTE "A" 1½" BITUMINOUS CONCRETE CLASS (1) ON 1" BITUMINOUS CONCRETE CLASS (12) OVER MEMBRANE WATERPROOFING (SHEET).

NOTE "B" CUT OVERLAY WITH A ⅜" x 1¾" KERF AND FILL WITH A POURABLE SEALANT. COST OF CUTTING AND SEALING TO BE INCLUDED IN THE CONTRACT UNIT PRICE PER LINEAR FOOT FOR, "SAWING AND SEALING JOINTS".

NOTE "C" TROWEL TO SMOOTH FINISH AND PLACE 2 LAYERS OF # 15 ROOFING FELT.

THIS SHEET NOT CORRECTED

"THIS SHEET ADDED"

DATE: 3/8/93

THIS SHEET NOT CORRECTED

THE INFORMATION, INCLUDING ESTIMATED QUANTITIES OF WORK SHOWN ON THESE SHEETS IS BASED ON LIMITED INVESTIGATIONS BY THE STATE AND IS IN NO WAY WARRANTED TO INDICATE THE TRUE CONDITIONS OR ACTUAL QUANTITIES OR DISTRIBUTION OF QUANTITIES OF WORK WHICH WILL BE REQUIRED.

NO.	DATE	DESCRIPTION

REVISIONS

CONNECTICUT
DEPARTMENT OF TRANSPORTATION

WETHERSFIELD

MODERNIZATION OF ROUTES I-91/3 INTERCHANGE
WIDENING OF I-95 SOUTHBOUND OVER ELM STREET

EXPANSION JOINT DETAILS

ENGINEER H. W. LOCHNER, INC.

DESIGNER R.J.F. | DRAFTER R.J.F. | CHECKER L.E.

APPROVED [signature] | DATE 3/93

STRUCTURE NO. 159-164-5 | BRIDGE LOG NO. 01457 | STRUCTURE SHEET NO. 16-1 OF 21

159-164

449-01

STATE OF CONNECTICUT - DEPT. OF TRANSPORTATION

FORM NO ENG 15A ED. 1-88

F.H.W.A. REGION NO.	STATE	TOWN	FED. AID PROJ. NO.	PROJ. NO.	YEAR	ROUTE NO.	SHEET NO.	TOTAL SHEETS
I	CONN.	WETHERSFIELD	FAP F-71(107)	159-164	1991	I-91/3	120	219

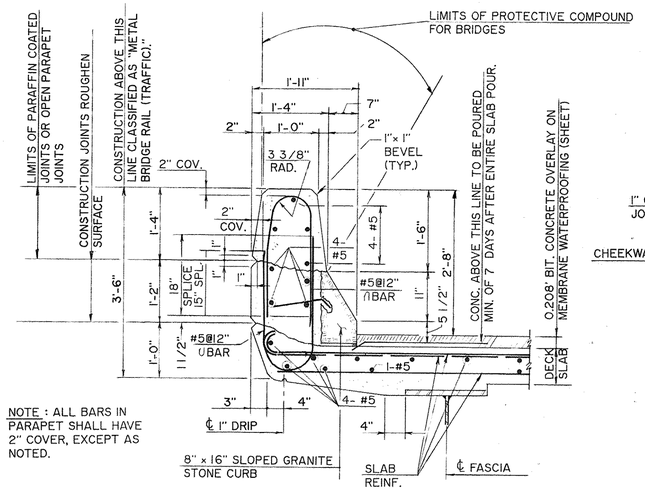

NOTE : ALL BARS IN PARAPET SHALL HAVE 2" COVER, EXCEPT AS NOTED.

PARAPET AND SLOPED CURB DETAIL

SCALE 3/4" = 1' - 0"

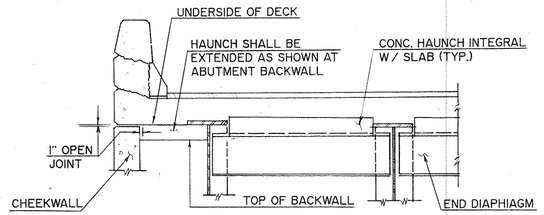

NOTE : REINFORCEMENT NOT SHOWN.

TRANSVERSE SECTION

NOT TO SCALE

NOTE: TIE DOWN BARS DO NOT EXCLUDE THE USE OF CHAIRS FOR SUPPORTING THE REINFORCEMENT MAT. THE COST OF FURNISHING AND PLACING TIE DOWN BARS TO BE INCLUDED IN THE CONTRACT UNIT PRICE PER POUND FOR, "DEFORMED STEEL BARS - EPOXY COATED."

TIE DOWN DETAIL

N. T. S.

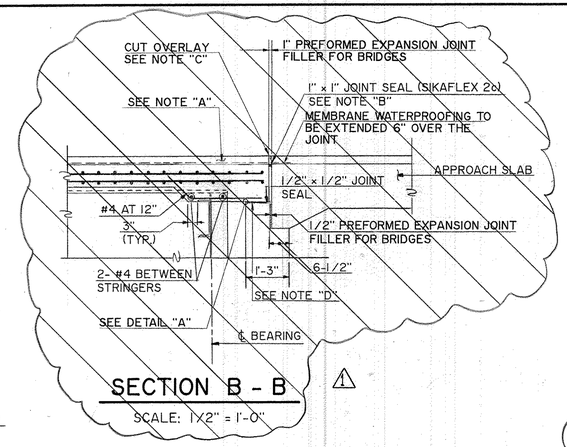

SECTION B - B

SCALE: 1/2" = 1'-0"

NOTE "A" ~~1-1/2" BITUMINOUS CONCRETE CLASS - 1 ON 1" BITUMINOUS CONCRETE CLASS - 12 ON MEMBRANE WATERPROOFING (SHEET).~~

NOTE "B" ~~JOINT SEAL AND JOINT FILLER TO BE SEPERATED WITH ALUMINUM FOIL. COST OF FURNISHING AND INSTALLING ALUMINUM FOIL TO BE INCLUDED IN THE CONTRACT UNIT PER CUBIC YARD FOR, "CLASS "F" CONCRETE."~~

NOTE "C" ~~CUT OVERLAY WITH A 3/8" x 1-3/4" KERF AND FILL WITH A POURABLE SEALANT. COST OF CUTTING AND SEALING TO BE INCLUDED IN THE CONTRACT UNIT PRICE PER LINEAR FOOT FOR, "SAWING AND SEALING JOINTS."~~

NOTE "D" TROWEL TO SMOOTH FINISH AND PLACE 2 LAYERS OF 15# ROOFING FELT.

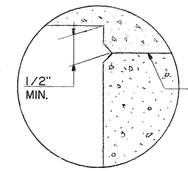

DETAIL "A"

N.T.S.

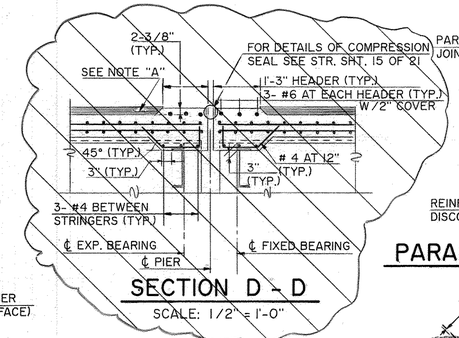

SECTION D - D

SCALE: 1/2" = 1'-0"

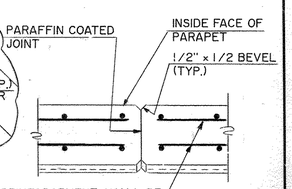

PARAPET JOINT DETAILS

N. T. S.

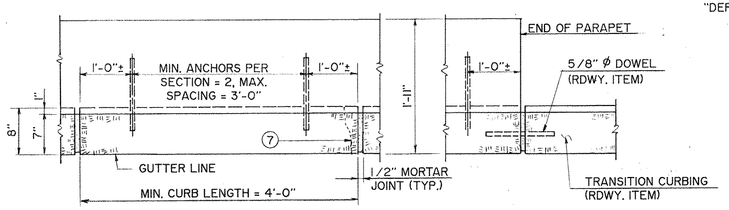

PLAN

NOT TO SCALE

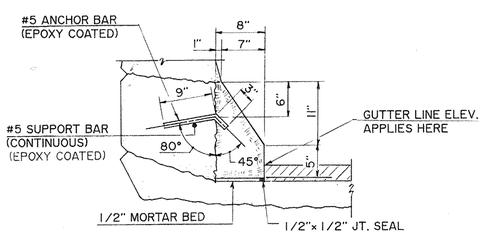

CURB SECTION

SCALE 1" = 1' - 0"

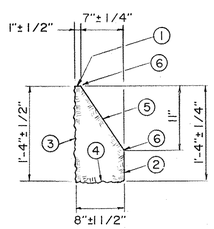

TOLERANCES

TOLERANCES NOTES

1. SAWED SURFACE APPROXIMATING A TRUE PLANE WITH NO PROJECTIONS OR DEPRESSIONS GREATER THAN 1/4".
2. SMOOTH, QUARRY SPLIT SURFACE, FREE OF DRILL HOLES, WITH PROJECTIONS OR DEPRESSIONS NOT OVER 1/2".
3. SPLIT SURFACE SHALL BE FREE OF ANY PROJECTIONS OVER 1".
4. SAWED OR SPLIT SURFACE APPROXIMATING A TRUE PLANE TO THE SPECIFIED DIMENSIONS WITH PROJECTION NO GREATER THAN 1/4".
5. SAWED SURFACE FREE OF ALL QUARRY SAWING AND CUTTING MARKS WITH ALLOWABLE DEPRESSION OR PROJECTION NOT OVER 1/4".
6. THIS ARRIS LINES SHALL BE STRAIGHT AND TRUE WITHIN A TOLERANCE OF ±1/4".
7. ENDS OF STONES AT INTERMEDIATE JOINTS SHALL BE HELD FULL FOR 2" FROM ALL EXPOSED SURFACES WITH A PERMITTED VARIATION OF 1/4". BEYOND THIS AREA THE JOINT MAY FALL AWAY A MAX. OF 3".

SLOPED GRANITE CURB DETAILS

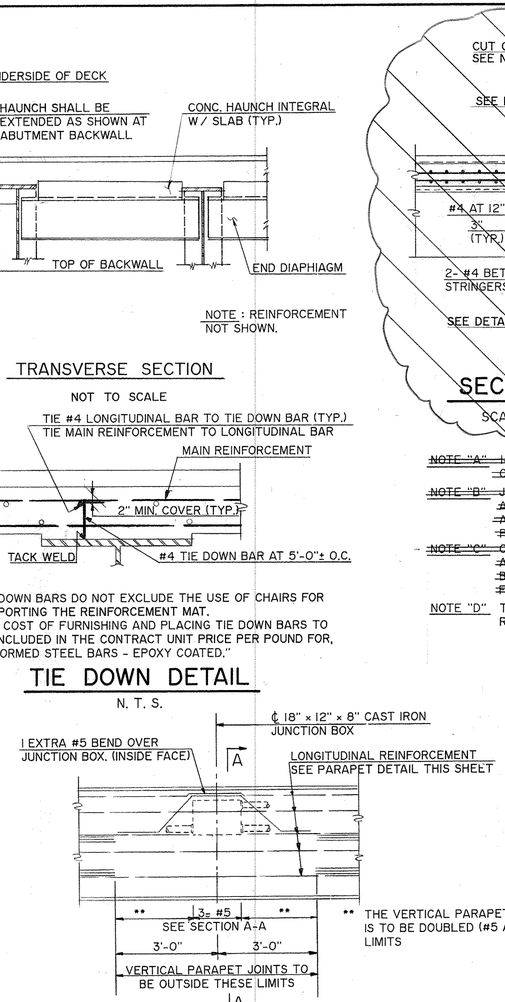

** THE VERTICAL PARAPET REINFORCEMENT IS TO BE DOUBLED (#5 AT 6") WITHIN THESE LIMITS

ELEVATION

SECTION A - A

PARAPET REINFORCEMENT AT JUNCTION BOX

N. T. S.

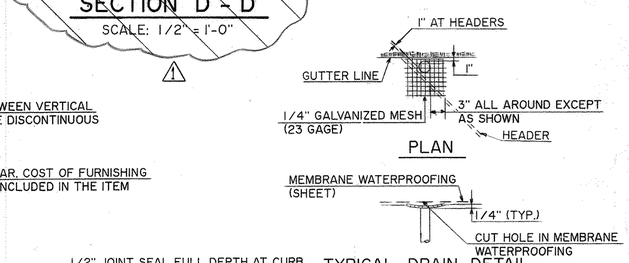

TYPICAL DRAIN DETAIL

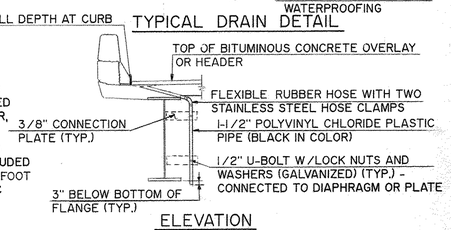

ELEVATION

OVERLAY INTERFACE DRAINAGE DETAILS

N. T. S.

NOTE:

THE COST OF FURNISHING AND INSTALLING 1/4" GALVANIZED MESH SHALL BE INCLUDED IN THE CONTRACT UNIT PRICE PER TON FOR, "BITUMINOUS CONCRETE - CLASS 12."

THE COST OF FURNISHING AND INSTALLING 3/8" CONNECTION PLATES SHALL BE INCLUDED IN THE CONTRACT UNIT PRICE PER LINEAR FOOT FOR, "1-1/2" POLYVINYL CHLORIDE PLASTIC PIPE."

1-1/2" POLYVINYL CHLORIDE PLASTIC PIPE DRAINS SHALL BE PLACED THRU THE DECK SLAB WHERE SHOWN ON THE PLANS. SEE STR. SHEET 14 OF 21

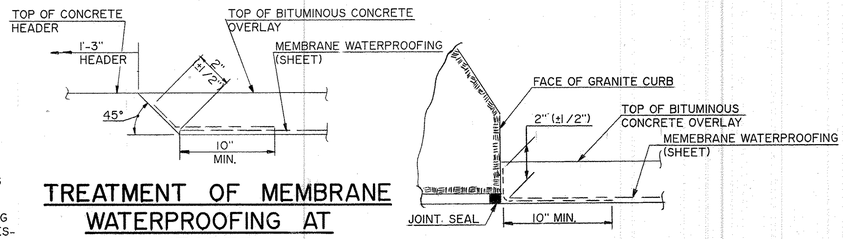

TREATMENT OF MEMBRANE WATERPROOFING AT HEADER

N.T.S.

TREATMENT OF MEMBRANE WATERPROOFING AT GUTTER

N. T. S.

THIS SHEET NOT CORRECTED

NO.	DATE	DESCRIPTION
1	3-8-93	CHANGES TO DECK JT.

REVISIONS

STATE OF CONNECTICUT
DEPARTMENT OF TRANSPORTATION

WETHERSFIELD

MODERNIZATION OF ROUTES I-91/3 INTERCHANGE
WIDENING OF I - 91 SOUTHBOUND
OVER
ELM STREET

SLAB DETAILS

ENGINEER H. W. LOCHNER, INC., BY L-C ASSOCIATES, INC.
DESIGNER A. S. D. | DRAFTER A. S. D. | CHECKER F. S. C.
APPROVED [signature] | DATE 10/27/89
STRUCTURE NO. 159-164-5 | BRIDGE LOG NO. 01457 | STRUCTURE SHEET NO. 17 OF 21

159-164

449-01

STATE OF CONNECTICUT - DEPT. OF TRANSPORTATION

FORM NO. ENG. 158 ED 3-86

F.H.W.A. REGION NO.	STATE	TOWN	FED. AID PROJ. NO.	PROJ. NO.	YEAR	ROUTE NO.	SHEET NO.	TOTAL SHEETS
1	CONN.	WETHERSFIELD	FAP F-7(107)	159-164	1991	I-91/3	121	219

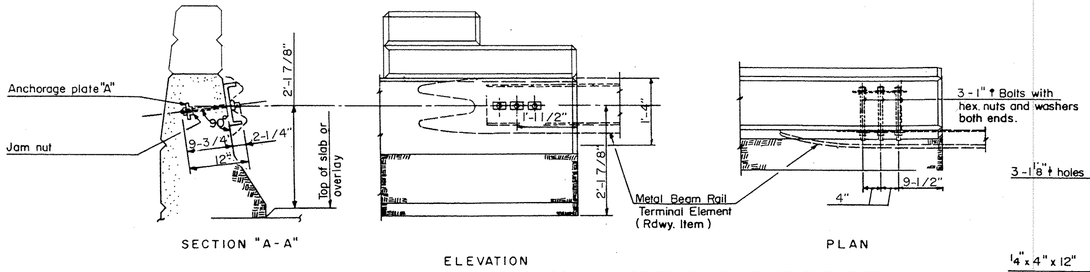

SECTION "A-A" ELEVATION PLAN

METAL BEAM RAIL (TYPE R-I) ANCHORED TO FACE OF PARAPET (SLOPED CURB)

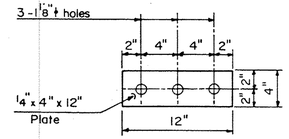

— ANCHORAGE PLATE "A" —

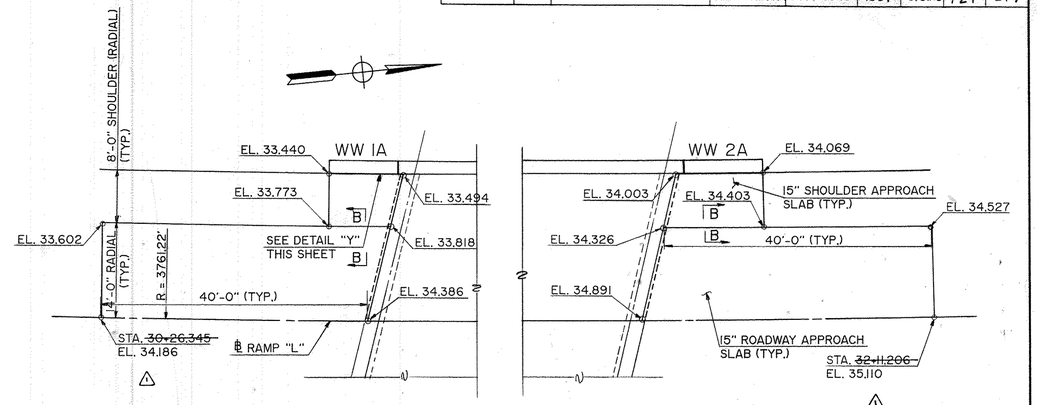

APPROACH SLAB PLAN

SCALE: 3/32" = 1'-0"

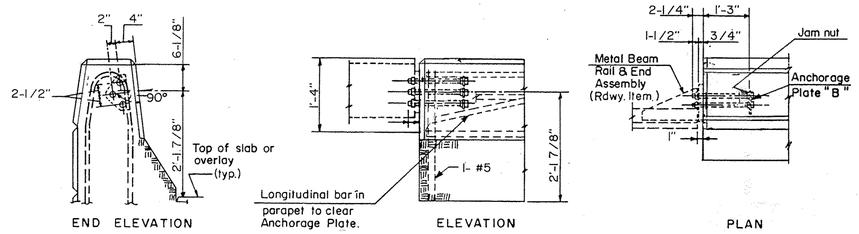

END ELEVATION ELEVATION PLAN

METAL BEAM RAIL (TYPE R-I) ANCHORED TO END OF PARAPET (SLOPED CURB)

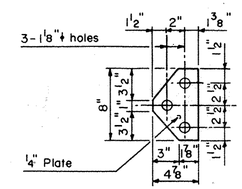

ANCHORAGE PLATE "B"

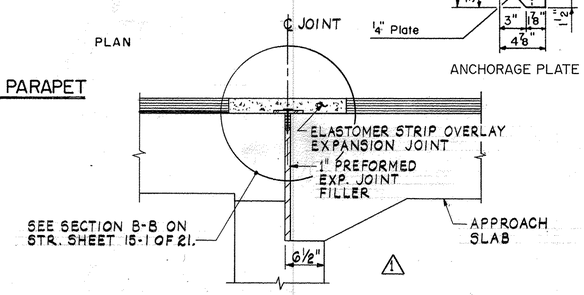

DETAIL "B"

N.T.S.

~~NOTE "A": CUT OVERLAY WITH A 3/8" x 1-3/4" KERF AND FILL WITH A POURABLE SEALANT. COST OF CUTTING AND SEALING TO BE INCLUDED IN THE CONTRACT UNIT PRICE PER LINEAR FOOT FOR, "SAWING AND SEALING JOINTS."~~

NOTE "B": 2-1/2" BITUMINOUS CONCRETE OVERLAY OVER "MATERIAL FOR TACK COAT." (ROADWAY ITEM)

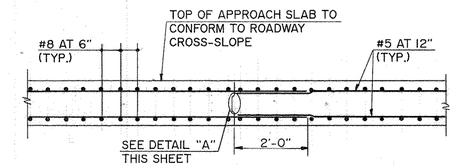

SECTION B - B

SCALE: 1/2" = 1'-0"

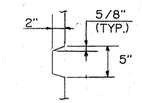

DETAIL "A"

N. T. S.

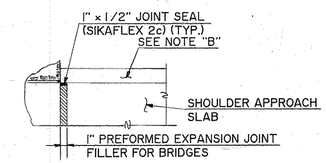

DETAIL "Y"

N. T. S.

ANCHORAGE NOTES:

* ANCHOR BOLTS SHALL CONFORM TO REQUIREMENTS OF ASTM A449 WITH NUTS AND WASHERS CONFORMING TO A563 GRADE B.
* ANCHOR BOLTS, NUTS AND WASHERS SHALL BE GALVANIZED IN CONFORMANCE WITH REQUIREMENTS OF ASTM A153. ANCHORAGE PLATES SHALL CONFORM TO THE REQUIREMENTS OF ASTM A709 GRADE 36. ALL ANCHORAGE MATERIAL WILL BE PAID FOR AT THE CONTRACT UNIT PRICE PER POUND FOR, " DEFORMED STEEL BARS ".

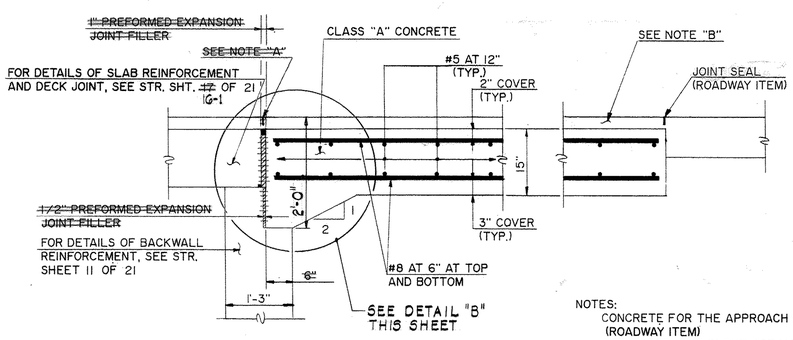

NOTES:

CONCRETE FOR THE APPROACH SLAB SHALL BE " CLASS "A" CONCRETE." (ROADWAY ITEM)

REINFORCEMENT IN THE TOP MAT OF THE APPROACH SLAB SHALL BE EPOXY COATED. THE COST OF FURNISHING AND PLACING REINFORCEMENT IN THE TOP AND BOTTOM MAT OF THE APPROACH SLAB SHALL BE INCLUDED IN THE CONTRACT UNIT PRICE FOR, "DEFORMED STEEL BARS - EPOXY COATED" AND "DEFORMED STEEL BARS" RESPECTIVELY. (ROADWAY ITEMS)

APPROACH SLAB DETAILS

SCALE: 3/4" = 1'-0"

△ - As Built Information - Aug 1995

NO.	DATE	DESCRIPTION
△	3-8-93	CHANGES TO DECK JT.

REVISIONS

CONNECTICUT
DEPARTMENT OF TRANSPORTATION

WETHERSFIELD

MODERNIZATION OF ROUTES I-91/3 INTERCHANGE
WIDENING OF I - 91 SOUTHBOUND
OVER
ELM STREET

MISCELLANEOUS DETAILS

ENGINEER H. W. LOCHNER, INC., BY L-C ASSOCIATES, INC.

DESIGNER A. S. D. | DRAFTER A. S. D. | CHECKER F. S. C.

APPROVED [signature] DATE 1/15/90

STRUCTURE NO. 159-164-5 | BRIDGE LOG NO. 01457 | STRUCTURE SHEET NO. 18 OF 21

159-164

449-01

121

STATE OF CONNECTICUT - DEPT. OF TRANSPORTATION

FORM NO ENG 15A ED 4-80

F.H.W.A. REGION	STATE	TOWN	FED. AID PROJ. NO.	PROJ. NO.	YEAR	ROUTE NO.	SHEET NO.	TOTAL SHEETS
1	CONN.	WETHERSFIELD	FAP F-7(107)	159-164	1991	I-91/3	122	219

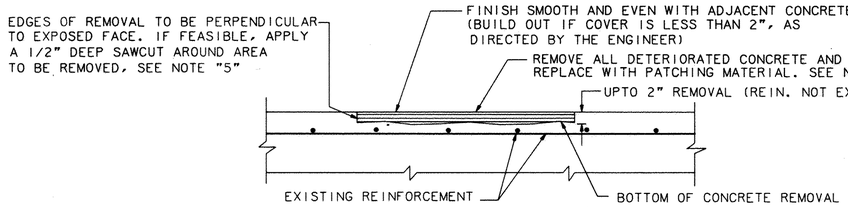

PATCH ABOVE TOP REINFORCING STEEL
NOT TO SCALE

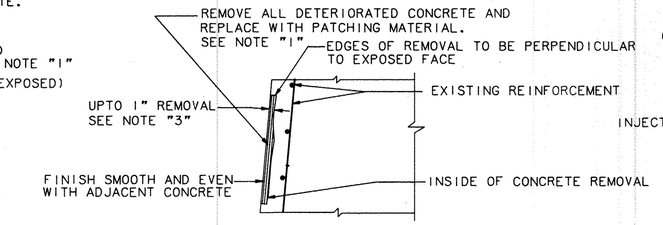

REPAIR OF SHALLOW DEPTHS
(UPTO 1" REMOVAL)
NOT TO SCALE

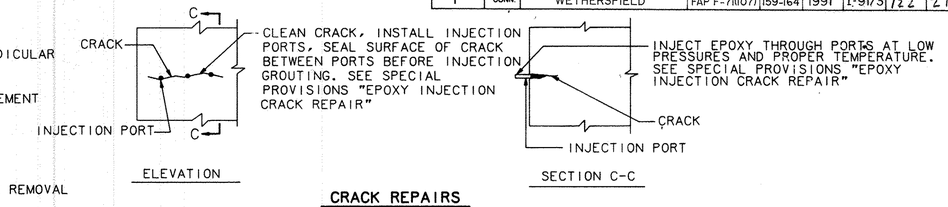

CRACK REPAIRS
NOT TO SCALE

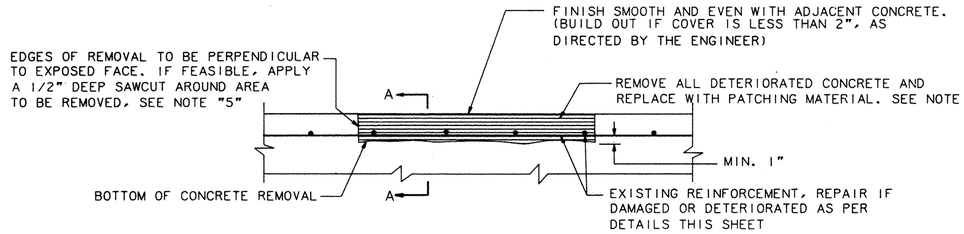

PATCH BELOW TOP REINFORCING STEEL
NOT TO SCALE

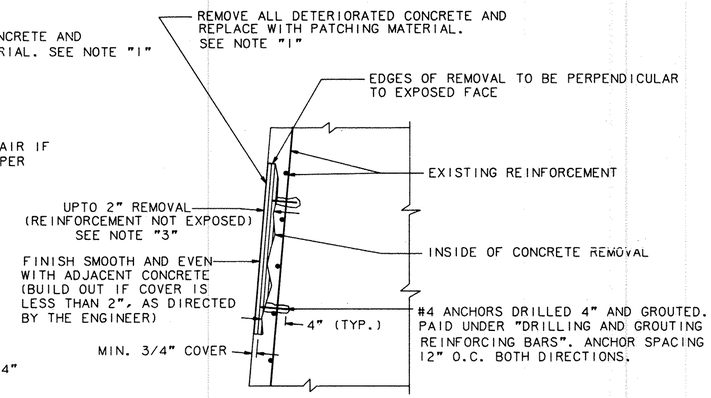

REPAIRS OF DEPTHS MORE THAN 1" AND UPTO 2"
NOT TO SCALE

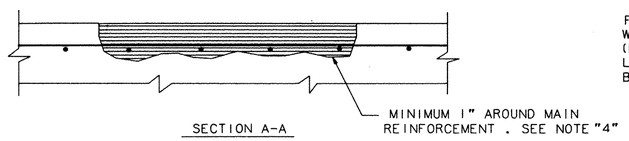

SECTION A-A

PARTIAL DEPTH PATCH
N. T. S.

NOTES

NOTE "1" : TYPES AND METHODS OF CONCRETE REPAIRS

(a) CONCRETE PATCHING :

(i) TOP AND VERTICAL SURFACES

FOR DETERIORATED AREAS AT LEAST 1" .IN DEPTH, AND OVER 4 S. F. REPAIR USING "CLASS "S" CONCRETE", SEE SPECIAL PROVISIONS.

FOR SMALL DETERIORATED AREAS LESS THAN 1" IN DEPTH, AND UPTO 4 S. F. REPAIR USING "COPOLYMER CEMENTITIOUS MORTAR PATCH". SEE SPECIAL PROVISIONS

(b) CRACK REPAIR

IN ABUTMENTS AND WINGWALLS

CRACKS WITH WIDTHS GREATER THAN OR EQUAL TO 0.005": CONCRETE AROUND THE CRACKS SHALL BE CHIPPED OUT AND PATCHED WITH, "COPOLYMER CEMENTITIOUS MORTAR PATCH", OR "CLASS "S" CONCRETE." SEE SPECIAL PROVISIONS.
CRACKS WITH WIDTHS LESS THAN 0.005" SHALL BE CLEANED AND SEALED WITH "PROTECTIVE COMPOUND FOR BRIDGES". SEE SPECIAL PROVISIONS.

IN PIERS

CRACKS WITH WIDTHS EQUAL TO OR GREATER THAN 0.005" WILL BE REPAIRED BY INJECTION GROUTING. SEE SPECIAL PROVISION "EPOXY INJECTION CRACK REPAIR.
CRACKS LESS THAN 0.005" IN WIDTH WILL NOT BE REPAIRED BUT WILL BE SEALED BY THE APPLICATION OF "PROTECTIVE COMPOUND FOR BRIDGES", AFTER ALL CONCRETE REPAIRS HAVE BEEN COMPLETED.

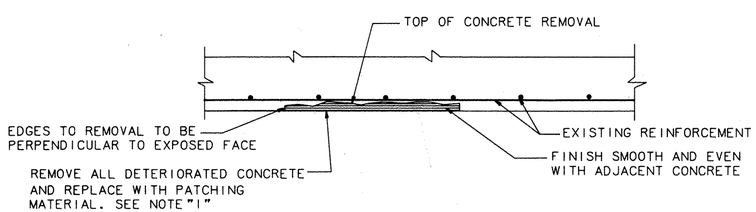

OVERHEAD SURFACE PATCHING
NOT TO SCALE

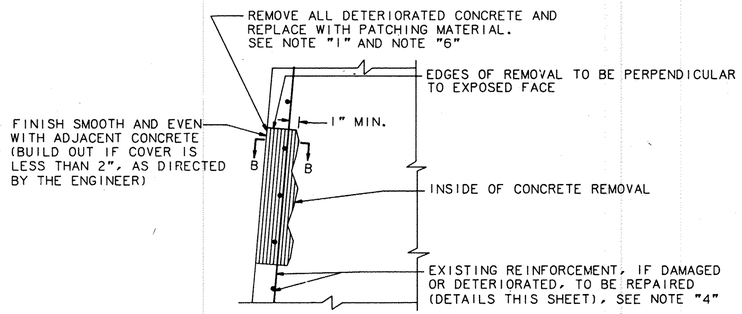

REPAIRS OF DEPTHS OVER 2" (REINF. EXPOSED)
NOT TO SCALE

NOTE "3" : IN AREAS WHERE THE REINFORCING STEEL, ON REMOVAL OF DETERIORATED CONCRETE, HAS LESS THAN HALF OF ITS SURFACE EXPOSED, THE REINFORCEMENT SHALL BE COATED WITH EPOXY BONDING COMPOUND PRIOR TO PLACING THE PATCHING MATERIAL. THE COST OF THIS COATING IS INCLUDED IN THE APPLICABLE REPAIR PAY ITEM.

NOTE "4" : IF AFTER CONCRETE REMOVAL THE REINFORCING STEEL HAS AT LEAST ONE HALF OF ITS SURFACE AREA EXPOSED, THE CONCRETE SHALL BE FURTHER REMOVED TO A DEPTH OF 1" AROUND THE STEEL.

NOTE "5" : THE 1/2" DEPTH SAWCUT SHALL BE INCLUDED IN THE CONTRACT BID PRICE OF THE APPLICABLE REPAIR PAY ITEM.

NOTE "6" : IF THE AREA OR DEPTH OF REMOVAL IS DEEMED TO BE EXCESSIVE, THE ENGINEER SHALL BE IMMEDIATELY NOTIFIED BEFORE CONTINUING REMOVAL WORK.

THIS SHEET NOT CORRECTED

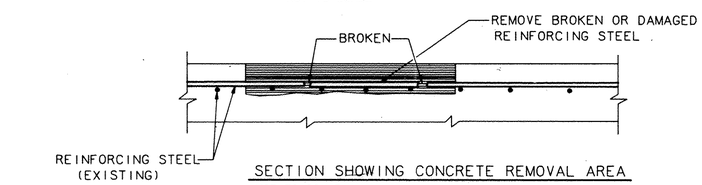

SECTION SHOWING CONCRETE REMOVAL AREA
NOT TO SCALE

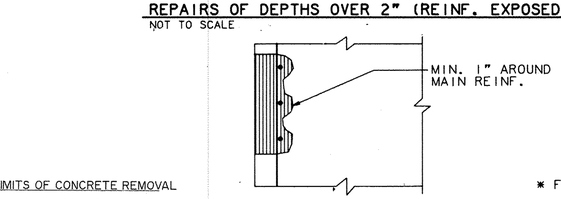

SECTION B-B

VERTICAL SURFACE REPAIRS
NOT TO SCALE

TABLE OF SPLICE LENGTH

	BAR SIZE	MIN. SPLICE LENGTH
MAIN REINF. @ ≥ 6"O.C. *	#6 #7 #8	1'- 9" 2'- 4" 3'- 0"
TRANS. REINF. @ ≥ 6"O.C. *	#4 #5	1'- 4" 1'- 4"

* FOR BARS SPACED < 6" O.C. MULTIPLY TABLE VALUES BY 1.25

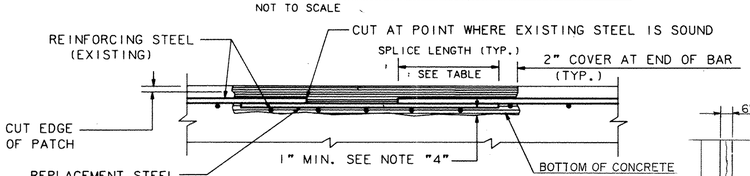

REPAIR OF DAMAGED REINFORCING STEEL
NOT TO SCALE

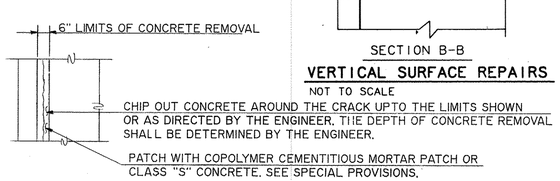

CRACK REPAIR IN ABUTMENTS AND WINGWALLS
(GREATER THAN 0.005")
NOT TO SCALE

THE INFORMATION, INCLUDING ESTIMATED QUANTITIES OF WORK SHOWN ON THESE SHEETS IS BASED ON LIMITED INVESTIGATIONS BY THE STATE AND IS IN NO WAY WARRANTED TO INDICATE THE TRUE CONDITIONS OR ACTUAL QUANTITIES OR DISTRIBUTION OF QUANTITIES OF WORK WHICH WILL BE REQUIRED.

NO.	DATE	DESCRIPTION

REVISIONS

STATE OF CONNECTICUT
DEPARTMENT OF TRANSPORTATION

WETHERSFIELD

MODERNIZATION OF ROUTES I-91/3 INTERCHANGE
WIDENING OF I - 91 SOUTHBOUND
OVER
ELM STREET

SUBSTRUCTURE REPAIR DETAILS

ENGINEER H. W. LOCHNER, INC., BY L-C ASSOCIATES, INC.
DESIGNER A. S. D. **DRAFTER** A. S. D. **CHECKER** F. S. C.
APPROVED J. E. J. Chevney **DATE** 10/27/88
STRUCTURE NO. 159-164-5 BRIDGE LOG NO. 01457 STRUCTURE SHEET NO. 19 OF 21

JOSEPH MERRITT & CO.

159-164

449-01

127

FHWA DIV. OFF	STATE	TOWN	FED. AID PROJ. NO.	PROJ. NO.	YEAR	ROUTE NO.	SHEET NO.	TOTAL SHEETS
1	CONN.	WETHERSFIELD		159-164	1991	I-91/3	123	219

FORM NO. ENG. 15 ED. 6-60

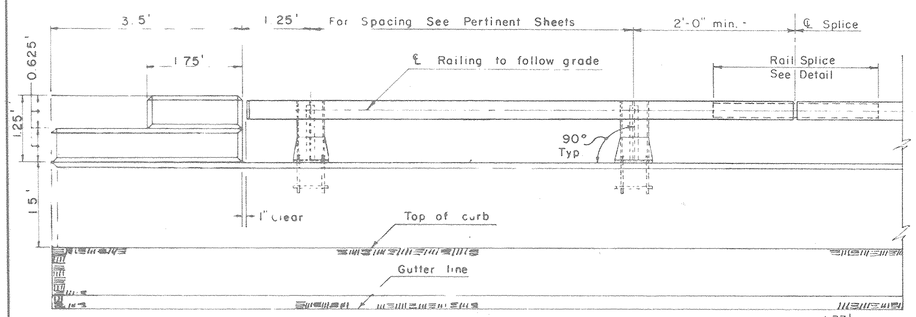

ELEVATION

SCALE 3/4" = 1'-0"

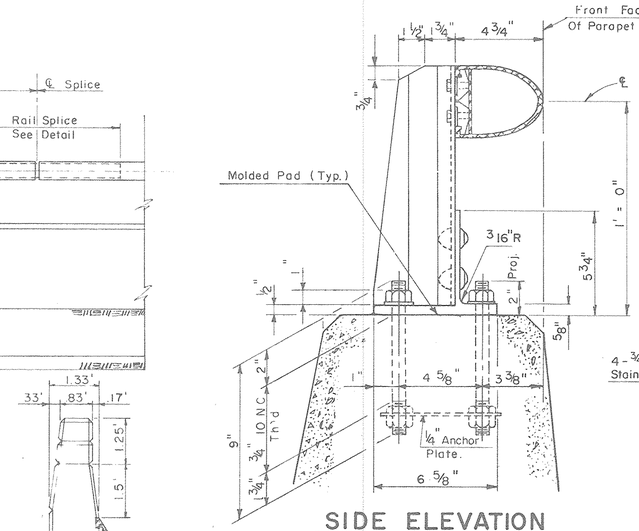

SIDE ELEVATION

SCALE 3" = 1'-0"

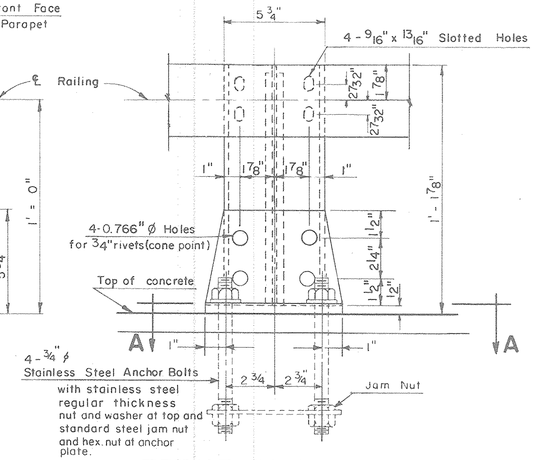

FRONT ELEVATION

SCALE 3" = 1'-0"

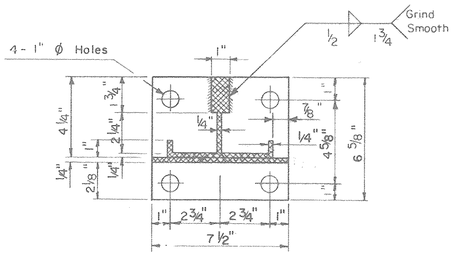

SECTION A-A

SCALE 3" = 1'-0"

Notes :

Rail elements shall be continuous over a minimum of four rail posts wherever possible and in no case less than two. Welding of two or more rails to form an element will not be allowed.

For structures having railings with a radius of 400 ft. or more the railing may be sprung into place.

For structures having railings with a radius of less than 400 ft. the railing must be curved.

All railing anchorage systems shall be fabricated and installed perpendicular to the grade of the railing.

Splice shall be a sliding fit in rail section.

All extruded rails and posts shall be free of burrs, irregularities and sharp edges.

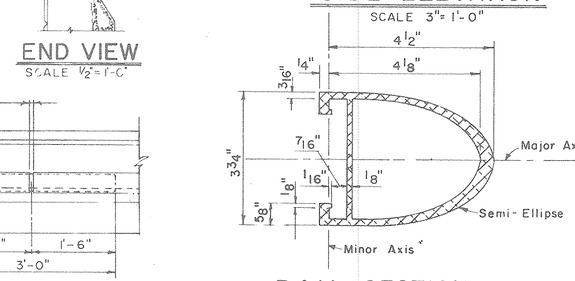

RAIL SECTION

SCALE 6" = 1'-0"

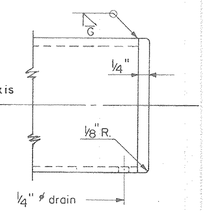

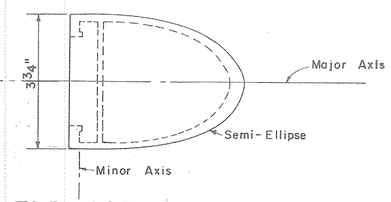

RAIL END CAP

SCALE 6" = 1'-0"

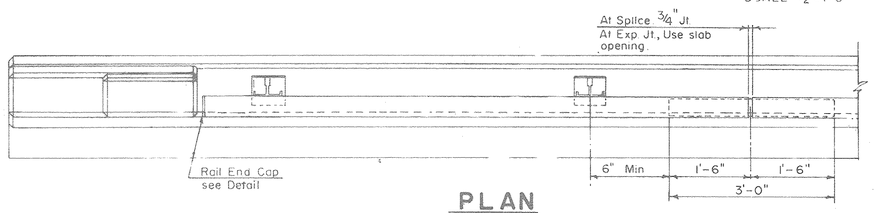

PLAN

SCALE 3/4" = 1'-0"

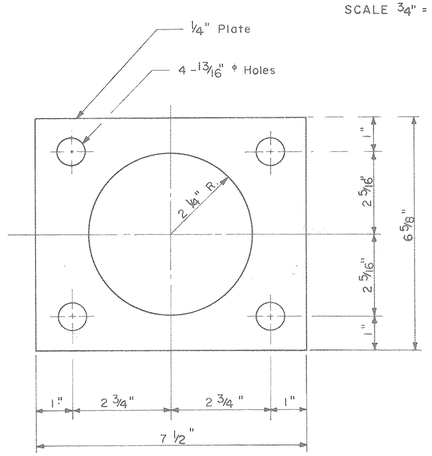

ANCHOR PLATE

Scale 6" = 1'-0"

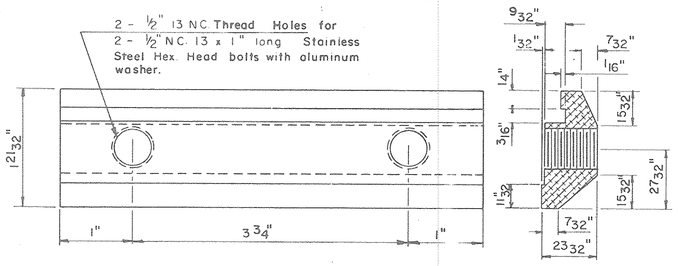

POST CONNECTION

Full Size

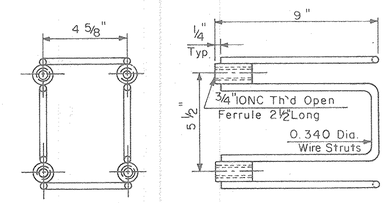

PRESET ANCHORAGE SYSTEM

Scale 3" = 1'

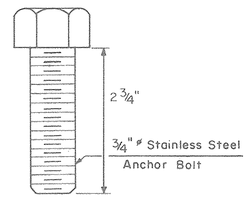

Anchor Bolt For Preset Anchorage System

NOT to SCALE

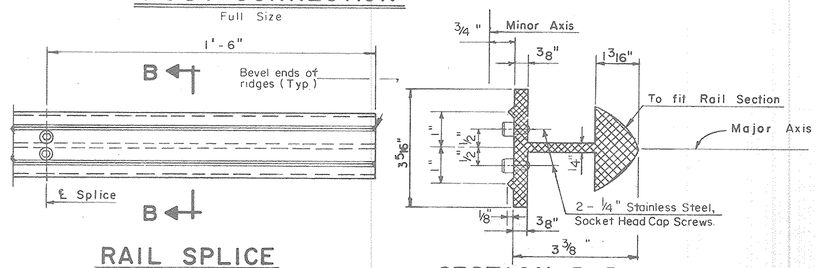

RAIL SPLICE

SCALE 3" = 1'-0"

SECTION B-B

SCALE 6" = 1'-0"

THIS SHEET NOT CONNECTED WITH OTHER SHEETS

FEDERAL AID PROJECT NO: FAP F-71(107)

CONNECTICUT
DEPARTMENT OF TRANSPORTATION

WETHERSFIELD

MODERNIZATION OF ROUTES I-91/3 INTERCHANGE
WIDENING OF I - 91 SOUTHBOUND OVER ELM STREET

METAL BRIDGE RAIL (TRAFFIC) (EXTRUDED POST ALUMINUM)

ENGINEER H. W. LOCHNER, INC., BY L-C ASSOCIATES, INC.

APPROVED [signature] DATE 10/27/89

NO.	DATE	DESCRIPTION	DRAFTER A. S. D.	CHECKER F. S. C.	DESIGNER A. S. D.
		REVISIONS	STRUCTURE NO. 159-164-5		STRUCTURE SHEET 20 OF 21

159-164

449.01

123

F.H.W.A. REGION NO.	STATE	TOWN	FED. AID PROJ. NO.	PROJ. NO.	YEAR	ROUTE NO.	SHEET NO.	TOTAL SHEETS
1	CONN.	WETHERSFIELD	FAP F-7(107)	159-164	1991	I-91/3	124	21

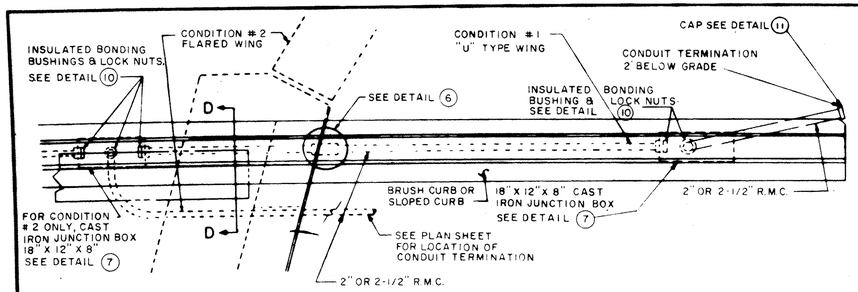

NOTE:
1. UTILIZE 30° BENDS TO FACILIATE CONDUIT LEAVING WINGWALL AT 2'-0" BELOW GRADE.
2. CONDUIT BENDS SHALL HAVE A RADIUS OF NOT LESS THAN 6 TIMES THE TRADE SIZE OF CONDUIT

1 CONDUIT PARAPET TO FILL
PLAN SCALE 1/2" = 1'

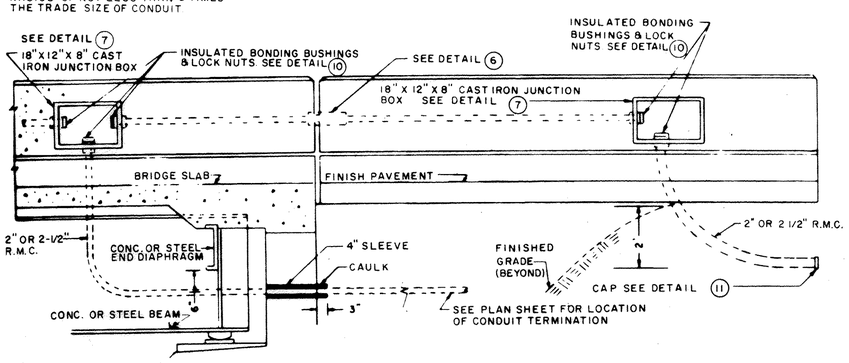

2 CONDUIT PARAPET TO FILL
ELEVATION SCALE 1/2" = 1'

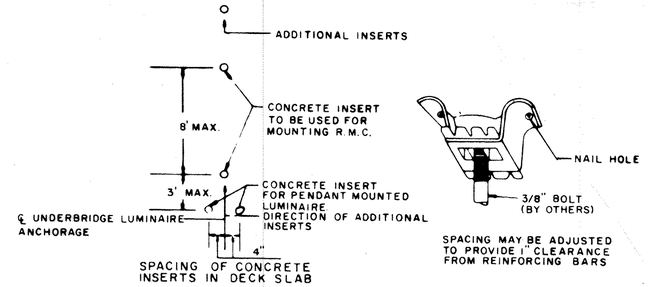

SPACING OF CONCRETE INSERTS IN DECK SLAB

4 CONCRETE INSERT DETAIL

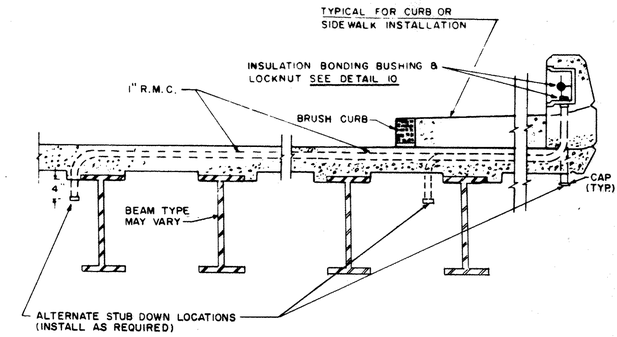

9 SERVICE TO LUMINAIRE UNDER STRUCTURE

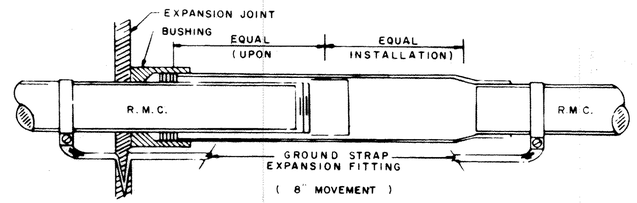

6 DETAIL OF EXPANSION FITTING
USE AT ALL EXPANSION JOINTS

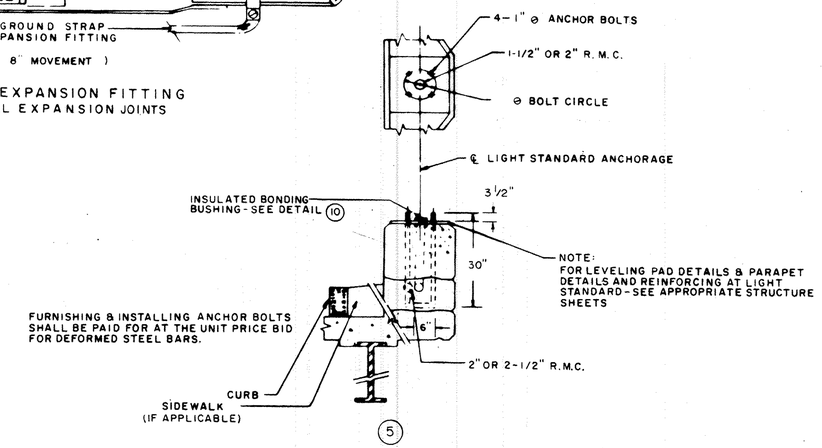

FURNISHING & INSTALLING ANCHOR BOLTS SHALL BE PAID FOR AT THE UNIT PRICE BID FOR DEFORMED STEEL BARS.

5

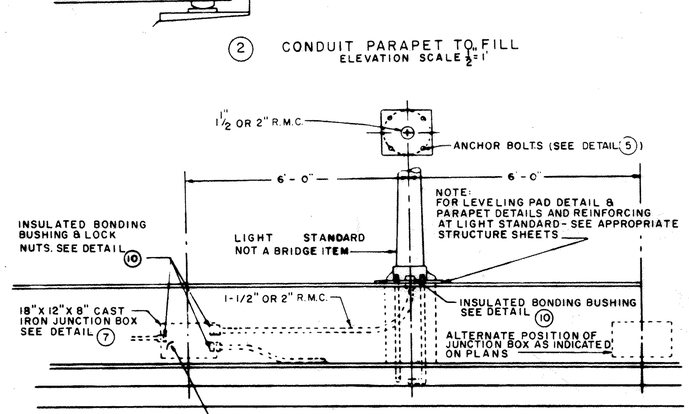

3 LIGHTING STANDARD ON PARAPET WALL

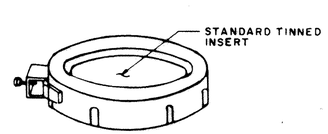

10 CAPPED INSULATED BONDING BUSHING WITH GROUND LUG

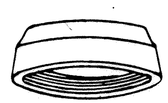

11 MALLEABLE IRON CAP

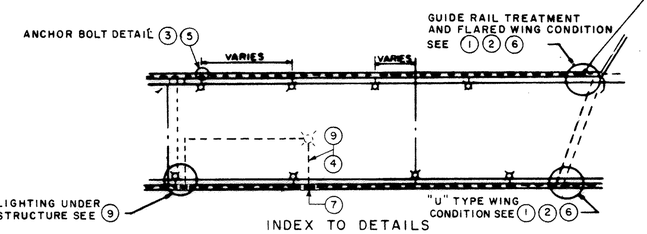

INDEX TO DETAILS

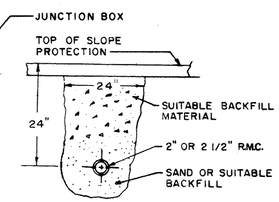

RIGID METAL CONDUIT UNDER SLOPE PROTECTION

12

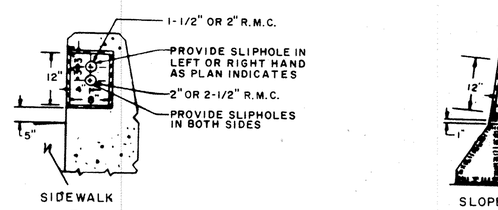

7 JUNCTION BOX INSTALLATION
(USE APPLICABLE DETAIL)

NOTE:
FOR PARAPET AND REINFORCING DETAILS AT JUNCTION BOX, SEE APPROPRIATE STRUCTURE SHEET.

ABBREVIATIONS & TERMS	
℄ L S A	- ℄ LIGHT STANDARD ANCHORAGE
R.M.C. (S.P.)	- RIGID METAL CONDUIT UNDER SLOPE PROTECTION
R.M.C. STR	- RIGID METAL CONDUIT IN STRUCTURE
C.I.J.B.	- CAST IRON JUNCTION BOX
℄ U.L.A.	- ℄ UNDERBRIDGE LUMINAIRE ANCHORAGE
R.M.C. (SD)	- RIGID METAL CONDUIT STUB DOWN

* NOTE: FOR DETAILS THAT APPLY ONLY

	DET. NO.	DESCRIPTION
*	1	CONDUIT PARAPET TO FILL
*	2	CONDUIT PARAPET TO FILL
	3	LIGHTING STANDARD ON PARAPET WALL
	4	CONCRETE INSERT
	5	PARAPET TREATMENT AT LIGHT STANDARD
*	6	DETAIL OF EXPANSION FITTING
*	7	JUNCTION BOX INSTALLATION
	8	
*	9	SERVICE TO LUMINAIRE UNDER STRUCTURE
*	10	CAPPED INSULATED BONDING BUSHING WITH GROUND LUG
*	11	MALLEABLE IRON CAP
	12	RIGID METAL CONDUIT UNDER SLOPE PROTECTION

THIS SHEET NOT CORRECTED

CONNECTICUT
DEPARTMENT OF TRANSPORTATION
BUREAU OF HIGHWAYS

WETHERSFIELD

MODERNIZATION OF ROUTES I-91/3 INTERCHANGE
WIDENING OF I-91 SOUTHBOUND OVER ELM STREET

ELECTRICAL DETAILS

SUBMITTED BY [signature] ENG. OF TRAFFIC - ELECTRICAL DATE [illegible]
APPROVED [signature] CHIEF OF TRAFFIC ENGINEERING DATE 3/21/94

SCALE: NONE

STRUCTURE NO. 159-164-5

STRUCTURE SHEET 21 OF 21

159-164

409-01