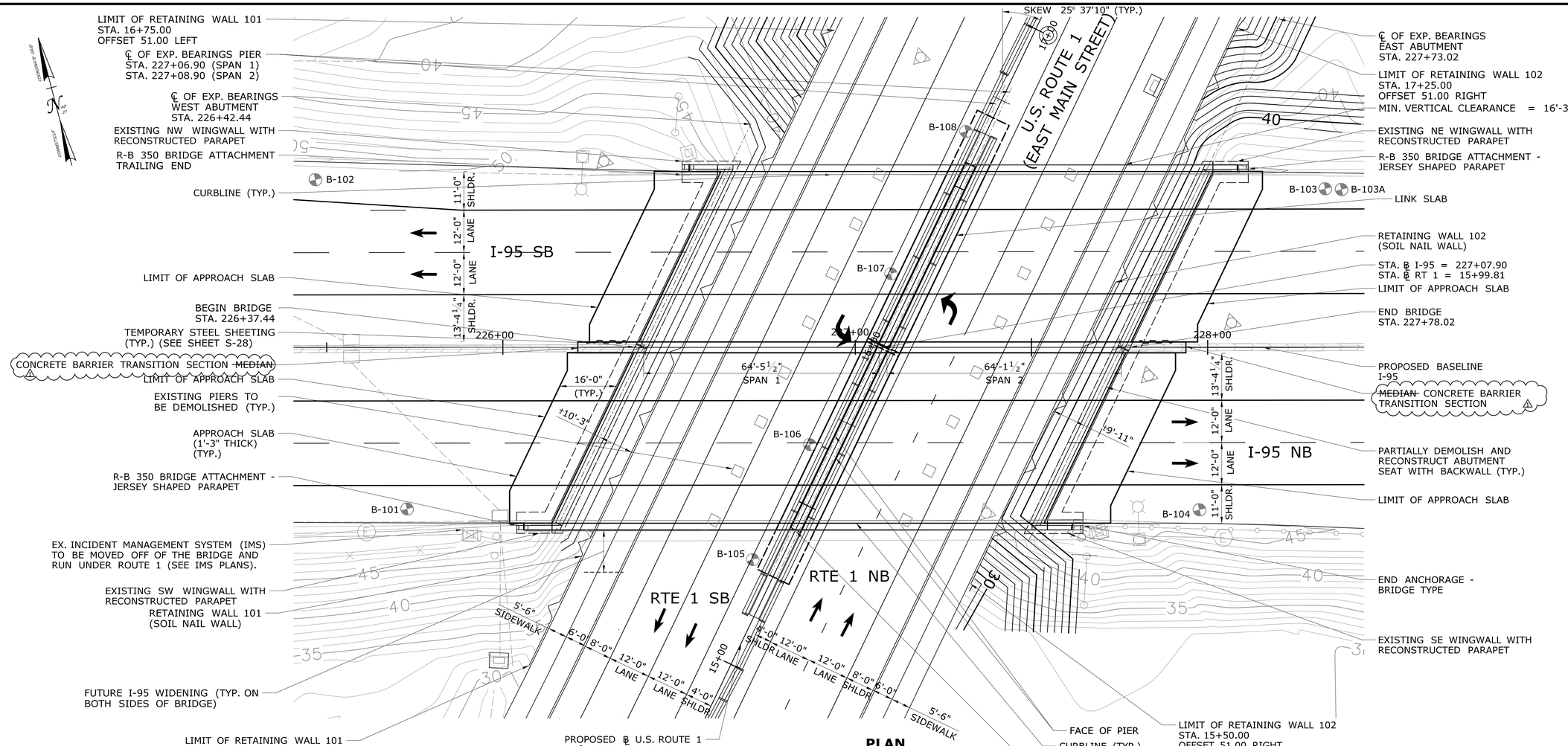

PLAN

SCALE: 1/16"=1'-0"

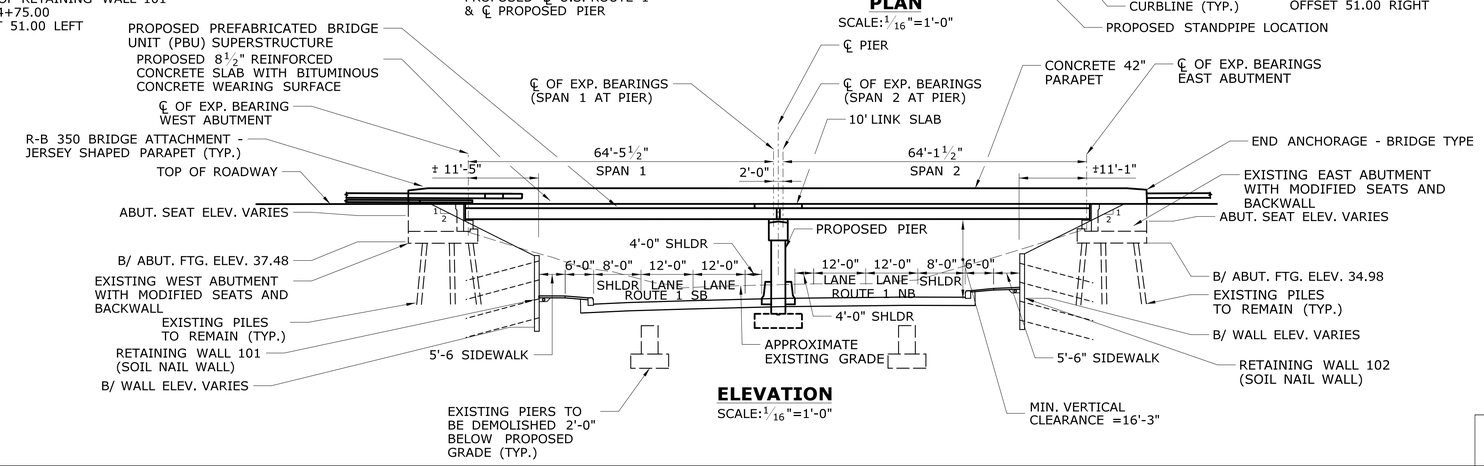

ELEVATION

SCALE: 1/16"=1'-0"

LEGEND:

BORING LOCATION

Shaun Suehr
2018.09.26
11:36:46-04'00'

ADDENDUM NO. 1

REV.	DATE	REVISION DESCRIPTION	SHEET NO.
1	09/10/2018	ADDED CONCRETE BARRIER TRANSITION SECTION CALLOUT	

THE INFORMATION, INCLUDING ESTIMATED QUANTITIES OF WORK, SHOWN ON THESE SHEETS IS BASED ON LIMITED INVESTIGATIONS BY THE STATE AND IS IN NO WAY WARRANTED TO INDICATE THE CONDITIONS OF ACTUAL QUANTITIES OF WORK WHICH WILL BE REQUIRED.

Plotted Date: 9/24/2018

DESIGNER/DRAFTER: A. LOUIS
CHECKED BY: H. MORERA
SCALE AS NOTED

STATE OF CONNECTICUT
DEPARTMENT OF TRANSPORTATION

Filename: ...\SB MSTL..0196..PLAN & ELEV

SIGNATURE BLOCK: STATE OF CONNECTICUT SHAUN SUEHR No. 32482 LICENSED PROFESSIONAL ENGINEER

AMMANN & WHITNEY
2500 WESTCHESTER AVENUE
SUITE 305
PURCHASE, NEW YORK

PROJECT TITLE:
REHABILITATION OF BRIDGE NO. 00196 - INTERSTATE 95 OVER U.S. ROUTE 1

TOWN: **BRANFORD**

DRAWING TITLE: **GENERAL PLAN & ELEVATION**

PROJECT NO. **14-185**
DRAWING NO. **S-02**
SHEET NO. **04.02.A1**

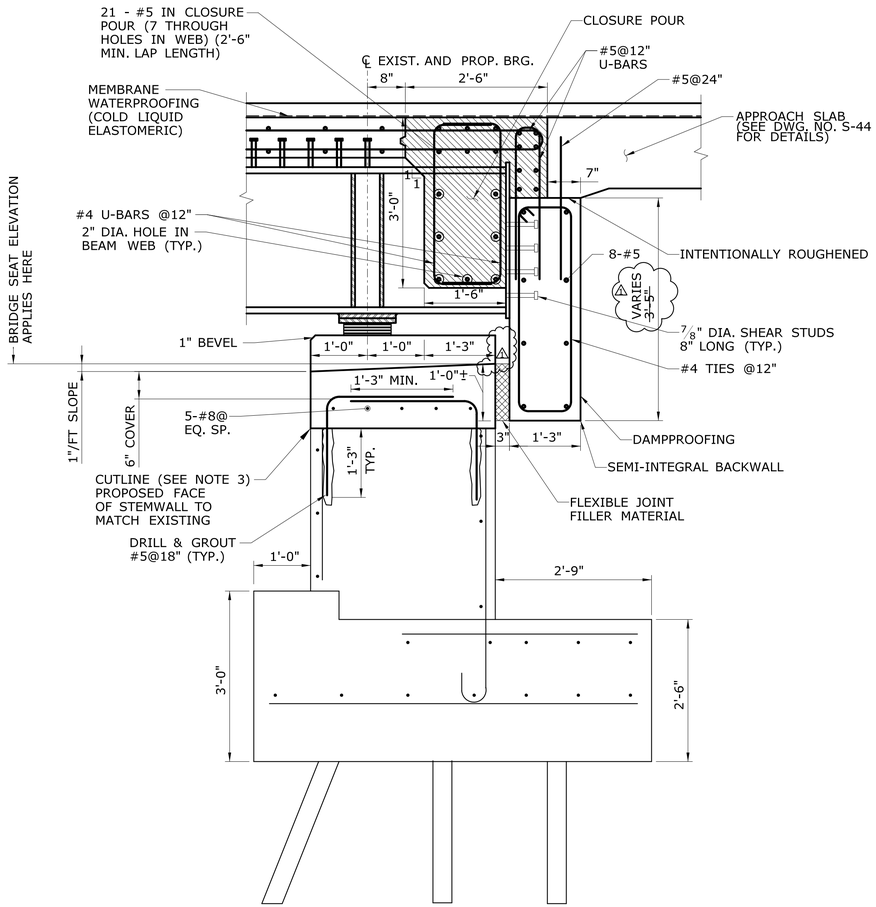

TYPICAL PROPOSED ABUTMENT SECTION

SCALE: 3/4" = 1'-0"

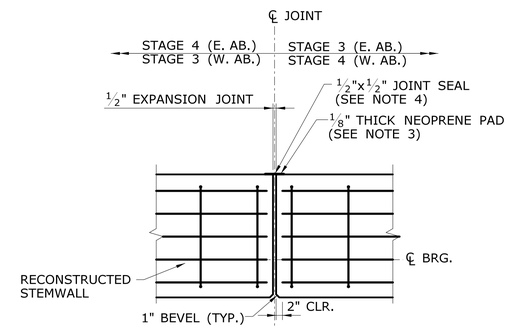

JOINT DETAIL AT STAGE LINE

SCALE: 3/4" = 1'-0"

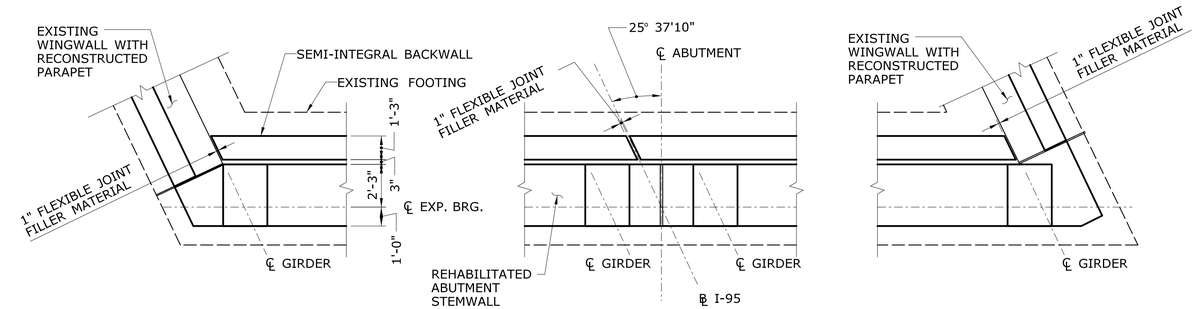

SEMI-INTEGRAL BACKWALL CORNER DETAILS

SCALE: 3/4" = 1'-0"

NOTES:

1. ALL DIMENSIONS ARE MEASURED PERPENDICULAR TO PROPOSED BEARING ℄
2. SEE ABUTMENT DEMO PLANS FOR CUTLINE ELEVATIONS.
3. NEOPRENE PAD TO EXTEND FROM TOP OF EXISTING BACKWALL TO TOP OF RECONSTRUCTED BACKWALL.
4. JOINT SEAL TO EXTEND FROM TOP OF FOOTING TO THE TOP OF BACKWALL AND HORZIONTALLY ALONG TOP OF BACKWALL.

ADDENDUM NO. 1

REV.	DATE	REVISION DESCRIPTION	SHEET NO.
1	09/21/2018	REVISED BACKWALL DIMENSIONING	

THE INFORMATION, INCLUDING ESTIMATED QUANTITIES OF WORK, SHOWN ON THESE SHEETS IS BASED ON LIMITED INVESTIGATIONS BY THE STATE AND IS IN NO WAY WARRANTED TO INDICATE THE CONDITIONS OF ACTUAL QUANTITIES OF WORK WHICH WILL BE REQUIRED.

Plotted Date: 9/26/2018

DESIGNER/DRAFTER: A. LOUIS
CHECKED BY: A. UPADHYAY
SCALE AS NOTED

STATE OF CONNECTICUT
DEPARTMENT OF TRANSPORTATION

Filename: ...\SB MSTL_0196_PROP. ABUT DETAILS.dgn

SIGNATURE/BLOCK: STATE OF CONNECTICUT SIMON SUEDER No. 32484 LICENSED PROFESSIONAL ENGINEER

AMMANN & WHITNEY
2500 WESTCHESTER AVENUE
SUITE 305
PURCHASE, NEW YORK

PROJECT TITLE:
REHABILITATION OF BRIDGE NO. 00196 - INTERSTATE 95 OVER U.S. ROUTE 1

TOWN: **BRANFORD**

DRAWING TITLE: **ABUTMENT SECTION AND DETAILS**

PROJECT NO. **14-185**
DRAWING NO. **S-26**
SHEET NO. **04.26.A1**

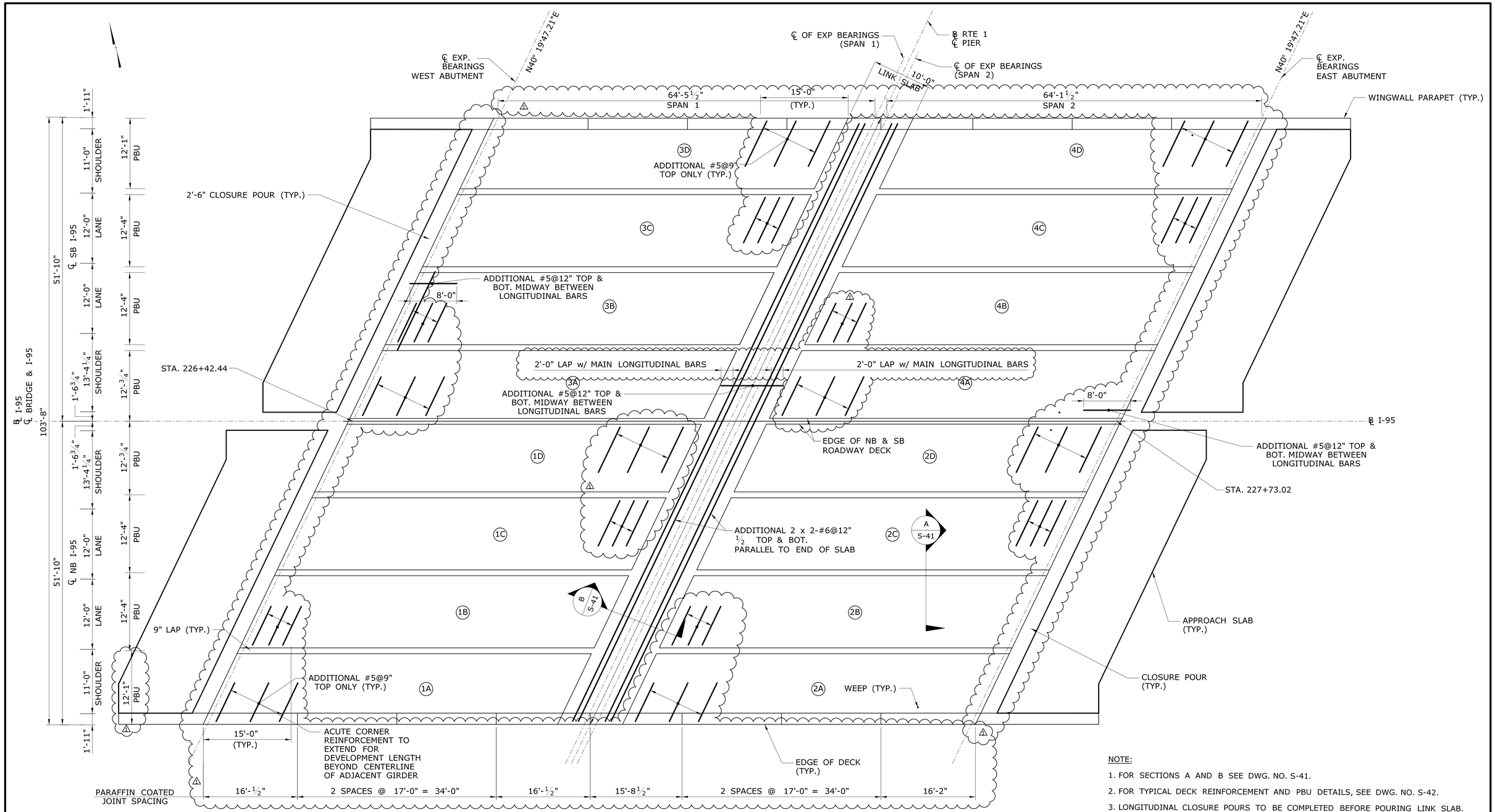

PLAN

SCALE: ⅛" = 1'-0"

NOTE:

1. FOR SECTIONS A AND B SEE DWG. NO. S-41.
2. FOR TYPICAL DECK REINFORCEMENT AND PBU DETAILS, SEE DWG. NO. S-42.
3. LONGITUDINAL CLOSURE POURS TO BE COMPLETED BEFORE POURING LINK SLAB.

LEGEND

XX = PBU NUMBER

ADDENDUM NO. 1

REV.	DATE	REVISION DESCRIPTION	SHEET NO.
1	09/10/2018	VARIOUS DIMENSION AND REINFORCEMENT REVISIONS	

THE INFORMATION, INCLUDING ESTIMATED QUANTITIES OF WORK, SHOWN ON THESE SHEETS IS BASED ON LIMITED INVESTIGATIONS BY THE STATE AND IS IN NO WAY WARRANTED TO INDICATE THE CONDITIONS OF ACTUAL QUANTITIES OF WORK WHICH WILL BE REQUIRED.

Plotted Date: 9/21/2018

DESIGNER/DRAFTER: A. LOUIS

CHECKED BY: H. MORERA

SCALE AS NOTED

STATE OF CONNECTICUT
DEPARTMENT OF TRANSPORTATION

Filename: ...\SB MSTL_0196_DECK REINFORCE.dgn

SIGNATURE/BLOCK: STATE OF CONNECTICUT, BRIAN SUMPTER, No. 32484, LICENSED PROFESSIONAL ENGINEER

AMMANN & WHITNEY
2500 WESTCHESTER AVENUE
SUITE 305
PURCHASE, NEW YORK

PROJECT TITLE:
REHABILITATION OF BRIDGE NO. 00196 - INTERSTATE 95 OVER U.S. ROUTE 1

TOWN: **BRANFORD**

DRAWING TITLE: **DECK LAYOUT PLAN**

PROJECT NO. **14-185**

DRAWING NO. **S-39**

SHEET NO. **04.39.A1**

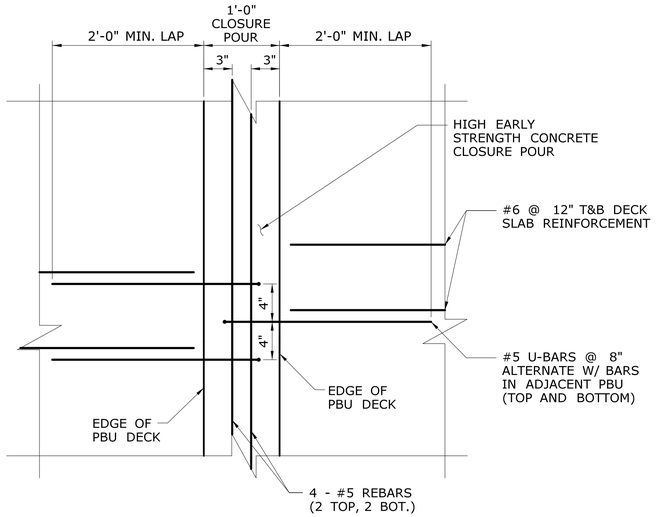

PLAN

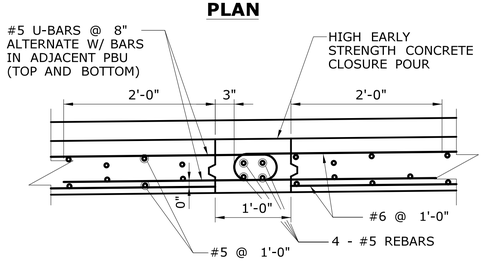

SECTION

A / S-39 **SECTION A CLOSURE POUR**

SCALE: 1" = 1'-0"

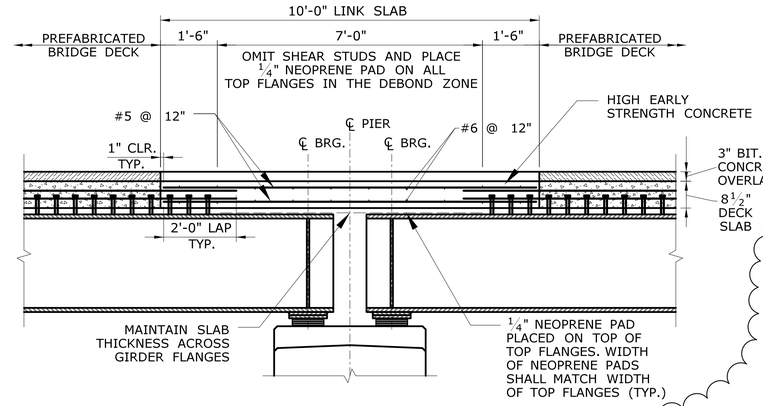

B / S-39 **SECTION B TYPICAL SECTION THROUGH LINK SLAB**

SCALE: 1/2" = 1'-0"

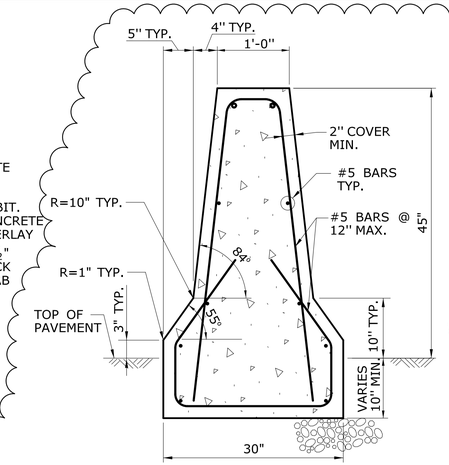

SECTION A

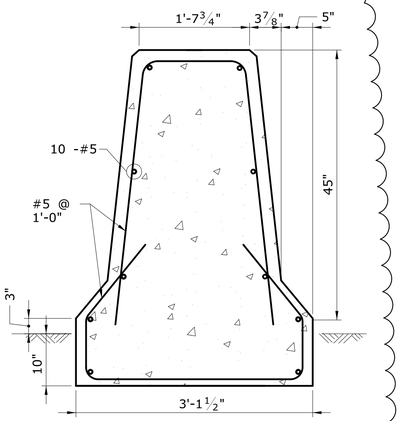

SECTION B

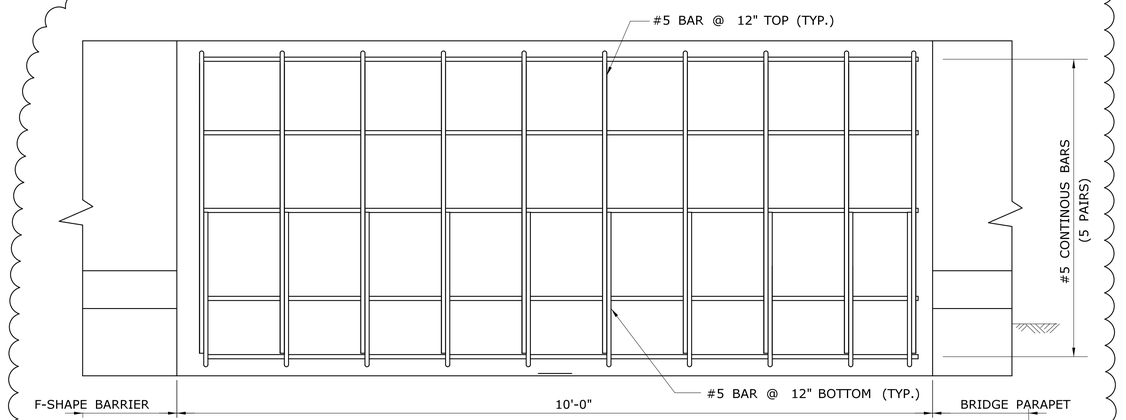

ELEVATION

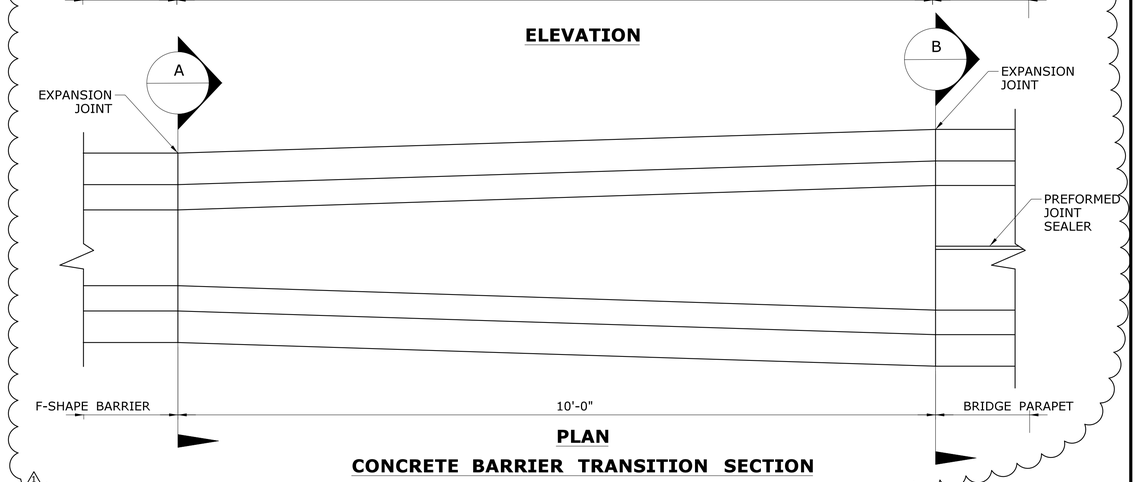

PLAN

CONCRETE BARRIER TRANSITION SECTION

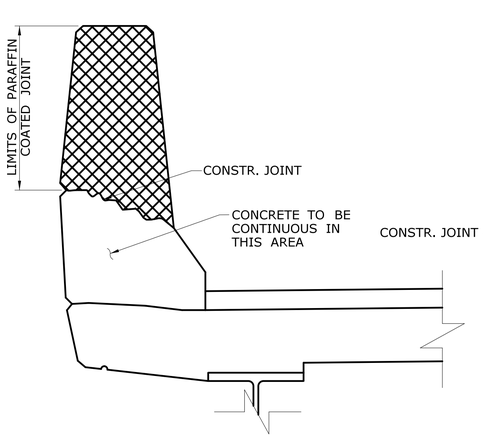

TYPICAL

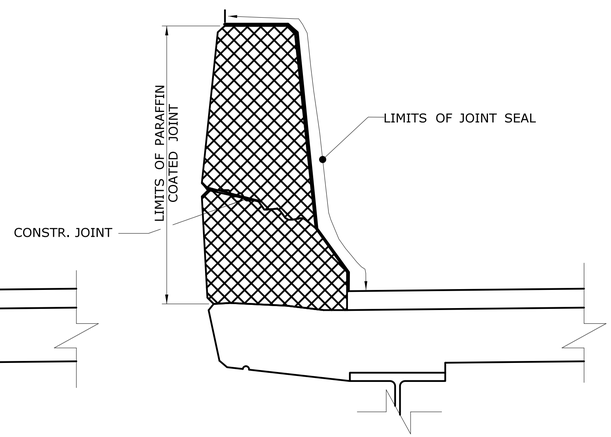

OVER PIER

PARAFFIN COATED JOINT DETAILS

ADDENDUM NO. 1

REV.	DATE	REVISION DESCRIPTION	SHEET NO.
1	09/10/2018	ADDED DETAIL FOR CONC. BARRIER TRANS. SECTION	

THE INFORMATION, INCLUDING ESTIMATED QUANTITIES OF WORK, SHOWN ON THESE SHEETS IS BASED ON LIMITED INVESTIGATIONS BY THE STATE AND IS IN NO WAY WARRANTED TO INDICATE THE CONDITIONS OF ACTUAL QUANTITIES OF WORK WHICH WILL BE REQUIRED.

Plotted Date: 9/26/2018

DESIGNER/DRAFTER: A. LOUIS

CHECKED BY: H. MORERA

SCALE AS NOTED

STATE OF CONNECTICUT
DEPARTMENT OF TRANSPORTATION

Filename: ...\SB_MSTL_0196_DECK_DETAILS.dgn

SIGNATURE/BLOCK: STATE OF CONNECTICUT SERGUN STEFFEN No. 20484 LICENSED PROFESSIONAL ENGINEER

AMMANN & WHITNEY
2500 WESTCHESTER AVENUE
SUITE 305
PURCHASE, NEW YORK

PROJECT TITLE:
REHABILITATION OF BRIDGE NO. 00196 - INTERSTATE 95 OVER U.S. ROUTE 1

TOWN: **BRANFORD**

DRAWING TITLE: **DECK REINFORCEMENT DETAILS - 2**

PROJECT NO. **14-185**

DRAWING NO. **S-41**

SHEET NO. **04.41.A1**

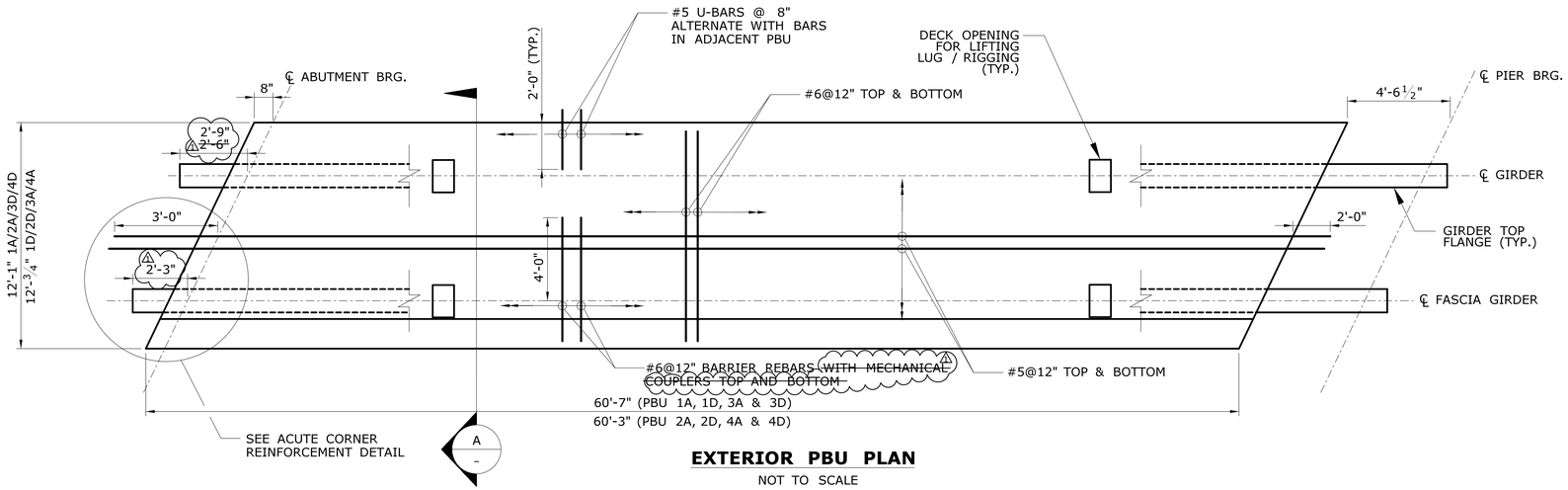

EXTERIOR PBU PLAN

NOT TO SCALE

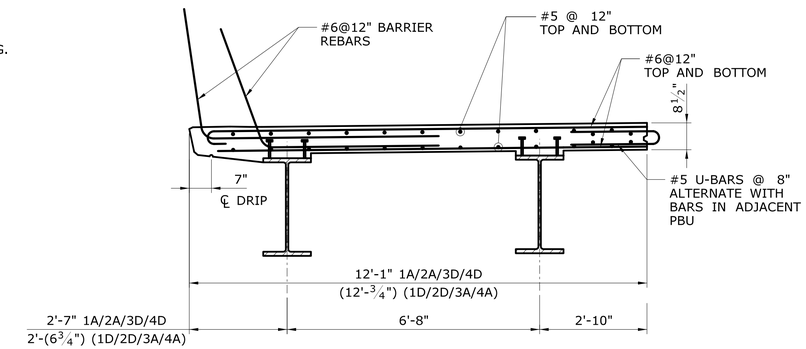

SECTION A

EXTERIOR PBU SECTION

SCALE: ½" = 1'-0"

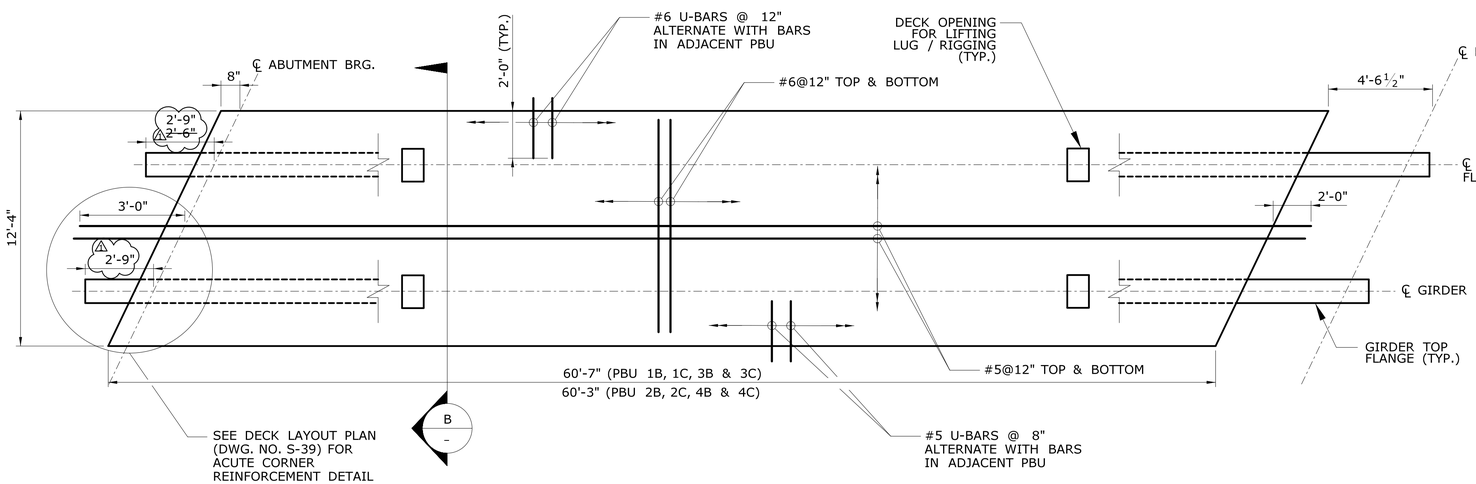

INTERIOR PBU PLAN

NOT TO SCALE

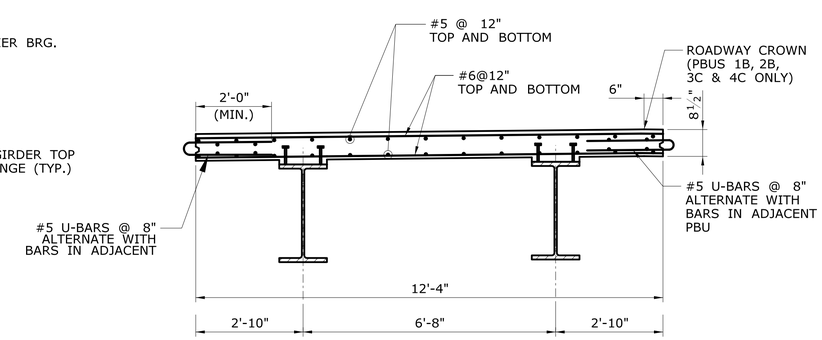

SECTION B

INTERIOR PBU SECTION

SCALE: ½" = 1'-0"

PBU TOLERANCES

VARIATION FROM SPECIFIED HEIGHT	±¼"
WIDTH MEASURED FROM A COMMON REFERENCE POINT	±¼"
VARIATION FROM SPECIFIED REINFORCING PROJECTION MEASURED FROM A COMMON REFERENCE POINT	±¼"
HORIZONTAL SETTING TOLERANCE MEASURED FROM A COMMON REFERENCE POINT	±¼"
ERECTION ELEVATION TOLERANCE	±¼"

NOTES:

FOR ACUTE CORNER AND OTHER ADDITIONAL DECK REINFORCEMENT, SEE DECK LAYOUT PLAN (DWG. NO. S-39).

ADDENDUM NO. 1

REV.	DATE	REVISION DESCRIPTION	SHEET NO.
1	09/10/2018	DIMENSION REVISIONS	

THE INFORMATION, INCLUDING ESTIMATED QUANTITIES OF WORK, SHOWN ON THESE SHEETS IS BASED ON LIMITED INVESTIGATIONS BY THE STATE AND IS IN NO WAY WARRANTED TO INDICATE THE CONDITIONS OF ACTUAL QUANTITIES OF WORK WHICH WILL BE REQUIRED.

Plotted Date: 9/24/2018

DESIGNER/DRAFTER: A. LOUIS
CHECKED BY: A. UPADHYAY
SCALE AS NOTED

STATE OF CONNECTICUT
DEPARTMENT OF TRANSPORTATION

Filename: ...\SB_MSTL_0196_PBU_Details.dgn

SIGNATURE/BLOCK: STATE OF CONNECTICUT SHAUN SUBER No. 32432 LICENSED PROFESSIONAL ENGINEER

AMMANN & WHITNEY
2500 WESTCHESTER AVENUE
SUITE 305
PURCHASE, NEW YORK

PROJECT TITLE: REHABILITATION OF BRIDGE NO. 00196 - INTERSTATE 95 OVER U.S. ROUTE 1

TOWN: BRANFORD

DRAWING TITLE: PBU DETAILS

PROJECT NO. 14-185
DRAWING NO. S-42
SHEET NO. 04.42.A1