01 - 04 - HIGHWAYS

INDEX OF DRAWINGS

DRAWING NUMBER	DRAWING TITLE	DRAWING NUMBER	DRAWING TITLE
HWY-01	HIGHWAY COVER SHEET		
HWY-02	MISCELLANEOUS DETAILS		
HWY-03	SITE 1: GREENWICH HIGHWAY PLAN		
HWY-04	SITE 2: WESTPORT HIGHWAY PLAN		
HWY-05	SITE 3: BRIDGEPORT HIGHWAY PLAN		
HWY-06	SITE 5: MERIDEN HIGHWAY PLAN		
HWY-07	SITE 7: ROCKY HILL HIGHWAY PLAN		
HWY-08	SITE 8: FARMINGTON HIGHWAY PLAN		
HWY-09	SITE 9: EAST HARTFORD HIGHWAY PLAN		
HWY-10	SITE 9: EAST HARTFORD CONSTRUCTION PLAN		

THE DESIGN APPEARS TO CONFORM TO APPLICABLE CRITERIA. APPROVAL IS NOT TO BE CONSTRUED TO MEAN THAT ALL ASPECTS OF THE DESIGN HAVE BEEN PERSONALLY CHECKED BY THE UNDERSIGNED.

Michael S. Cherpak, P.E.
FOR
2018.07.18 09:38:47-04'00'

TRANSPORTATION PRINCIPAL ENGINEER

REV.	DATE	REVISION DESCRIPTION	SHEET NO.

THE INFORMATION, INCLUDING ESTIMATED QUANTITIES OF WORK, SHOWN ON THESE SHEETS IS BASED ON LIMITED INVESTIGATIONS BY THE STATE AND IS IN NO WAY WARRANTED TO INDICATE THE CONDITIONS OF ACTUAL QUANTITIES OF WORK WHICH WILL BE REQUIRED.

Plotted Date: 6/20/2018

DESIGNER/DRAFTER: WJPG

CHECKED BY: NAI

STATE OF CONNECTICUT
DEPARTMENT OF TRANSPORTATION

Filename: ...\HW_MSH_170_3447_TSH-01.dgn

SIGNATURE/ BLOCK:

OFFICE OF ENGINEERING

APPROVED BY:

Matthew Pond

PROJECT TITLE:

STATEWIDE REPLACEMENT OF OVERHEAD SIGN SUPPORTS ON VARIOUS ROUTES

TOWN: VARIOUS

DRAWING TITLE: HIGHWAYS COVER SHEET

PROJECT NO. 170-3447

DRAWING NO. HWY-01

SHEET NO. 01.04.01

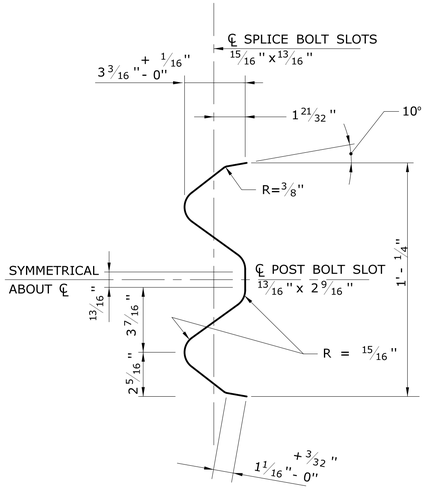

NOTE: ALL DIMENSIONS SUBJECT TO MANUFACTURING TOLERANCES

SECTION THRU RAIL ELEMENT END VIEW

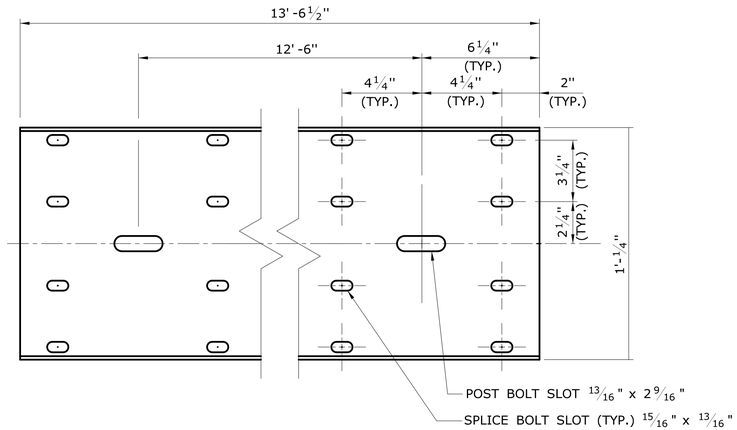

DETAIL A
W-BEAM RAIL ELEMENT (10 GAUGE) CLASS B, TYPE II

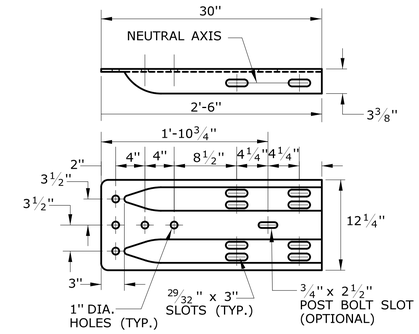

DETAIL B
W-BEAM TERMINAL CONNECTOR CLASS B TYPE II

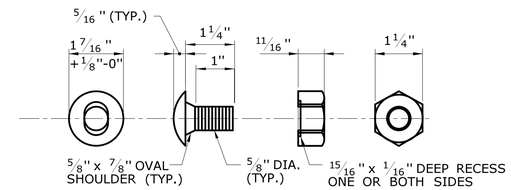

BUTTONHEAD BOLT **HEX NUT**

NOTE: AFTER GALVANIZING, THE NUT SHALL BE FREE RUNNING ON THE BOLT.

W-BEAM SPLICE BOLT DETAIL

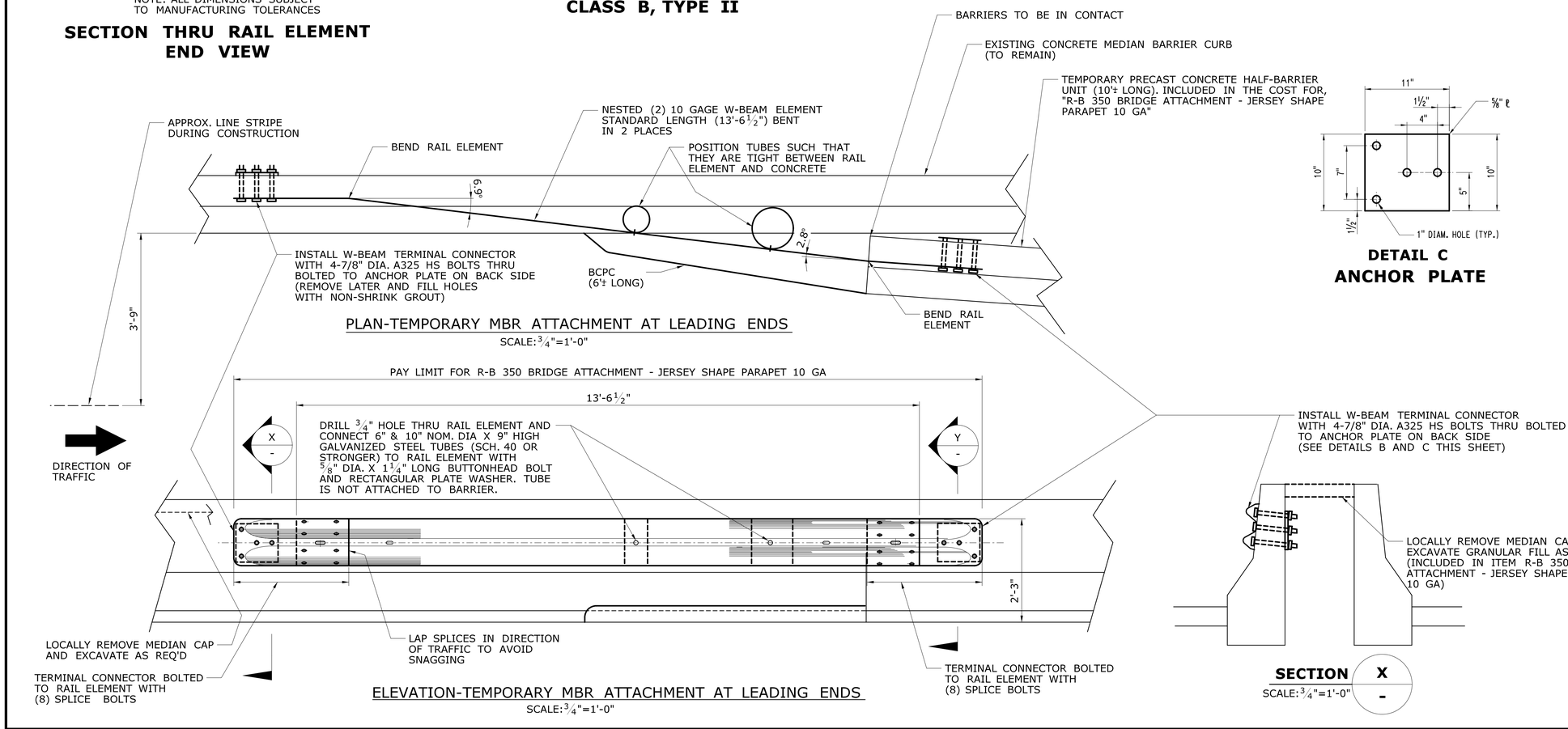

PLAN-TEMPORARY MBR ATTACHMENT AT LEADING ENDS
SCALE: 3/4"=1'-0"

ELEVATION-TEMPORARY MBR ATTACHMENT AT LEADING ENDS
SCALE: 3/4"=1'-0"

DETAIL C
ANCHOR PLATE

DETAIL D
STEEL SPACER TUBE

SECTION X
SCALE: 3/4"=1'-0"

SECTION Y
SCALE: 3/4"=1'-0"

REV.	DATE	REVISION DESCRIPTION	SHEET NO.
-	-	-	-
-	-	-	-
-	-	-	-
-	-	-	-
-	-	-	-
-	-	-	-

THE INFORMATION, INCLUDING ESTIMATED QUANTITIES OF WORK, SHOWN ON THESE SHEETS IS BASED ON LIMITED INVESTIGATIONS BY THE STATE AND IS IN NO WAY WARRANTED TO INDICATE THE CONDITIONS OF ACTUAL QUANTITIES OF WORK WHICH WILL BE REQUIRED.

Plotted Date: 7/17/2018

DESIGNER/DRAFTER: WJPG
CHECKED BY: NAI
SCALE AS NOTED

STATE OF CONNECTICUT
DEPARTMENT OF TRANSPORTATION

Filename: ...\HW_MSH_170_3447_HWY-02_MISC_DETAIL.dgn

SIGNATURE/BLOCK:
OFFICE OF ENGINEERING
APPROVED BY: DATE:
Matthew Paul

PROJECT TITLE:
STATEWIDE REPLACEMENT OF OVERHEAD SIGN SUPPORTS ON VARIOUS ROUTES

TOWN: VARIOUS

DRAWING TITLE: MISCELLANEOUS DETAILS

PROJECT NO. 170-3447
DRAWING NO. HWY-02
SHEET NO. 01.04.02

GENERAL NOTES

1. TERMINATE GUIDERAIL AT A MINIMUM OF 26' FROM EDGE OF TRAVELWAY.

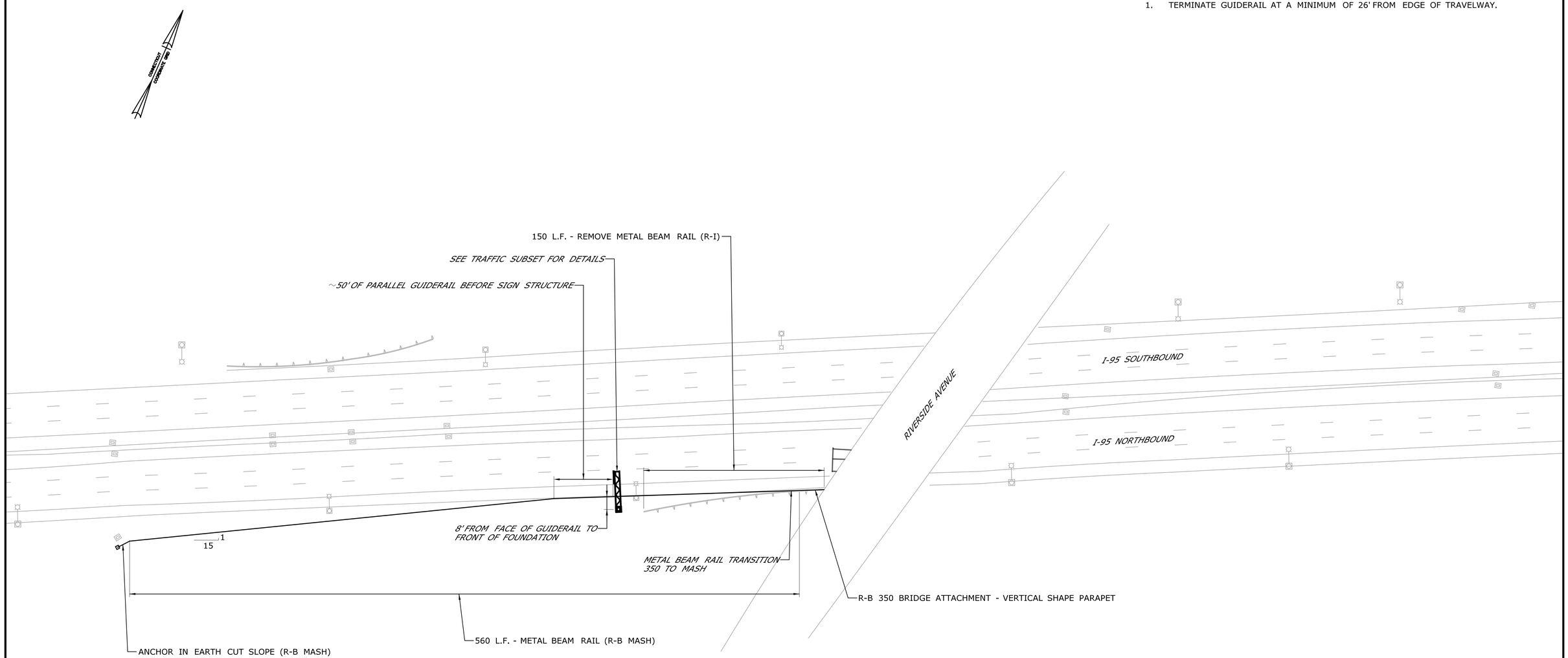

REV.	DATE	REVISION DESCRIPTION	SHEET NO.

THE INFORMATION, INCLUDING ESTIMATED QUANTITIES OF WORK, SHOWN ON THESE SHEETS IS BASED ON LIMITED INVESTIGATIONS BY THE STATE AND IS IN NO WAY WARRANTED TO INDICATE THE CONDITIONS OF ACTUAL QUANTITIES OF WORK WHICH WILL BE REQUIRED.

Plotted Date: 6/20/2018

DESIGNER/DRAFTER: WJPG

CHECKED BY: NAI

SCALE IN FEET 0 40 80

SCALE 1"=40'

STATE OF CONNECTICUT
DEPARTMENT OF TRANSPORTATION

Filename: ...\HW_MSH_170_3447_HWY-03_THRU_HWY-11.dgn

SIGNATURE/ BLOCK:

OFFICE OF ENGINEERING

APPROVED BY:

Matthew Paul

PROJECT TITLE:

STATEWIDE REPLACEMENT OF OVERHEAD SIGN SUPPORTS ON VARIOUS ROUTES

TOWN: VARIOUS

DRAWING TITLE: SITE 1: GREENWICH HIGHWAY PLAN

PROJECT NO. 170-3447

DRAWING NO. HWY-03

SHEET NO. 01.04.03

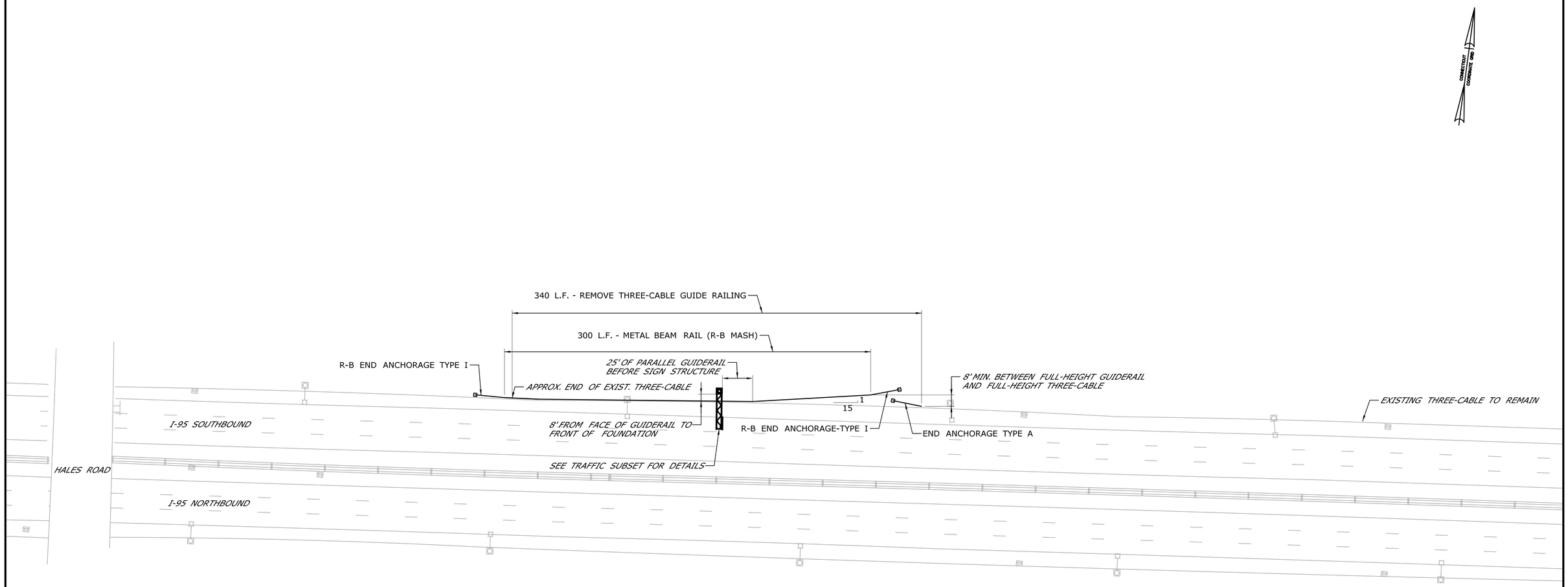

REV.	DATE	REVISION DESCRIPTION	SHEET NO.

THE INFORMATION, INCLUDING ESTIMATED QUANTITIES OF WORK, SHOWN ON THESE SHEETS IS BASED ON LIMITED INVESTIGATIONS BY THE STATE AND IS IN NO WAY WARRANTED TO INDICATE THE CONDITIONS OF ACTUAL QUANTITIES OF WORK WHICH WILL BE REQUIRED.

Plotted Date: 7/12/2018

DESIGNER/DRAFTER: WJPG

CHECKED BY: NAI

SCALE IN FEET 0 40 80

SCALE 1"=40'

STATE OF CONNECTICUT
DEPARTMENT OF TRANSPORTATION

Filename: ...\HW_MSH_170_3447_HWY-03_THRU_HWY-11.dgn

SIGNATURE/ BLOCK:

OFFICE OF ENGINEERING

APPROVED BY:

Matthew Vail

PROJECT TITLE:

STATEWIDE REPLACEMENT OF OVERHEAD SIGN SUPPORTS ON VARIOUS ROUTES

TOWN: **VARIOUS**

DRAWING TITLE: **SITE 2: WESTPORT HIGHWAY PLAN**

PROJECT NO. **170-3447**

DRAWING NO. **HWY-04**

SHEET NO. **01.04.04**

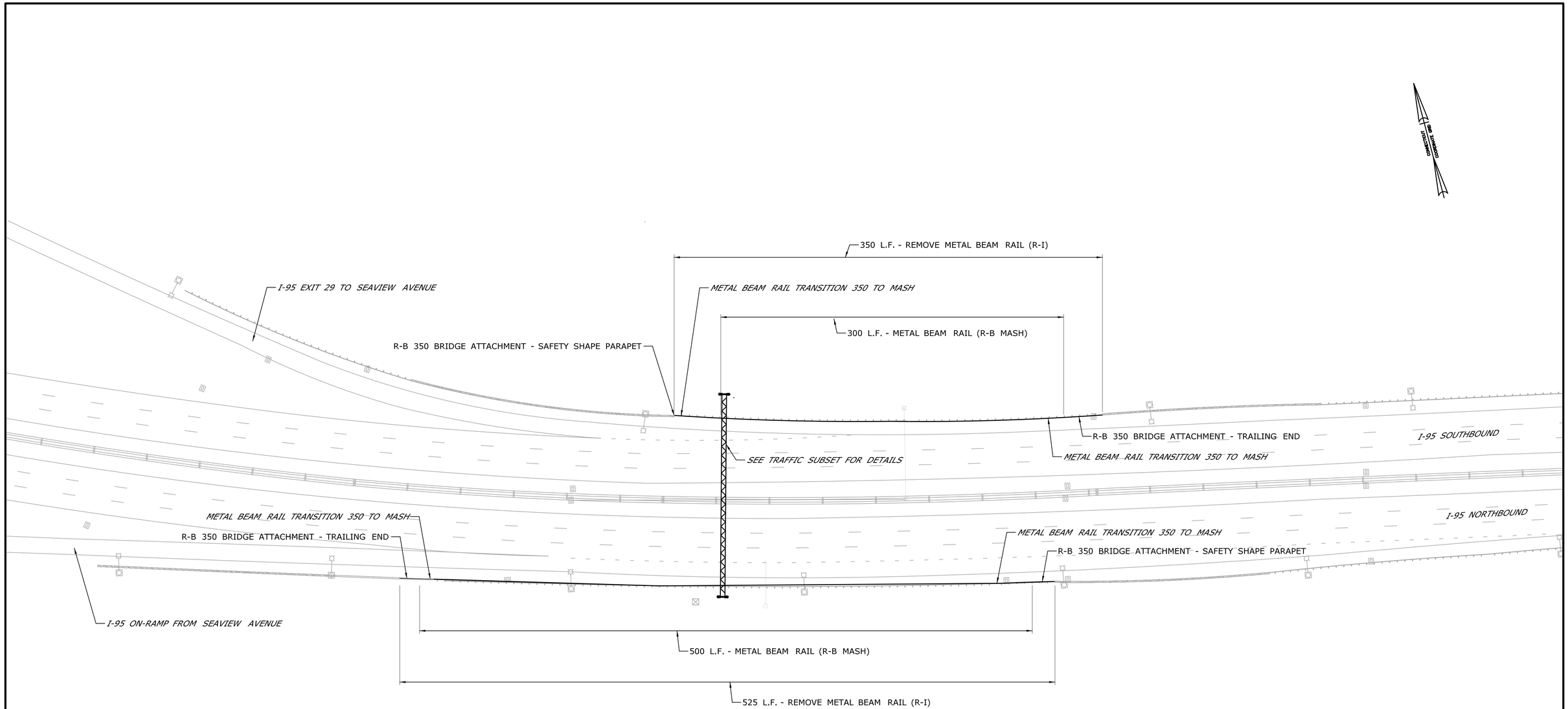

REV.	DATE	REVISION DESCRIPTION	SHEET NO.

THE INFORMATION, INCLUDING ESTIMATED QUANTITIES OF WORK, SHOWN ON THESE SHEETS IS BASED ON LIMITED INVESTIGATIONS BY THE STATE AND IS IN NO WAY WARRANTED TO INDICATE THE CONDITIONS OF ACTUAL QUANTITIES OF WORK WHICH WILL BE REQUIRED.

Plotted Date: 6/20/2018

DESIGNER/DRAFTER: WJPG

CHECKED BY: NAI

SCALE IN FEET 0 40 80

SCALE 1"=40'

STATE OF CONNECTICUT
DEPARTMENT OF TRANSPORTATION

Filename: ...\HW_MSH_170_3447_HWY-03_THRU_HWY-11.dgn

SIGNATURE/ BLOCK:

OFFICE OF ENGINEERING

APPROVED BY:

Matthew Pond

PROJECT TITLE:

STATEWIDE REPLACEMENT OF OVERHEAD SIGN SUPPORTS ON VARIOUS ROUTES

TOWN:

VARIOUS

DRAWING TITLE:

SITE 3: BRIDGEPORT HIGHWAY PLAN

PROJECT NO. **170-3447**

DRAWING NO. **HWY-05**

SHEET NO. **01.04.05**

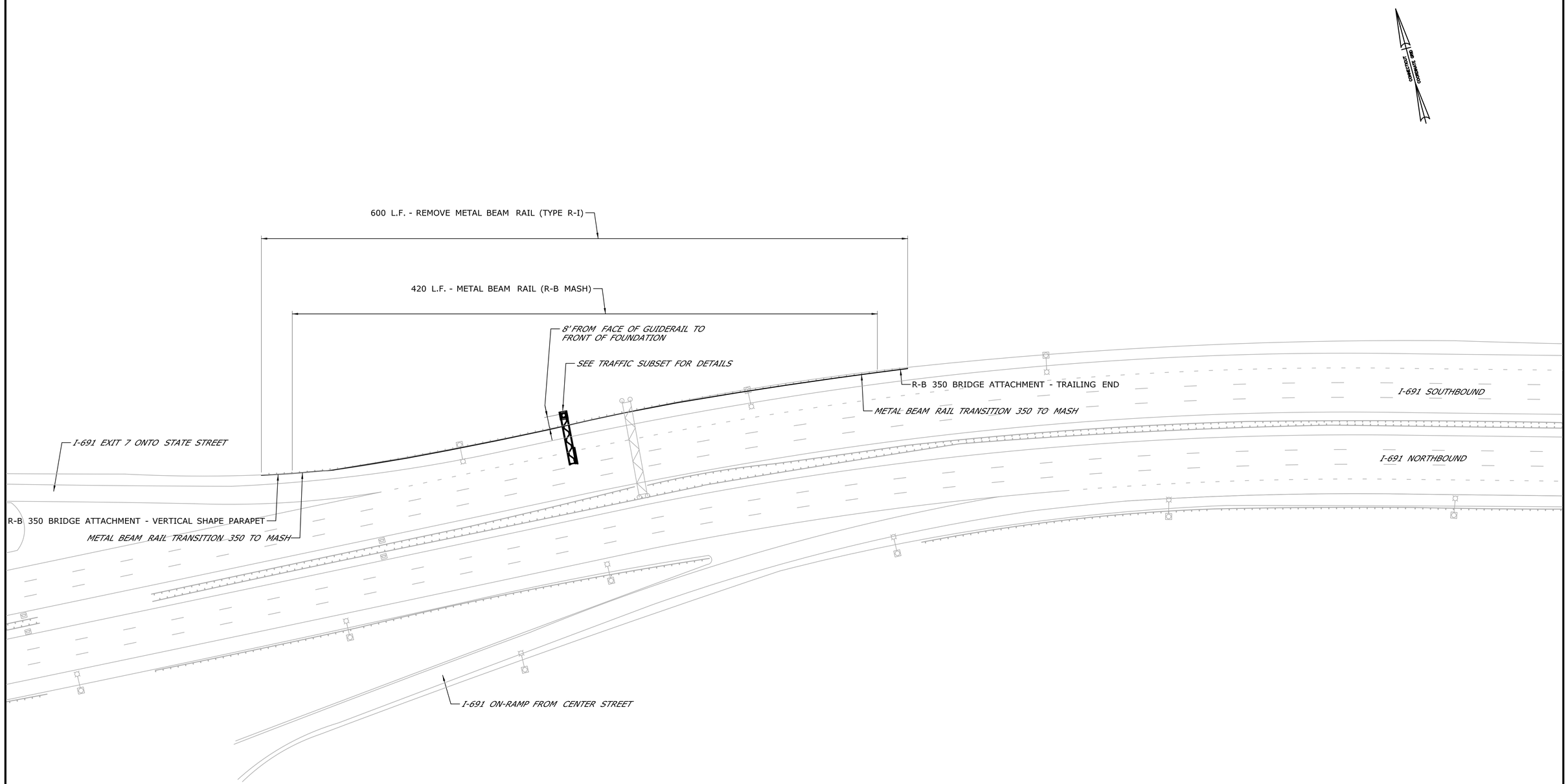

REV.	DATE	REVISION DESCRIPTION	SHEET NO.

THE INFORMATION, INCLUDING ESTIMATED QUANTITIES OF WORK, SHOWN ON THESE SHEETS IS BASED ON LIMITED INVESTIGATIONS BY THE STATE AND IS IN NO WAY WARRANTED TO INDICATE THE CONDITIONS OF ACTUAL QUANTITIES OF WORK WHICH WILL BE REQUIRED.

Plotted Date: 6/20/2018

DESIGNER/DRAFTER: WJPG

CHECKED BY: NAI

SCALE IN FEET 0 40 80

SCALE 1"=40'

STATE OF CONNECTICUT
DEPARTMENT OF TRANSPORTATION

Filename: ...\HW_MSH_170_3447_HWY-03_THRU_HWY-11.dgn

SIGNATURE/ BLOCK:

OFFICE OF ENGINEERING

APPROVED BY:

Matthew Paul

PROJECT TITLE:

STATEWIDE REPLACEMENT OF OVERHEAD SIGN SUPPORTS ON VARIOUS ROUTES

TOWN:

VARIOUS

DRAWING TITLE:

SITE 5: MERIDEN HIGHWAY PLAN

PROJECT NO. **170-3447**

DRAWING NO. **HWY-06**

SHEET NO. **01.04.06**

GENERAL NOTES

1. MINIMUM 50' OF TANGENT GUIDERAIL BETWEEN SIGN STRUCTURE AND IMPACT ATTENUATION SYSTEM (TANGENTIAL).

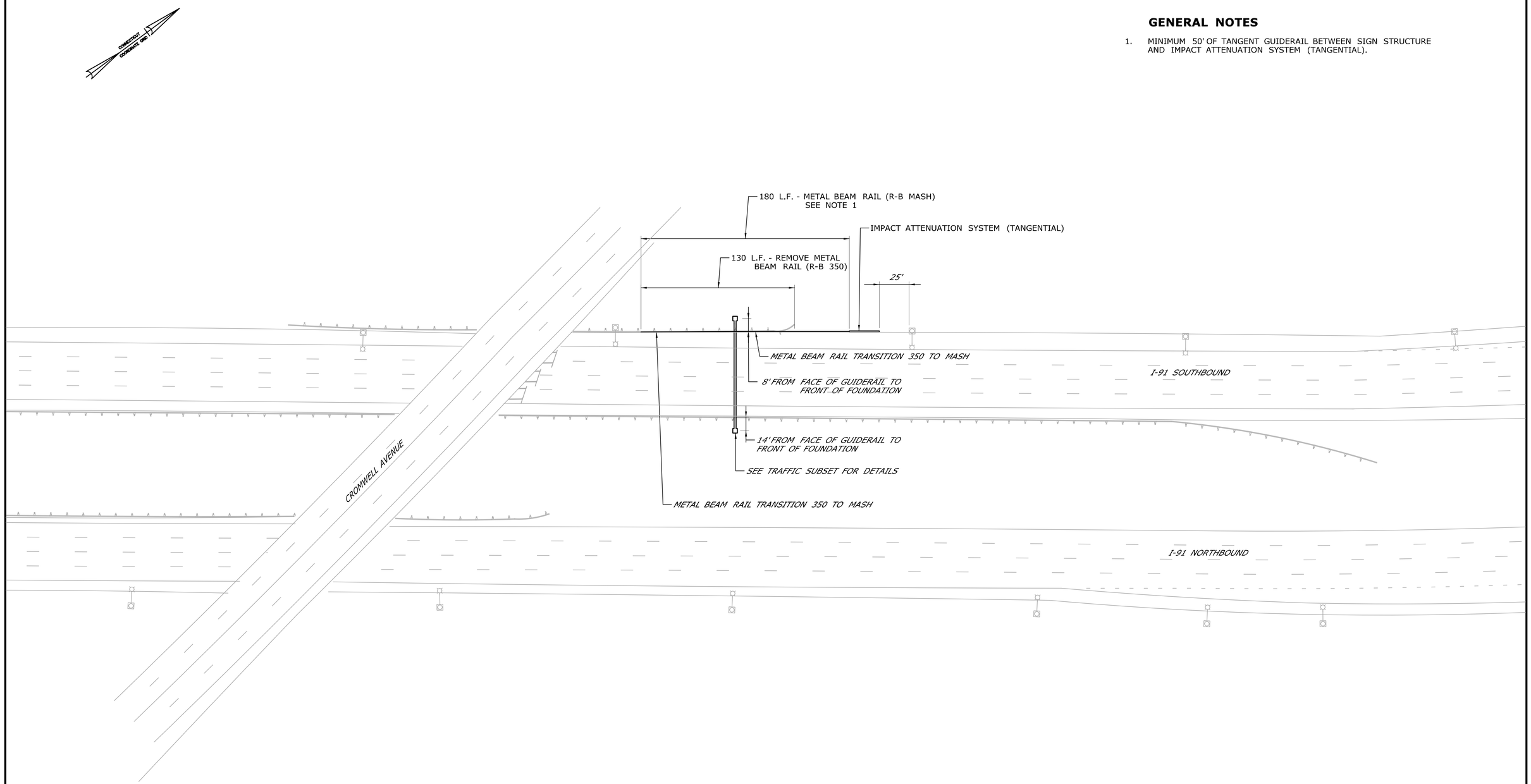

REV.	DATE	REVISION DESCRIPTION	SHEET NO.

THE INFORMATION, INCLUDING ESTIMATED QUANTITIES OF WORK, SHOWN ON THESE SHEETS IS BASED ON LIMITED INVESTIGATIONS BY THE STATE AND IS IN NO WAY WARRANTED TO INDICATE THE CONDITIONS OF ACTUAL QUANTITIES OF WORK WHICH WILL BE REQUIRED.

Plotted Date: 7/12/2018

DESIGNER/DRAFTER: WJPG

CHECKED BY: NAI

SCALE IN FEET 0 40 80

SCALE 1"=40'

STATE OF CONNECTICUT
DEPARTMENT OF TRANSPORTATION

Filename: ...\HW_MSH_170_3447_HWY-03_THRU_HWY-11.dgn

SIGNATURE/ BLOCK:

OFFICE OF ENGINEERING

APPROVED BY:

Matthew Vaf

PROJECT TITLE:

STATEWIDE REPLACEMENT OF OVERHEAD SIGN SUPPORTS ON VARIOUS ROUTES

TOWN: **VARIOUS**

DRAWING TITLE: **SITE 7: ROCKY HILL HIGHWAY PLAN**

PROJECT NO. 170-3447

DRAWING NO. HWY-07

SHEET NO. 01.04.07

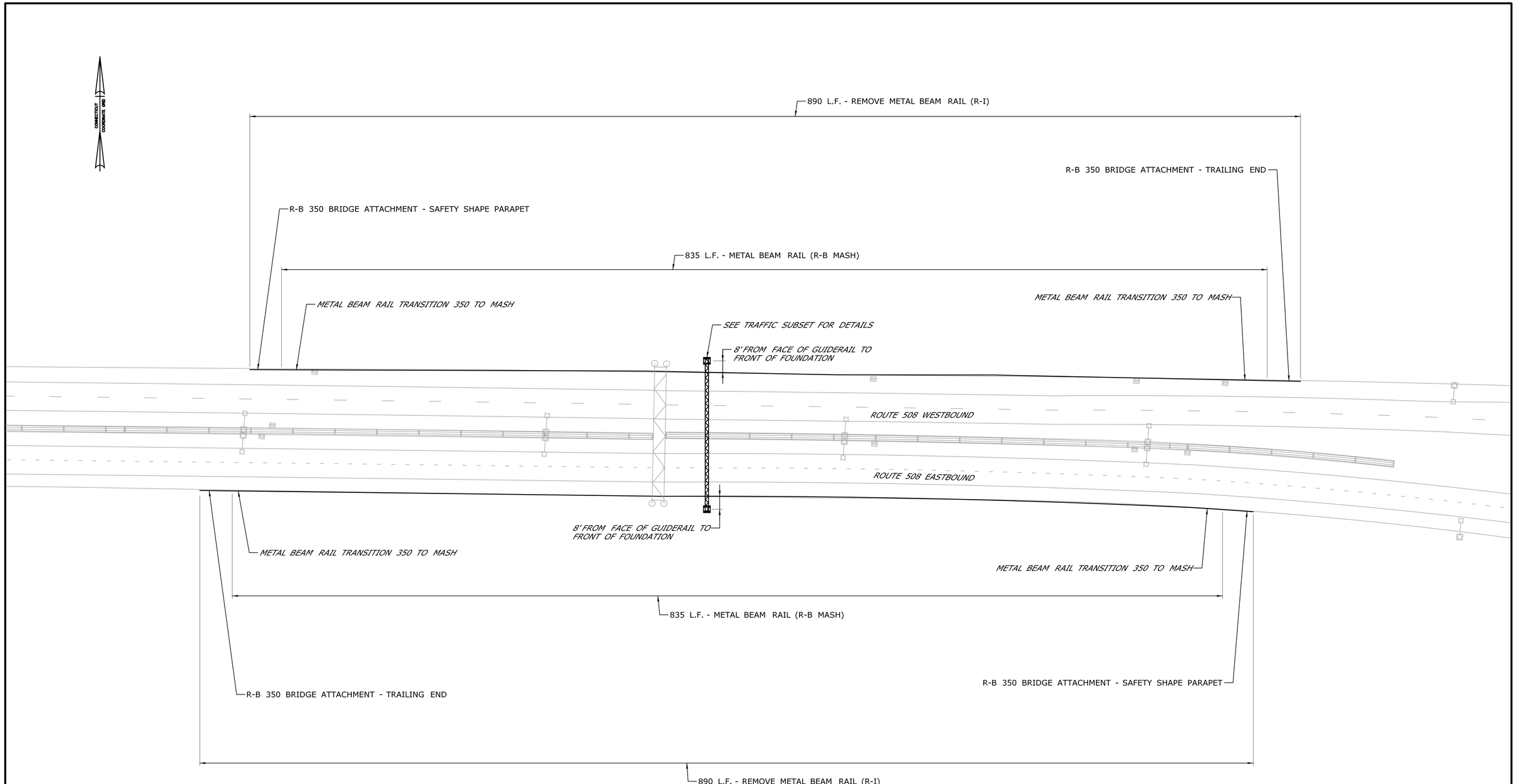

REV.	DATE	REVISION DESCRIPTION	SHEET NO.

THE INFORMATION, INCLUDING ESTIMATED QUANTITIES OF WORK, SHOWN ON THESE SHEETS IS BASED ON LIMITED INVESTIGATIONS BY THE STATE AND IS IN NO WAY WARRANTED TO INDICATE THE CONDITIONS OF ACTUAL QUANTITIES OF WORK WHICH WILL BE REQUIRED.

Plotted Date: 6/20/2018

DESIGNER/DRAFTER: WJPG

CHECKED BY: NAI

SCALE IN FEET 0 40 80

SCALE 1"=40'

STATE OF CONNECTICUT
DEPARTMENT OF TRANSPORTATION

Filename: ...\HW_MSH_170_3447_HWY-03_THRU_HWY-11.dgn

SIGNATURE/ BLOCK:

OFFICE OF ENGINEERING

APPROVED BY:

Matthew Vail

PROJECT TITLE:

STATEWIDE REPLACEMENT OF OVERHEAD SIGN SUPPORTS ON VARIOUS ROUTES

TOWN: **VARIOUS**

DRAWING TITLE: **SITE 8: FARMINGTON HIGHWAY PLAN**

PROJECT NO. **170-3447**

DRAWING NO. **HWY-08**

SHEET NO. **01.04.08**

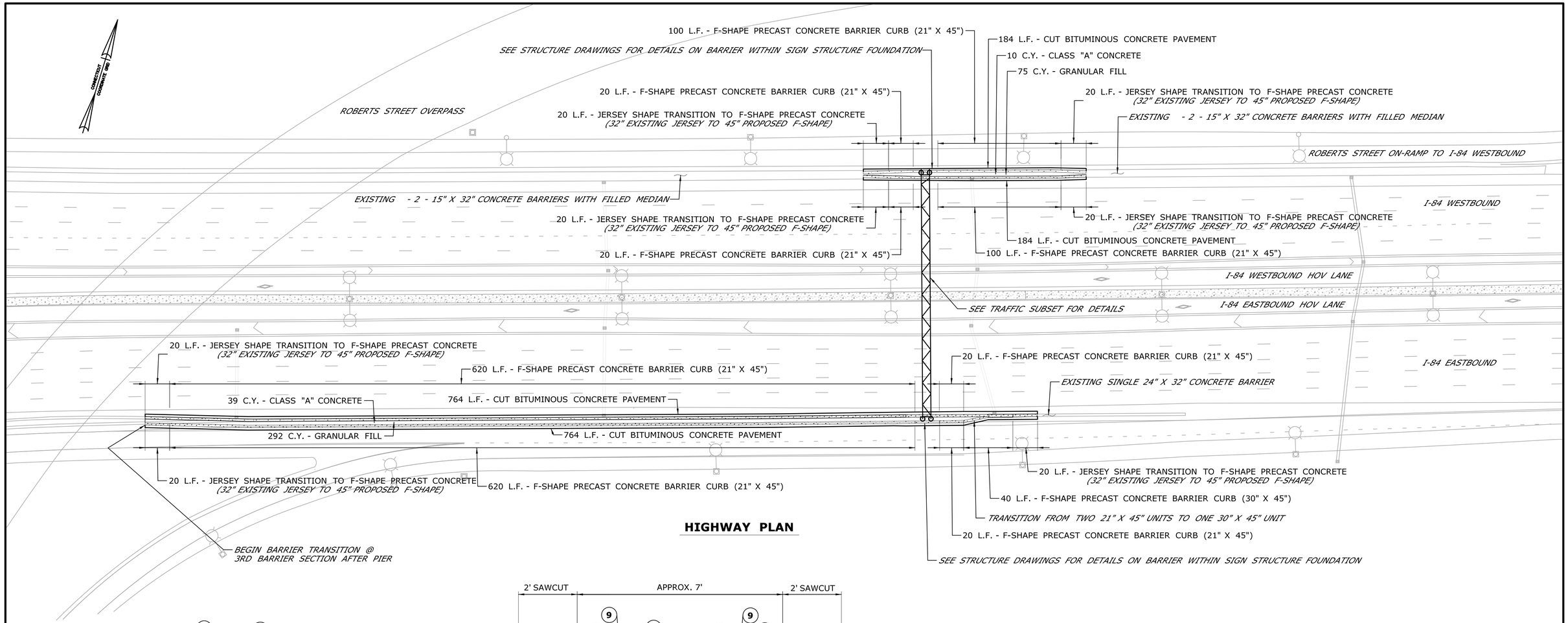

HIGHWAY PLAN

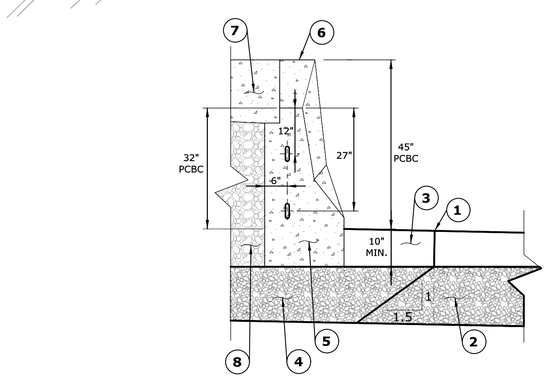

PARTIAL SECTION: JERSEY SHAPE (32") TRANSITION TO F-SHAPE (45") PRECAST CONCRETE BARRIER CURB

N.T.S.

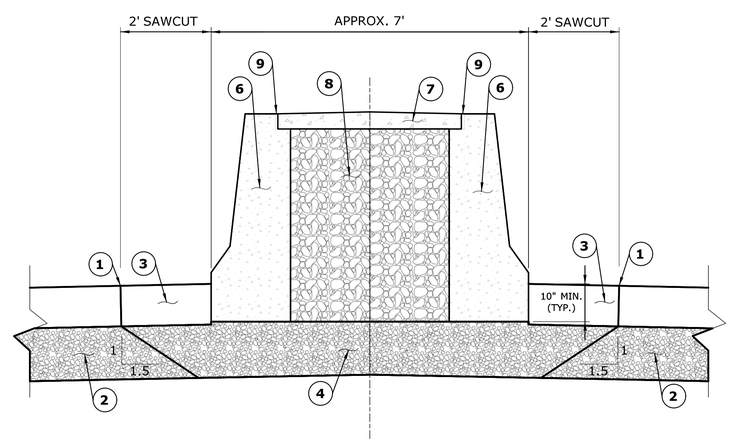

CROSS-SECTION: PROPOSED 45" F-SHAPE CONCRETE MEDIAN

N.T.S.

1. CUT BITUMINOUS CONCRETE PAVEMENT
2. EXISTING SUBBASE TO REMAIN
3. 4" HMA S0.5 TRAFFIC LEVEL 3 (PLACED IN TWO EQUAL LIFTS) ON, 10" HMA S1 TRAFFIC LEVEL 3 (PLACED IN TWO EQUAL LIFTS) NOTE: INDIVIDUAL LIFTS NOT SHOWN ON CROSS-SECTIONS FOR CLARITY
4. 14" PROCESSED AGGREGATE BASE
5. 21" X 32" JERSEY SHAPE PRECAST CONCRETE BARRIER CURB
6. 21" X 45" F-SHAPE PRECAST CONCRETE BARRIER CURB
7. CLASS "A" CAST-IN-PLACE CONCRETE MEDIAN CAP
8. GRANULAR FILL FOR MEDIAN
9. 1/2" PREFORMED EXPANSION JOINT FILLER FOR BRIDGES

GENERAL NOTES

1. REMOVAL OF CONCRETE MEDIAN BARRIER AND CAP SHALL BE PAID FOR AS "ROCK EXCAVATION". WITH THE EXCEPTION OF WHERE THE REMOVAL IS FOR TEMPORARY GUIDERAIL ATTACHMENT. SEE SHEET HWY-02.
2. THE CROSS-SECTIONS SHOWN ARE TO BE USED FOR BOTH SIGN SUPPORT APPROACHES. THE 45" F-SHAPE MEDIAN BARRIER IS TO BE IN ACCORDANCE WITH STANDARD DETAIL HW-821_02a. SEE STRUCTURES SUBSET FOR CONCRETE MEDIAN BARRIER AT SIGN STRUCTURE FOUNDATIONS.
3. THE CONTRACTOR MUST PROVIDE A MINIMUM OF 100' OF FULL-HEIGHT 45" MEDIAN AS SHOWN IN THE PROPOSED 45" F-SHAPE CONCRETE MEDIAN CROSS-SECTION UPSTREAM FROM EACH SIGN STRUCTURE FOUNDATION.
4. ALL BITUMINOUS CONCRETE SURFACES THAT HAVE BEEN IN PLACE LONGER THAN 3 CALENDAR DAYS SHALL HAVE AN APPLICATION OF TACK COAT BEFORE NEXT LIFT.

REV.	DATE	REVISION DESCRIPTION	SHEET NO.

THE INFORMATION, INCLUDING ESTIMATED QUANTITIES OF WORK, SHOWN ON THESE SHEETS IS BASED ON LIMITED INVESTIGATIONS BY THE STATE AND IS IN NO WAY WARRANTED TO INDICATE THE CONDITIONS OF ACTUAL QUANTITIES OF WORK WHICH WILL BE REQUIRED.

Plotted Date: 7/12/2018

DESIGNER/DRAFTER: WJPG
CHECKED BY: NAI
SCALE IN FEET 0 40 80
SCALE 1"=40'

STATE OF CONNECTICUT
DEPARTMENT OF TRANSPORTATION

Filename: ...\HW_MSH_170.3447_HWY-03_THRU_HWY-11.dgn

SIGNATURE/BLOCK: OFFICE OF ENGINEERING
APPROVED BY: Matthew Vaz

PROJECT TITLE: STATEWIDE REPLACEMENT OF OVERHEAD SIGN SUPPORTS ON VARIOUS ROUTES

TOWN: VARIOUS

DRAWING TITLE: SITE 9: EAST HARTFORD HIGHWAY PLAN

PROJECT NO. 170-3447
DRAWING NO. HWY-09
SHEET NO. 01.04.09

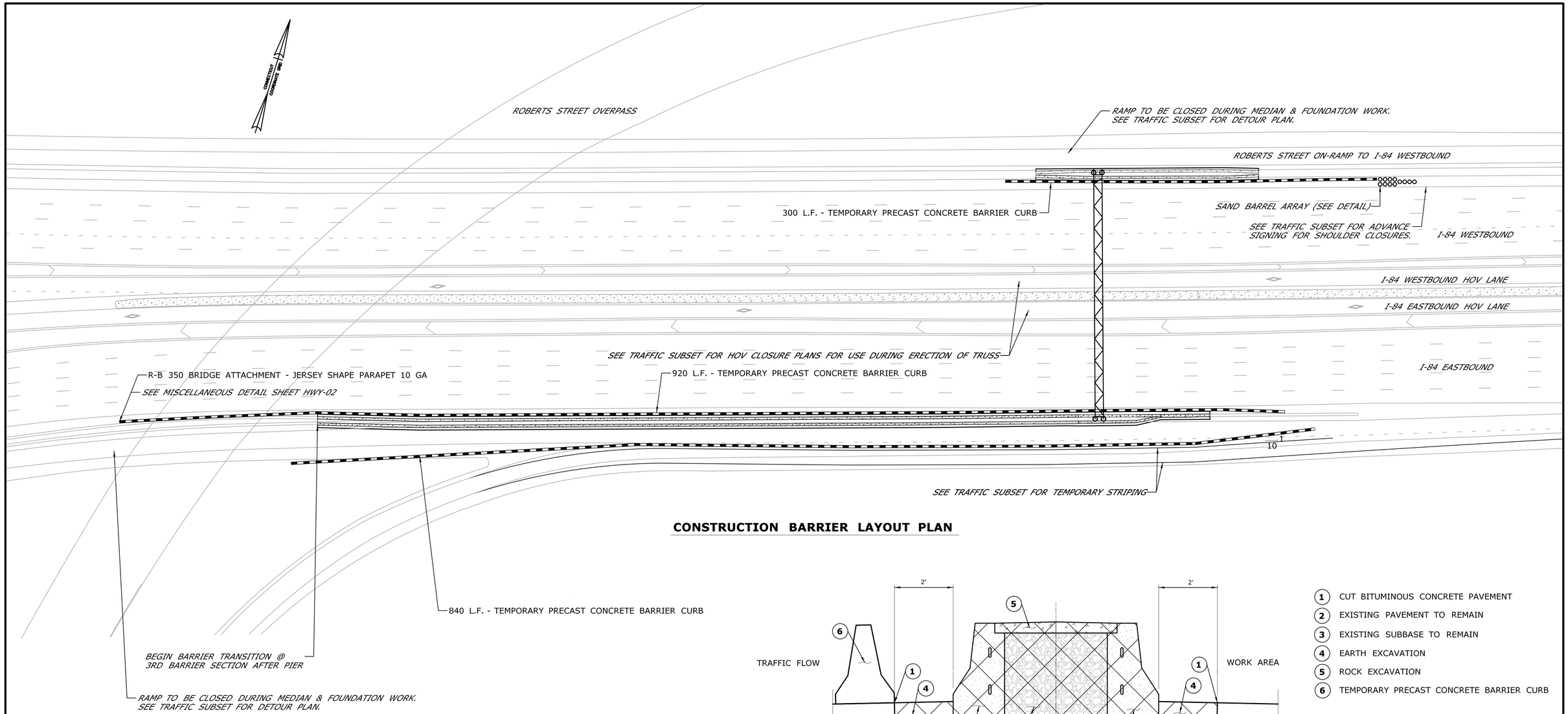

CONSTRUCTION BARRIER LAYOUT PLAN

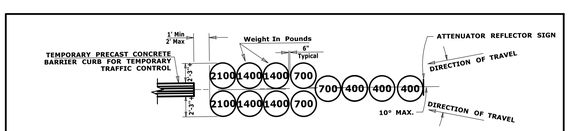

12 BARREL ARRAY

IMPACT ATTENUATION SYSTEM DESIGN FOR A SPEED OF 55 MPH OR MORE.

NOTE:

1. TEMPORARY IMPACT ATTENUATION SYSTEM IS TO BE INSTALLED IN FRONT OF THE LEADING END OF TEMPORARY PRECAST CONCRETE BARRIER CURB.
2. WORK WILL BE MEASURED AND PAID FOR AT THE CONTRACT UNIT PRICES FOR THE VARIOUS MODULES INVOLVED.
3. INSTALL ATTENUATOR REFLECTOR SIGN #S0-S032 ON 24"x30" SHEET ALUMINUM ATTACHED TO THE FRONT OF THE SYSTEM. REFER TO TRAFFIC STANDARD DETAILS. THE ATTENUATOR REFLECTOR IS TO BE PAID FOR UNDER SECTION 18.00 - IMPACT ATTENUATION SYSTEMS.

SUGGESTED SEQUENCE OF OPERATIONS

1. INSTALL TEMPORARY PRECAST CONCRETE BARRIER CURB (TPCBC). SEE HWY-02 FOR DETAILS REGARDING THE ATTACHMENT OF THE TPCBC TO THE EXISTING MEDIAN PRECAST CONCRETE BARRIER CURB WITH GUIDERAIL.
2. CUT BITUMINOUS CONCRETE PAVEMENT AS SHOWN IN PLAN AND CROSS-SECTION.
3. EXCAVATE MEDIAN BARRIER AND PAVEMENT STRUCTURE SHOWN IN CROSS-SECTION.
4. INSTALL PROPOSED BARRIER TRANSITIONS AND 45" MEDIAN BARRIER AS SHOWN ON PLAN. INSTALL SIGN STRUCTURE.
5. RECONSTRUCT PAVEMENT STRUCTURE.

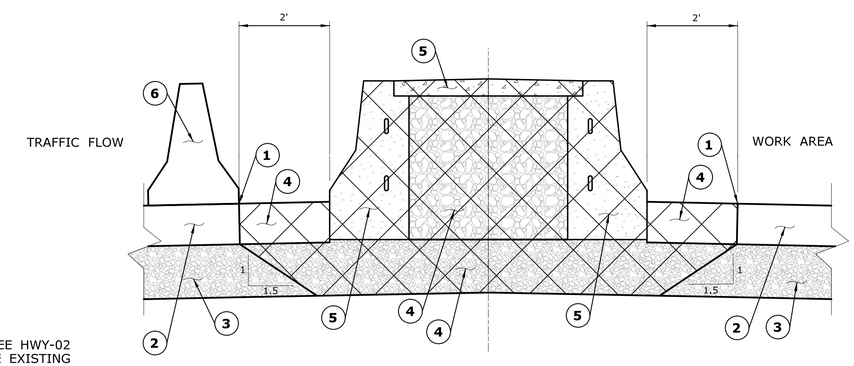

CROSS-SECTION: REMOVAL OF EXISTING 32" JERSEY SHAPE CONCRETE MEDIAN

N.T.S.

1. CUT BITUMINOUS CONCRETE PAVEMENT
2. EXISTING PAVEMENT TO REMAIN
3. EXISTING SUBBASE TO REMAIN
4. EARTH EXCAVATION
5. ROCK EXCAVATION
6. TEMPORARY PRECAST CONCRETE BARRIER CURB

LIMITS OF REMOVAL

REV.	DATE	REVISION DESCRIPTION	SHEET NO.

THE INFORMATION, INCLUDING ESTIMATED QUANTITIES OF WORK, SHOWN ON THESE SHEETS IS BASED ON LIMITED INVESTIGATIONS BY THE STATE AND IS IN NO WAY WARRANTED TO INDICATE THE CONDITIONS OF ACTUAL QUANTITIES OF WORK WHICH WILL BE REQUIRED.

Plotted Date: 7/16/2018

DESIGNER/DRAFTER: WJPG
CHECKED BY: NAI
SCALE IN FEET 0 40 80
SCALE 1"=40'

STATE OF CONNECTICUT
DEPARTMENT OF TRANSPORTATION

Filename: ...\HW_MSH_170_3447_HWY-03_THRU_HWY-11.dgn

SIGNATURE/BLOCK: OFFICE OF ENGINEERING
APPROVED BY: Matthew Vail

PROJECT TITLE: STATEWIDE REPLACEMENT OF OVERHEAD SIGN SUPPORTS ON VARIOUS ROUTES

TOWN: VARIOUS

DRAWING TITLE: SITE 9: EAST HARTFORD CONSTRUCTION PLAN

PROJECT NO. 170-3447
DRAWING NO. HWY-10
SHEET NO. 01.04.10