01.08 - CANTILEVER TRUSS SIGN SUPPORT

INDEX OF DRAWINGS

DRAWING NUMBER	DRAWING TITLE	DRAWING NUMBER	DRAWING TITLE
CTS-01	INDEX OF DRAWINGS		
CTS-02	4 CHORD CANTILEVER TRUSS SIGN STRUCTURE		
CTS-03	TRUSS CANTILEVER SIGN STRUCTURE DETAILS - 1		
CTS-04	TRUSS CANTILEVER SIGN STRUCTURE DETAILS - 2		
CTS-05	TRUSS CANTILEVER SIGN STRUCTURE DETAILS - 3		

THE DESIGN APPEARS TO CONFORM TO APPLICABLE CRITERIA. APPROVAL IS NOT TO BE CONSTRUED TO MEAN THAT ALL ASPECTS OF THE DESIGN HAVE BEEN PERSONALLY CHECKED BY THE UNDERSIGNED.

Bryan H. Reed, P.E.

Digitally signed by Bryan H. Reed, P.E.
Date: 2018.06.28 13:07:33-04'00'

TRANSPORTATION PRINCIPAL ENGINEER

REV.	DATE	REVISION DESCRIPTION	SHEET NO.

THE INFORMATION, INCLUDING ESTIMATED QUANTITIES OF WORK, SHOWN ON THESE SHEETS IS BASED ON LIMITED INVESTIGATIONS BY THE STATE AND IS IN NO WAY WARRANTED TO INDICATE THE CONDITIONS OF ACTUAL QUANTITIES OF WORK WHICH WILL BE REQUIRED.

Plotted Date: 6/19/2018

DESIGNER/DRAFTER: NJM

CHECKED BY: BKC

STATE OF CONNECTICUT
DEPARTMENT OF TRANSPORTATION

Filename: ...\170-3447_SB_Drawing_Index.dgn

SIGNATURE/ BLOCK:

OFFICE OF ENGINEERING

APPROVED BY:

PROJECT TITLE:

STATEWIDE REPLACEMENT OF OVERHEAD SIGN SUPPORTS ON VARIOUS ROUTES

TOWN: VARIOUS

DRAWING TITLE: INDEX OF DRAWINGS

PROJECT NO. 170-3447

DRAWING NO. CTS-01

SHEET NO. 01.08.01

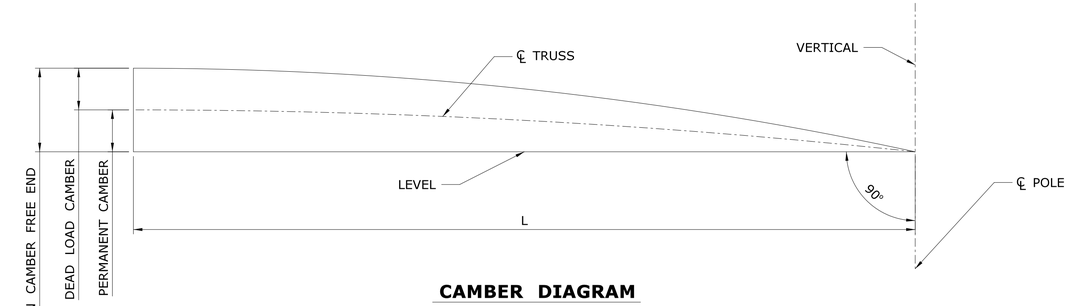

CAMBER DIAGRAM

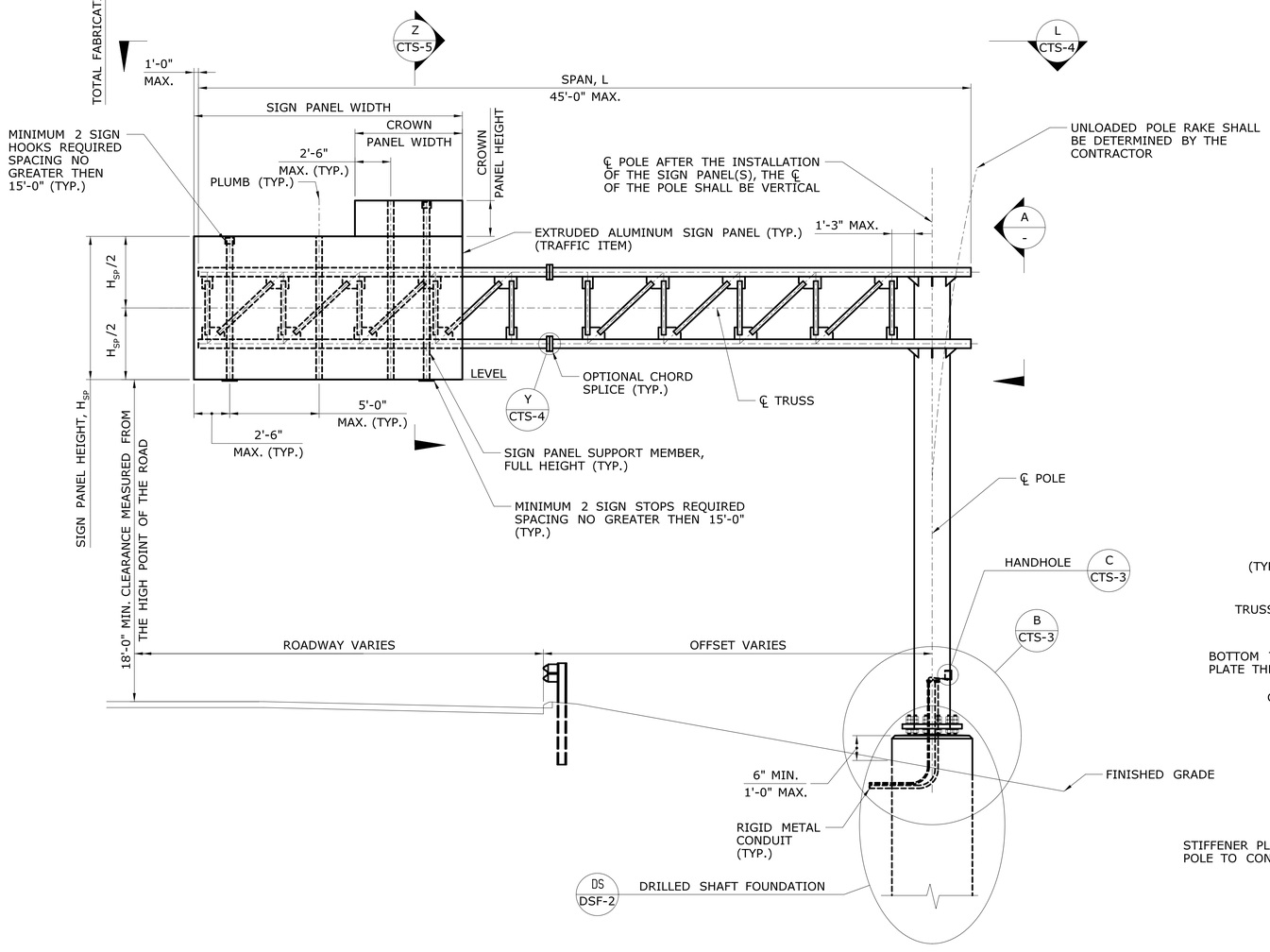

ELEVATION

SCALE: $\frac{1}{4}$" = 1'-0"

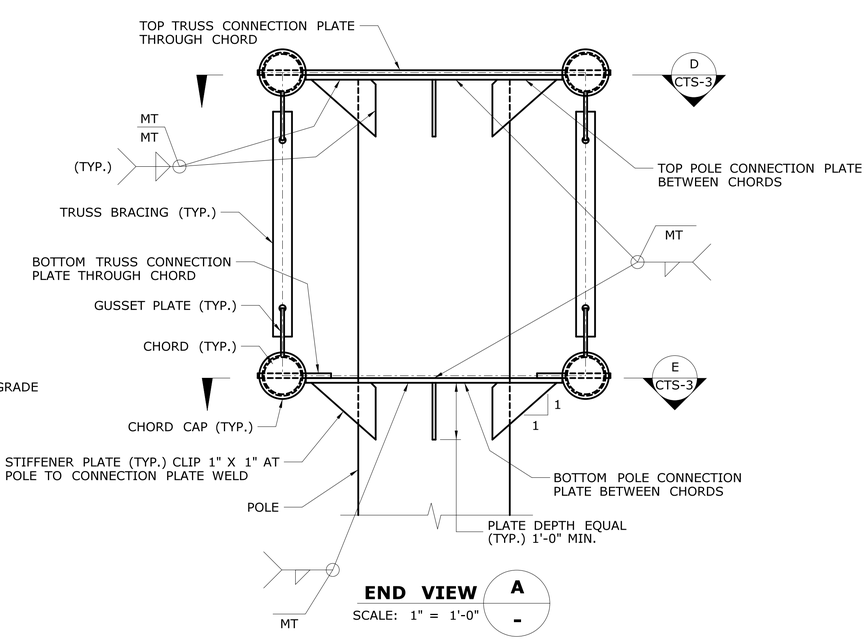

END VIEW A

SCALE: 1" = 1'-0"

NOTES

THE 4 CHORD TRUSS CANTILEVER SIGN STRUCTURE, INCLUDING THE ANCHORAGE TO THE FOUNDATION AND THE HARDWARE AND STRUCTURAL MEMBERS REQUIRED TO SUPPORT THE TRAFFIC APPURTENANCES, SHALL BE DESIGNED, FABRICATED, ERECTED, ASSEMBLED AND INSTALLED BY THE CONTRACTOR IN ACCORDANCE WITH THE SPECIAL PROVISION "4 CHORD TRUSS CANTILEVER SIGN STRUCTURE".

THE 4 CHORD TRUSS CANTILEVER SIGN STRUCTURE SHALL BE COMPOSED OF A 4 CHORD TRUSS HORIZONTAL OVERHEAD SPAN MEMBER SUPPORTED ON A SINGLE LINEAR TUBULAR POLE MEMBER.

THE DETAILS PRESENTED AND REFERRED TO ON THIS SHEET REPRESENT CONCEPTUAL DETAILS OF A SIGN STRUCTURE CONSISTENT WITH THE REQUIREMENTS IN THE SPECIFICATIONS. THE CONTRACTOR IS RESPONSIBLE FOR DETERMINING ALL DETAILS AND DIMENSIONS.

THE APPROXIMATE DIMENSIONS OF THE HORIZONTAL TRUSS AND THE POLE HEIGHTS ARE SHOWN IN PLAN AND ELEVATION ON THE TRAFFIC SHEETS. THE ACTUAL SIGN STRUCTURE DIMENSIONS SHALL BE DETERMINED BY THE CONTRACTOR BASED ON A THE HORIZONTAL AND VERTICAL CLEARANCES SHOWN ON THE TRAFFIC SHEETS, A FIELD SURVEY OF THE FINISHED GRADE AT THE SITE, THE ELEVATION OF THE TOP OF THE FINISHED FOUNDATION, THE LOCATIONS OF OVERHEAD AND SUBSURFACE UTILITIES, THE LOCATION OF THE DRAINAGE FACILITIES AND NOISE BARRIER WALL LOCATIONS.

THE SIGN PANELS, INCLUDING CROWN PANELS AS APPLICABLE, SHALL BE LOCATED ON THE HORIZONTAL TRUSS BASED ON THE DIMENSIONS SHOWN ON THE TRAFFIC SHEETS AND THE ACTUAL SIGN STRUCTURE DIMENSIONS. THE SIGN PANELS SHALL BE INSTALLED SYMMETRICALLY ABOUT THE CENTERLINE OF THE TRUSS. THE NUMBER AND SPACING OF PANEL SUPPORT MEMBERS SHALL BE DETERMINED BY THE CONTRACTOR BASED ON THE WIDTH OF THE SIGN AND CROWN PANELS AND THE SUPPORT MEMBER SPACING PARAMETERS. SIGN PANELS SHALL BE SUPPORTED BY NO LESS THAN 3 SUPPORT MEMBERS. CROWN PANELS SHALL BE SUPPORTED BY NO LESS THAN 2 SUPPORT MEMBERS.

THE CONTRACTOR SHALL BE RESPONSIBLE FOR THE PROPER FIT OF THE SIGN STRUCTURES ON THE CONSTRUCTED FOUNDATIONS. PRIOR TO FABRICATION, THE CONTRACTOR SHALL TAKE FIELD MEASUREMENTS TO VERIFY ALL SIGN STRUCTURE DIMENSIONS DEPENDANT UPON THE CONSTRUCTED FOUNDATIONS. THE OVERHEAD MEMBER SHALL BE TEMPORARILY SUPPORTED, IN ORDER TO BRING ALL PLATES OF THE CONNECTIONS INTO FIRM CONTACT, WHILE THE HIGH STRENGTH BOLTS ARE INSTALLED AND TENSIONED. THE CONTRACTOR SHALL TAKE THE PROPER PRECAUTIONS TO ENSURE THE STABILITY OF ALL STRUCTURAL ELEMENTS UNTIL THE TOTAL STRUCTURE IS ERECTED.

THE COST OF THE TUBULAR STEEL MEMBERS, STRUCTURAL STEEL ROLLED SHAPES, PLATES AND BARS, HIGH-STRENGTH BOLTS AND ANCHORAGE MATERIALS, INCLUDING THE DESIGN, FABRICATION, COATING AND ERECTION, SHALL BE PAID FOR UNDER THE ITEM "4 CHORD TRUSS CANTILEVER SIGN STRUCTURE". THE COST OF FOUNDATION EXCAVATION, REINFORCEMENT AND CONCRETE, INCLUDING THE DESIGN AND FABRICATION, SHALL BE PAID FOR UNDER THE ITEM "DRILLED SHAFT TRAFFIC STRUCTURE FOUNDATION".

REV.	DATE	REVISION DESCRIPTION	SHEET NO.

THE INFORMATION, INCLUDING ESTIMATED QUANTITIES OF WORK, SHOWN ON THESE SHEETS IS BASED ON LIMITED INVESTIGATIONS BY THE STATE AND IS IN NO WAY WARRANTED TO INDICATE THE CONDITIONS OF ACTUAL QUANTITIES OF WORK WHICH WILL BE REQUIRED.

Plotted Date: 6/19/2018

DESIGNER/DRAFTER: NJM
CHECKED BY: BKC
SCALE AS NOTED

STATE OF CONNECTICUT
DEPARTMENT OF TRANSPORTATION

Filename: ...\170-3447_SB_QCS-1_Elevation.dgn

SIGNATURE/BLOCK:
OFFICE OF ENGINEERING
APPROVED BY:

PROJECT TITLE:
STATEWIDE REPLACEMENT OF OVERHEAD SIGN SUPPORTS ON VARIOUS ROUTES

TOWN: VARIOUS

DRAWING TITLE:
4 CHORD CANTILEVER TRUSS SIGN STRUCTURE

PROJECT NO. 170-3447
DRAWING NO. CTS-02
SHEET NO. 01.08.02

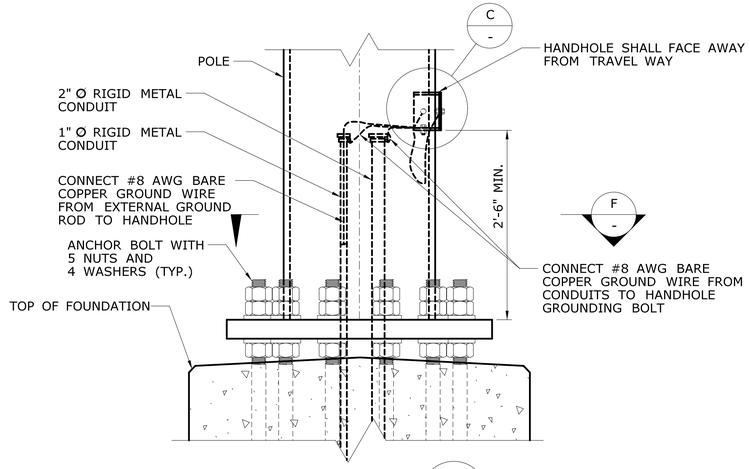

DETAIL B
SCALE: 1" = 1'-0"

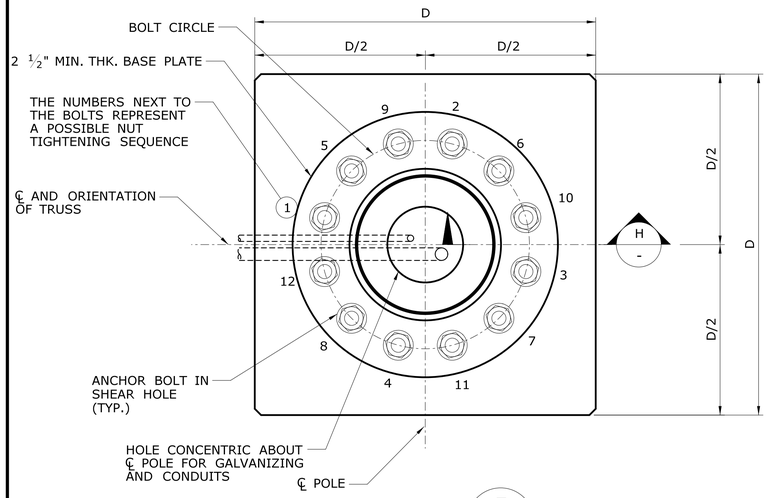

SECTION F
SCALE: 1" = 1'-0"

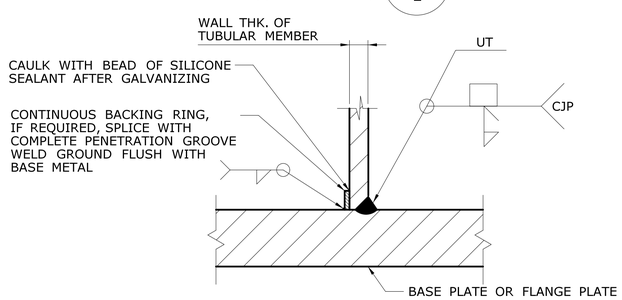

DETAIL H
SCALE: 3" = 1'-0"

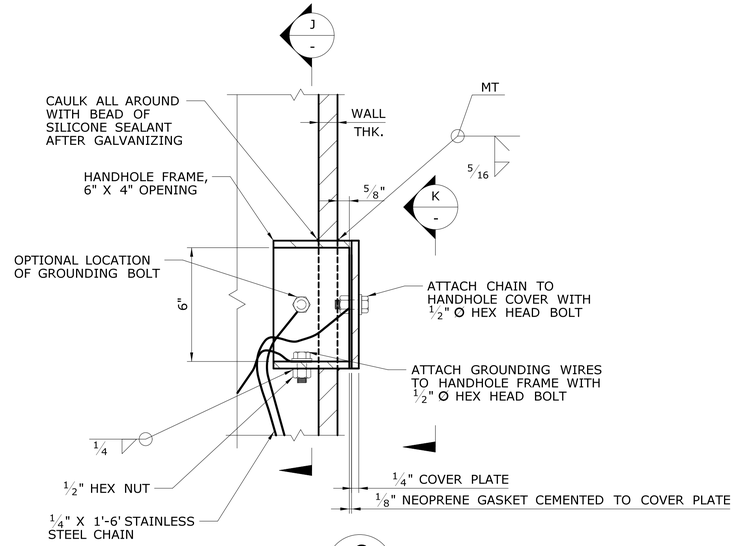

DETAIL C
SCALE: 3" = 1'-0"

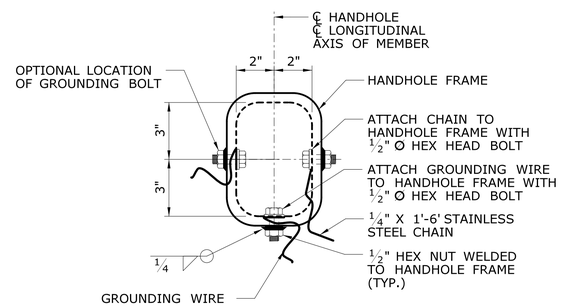

SECTION J
SCALE: 3" = 1'-0"

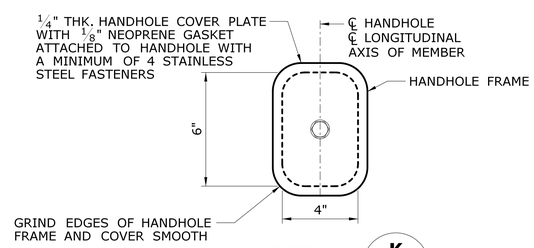

DETAIL K
SCALE: 3" = 1'-0"

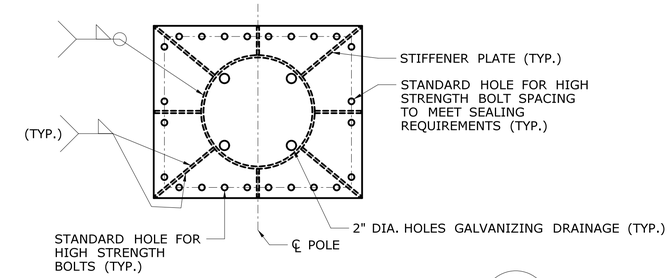

SECTION - TOP CONNECTION PLATE D
SCALE: ¾" = 1'-0"

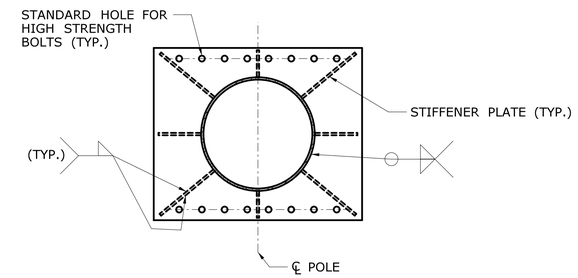

SECTION - BOTTOM CONNECTION PLATE E
SCALE: ¾" = 1'-0"

REV.	DATE	REVISION DESCRIPTION	SHEET NO.

THE INFORMATION, INCLUDING ESTIMATED QUANTITIES OF WORK, SHOWN ON THESE SHEETS IS BASED ON LIMITED INVESTIGATIONS BY THE STATE AND IS IN NO WAY WARRANTED TO INDICATE THE CONDITIONS OF ACTUAL QUANTITIES OF WORK WHICH WILL BE REQUIRED.

Plotted Date: 6/19/2018

DESIGNER/DRAFTER: NJM
CHECKED BY: BKC
SCALE AS NOTED

STATE OF CONNECTICUT
DEPARTMENT OF TRANSPORTATION

Filename: ...\170-3447_SB_QCS-2_Details_1.dgn

SIGNATURE/BLOCK:
OFFICE OF ENGINEERING
APPROVED BY:

PROJECT TITLE:
STATEWIDE REPLACEMENT OF OVERHEAD SIGN SUPPORTS ON VARIOUS ROUTES

TOWN: VARIOUS

DRAWING TITLE:
TRUSS CANTILEVER SIGN STRUCTURE DETAILS - 1

PROJECT NO. 170-3447
DRAWING NO. CTS-03
SHEET NO. 01.08.03

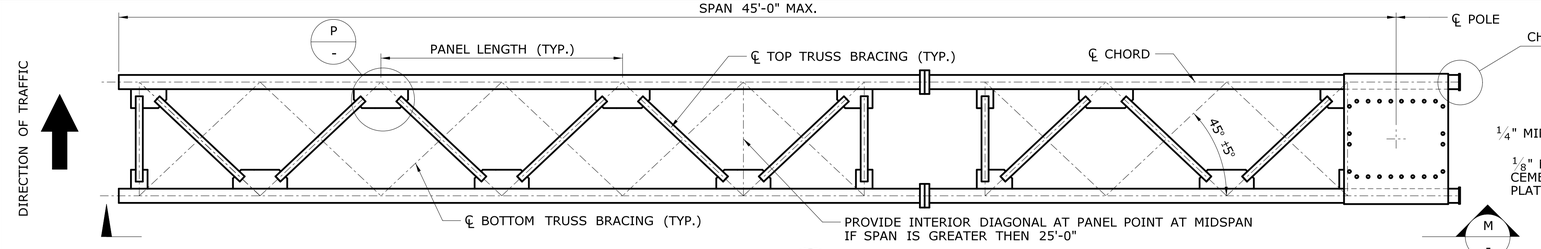

PLAN L
SCALE: 3/8" = 1'-0"

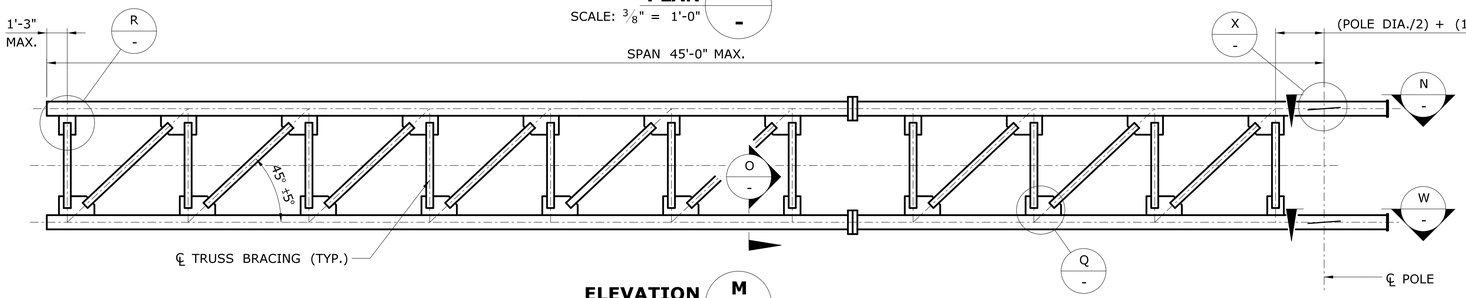

ELEVATION M
SCALE: 3/8" = 1'-0"

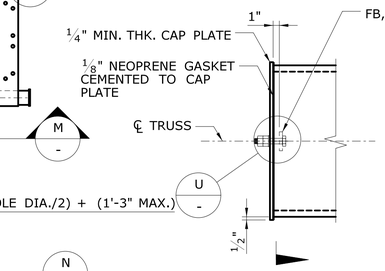

DETAIL S
SCALE: 1" = 1'-0"

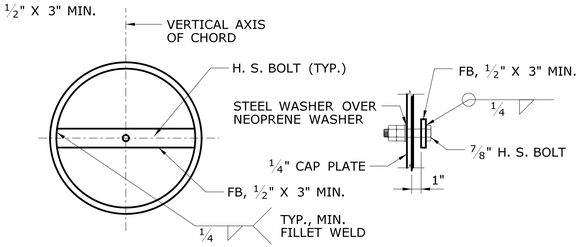

SECTION T
SCALE: 1" = 1'-0"

DETAIL U
SCALE: 1 1/2" = 1'-0"

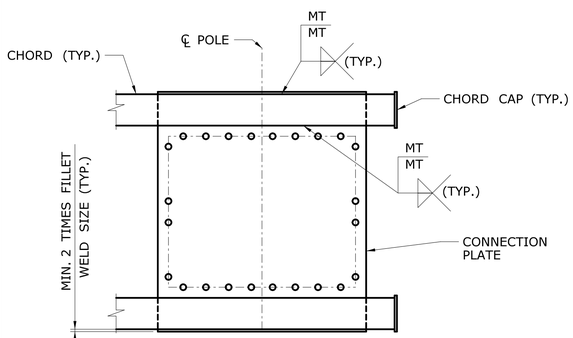

VIEW - TOP TRUSS CONNECTON PLATE N
SCALE: 3/4" = 1'-0"

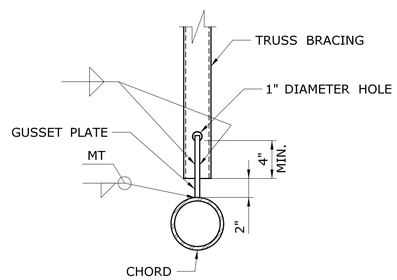

SECTION O
SCALE: 1 1/2" = 1'-0"

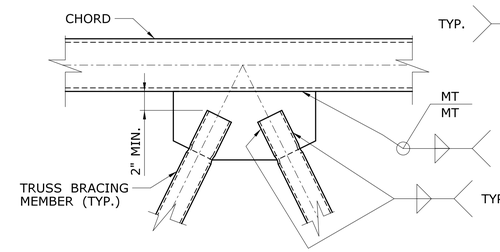

GUSSET PLATE DETAIL P
SCALE: 1 1/2" = 1'-0"

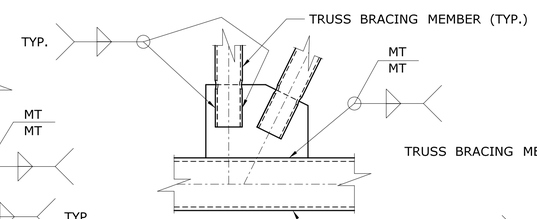

GUSSET PLATE DETAIL Q
SCALE: 1 1/2" = 1'-0"

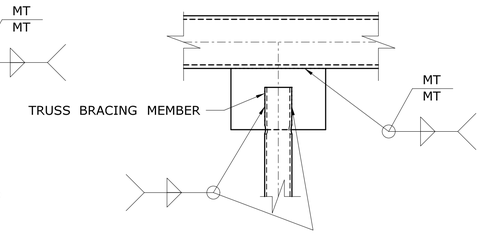

GUSSET PLATE DETAIL R
SCALE: 1 1/2" = 1'-0"

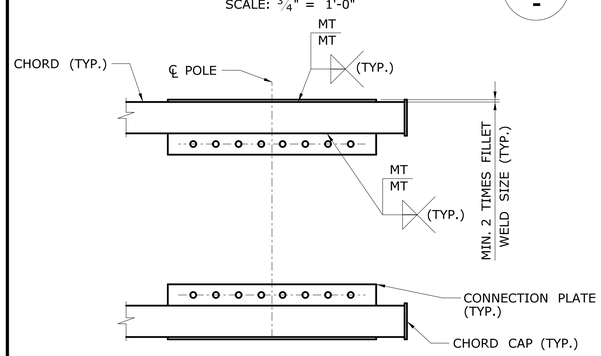

VIEW - BOTTOM TRUSS CONNECTION PLATE W
SCALE: 3/4" = 1'-0"

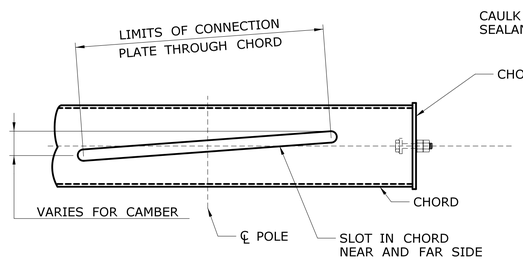

SLOTTED CHORD DETAIL X
SCALE: 1 1/2" = 1'-0"

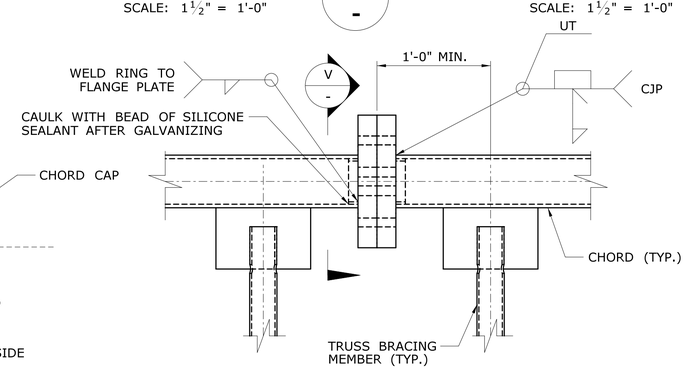

CHORD SPLICE Y
SCALE: 1 1/2" = 1'-0"

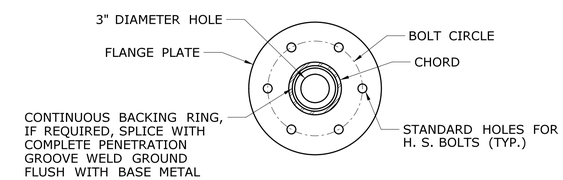

SECTION V
SCALE: 1 1/2" = 1'-0"

REV.	DATE	REVISION DESCRIPTION	SHEET NO.

THE INFORMATION, INCLUDING ESTIMATED QUANTITIES OF WORK, SHOWN ON THESE SHEETS IS BASED ON LIMITED INVESTIGATIONS BY THE STATE AND IS IN NO WAY WARRANTED TO INDICATE THE CONDITIONS OF ACTUAL QUANTITIES OF WORK WHICH WILL BE REQUIRED.

Plotted Date: 6/19/2018

DESIGNER/DRAFTER: NJM
CHECKED BY: BKC
SCALE AS NOTED

STATE OF CONNECTICUT
DEPARTMENT OF TRANSPORTATION

Filename: ...\170-3447_SB_QCS-3_Details_2.dgn

SIGNATURE/BLOCK: OFFICE OF ENGINEERING
APPROVED BY: Mary E. Baker

PROJECT TITLE: STATEWIDE REPLACEMENT OF OVERHEAD SIGN SUPPORTS ON VARIOUS ROUTES

TOWN: VARIOUS

DRAWING TITLE: TRUSS CANTILEVER SIGN STRUCTURE DETAILS - 2

PROJECT NO. 170-3447
DRAWING NO. CTS-04
SHEET NO. 01.08.04

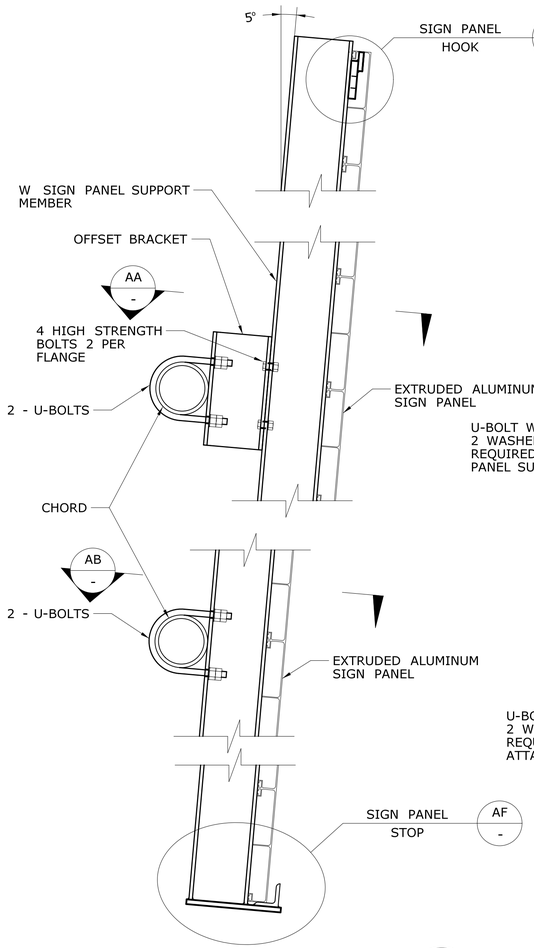

VERTICAL ATTACHMENT DETAIL Z -

SCALE: $1\frac{1}{2}$" = 1'-0"

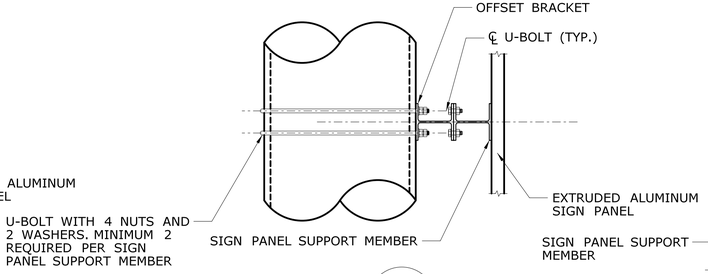

SECTION AA -

SCALE: 1" = 1'-0"

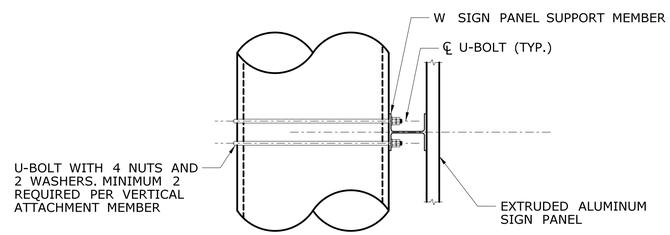

SECTION AB -

SCALE: 1" = 1'-0"

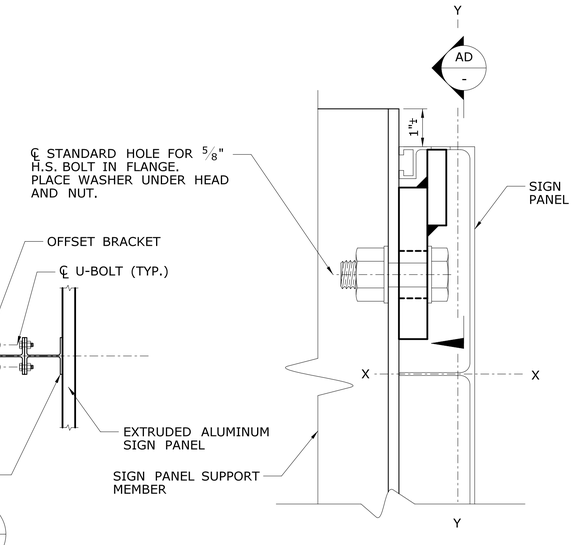

DETAIL AC -

SCALE: 6" = 1'-0"

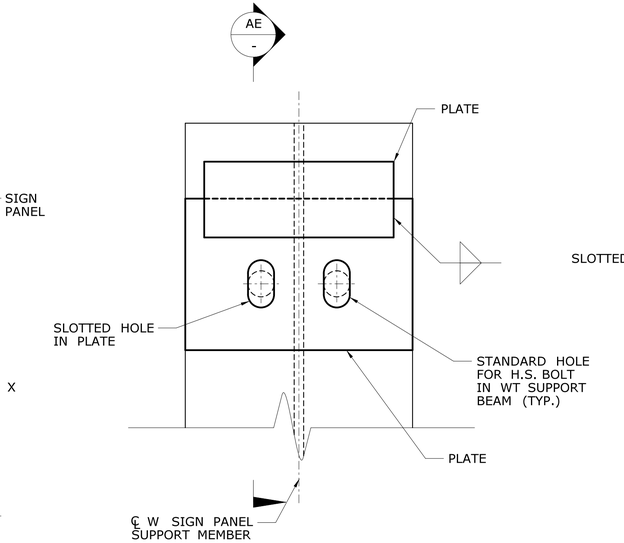

SECTION AD -

SCALE: 6" = 1'-0"

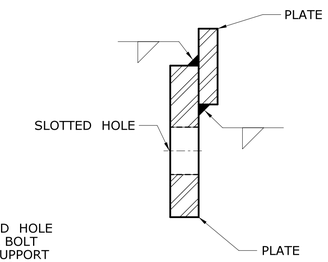

SECTION AE -

SCALE: 6" = 1'-0"

TYPICAL SIGN HOOK DETAILS

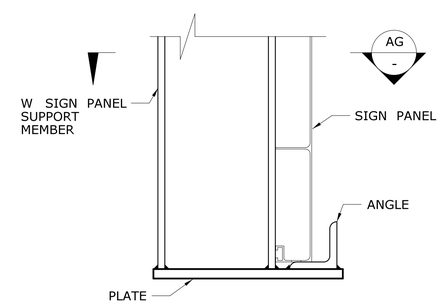

DETAIL AF -

SCALE: 3" = 1'-0"

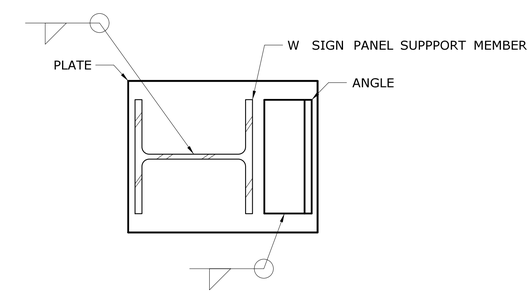

DETAIL AG -

SCALE: 3" = 1'-0"

TYPICAL SIGN STOP DETAILS

REV.	DATE	REVISION DESCRIPTION	SHEET NO.

THE INFORMATION, INCLUDING ESTIMATED QUANTITIES OF WORK, SHOWN ON THESE SHEETS IS BASED ON LIMITED INVESTIGATIONS BY THE STATE AND IS IN NO WAY WARRANTED TO INDICATE THE CONDITIONS OF ACTUAL QUANTITIES OF WORK WHICH WILL BE REQUIRED.

Plotted Date: 6/19/2018

DESIGNER/DRAFTER: NJM

CHECKED BY: BKC

SCALE AS NOTED

STATE OF CONNECTICUT
DEPARTMENT OF TRANSPORTATION

Filename: ...\170-3447_SB_QCS-4_Details_3.dgn

SIGNATURE/BLOCK: OFFICE OF ENGINEERING

APPROVED BY: Mary E. Baker

PROJECT TITLE: STATEWIDE REPLACEMENT OF OVERHEAD SIGN SUPPORTS ON VARIOUS ROUTES

TOWN: VARIOUS

DRAWING TITLE: TRUSS CANTILEVER SIGN STRUCTURE DETAILS - 3

PROJECT NO. 170-3447

DRAWING NO. CTS-05

SHEET NO. 01.08.05