01.12 - STRUCTURES SITE NO. 9 (EAST HARTFORD)

INDEX OF DRAWINGS

DRAWING NUMBER	DRAWING TITLE	DRAWING NUMBER	DRAWING TITLE
S-1	INDEX OF DRAWINGS		
S-2	SITE NO. 9 FOUNDATION DETAILS - 1		
S-3	SITE NO. 9 FOUNDATION DETAILS - 2		
S-4	SITE NO. 9 FOUNDATION DETAILS - 3		

THE DESIGN APPEARS TO CONFORM TO APPLICABLE CRITERIA. APPROVAL IS NOT TO BE CONSTRUED TO MEAN THAT ALL ASPECTS OF THE DESIGN HAVE BEEN PERSONALLY CHECKED BY THE UNDERSIGNED.

Mary E. Baker, P.E.
2018.07.16
08:35:22-04'00'

TRANSPORTATION PRINCIPAL ENGINEER

REV.	DATE	REVISION DESCRIPTION	SHEET NO.

THE INFORMATION, INCLUDING ESTIMATED QUANTITIES OF WORK, SHOWN ON THESE SHEETS IS BASED ON LIMITED INVESTIGATIONS BY THE STATE AND IS IN NO WAY WARRANTED TO INDICATE THE CONDITIONS OF ACTUAL QUANTITIES OF WORK WHICH WILL BE REQUIRED.

Plotted Date: 7/12/2018

DESIGNER/DRAFTER: NJM

CHECKED BY: BKC

STATE OF CONNECTICUT
DEPARTMENT OF TRANSPORTATION

Filename: ...\170-3447_SB_Site 9_East Hartford_Drawing Index_S-1.dgn

SIGNATURE/ BLOCK:
OFFICE OF ENGINEERING

APPROVED BY:

PROJECT TITLE:
STATEWIDE REPLACEMENT OF OVERHEAD SIGN SUPPORTS ON VARIOUS ROUTES

TOWN: EAST HARTFORD

DRAWING TITLE: INDEX OF DRAWINGS

PROJECT NO. 170-3447

DRAWING NO. S-1

SHEET NO. 01.12.01

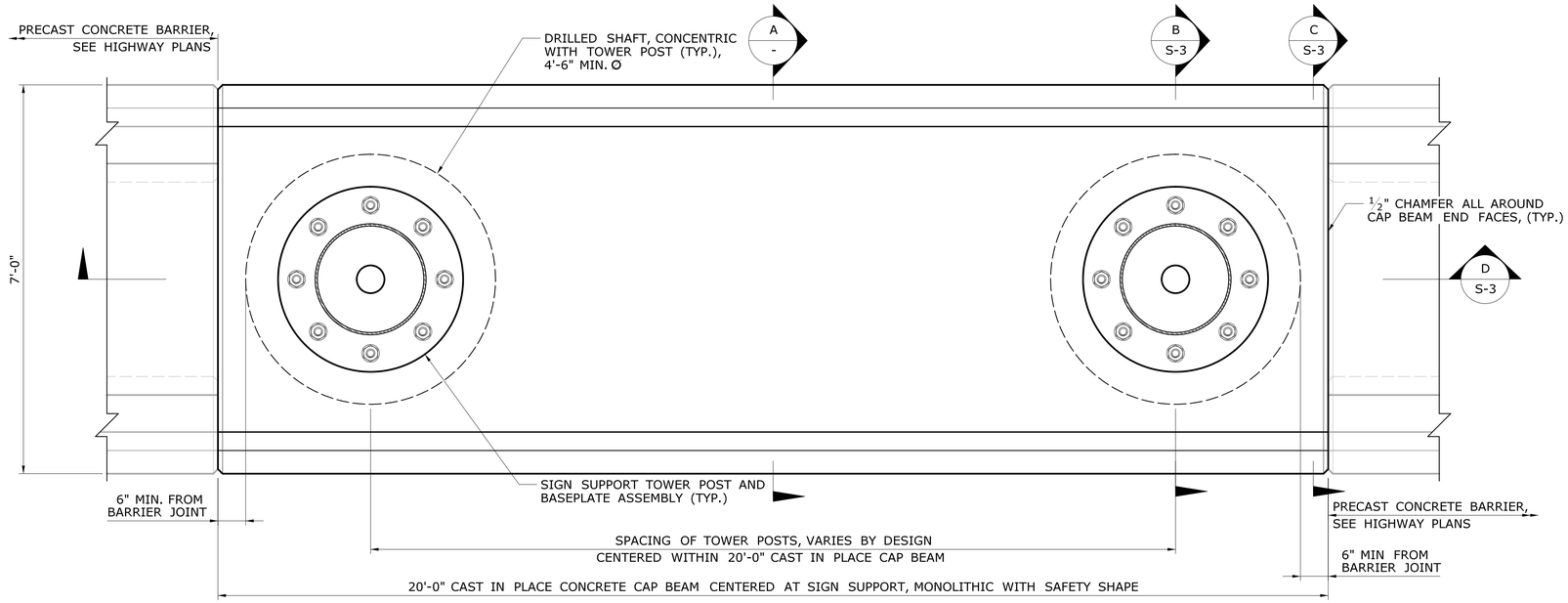

PLAN - OVERHEAD TRUSS SIGN SUPPORT FOUNDATION
SITE NO. 9 (EAST HARTFORD)

SCALE: ¾" = 1'-0"

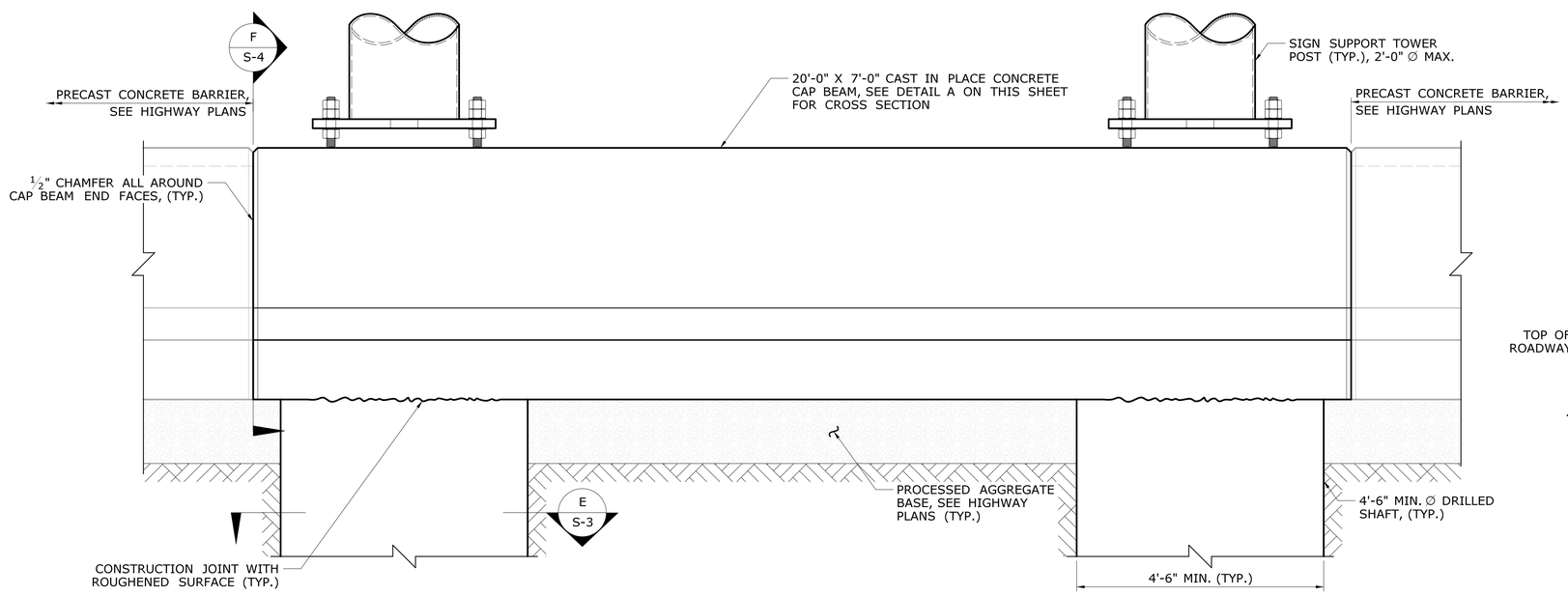

ELEVATION - OVERHEAD TRUSS SIGN SUPPORT FOUNDATION
SITE NO. 9 (EAST HARTFORD)

SCALE: ¾" = 1'-0"

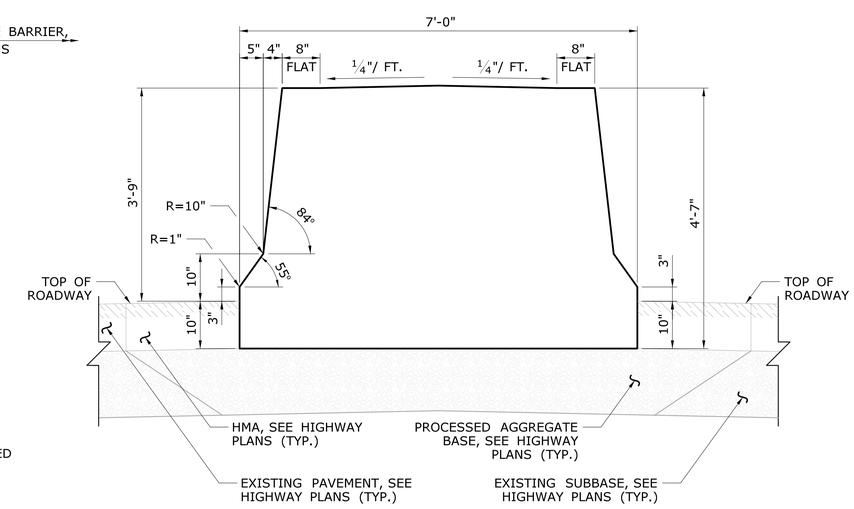

PARTIAL ELEVATION SECTION - CAP BEAM SAFETY SHAPE DETAIL

A
-

SCALE: ¾" = 1'-0"

SITE NO. 9 (EAST HARTFORD) FOUNDATION NOTES

THE FOUNDATION FOR THE OVERHEAD TRUSS SIGN SUPPORT SHALL BE DESIGNED, FABRICATED, AND CONSTRUCTED BY THE CONTRACTOR IN ACCORDANCE WITH THE SPECIAL PROVISION "OVERHEAD TRUSS SIGN SUPPORT FOUNDATION". UNDER THIS ITEM THE CONTRACTOR SHALL CONSTRUCT A DRILLED SHAFT SYSTEM AS THE FOUNDATION UNIT FOR SITE NO. 9 (EAST HARTFORD).

FOR THE DESIGN OF THE DRILLED SHAFT FOUNDATIONS, THE CONTRACTOR IS RESPONSIBLE FOR DETERMINING THE SUBSURFACE CONDITIONS (CHARACTER OF THE SOIL AND ROCK, PRESENCE OF GROUND WATER, ETC.) IN THE LOCATION OF, ADJACENT TO AND BELOW THE FOUNDATIONS. THE CONTRACTOR SHALL PERFORM A SUBSURFACE INVESTIGATION FOR EACH FOUNDATION LOCATION.

THE DESIGN OF THE FOUNDATION SHALL BE COORDINATED WITH THE SIGN SUPPORT AND THE SUPPORT ANCHORAGE TO ENSURE THAT THE FOUNDATION IS ADEQUATE FOR THE SUPPORT REACTIONS AND TO AVOID CONFLICTS BETWEEN THE EMBEDDED SUPPORT ANCHORAGE AND THE FOUNDATION REINFORCEMENT.

THE SIGN SUPPORT SHALL NOT BE INSTALLED UNTIL ALL CONCRETE HAS ATTAINED A COMPRESSIVE STRENGTH, f'_c, GREATER THAN OR EQUAL TO 4,000 PSI BASED ON PHYSICAL TESTING.

ADDITIONAL RIGID METAL CONDUITS SHALL BE PROVIDED AS DIRECTED BY THE ENGINEER.

ALL EMPTY RIGID METAL CONDUITS SHALL BE CAPPED.

STAINLESS STEEL WIRE MESH SHALL BE INSTALLED TIGHT TO THE TOP OF THE FOUNDATIONS AND ATTACHED TO SIGN SUPPORT STRUCTURE BASEPLATES. THE MESH SHALL BE ATTACHED TO THE BASEPLATE WITH THE USE OF AN ADJUSTABLE STAINLESS STEEL HOSE CLAMP OF A DIAMETER THAT IS COMPATIBLE WITH THE GEOMETRY OF THE BASEPLATE.

THE RIGID METAL CONDUIT SWEEPS SHALL EXTEND A MINIMUM 2'-0" FROM THE SIDE OF THE FOUNDATION AND SHALL BE PLACED A MINIMUM OF 2'-6" BELOW FINISHED GRADE.

REINFORCING STEEL SHALL BE ASTM A615, GRADE 60 REINFORCEMENT CONFORMING TO THE REQUIREMENTS OF ARTICLE M.06.01. THE REINFORCING STEEL COMPRISING THE DRILLED SHAFT CAGES SHALL BE UNCOATED. REINFORCING STEEL WITHIN THE CAP BEAM SHALL BE GALVANIZED IN ACCORDANCE WITH ASTM A767.

PLAIN DOWELS USED IN THE CONNECTION OF THE CAP BEAM TO THE PRECAST CONCRETE BARRIER CURB SHALL GALVANIZED IN ACCORDANCE WITH ASTM A767 AND SHALL BE PAID FOR UNDER THE ITEM "F-SHAPE PRECAST CONCRETE BARRIER CURB (21" X 45")," SEE HIGHWAY PLANS

THE NO. 8 AWG BARE COPPER CONDUCTOR SHALL BE CONNECTED TO THE EXTERNAL GROUND ROD USING A GROUNDING CLAMP APPROVED FOR DIRECT BURIAL.

THE COST OF FOUNDATION EXCAVATION, REINFORCEMENT AND CONCRETE, INCLUDING THE DESIGN AND FABRICATION, AND INCIDENTAL CONSTRUCTION SHALL BE PAID FOR UNDER THE ITEM "OVERHEAD TRUSS SIGN SUPPORT FOUNDATION".

REV.	DATE	REVISION DESCRIPTION	SHEET NO.

THE INFORMATION, INCLUDING ESTIMATED QUANTITIES OF WORK, SHOWN ON THESE SHEETS IS BASED ON LIMITED INVESTIGATIONS BY THE STATE AND IS IN NO WAY WARRANTED TO INDICATE THE CONDITIONS OF ACTUAL QUANTITIES OF WORK WHICH WILL BE REQUIRED.

Plotted Date: 7/12/2018

DESIGNER/DRAFTER: NJM
CHECKED BY: BKC
SCALE AS NOTED

STATE OF CONNECTICUT
DEPARTMENT OF TRANSPORTATION

Filename: ...\170-3447_Site 9_Foundation Detail 1_S-2.dgn

SIGNATURE/BLOCK: OFFICE OF ENGINEERING
APPROVED BY: Mary E. Baker

PROJECT TITLE: STATEWIDE REPLACEMENT OF OVERHEAD SIGN SUPPORTS ON VARIOUS ROUTES

TOWN: EAST HARTFORD

DRAWING TITLE: SITE NO. 9 FOUNDATION DETAILS - 1

PROJECT NO. 170-3447
DRAWING NO. S-2
SHEET NO. 01.12.02

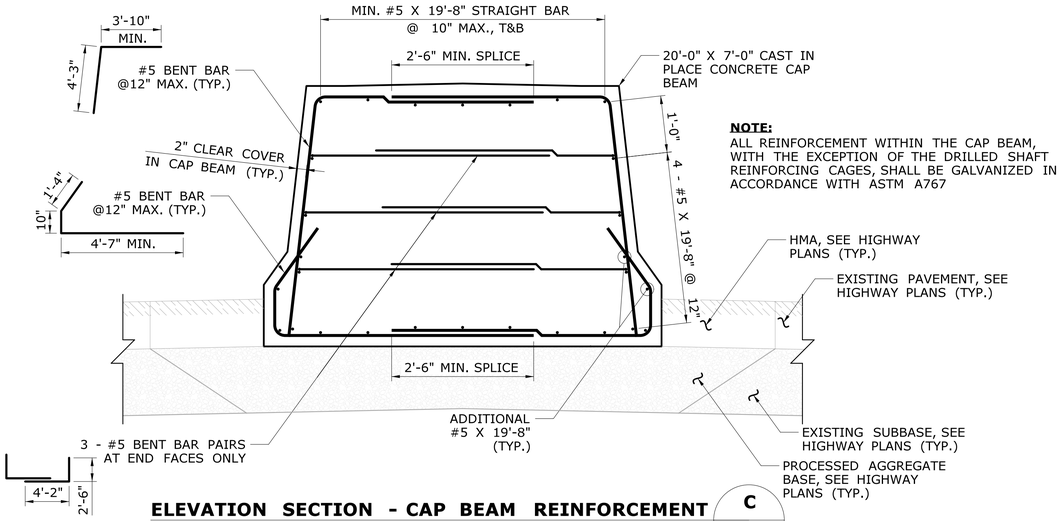

NOTE:
ALL REINFORCEMENT WITHIN THE CAP BEAM, WITH THE EXCEPTION OF THE DRILLED SHAFT REINFORCING CAGES, SHALL BE GALVANIZED IN ACCORDANCE WITH ASTM A767

ELEVATION SECTION - CAP BEAM REINFORCEMENT BETWEEN DRILLED SHAFTS

C
-

SCALE: 3/4" = 1'-0"

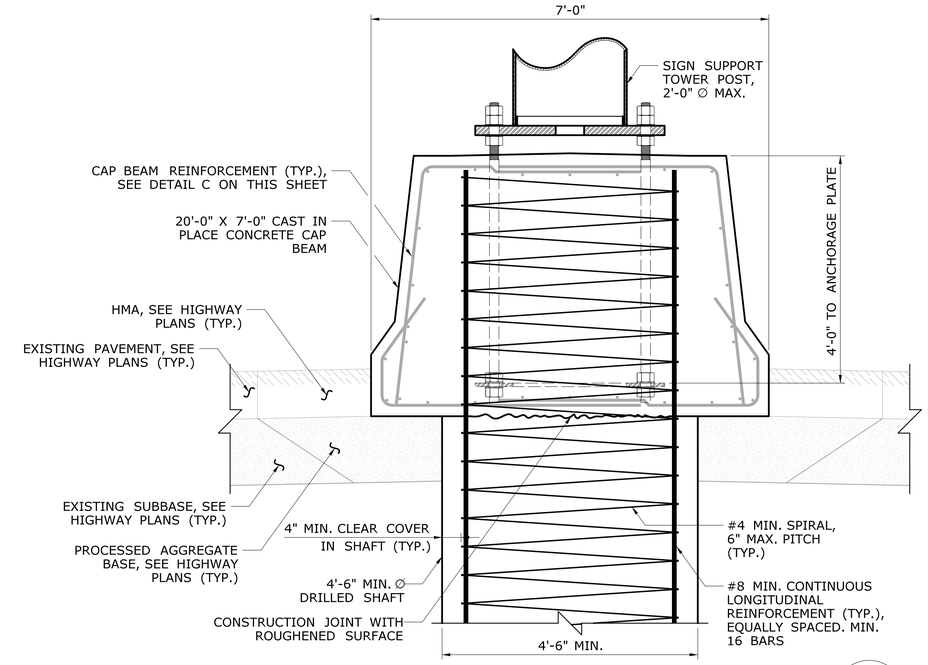

ELEVATION SECTION - CAP BEAM REINFORCEMENT AT DRILLED SHAFT

B
-

SCALE: 3/4" = 1'-0"

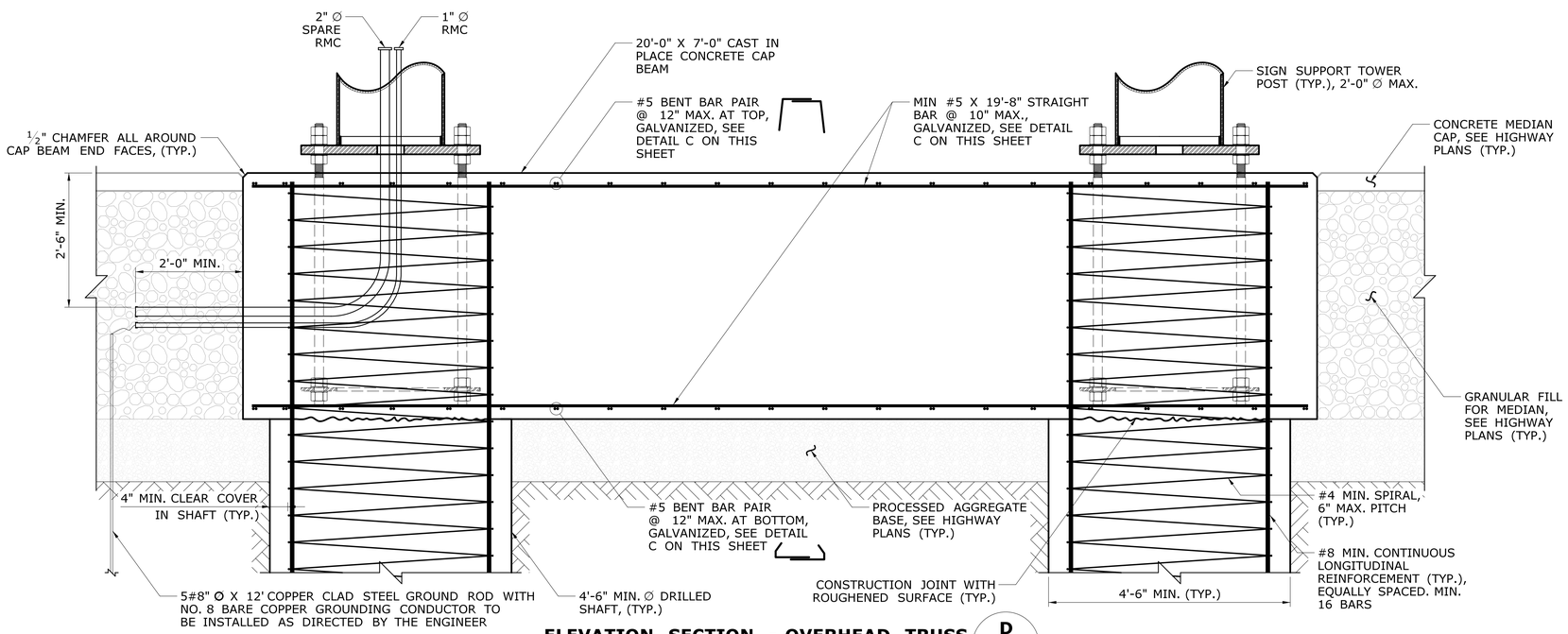

ELEVATION SECTION - OVERHEAD TRUSS SIGN SUPPORT FOUNDATION

D
-

SCALE: 3/4" = 1'-0"

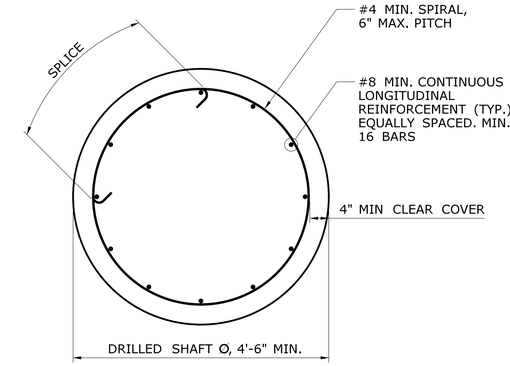

PLAN SECTION - DRILLED SHAFT REINFORCEMENT

E
-

SCALE: 3/4" = 1'-0"

REV.	DATE	REVISION DESCRIPTION	SHEET NO.

THE INFORMATION, INCLUDING ESTIMATED QUANTITIES OF WORK, SHOWN ON THESE SHEETS IS BASED ON LIMITED INVESTIGATIONS BY THE STATE AND IS IN NO WAY WARRANTED TO INDICATE THE CONDITIONS OF ACTUAL QUANTITIES OF WORK WHICH WILL BE REQUIRED.

Plotted Date: 7/12/2018

DESIGNER/DRAFTER: NJM
CHECKED BY: BKC
SCALE AS NOTED

STATE OF CONNECTICUT
DEPARTMENT OF TRANSPORTATION

Filename: ..\170-3447_Site 9_Foundation Detail 1_S-3.dgn

SIGNATURE/BLOCK:
OFFICE OF ENGINEERING
APPROVED BY:

PROJECT TITLE:
STATEWIDE REPLACEMENT OF OVERHEAD SIGN SUPPORTS ON VARIOUS ROUTES

TOWN: EAST HARTFORD

DRAWING TITLE:
SITE NO. 9
FOUNDATION DETAILS - 2

PROJECT NO. 170-3447
DRAWING NO. S-3
SHEET NO. 01.12.03

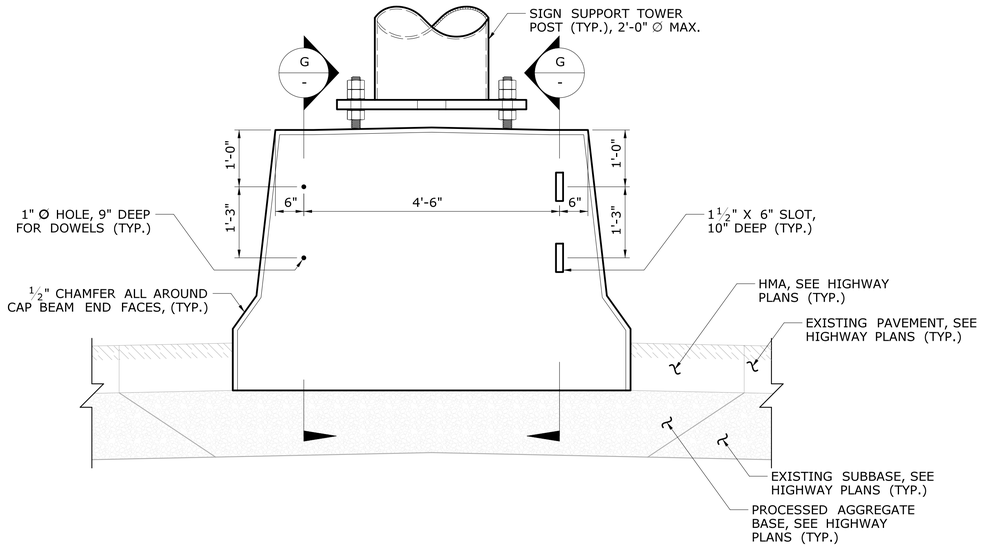

ELEVATION - CAP BEAM AT CONNECTION TO PRECAST CONCRETE BARRIER (F / -)

SCALE: ¾" = 1'-0"

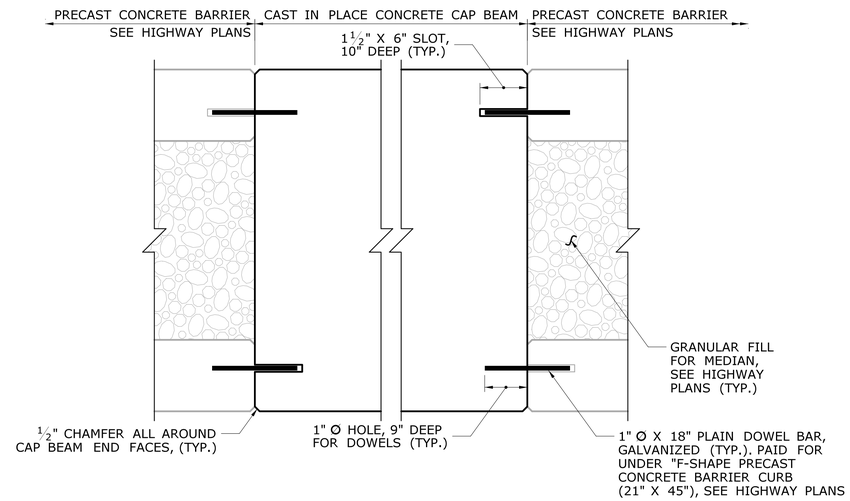

PLAN SECTION - CAP BEAM AT CONNECTION TO PRECAST CONCRETE BARRIER (H / -)

SCALE: ¾" = 1'-0"

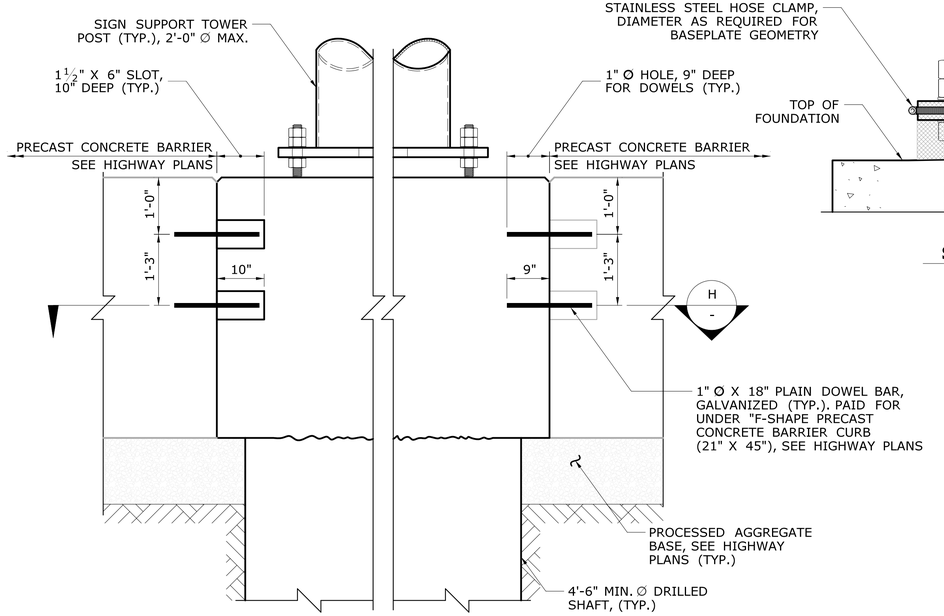

ELEVATION SECTION - CAP BEAM AT CONNECTION TO PRECAST CONCRETE BARRIER (G / -)

SCALE: ¾" = 1'-0"

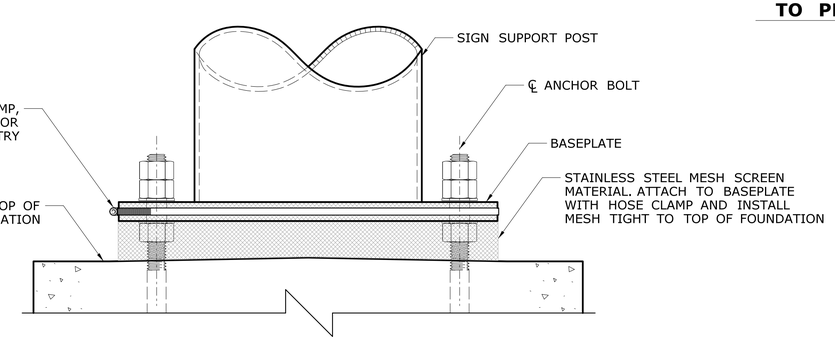

SCREEN AT BASEPLATE DETAIL

SCALE: 1½" = 1'-0"

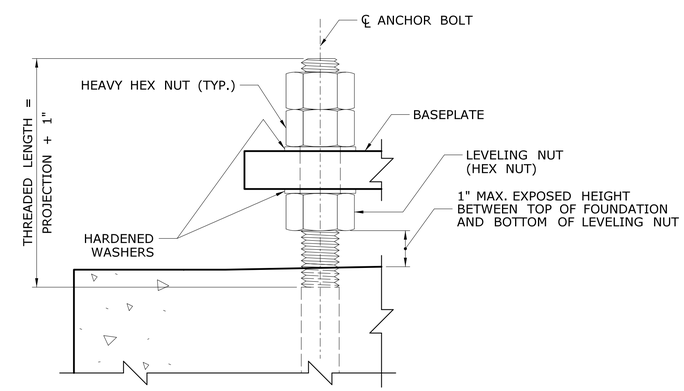

BASEPLATE CONNECTION DETAIL

SCALE: 3" = 1'-0"

REV.	DATE	REVISION DESCRIPTION	SHEET NO.

THE INFORMATION, INCLUDING ESTIMATED QUANTITIES OF WORK, SHOWN ON THESE SHEETS IS BASED ON LIMITED INVESTIGATIONS BY THE STATE AND IS IN NO WAY WARRANTED TO INDICATE THE CONDITIONS OF ACTUAL QUANTITIES OF WORK WHICH WILL BE REQUIRED.

Plotted Date: 7/12/2018

DESIGNER/DRAFTER: NJM

CHECKED BY: BKC

SCALE AS NOTED

STATE OF CONNECTICUT
DEPARTMENT OF TRANSPORTATION

Filename: ..\170-3447_Site 9_Foundation Detail 1_S-4.dgn

SIGNATURE/BLOCK:
OFFICE OF ENGINEERING

APPROVED BY:

PROJECT TITLE:
STATEWIDE REPLACEMENT OF OVERHEAD SIGN SUPPORTS ON VARIOUS ROUTES

TOWN: EAST HARTFORD

DRAWING TITLE:
SITE NO. 9
FOUNDATION DETAILS - 3

PROJECT NO. 170-3447

DRAWING NO. S-4

SHEET NO. 01.12.04