01.06 - DRILLED SHAFT FOUNDATION

INDEX OF DRAWINGS

DRAWING NUMBER	DRAWING TITLE	DRAWING NUMBER	DRAWING TITLE
DSF-01	INDEX OF DRAWINGS		
DSF-02	DRILLED SHAFT TRAFFIC STRUCTURE FOUNDATION		

THE DESIGN APPEARS TO CONFORM TO APPLICABLE CRITERIA. APPROVAL IS NOT TO BE CONSTRUED TO MEAN THAT ALL ASPECTS OF THE DESIGN HAVE BEEN PERSONALLY CHECKED BY THE UNDERSIGNED.

Bryan H. Reed, P.E.

Digitally signed by Bryan H. Reed, P.E.
Date: 2018.06.28 12:51:26-04'00'

TRANSPORTATION PRINCIPAL ENGINEER

REV.	DATE	REVISION DESCRIPTION	SHEET NO.

THE INFORMATION, INCLUDING ESTIMATED QUANTITIES OF WORK, SHOWN ON THESE SHEETS IS BASED ON LIMITED INVESTIGATIONS BY THE STATE AND IS IN NO WAY WARRANTED TO INDICATE THE CONDITIONS OF ACTUAL QUANTITIES OF WORK WHICH WILL BE REQUIRED.

Plotted Date: 6/27/2018

DESIGNER/DRAFTER: NJM

CHECKED BY: BKC

STATE OF CONNECTICUT
DEPARTMENT OF TRANSPORTATION

Filename: ...\170-3447_SB_Index of Drawings_DSF1_Index.dgn

SIGNATURE/ BLOCK:

OFFICE OF ENGINEERING

APPROVED BY:

PROJECT TITLE:

STATEWIDE REPLACEMENT OF OVERHEAD SIGN SUPPORTS ON VARIOUS ROUTES

TOWN: VARIOUS

DRAWING TITLE: INDEX OF DRAWINGS

PROJECT NO. 170-3447

DRAWING NO. DSF-01

SHEET NO. 01.06.01

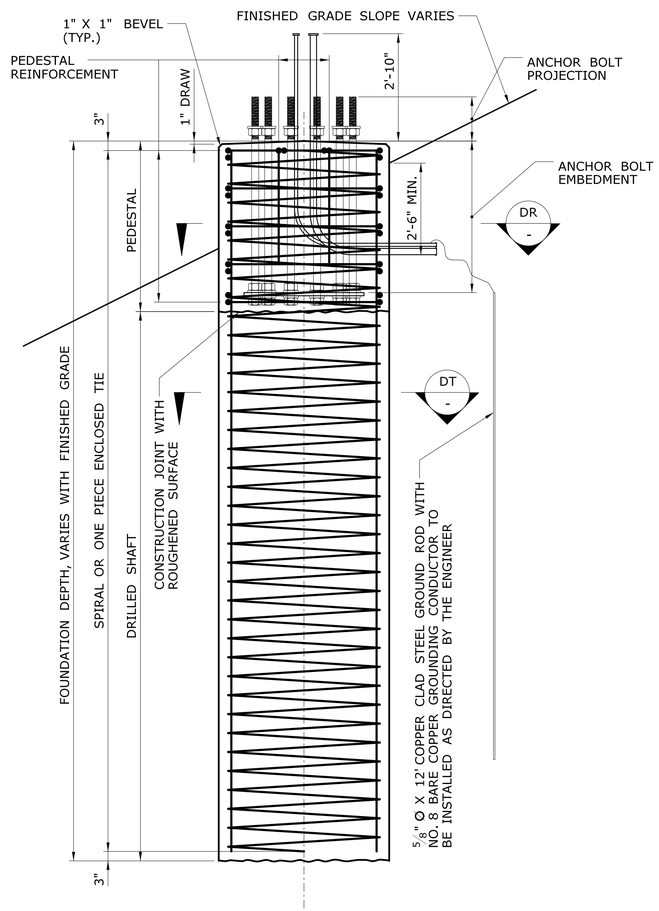

FOUNDATION IN EARTH

SCALE: 1/2" = 1'-0"

DS

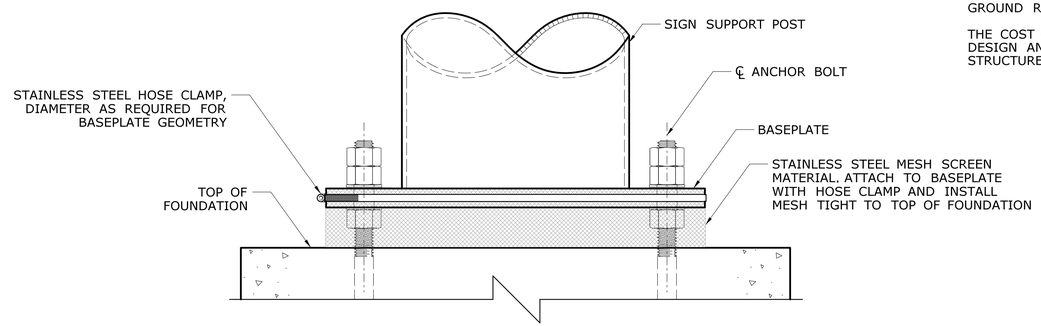

SCREEN AT BASEPLATE DETAIL

SCALE: 1 1/2" = 1'-0"

FOUNDATION NOTES

THE DRILLED SHAFT FOUNDATION SHALL BE DESIGNED, FABRICATED, AND CONSTRUCTED BY THE CONTRACTOR IN ACCORDANCE WITH THE SPECIAL PROVISION "DRILLED SHAFT TRAFFIC STRUCTURE FOUNDATION".

FOR THE DESIGN OF THE DRILLED SHAFT FOUNDATION, THE CONTRACTOR IS RESPONSIBLE TO DETERMINE THE SUBSURFACE CONDITIONS (CHARACTER OF THE SOIL AND ROCK, PRESENCE OF GROUND WATER, ETC.) IN THE LOCATION OF, ADJACENT TO AND BELOW THE SHAFT EXCAVATION. THE CONTRACTOR SHALL PERFORM A SUBSURFACE INVESTIGATION FOR EACH FOUNDATION LOCATION.

THE DESIGN OF THE FOUNDATION SHALL BE COORDINATED WITH THE SIGN STRUCTURE AND THE STRUCTURE ANCHORAGE TO ENSURE THAT THE FOUNDATION IS ADEQUATE FOR THE STRUCTURE REACTIONS AND TO AVOID CONFLICTS BETWEEN THE EMBEDDED STRUCTURE ANCHORAGE AND THE FOUNDATION REINFORCEMENT.

THE SIGN STRUCTURE SHALL NOT BE INSTALLED UNTIL BOTH THE PEDESTAL CONCRETE AND SHAFT CONCRETE HAVE ATTAINED A COMPRESSIVE STRENGTH, f'_c, GREATER THAN OR EQUAL TO 4,000 PSI BASED ON PHYSICAL TESTING.

ADDITIONAL RIGID METAL CONDUITS SHALL BE PROVIDED AS DIRECTED BY THE ENGINEER.

ALL EMPTY RIGID METAL CONDUITS SHALL BE CAPPED.

STAINLESS STEEL WIRE MESH SHALL BE INSTALLED TIGHT TO THE TOP OF THE FOUNDATIONS AND ATTACHED TO SIGN SUPPORT STRUCTURE BASEPLATES. THE MESH SHALL BE ATTACHED TO THE BASEPLATE WITH THE USE OF AN ADJUSTABLE STAINLESS STEEL HOSE CLAMP OF A DIAMETER THAT IS COMPATIBLE WITH THE GEOMETRY OF THE BASEPLATE.

THE RIGID METAL CONDUIT SWEEPS SHALL EXTEND A MINIMUM 2'-0" FROM THE SIDE OF THE FOUNDATION AND SHALL BE PLACED A MINIMUM OF 2'-6" BELOW FINISHED GRADE.

THE NO. 8 AWG BARE COPPER CONDUCTOR SHALL BE CONNECTED TO THE EXTERNAL GROUND ROD USING A GROUNDING CLAMP APPROVED FOR DIRECT BURIAL.

THE COST OF FOUNDATION EXCAVATION, REINFORCEMENT AND CONCRETE, INCLUDING THE DESIGN AND FABRICATION, SHALL BE PAID FOR UNDER THE ITEM "DRILLED SHAFT TRAFFIC STRUCTURE FOUNDATION".

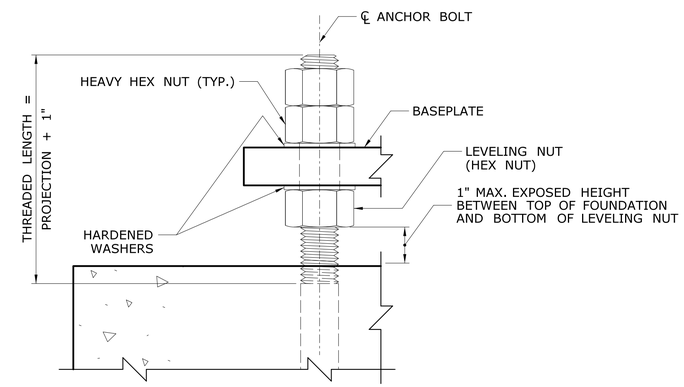

BASEPLATE CONNECTION DETAIL

SCALE: 3" = 1'-0"

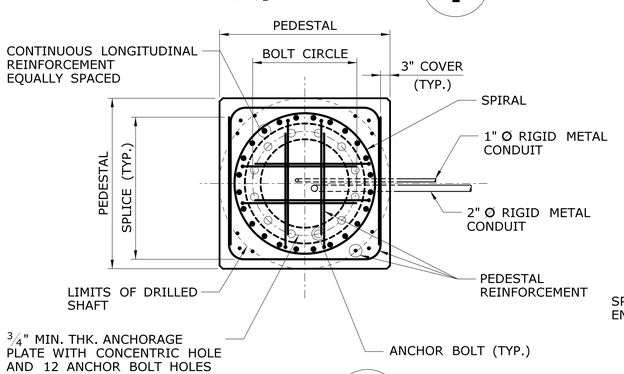

SECTION

SCALE: 1/2" = 1'-0"

DR

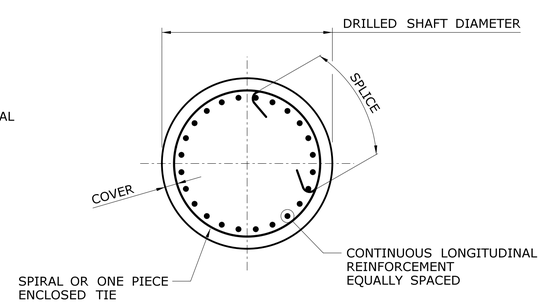

SECTION

SCALE: 1/2" = 1'-0"

DT

REV.	DATE	REVISION DESCRIPTION	SHEET NO.

THE INFORMATION, INCLUDING ESTIMATED QUANTITIES OF WORK, SHOWN ON THESE SHEETS IS BASED ON LIMITED INVESTIGATIONS BY THE STATE AND IS IN NO WAY WARRANTED TO INDICATE THE CONDITIONS OF ACTUAL QUANTITIES OF WORK WHICH WILL BE REQUIRED.

Plotted Date: 6/27/2018

DESIGNER/DRAFTER: NJM
CHECKED BY: BKC
SCALE AS NOTED

STATE OF CONNECTICUT
DEPARTMENT OF TRANSPORTATION

Filename: ..\170-3447_SB_DSF2_Fnd.dgn

SIGNATURE/BLOCK:
OFFICE OF ENGINEERING
APPROVED BY:

PROJECT TITLE:
STATEWIDE REPLACEMENT OF OVERHEAD SIGN SUPPORTS ON VARIOUS ROUTES

TOWN: VARIOUS

DRAWING TITLE:
DRILLED SHAFT TRAFFIC STRUCTURE FOUNDATION

PROJECT NO. 170-3447
DRAWING NO. DSF-02
SHEET NO. 01.06.02