## 01.09 - OVERHEAD TRUSS SIGN SUPPORT

# INDEX OF DRAWINGS

| DRAWING NUMBER | DRAWING TITLE | DRAWING NUMBER | DRAWING TITLE |
|---|---|---|---|
| OTS-01 | INDEX OF DRAWINGS | | |
| OTS-02 | 4 CHORD TRUSS BRIDGE SIGN STRUCTURE | | |
| OTS-03 | TRUSS BRIDGE SIGN STRUCTURE DETAILS - 1 | | |
| OTS-04 | TRUSS BRIDGE SIGN STRUCTURE DETAILS - 2 | | |
| OTS-05 | TRUSS BRIDGE SIGN STRUCTURE DETAILS - 3 | | |
| OTS-06 | OVERHEAD TRUSS SIGN SUPPORT FOUNDATION | | |

THE DESIGN APPEARS TO CONFORM TO APPLICABLE CRITERIA. APPROVAL IS NOT TO BE CONSTRUED TO MEAN THAT ALL ASPECTS OF THE DESIGN HAVE BEEN PERSONALLY CHECKED BY THE UNDERSIGNED.

Mary E. Baker, P.E.
2018.07.16
08:33:21-04'00'

TRANSPORTATION PRINCIPAL ENGINEER

| REV. | DATE | REVISION DESCRIPTION | SHEET NO. |
|---|---|---|---|

THE INFORMATION, INCLUDING ESTIMATED QUANTITIES OF WORK, SHOWN ON THESE SHEETS IS BASED ON LIMITED INVESTIGATIONS BY THE STATE AND IS IN NO WAY WARRANTED TO INDICATE THE CONDITIONS OF ACTUAL QUANTITIES OF WORK WHICH WILL BE REQUIRED.

Plotted Date: 7/12/2018

DESIGNER/DRAFTER: NJM

CHECKED BY: BKC

STATE OF CONNECTICUT
DEPARTMENT OF TRANSPORTATION

Filename: ...\170-3447_SB_QCT_Subset_Cover_Sheet.dgn

SIGNATURE/ BLOCK:
OFFICE OF ENGINEERING

APPROVED BY:

PROJECT TITLE:
STATEWIDE REPLACEMENT OF OVERHEAD SIGN SUPPORTS ON VARIOUS ROUTES

TOWN: VARIOUS

DRAWING TITLE: INDEX OF DRAWINGS

PROJECT NO. 170-3447

DRAWING NO. OTS-01

SHEET NO. 01.09.01

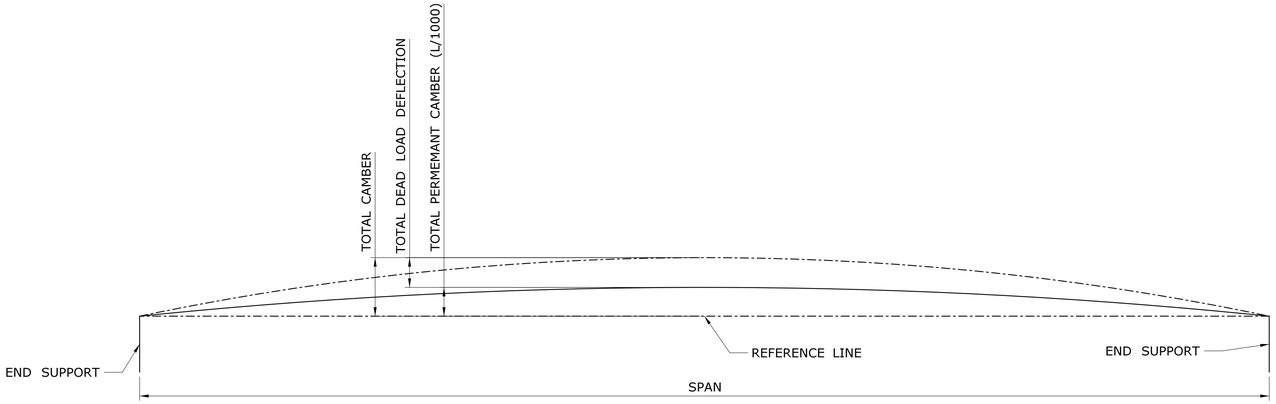


## CAMBER DIAGRAM

SCALE: NTS

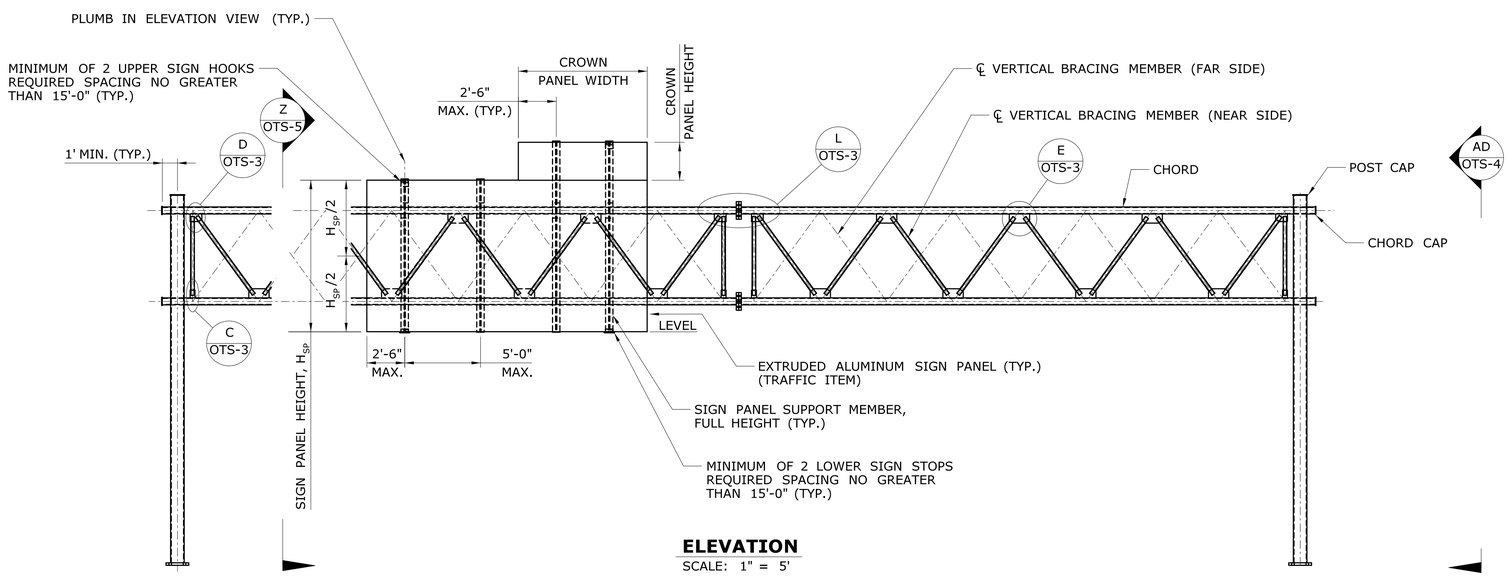


## ELEVATION

SCALE: 1" = 5'

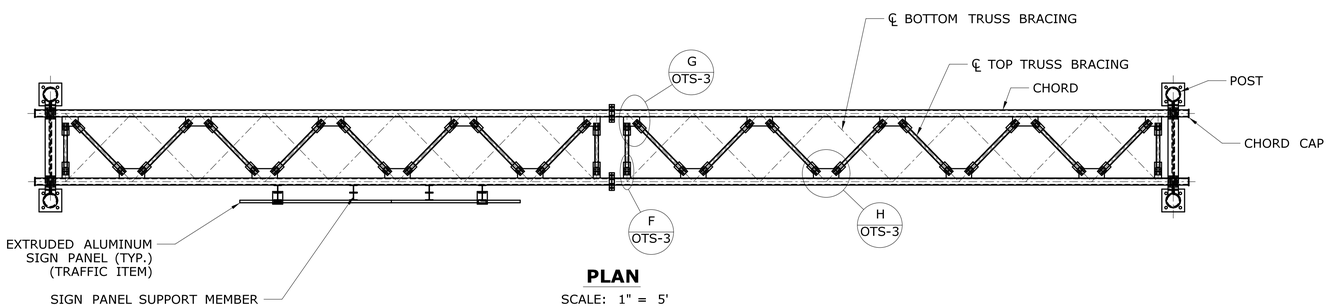


## PLAN

SCALE: 1" = 5'

## NOTES

THE 4 CHORD TRUSS BRIDGE SIGN STRUCTURE, INCLUDING THE ANCHORAGE TO THE FOUNDATIONS AND THE HARDWARE AND STRUCTURAL MEMBERS REQUIRED TO SUPPORT THE TRAFFIC APPURTENANCES, SHALL BE DESIGNED, FABRICATED, ERECTED, ASSEMBLED AND INSTALLED BY THE CONTRACTOR IN ACCORDANCE WITH THE SPECIAL PROVISION "4 CHORD TRUSS BRIDGE SIGN STRUCTURE".

THE 4 CHORD TRUSS BRIDGE SIGN STRUCTURE SHALL BE COMPOSED OF A 4 CHORD TRUSS HORIZONTAL OVERHEAD SPAN MEMBER SUPPORTED ON A TOWER ASSEMBLY MADE UP OF 2 POSTS WITH BRACING MEMBERS.

THE DETAILS PRESENTED AND REFERRED TO ON THIS SHEET REPRESENT CONCEPTUAL DETAILS OF A SIGN STRUCTURE CONSISTENT WITH THE REQUIREMENTS IN THE SPECIFICATIONS. THE CONTRACTOR IS RESPONSIBLE FOR DETERMINING ALL DETAILS AND DIMENSIONS.

THE APPROXIMATE DIMENSIONS OF THE HORIZONTAL TRUSS AND THE TOWER HEIGHTS ARE SHOWN IN PLAN AND ELEVATION ON THE TRAFFIC SHEETS. THE ACTUAL SIGN STRUCTURE DIMENSIONS SHALL BE DETERMINED BY THE CONTRACTOR BASED ON A THE HORIZONTAL AND VERTICAL CLEARANCES SHOWN ON THE TRAFFIC SHEETS, A FIELD SURVEY OF THE FINISHED GRADE AT THE SITE, THE ELEVATION OF THE TOP OF THE FINISHED FOUNDATION, THE LOCATIONS OF OVERHEAD AND SUBSURFACE UTILITIES, THE LOCATION OF THE DRAINAGE FACILITIES AND NOISE BARRIER WALL LOCATIONS.

THE SIGN PANELS, INCLUDING CROWN PANELS AS APPLICABLE, SHALL BE LOCATED ON THE HORIZONTAL TRUSS BASED ON THE DIMENSIONS SHOWN ON THE TRAFFIC SHEETS AND THE ACTUAL SIGN STRUCTURE DIMENSIONS. THE SIGN PANELS SHALL BE INSTALLED SYMMETRICALLY ABOUT THE CENTERLINE OF THE TRUSS. THE NUMBER AND SPACING OF PANEL SUPPORT MEMBERS SHALL BE DETERMINED BY THE CONTRACTOR BASED ON THE WIDTH OF THE SIGN AND CROWN PANELS AND THE SUPPORT MEMBER SPACING PARAMETERS. SIGN PANELS SHALL BE SUPPORTED BY NO LESS THAN 3 SUPPORT MEMBERS. CROWN PANELS SHALL BE SUPPORTED BY NO LESS THAN 2 SUPPORT MEMBERS.

THE CONTRACTOR SHALL BE RESPONSIBLE FOR THE PROPER FIT OF THE SIGN STRUCTURES ON THE CONSTRUCTED FOUNDATIONS. PRIOR TO FABRICATION, THE CONTRACTOR SHALL TAKE FIELD MEASUREMENTS TO VERIFY ALL SIGN STRUCTURE DIMENSIONS DEPENDANT UPON THE CONSTRUCTED FOUNDATIONS. THE OVERHEAD MEMBER SHALL BE TEMPORARILY SUPPORTED, IN ORDER TO BRING ALL PLATES OF THE CONNECTIONS INTO FIRM CONTACT, WHILE THE HIGH STRENGTH BOLTS ARE INSTALLED AND TENSIONED. THE CONTRACTOR SHALL TAKE THE PROPER PRECAUTIONS TO ENSURE THE STABILITY OF ALL STRUCTURAL ELEMENTS UNTIL THE TOTAL STRUCTURE IS ERECTED.

THE COST OF THE TUBULAR STEEL MEMBERS, STRUCTURAL STEEL ROLLED SHAPES, PLATES AND BARS, HIGH-STRENGTH BOLTS AND ANCHORAGE MATERIALS, INCLUDING THE DESIGN, FABRICATION, COATING AND ERECTION, SHALL BE PAID FOR UNDER THE ITEM "4 CHORD TRUSS BRIDGE SIGN STRUCTURE". THE COST OF FOUNDATION EXCAVATION, REINFORCEMENT AND CONCRETE, INCLUDING THE DESIGN AND FABRICATION, SHALL BE PAID FOR UNDER THE ITEM "OVERHEAD TRUSS SIGN SUPPORT FOUNDATION".

| REV. | DATE | REVISION DESCRIPTION | SHEET NO. |
|---|---|---|---|

THE INFORMATION, INCLUDING ESTIMATED QUANTITIES OF WORK, SHOWN ON THESE SHEETS IS BASED ON LIMITED INVESTIGATIONS BY THE STATE AND IS IN NO WAY WARRANTED TO INDICATE THE CONDITIONS OF ACTUAL QUANTITIES OF WORK WHICH WILL BE REQUIRED.

Plotted Date: 7/12/2018

DESIGNER/DRAFTER: NJM
CHECKED BY: BKC
SCALE AS NOTED

STATE OF CONNECTICUT
DEPARTMENT OF TRANSPORTATION

Filename: ...\170-3447_SB_QCT-General_Plan.dgn

SIGNATURE/BLOCK: OFFICE OF ENGINEERING
APPROVED BY:

PROJECT TITLE: STATEWIDE REPLACEMENT OF OVERHEAD SIGN SUPPORTS ON VARIOUS ROUTES

TOWN: VARIOUS

DRAWING TITLE: 4 CHORD TRUSS BRIDGE SIGN STRUCTURE

PROJECT NO. 170-3447
DRAWING NO. OTS-02
SHEET NO. 01.09.02

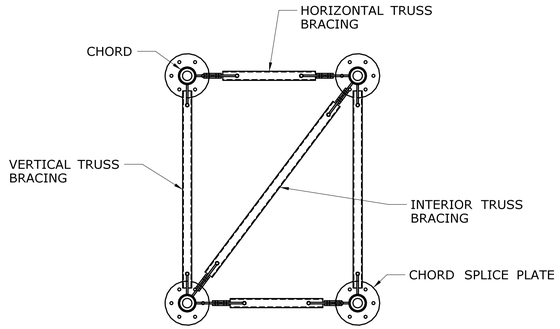


**SECTION- TRUSS BOX CONNECTION** (A / -)

SCALE: 1½" = 1'-0"

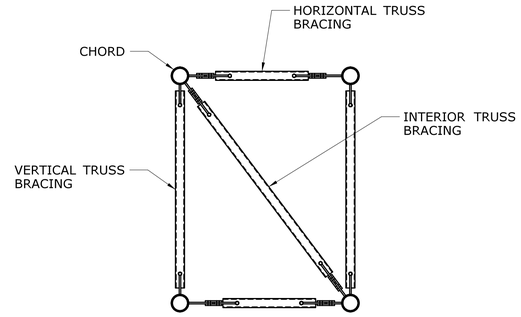


**VIEW END BOX TRUSS** (B / -)

SCALE: 1½" = 1'-0"

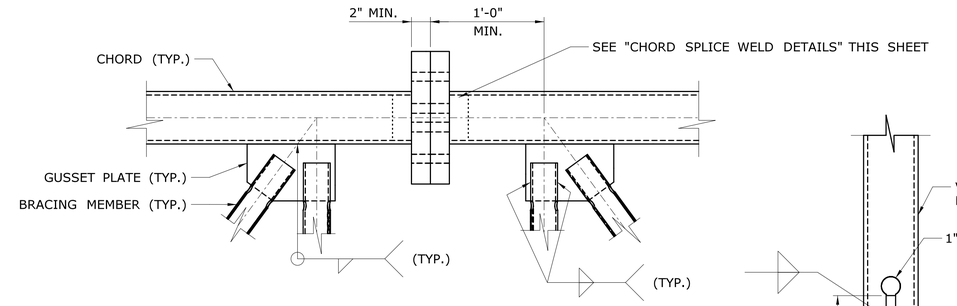


**DETAIL** (L / -)

SCALE: 1½" = 1'-0"

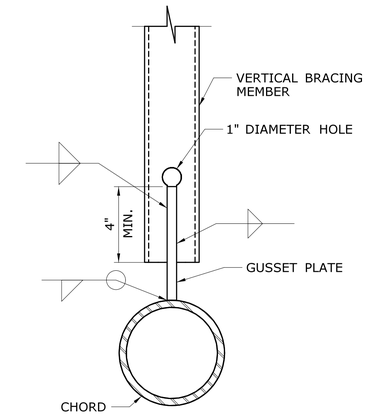


**SECTION** (J / -)

SCALE: 1½" = 1'-0"

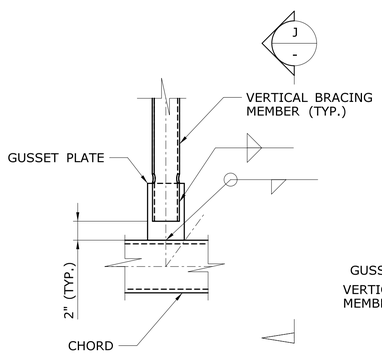


**DETAIL** (C / -)

SCALE: 1½" = 1'-0"

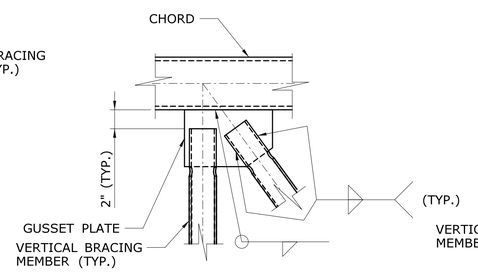


**DETAIL** (D / -)

SCALE: 1½" = 1'-0"

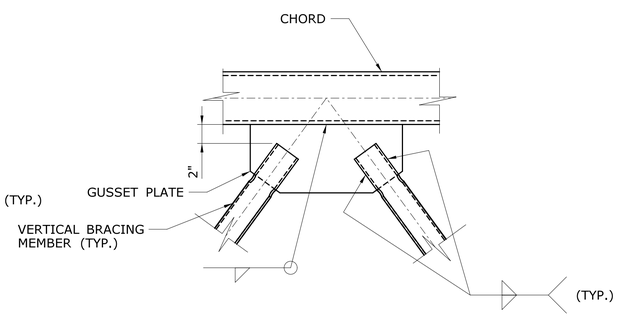


**DETAIL** (E / -)

SCALE: 1½" = 1'-0"

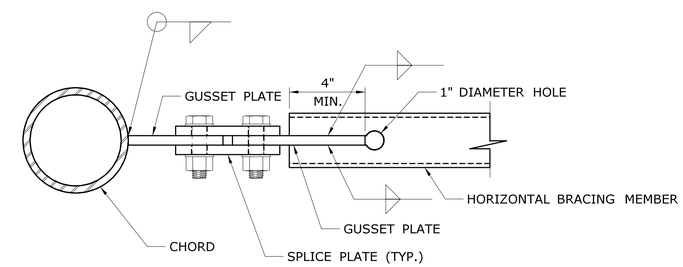


**SECTION** (K / -)

SCALE: 1½" = 1'-0"

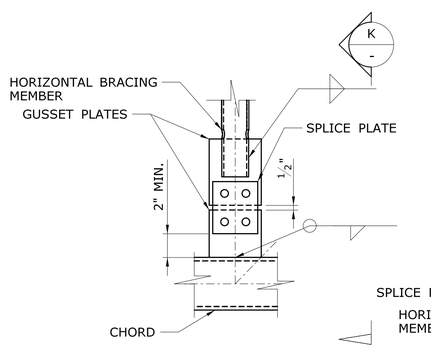


**DETAIL** (F / -)

SCALE: 1½" = 1'-0"

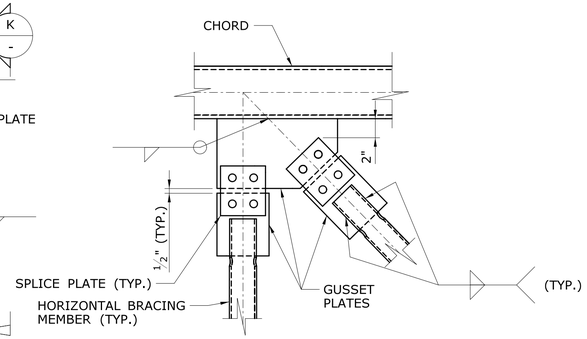


**DETAIL** (G / -)

SCALE: 1½" = 1'-0"

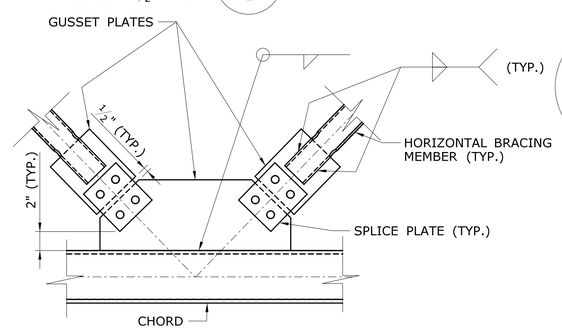


**DETAIL** (H / -)

SCALE: 1½" = 1'-0"

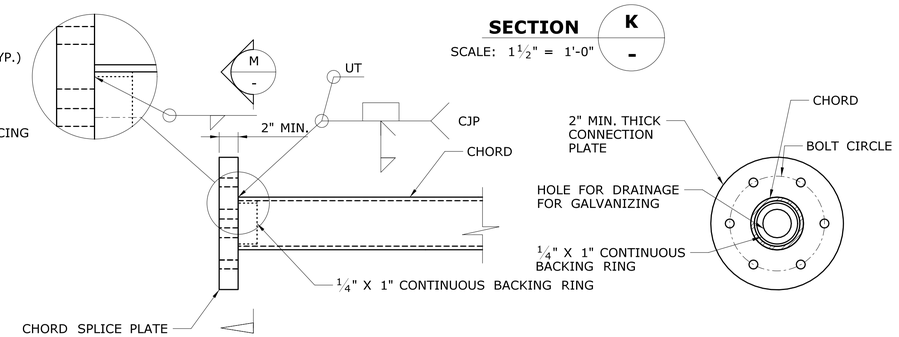


**CHORD SPLICE WELD DETAILS**

SCALE: 1½" = 1'-0"

**SECTION** (M / -)

SCALE: 1½" = 1'-0"

| REV. | DATE | REVISION DESCRIPTION | SHEET NO. |
|---|---|---|---|

THE INFORMATION, INCLUDING ESTIMATED QUANTITIES OF WORK, SHOWN ON THESE SHEETS IS BASED ON LIMITED INVESTIGATIONS BY THE STATE AND IS IN NO WAY WARRANTED TO INDICATE THE CONDITIONS OF ACTUAL QUANTITIES OF WORK WHICH WILL BE REQUIRED.

Plotted Date: 7/12/2018

DESIGNER/DRAFTER: NJM

CHECKED BY: BKC

SCALE AS NOTED

STATE OF CONNECTICUT
DEPARTMENT OF TRANSPORTATION

Filename: ..\170-3447_SB_QCT-Details_1.dgn

SIGNATURE/BLOCK:
OFFICE OF ENGINEERING
APPROVED BY:

PROJECT TITLE:
STATEWIDE REPLACEMENT OF OVERHEAD SIGN SUPPORTS ON VARIOUS ROUTES

TOWN: VARIOUS

DRAWING TITLE:
TRUSS BRIDGE SIGN STRUCTURE DETAILS - 1

PROJECT NO. 170-3447

DRAWING NO. OTS-03

SHEET NO. 01.09.03

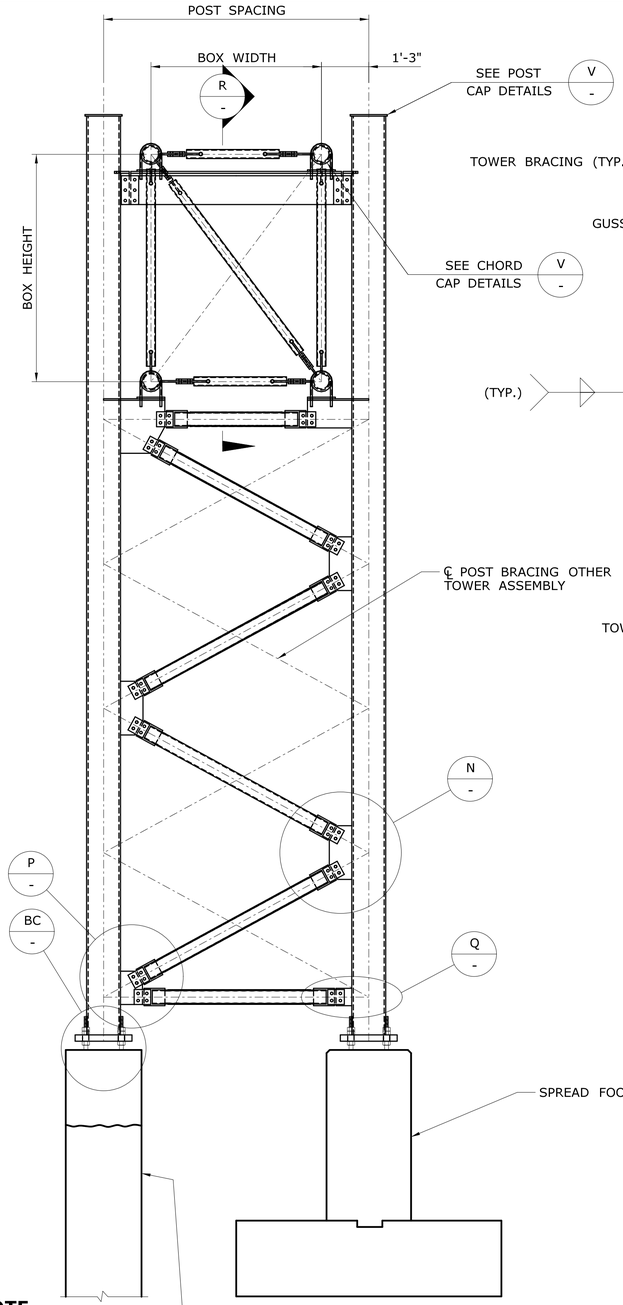


***NOTE**

FOR SITE NO. 9 SEE SUBSET NO. 01.12 FOR FOUNDATION DETAILS

**VIEW - TOWER ASSEMBLY** (AD / -)

SCALE: 1/2" = 1'-0"

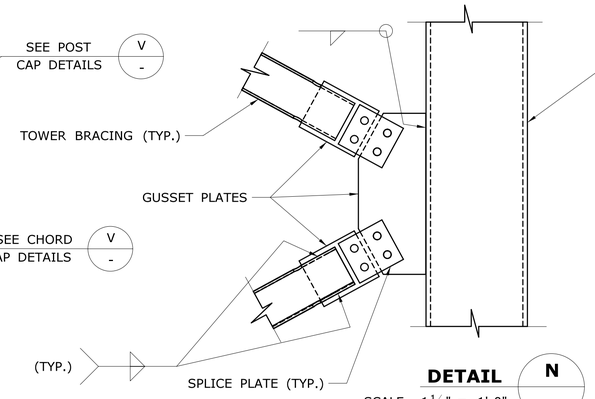


**DETAIL** (N / -)

SCALE: 1 1/2" = 1'-0"

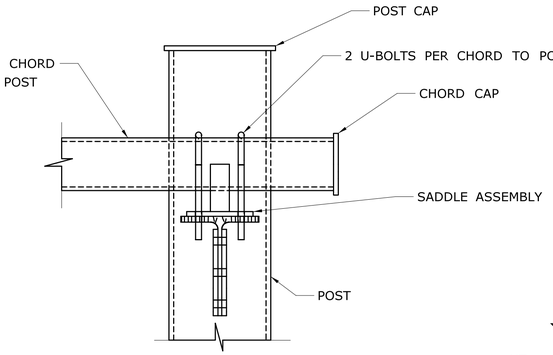


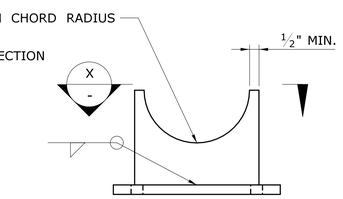


**SADDLE ASSEMBLY**

SCALE: 3" = 1'-0"

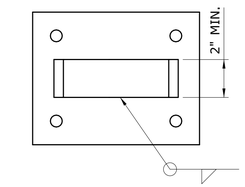


**VIEW** (X / -)

SCALE: 3" = 1'-0"

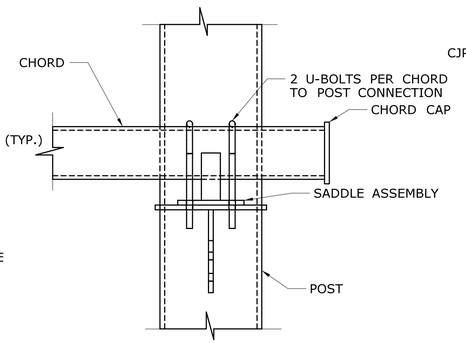


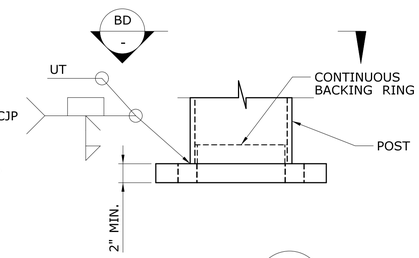


**DETAIL** (BC / -)

SCALE: 1 1/2" = 1'-0"

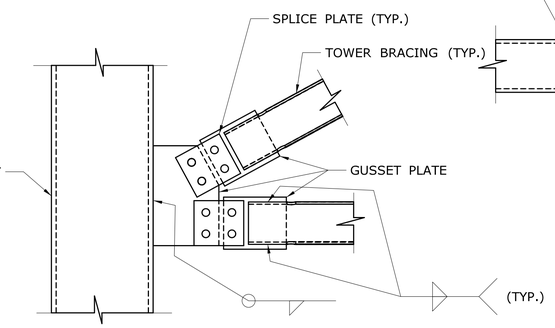


**DETAIL** (P / -)

SCALE: 1 1/2" = 1'-0"

**DETAIL** (R / -)

SCALE: 1 1/2" = 1'-0"

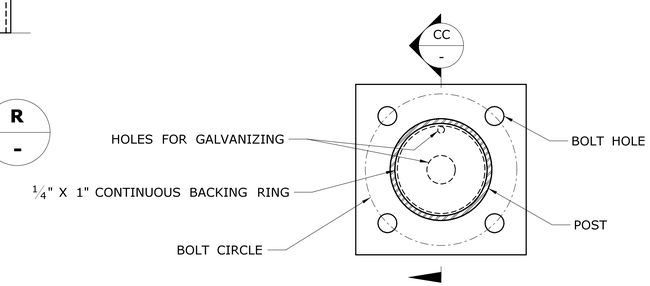


**SECTION** (BD / -)

SCALE: 1 1/2" = 1'-0"

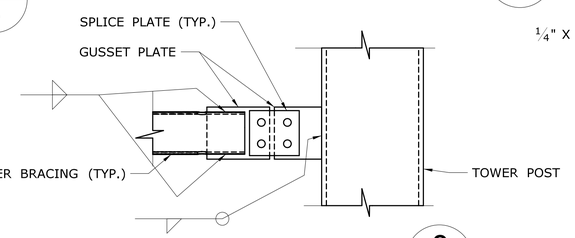


**DETAIL** (Q / -)

SCALE: 1 1/2" = 1'-0"

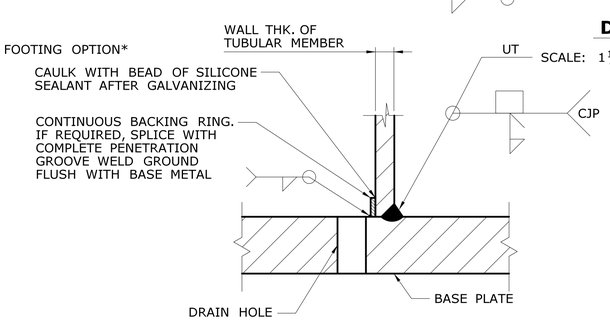


**SECTION** (CC / -)

SCALE: NTS

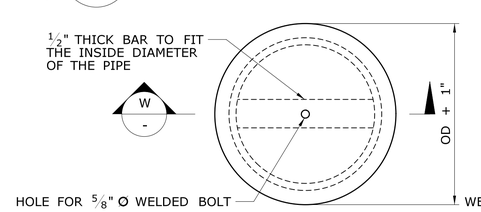


**CHORD AND POST CAP DETAILS** (V / -)

SCALE: NTS

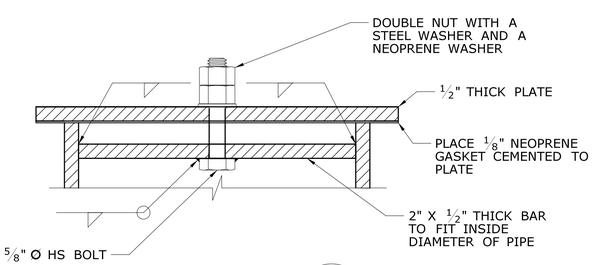


**CAP SECTION** (W / -)

SCALE: NTS

| REV. | DATE | REVISION DESCRIPTION | SHEET NO. |
|---|---|---|---|

THE INFORMATION, INCLUDING ESTIMATED QUANTITIES OF WORK, SHOWN ON THESE SHEETS IS BASED ON LIMITED INVESTIGATIONS BY THE STATE AND IS IN NO WAY WARRANTED TO INDICATE THE CONDITIONS OF ACTUAL QUANTITIES OF WORK WHICH WILL BE REQUIRED.

Plotted Date: 7/12/2018

DESIGNER/DRAFTER: NJM

CHECKED BY: BKC

SCALE AS NOTED

STATE OF CONNECTICUT
DEPARTMENT OF TRANSPORTATION

Filename: ...\170-3447_SB_QCT-Details_2.dgn

SIGNATURE/BLOCK: OFFICE OF ENGINEERING

APPROVED BY: Mary E. Bak

PROJECT TITLE: STATEWIDE REPLACEMENT OF OVERHEAD SIGN SUPPORTS ON VARIOUS ROUTES

TOWN: VARIOUS

DRAWING TITLE: TRUSS BRIDGE SIGN STRUCTURE DETAILS - 2

PROJECT NO. 170-3447

DRAWING NO. OTS-04

SHEET NO. 01.09.04

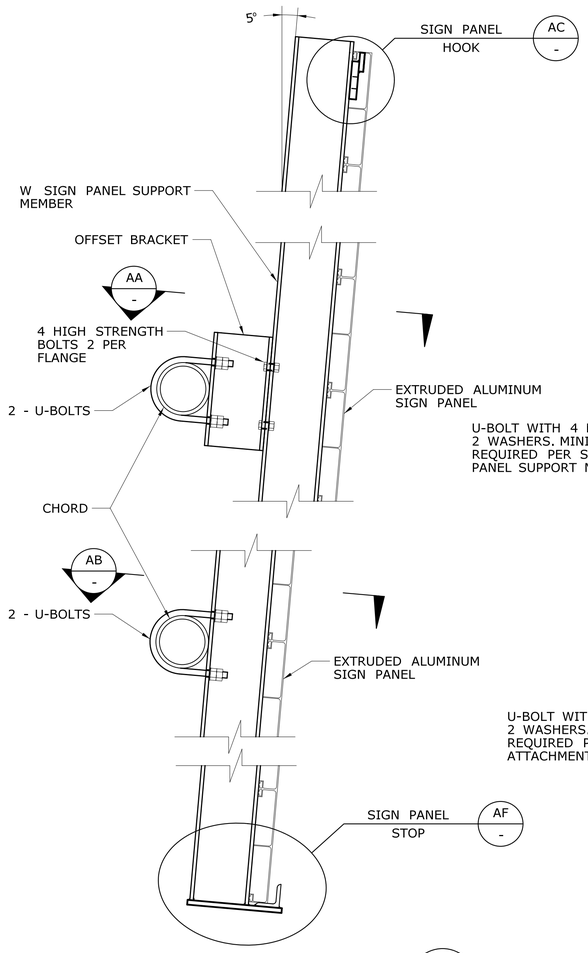


**VERTICAL ATTACHMENT DETAIL** Z -

SCALE: 1½" = 1'-0"

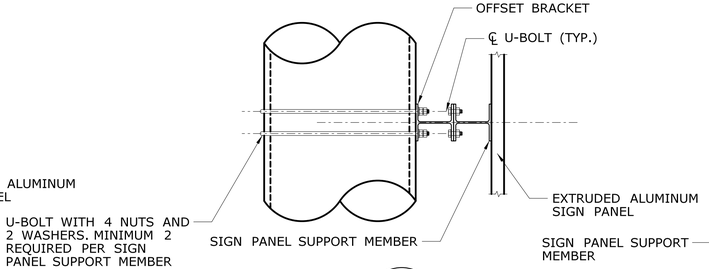


**SECTION** AA -

SCALE: 1" = 1'-0"

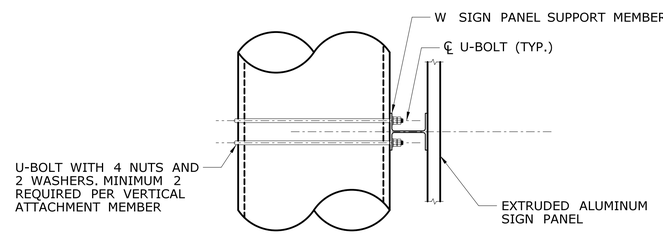


**SECTION** AB -

SCALE: 1" = 1'-0"

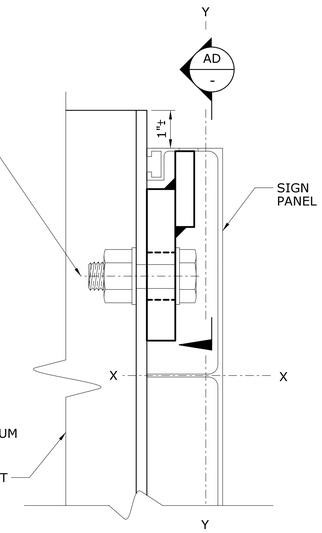


**DETAIL** AC -

SCALE: 6" = 1'-0"

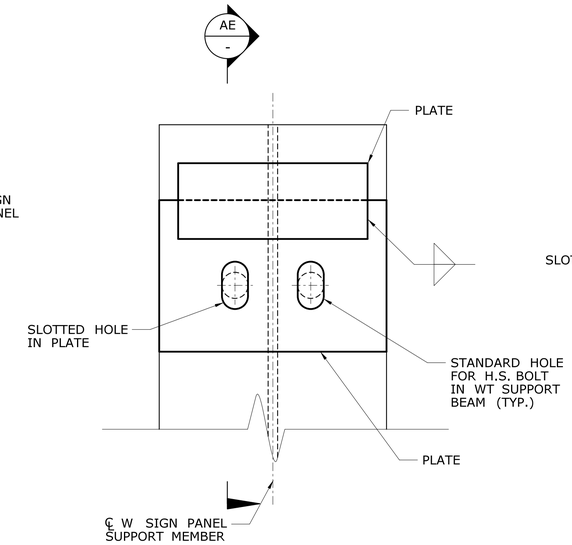


**SECTION** AD -

SCALE: 6" = 1'-0"

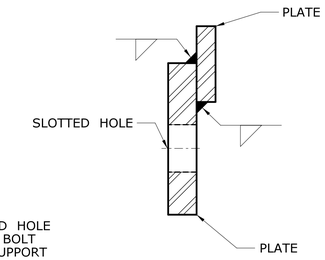


**SECTION** AE -

SCALE: 6" = 1'-0"

**TYPICAL SIGN HOOK DETAILS**

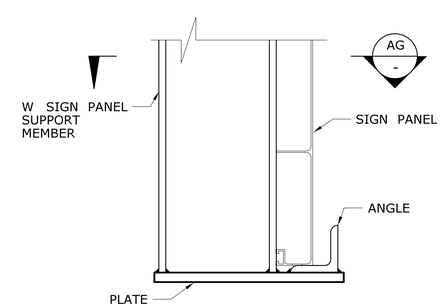


**DETAIL** AF -

SCALE: 3" = 1'-0"

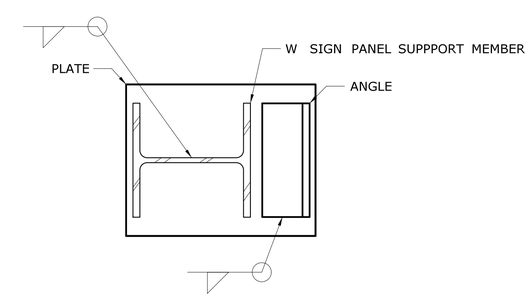


**DETAIL** AG -

SCALE: 3" = 1'-0"

**TYPICAL SIGN STOP DETAILS**

| REV. | DATE | REVISION DESCRIPTION | SHEET NO. |
|---|---|---|---|

THE INFORMATION, INCLUDING ESTIMATED QUANTITIES OF WORK, SHOWN ON THESE SHEETS IS BASED ON LIMITED INVESTIGATIONS BY THE STATE AND IS IN NO WAY WARRANTED TO INDICATE THE CONDITIONS OF ACTUAL QUANTITIES OF WORK WHICH WILL BE REQUIRED.

Plotted Date: 7/12/2018

DESIGNER/DRAFTER: NJM

CHECKED BY: BKC

SCALE AS NOTED

STATE OF CONNECTICUT
DEPARTMENT OF TRANSPORTATION

Filename: ...\170-3447_SB_QCT-Details_3.dgn

SIGNATURE/BLOCK: OFFICE OF ENGINEERING

APPROVED BY: Mary E. Baker

PROJECT TITLE: STATEWIDE REPLACEMENT OF OVERHEAD SIGN SUPPORTS ON VARIOUS ROUTES

TOWN: VARIOUS

DRAWING TITLE: TRUSS BRIDGE SIGN STRUCTURE DETAILS - 3

PROJECT NO. 170-3447

DRAWING NO. OTS-05

SHEET NO. 01.09.05

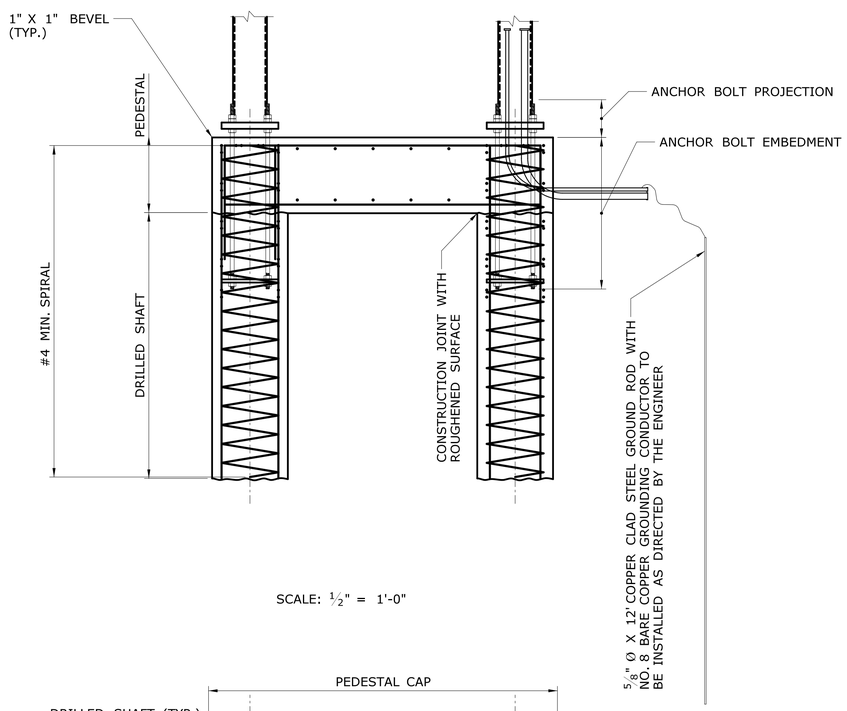


SCALE: 1/2" = 1'-0"

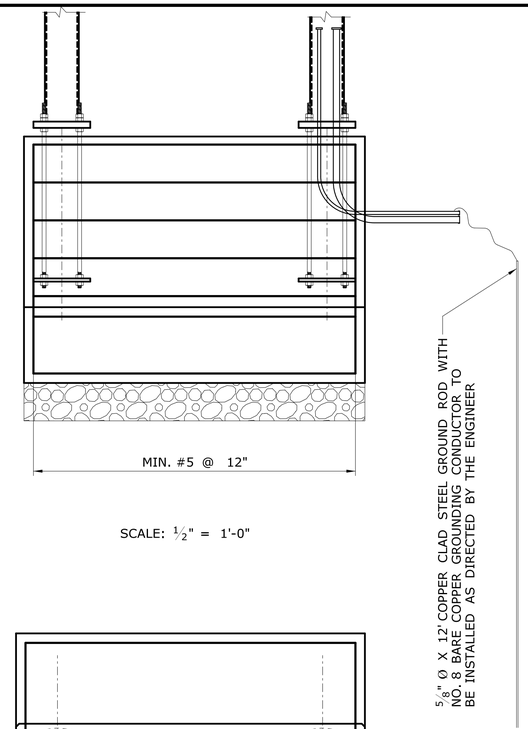


SCALE: 1/2" = 1'-0"

## FOUNDATION NOTES

THE FOUNDATION FOR THE OVERHEAD TRUSS SIGN SUPPORT SHALL BE DESIGNED, FABRICATED, AND CONSTRUCTED BY THE CONTRACTOR IN ACCORDANCE WITH THE SPECIAL PROVISION "OVERHEAD TRUSS SIGN SUPPORT FOUNDATION". UNDER THIS ITEM THE CONTRACTOR HAS THE OPTION OF CONSTRUCTING A SPREAD FOOTING OR A DRILLED SHAFT AS THE FOUNDATION UNIT. THIS SHEET IS NOT APPLICABLE TO SITE NO. 9 (EAST HARTFORD). FOR SITE NO. 9 (EAST HARTFORD) ONLY, THE "OVERHEAD TRUSS SIGN SUPPORT FOUNDATION" SHALL BE CONSTRUCTED IN ACCORDANCE WITH SUBSET NO. 01.12.

FOR THE DESIGN OF THE SPREAD FOOTING OR DRILLED SHAFT FOUNDATIONS, THE CONTRACTOR IS RESPONSIBLE FOR DETERMINING THE SUBSURFACE CONDITIONS (CHARACTER OF THE SOIL AND ROCK, PRESENCE OF GROUND WATER, ETC.) IN THE LOCATION OF, ADJACENT TO AND BELOW THE FOUNDATIONS. THE CONTRACTOR SHALL PERFORM A SUBSURFACE INVESTIGATION FOR EACH FOUNDATION LOCATION.

THE DESIGN OF THE FOUNDATION SHALL BE COORDINATED WITH THE SIGN SUPPORT AND THE SUPPORT ANCHORAGE TO ENSURE THAT THE FOUNDATION IS ADEQUATE FOR THE SUPPORT REACTIONS AND TO AVOID CONFLICTS BETWEEN THE EMBEDDED SUPPORT ANCHORAGE AND THE FOUNDATION REINFORCEMENT.

THE SIGN SUPPORT SHALL NOT BE INSTALLED UNTIL ALL CONCRETE HAS ATTAINED A COMPRESSIVE STRENGTH, $f'_c$, GREATER THAN OR EQUAL TO 4,000 PSI BASED ON PHYSICAL TESTING.

ADDITIONAL RIGID METAL CONDUITS SHALL BE PROVIDED AS DIRECTED BY THE ENGINEER.

ALL EMPTY RIGID METAL CONDUITS SHALL BE CAPPED.

STAINLESS STEEL WIRE MESH SHALL BE INSTALLED TIGHT TO THE TOP OF THE FOUNDATIONS AND ATTACHED TO SIGN SUPPORT STRUCTURE BASEPLATES. THE MESH SHALL BE ATTACHED TO THE BASEPLATE WITH THE USE OF AN ADJUSTABLE STAINLESS STEEL HOSE CLAMP OF A DIAMETER THAT IS COMPATIBLE WITH THE GEOMETRY OF THE BASEPLATE.

THE RIGID METAL CONDUIT SWEEPS SHALL EXTEND A MINIMUM 2'-0" FROM THE SIDE OF THE FOUNDATION AND SHALL BE PLACED A MINIMUM OF 2'-6" BELOW FINISHED GRADE.

THE NO. 8 AWG BARE COPPER CONDUCTOR SHALL BE CONNECTED TO THE EXTERNAL GROUND ROD USING A GROUNDING CLAMP APPROVED FOR DIRECT BURIAL.

THE COST OF FOUNDATION EXCAVATION, REINFORCEMENT AND CONCRETE, INCLUDING THE DESIGN AND FABRICATION, AND INCIDENTAL CONSTRUCTION SHALL BE PAID FOR UNDER THE ITEM "OVERHEAD TRUSS SIGN SUPPORT FOUNDATION".

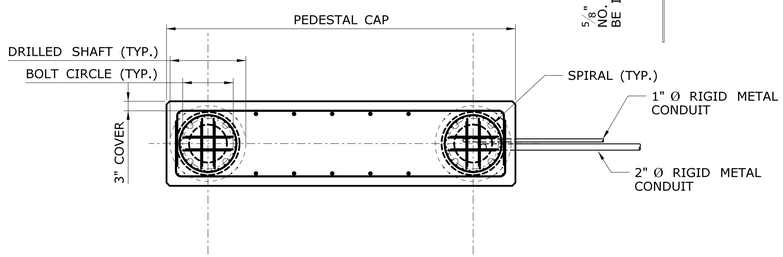


SCALE: 1/2" = 1'-0"

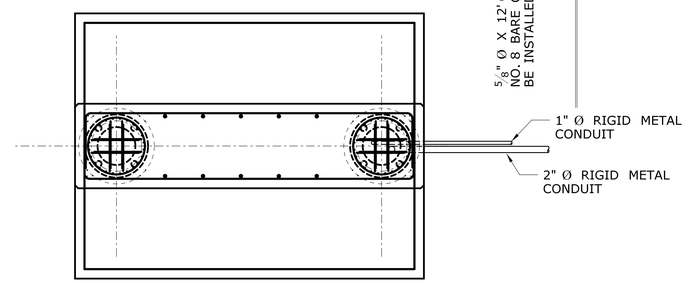

SCALE: 1/2" = 1'-0"

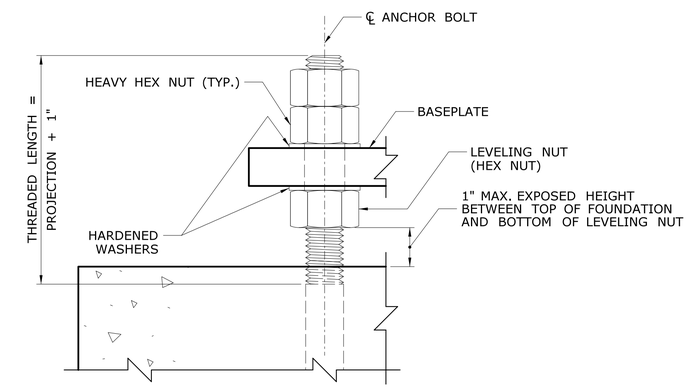


**BASEPLATE CONNECTION DETAIL**

SCALE: 3" = 1'-0"

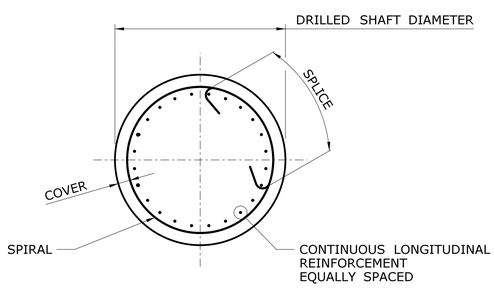


SCALE: 1/2" = 1'-0"

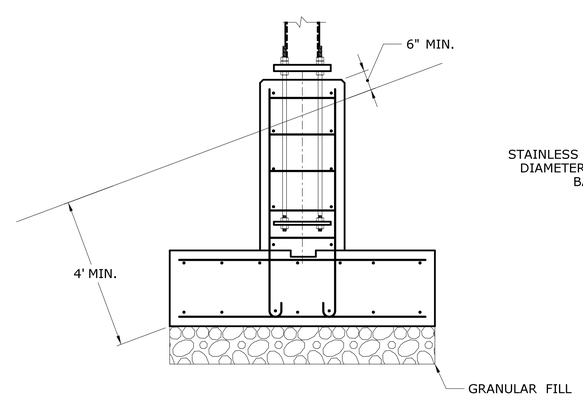


SCALE: 1/2" = 1'-0"

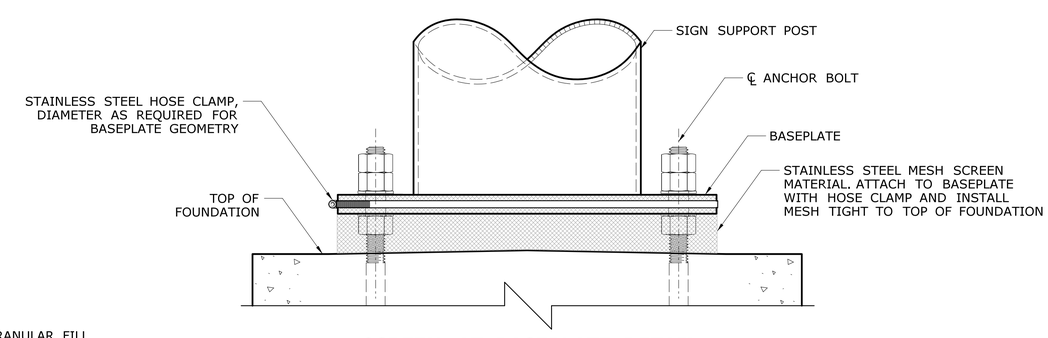


**SCREEN AT BASEPLATE DETAIL**

SCALE: 1 1/2" = 1'-0"

| REV. | DATE | REVISION DESCRIPTION | SHEET NO. |
|---|---|---|---|

THE INFORMATION, INCLUDING ESTIMATED QUANTITIES OF WORK, SHOWN ON THESE SHEETS IS BASED ON LIMITED INVESTIGATIONS BY THE STATE AND IS IN NO WAY WARRANTED TO INDICATE THE CONDITIONS OF ACTUAL QUANTITIES OF WORK WHICH WILL BE REQUIRED.

Plotted Date: 7/12/2018

DESIGNER/DRAFTER: NJM

CHECKED BY: BKC

SCALE AS NOTED

STATE OF CONNECTICUT
DEPARTMENT OF TRANSPORTATION

Filename: ...\170-3447_SB_Bridge_Truss_Foundation-1_Fnd.dgn

SIGNATURE/BLOCK: OFFICE OF ENGINEERING

APPROVED BY: Mary E. Baker

PROJECT TITLE: STATEWIDE REPLACEMENT OF OVERHEAD SIGN SUPPORTS ON VARIOUS ROUTES

TOWN: VARIOUS

DRAWING TITLE: OVERHEAD TRUSS SIGN SUPPORT FOUNDATION

PROJECT NO. 170-3447

DRAWING NO. OTS-06

SHEET NO. 01.09.06