01.07 - BREAKAWAY SIGN SUPPORT

INDEX OF DRAWINGS

DRAWING NUMBER	DRAWING TITLE	DRAWING NUMBER	DRAWING TITLE
BSM-01	INDEX OF DRAWINGS		
BSM-02	GENERAL NOTES		
BSM-03	POST SELECTION TABLE 1 (W ≤ 15 FT.)		
BSM-04	POST SELECTION TABLE 2 (W > 15 FT.)		
BSM-05	FOUNDATION DETAILS		
BSM-06	BRACKET DETAILS		
BSM-07	HINGE DETAILS		

THE DESIGN APPEARS TO CONFORM TO APPLICABLE CRITERIA. APPROVAL IS NOT TO BE CONSTRUED TO MEAN THAT ALL ASPECTS OF THE DESIGN HAVE BEEN PERSONALLY CHECKED BY THE UNDERSIGNED.

Bryan H. Reed, P.E.

Digitally signed by Bryan H. Reed, P.E.
Date: 2018.06.28 13:06:50-04'00'

TRANSPORTATION PRINCIPAL ENGINEER

REV.	DATE	REVISION DESCRIPTION	SHEET NO.

THE INFORMATION, INCLUDING ESTIMATED QUANTITIES OF WORK, SHOWN ON THESE SHEETS IS BASED ON LIMITED INVESTIGATIONS BY THE STATE AND IS IN NO WAY WARRANTED TO INDICATE THE CONDITIONS OF ACTUAL QUANTITIES OF WORK WHICH WILL BE REQUIRED.

Plotted Date: 6/19/2018

DESIGNER/DRAFTER: NJM

CHECKED BY: BKC

STATE OF CONNECTICUT
DEPARTMENT OF TRANSPORTATION

Filename: ...\170-3447_SB_Breakaway_Signpost_BSM1_Drawing_Index.dgn

SIGNATURE/ BLOCK:

OFFICE OF ENGINEERING

APPROVED BY:

PROJECT TITLE:

STATEWIDE REPLACEMENT OF OVERHEAD SIGN SUPPORTS ON VARIOUS ROUTES

TOWN: VARIOUS

DRAWING TITLE: INDEX OF DRAWINGS

PROJECT NO. 170-3447

DRAWING NO. BSM-01

SHEET NO. 01.07.01

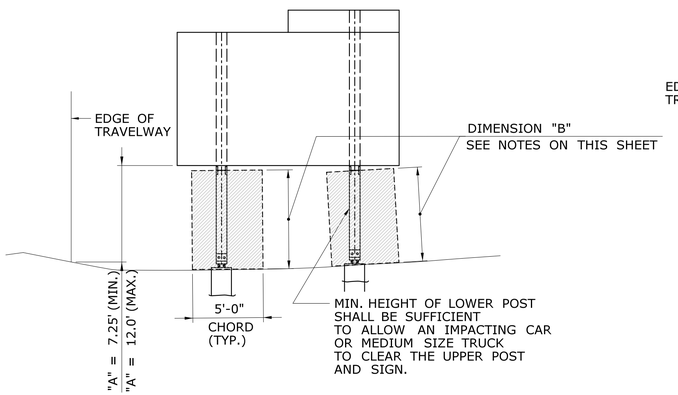

LEVEL TO SHALLOW SLOPES

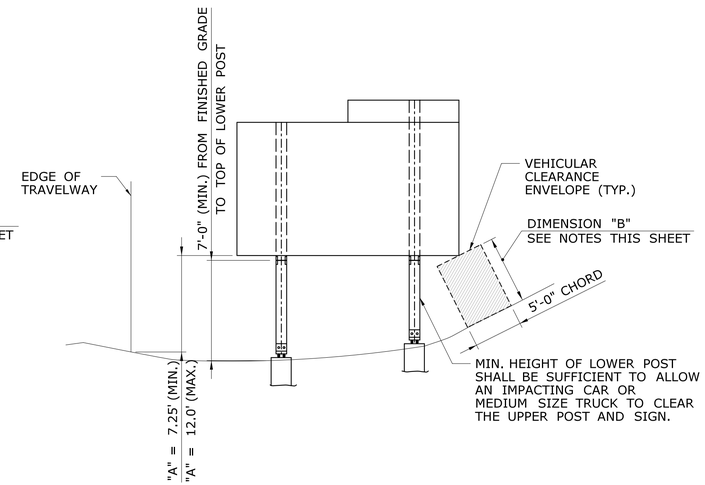

STEEPER SLOPES

SIGN LOCATION - CUT

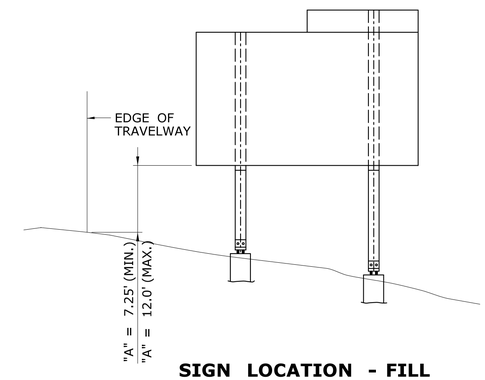

SIGN LOCATION - FILL

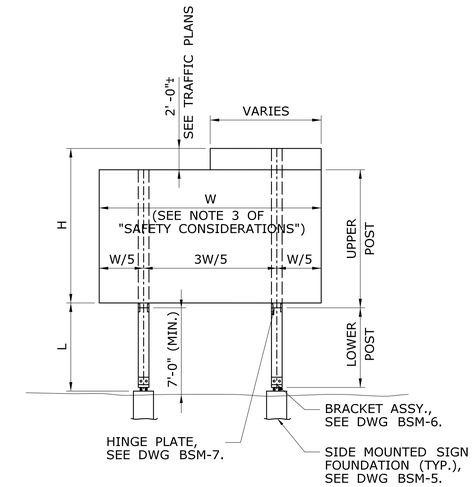

TYPICAL POST MOUNTED SIGN

NOTES FOR DETERMINING DIMENSION "B"

1. DIMENSION "B" IS THE SMALLER OF:
   A. THE CLEAR DISTANCE BETWEEN THE BOTTOM OF SIGN AND THE FINISHED GRADE.
   B. THE CLEAR DISTANCE BETWEEN THE BOTTOM OF UPPER POST AND THE FINISHED GRADE.
2. DIMENSION "B" SHALL TYPICALLY BE A MINIMUM OF 7'-0" TO CLEAR AN IMPACTING CAR OR MEDIUM SIZE TRUCK.
3. WHEN DIMENSION "A" WOULD EXCEED 12'-0", CONSIDERATION MAY BE GIVEN TO REDUCING DIMENSION "B" IN ACCORDANCE WITH PROVISIONS OF NOTE 4.
4. DIMENSION "B" MAY BE LESS THAN 7'-0":
   A. IF THE POST IS OUT OF THE CLEAR ZONE.
   B. IF THE POST IS WITHIN THE CLEAR ZONE BUT SHIELDED BY AN APPROPRIATE BARRIER SYSTEM.
   C. IN NO CASE SHALL DIMENSION "B" BE LESS THAN 2'-6".
5. IF FIELD CONDITIONS EXCEED THESE REQUIREMENTS, CONTACT THE ENGINEER FOR DIRECTION.

SAFETY CONSIDERATIONS

1. THE HINGE BETWEEN THE UPPER AND LOWER POSTS SHALL BE AT LEAST 7 FT. ABOVE THE GROUND.
2. NO SUPPLEMENTARY SIGNS SHALL BE ATTACHED BELOW THE HINGES.
3. THE POST SPACING SHALL BE 3/5 W EXCEPT AS NOTED BELOW:

UNIT WEIGHT OF POST	POST SPACING REQUIREMENTS
LESS THAN 18 PLF	NO RESTRICTIONS ON POST SPACING **
FROM 18 PLF TO 45 PLF	PROVIDE AT LEAST 7 FT. CLEAR DISTANCE BETWEEN POSTS ***
EXCEEDS 45 PLF	RELOCATE SIGN OUTSIDE OF CLEAR ZONE OR SHIELD SIGN FROM VEHICULAR IMPACT AS DIRECTED BY THE ENGINEER

** IF THE TOTAL COMBINED WEIGHT OF ONE LOWER POST AND TWO BRACKETS EXCEEDS 600 LBS OR THE COMBINED WEIGHT OF TWO POSTS AND FOUR BRACKETS LOCATED WITHIN A CLEAR DISTANCE OF 7 FT OF EACH OTHER EXCEEDS 600 LBS, THE SIGN SHALL BE RELOCATED OUTSIDE OF THE CLEAR ZONE OR SHALL BE PROPERLY SHIELDED FROM VEHICULAR IMPACT AS DIRECTED BY THE ENGINEER. SEE "TABLE 1 - BRACKET DATA" ON BSM-6 FOR BRACKET WEIGHT.

*** IF THE REQUIRED CLEAR DISTANCE CANNOT BE ATTAINED, THE ENGINEER MAY DIRECT THAT THE SIGN BE RELOCATED OUTSIDE THE CLEAR ZONE OR THAT IT BE PROPERLY SHIELDED FROM VEHICULAR IMPACT.

SELECTING A POST SIZE, BRACKET NUMBER, AND HINGE TYPE

1. DETERMINE THE REQUIRED SIGN DIMENSIONS AND POST HEIGHTS (SEE "TYPICAL POST MOUNTED SIGN" DETAIL, THIS SHEET).

   W = SIGN WIDTH (HORIZONTAL DIMENSION)
   H = SIGN HEIGHT (VERTICAL DIMENSION) (ADD CROWN HEIGHT WHEN APPLICABLE)
   L = POST HEIGHT (THE DISTANCE BETWEEN THE TOP OF THE FOUNDATION AND THE BOTTOM OF THE SIGN MEASURED AT THE TALLER POST)

2. ENTER "POST SELECTION TABLE 1 AND 2" ON DWG BSM-3 AND BSM-4 WITH THE DESIRED VALUES OF W, H, AND L. ROUND UP TO THE NEAREST VALUES IN THE TABLE. READ THE CORRESPONDING POST SIZE AND BRACKET NUMBER. REFER TO DWG BSM-6 FOR BRACKET TYPE AND BSM-7 FOR TYPICAL HINGE REQUIREMENTS.

   EXAMPLE: W = 8', L = 10', H = 14'

   ENTER "POST SELECTION TABLE 1" ON DWG BSM-3 SINCE TABLE 1 IS APPLICABLE FOR SIGN WIDTH ≤ 15'. LOCATE THE FOLLOWING CELL:

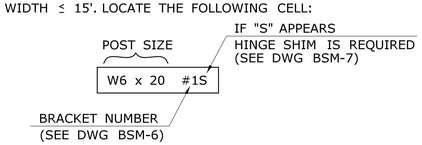

NOTES ON TOTAL HEIGHT OF SIGN POSTS

1. UPPER SIGN POSTS SHALL EXTEND TO THE TOP OF FULL WIDTH SIGN PANEL OR THE TOP OF CROWN, WHICHEVER IS HIGHER.
2. FOR SIGN OR CROWN PANEL RETROFIT, THE EXISTING SIGN POSTS SHALL BE REPLACED WITH NEW POSTS OR EXTENDED WITH ADDITIONAL SECTIONS USING HINGE ASSEMBLIES. REFER TO TRAFFIC TYPICAL SHEETS "EXTRUDED SIGN PANEL - RETROFIT DETAIL".

BREAKAWAY SIGN SUPPORT TYPICAL SHEETS ARE IN US CUSTOMARY UNITS

FOR METRIC PROJECTS:
1. DETERMINE US CUSTOMARY POST SIZE FROM THE POST SELECTION TABLE.
2. CALCULATE THE WEIGHT OF POSTS IN US CUSTOMARY UNITS (CWT) THEN USE THE FOLLOWING CONVERSION FACTOR TO CONVERT CWT TO KILOGRAMS.

1 CWT = 45.36 KG

EXAMPLE: 120 CWT x 45.36 KG/CWT = 5443 KG

TABLE OF CONTENT

DWG. NO.	DESCRIPTION
BSM-1	DRAWING INDEX
BSM-2	GENERAL NOTES
BSM-3	POST SELECTION TABLE 1 (W ≤ 15 FT.)
BSM-4	POST SELECTION TABLE 2 (W > 15 FT.)
BSM-4	FOUNDATION DETAILS
BSM-5	BRACKET DETAILS
BSM-6	HINGE DETAILS

REV.	DATE	REVISION DESCRIPTION	SHEET NO.

THE INFORMATION, INCLUDING ESTIMATED QUANTITIES OF WORK, SHOWN ON THESE SHEETS IS BASED ON LIMITED INVESTIGATIONS BY THE STATE AND IS IN NO WAY WARRANTED TO INDICATE THE CONDITIONS OF ACTUAL QUANTITIES OF WORK WHICH WILL BE REQUIRED.

Plotted Date: 6/19/2018

DESIGNER/DRAFTER: NJM
CHECKED BY: BKC
SCALE AS NOTED

STATE OF CONNECTICUT
DEPARTMENT OF TRANSPORTATION

Filename: ...\170-3447_SB_Breakaway_Signpost_BSM2_General Note_REV_1.dgn

SIGNATURE/BLOCK: OFFICE OF ENGINEERING
APPROVED BY: Mary E. Baker

PROJECT TITLE: STATEWIDE REPLACEMENT OF OVERHEAD SIGN SUPPORTS ON VARIOUS ROUTES

TOWN: VARIOUS
DRAWING TITLE: GENERAL NOTES

PROJECT NO. 170-3447
DRAWING NO. BSM-02
SHEET NO. 01.07.02

POST SELECTION TABLE 1

W	L	H (Sign Height + Crown Height)																		
		4 ft	5 ft	6 ft	7 ft	8 ft	9 ft	10 ft	11 ft	12 ft	13 ft	14 ft	15 ft	16 ft	17 ft	18 ft	19 ft	20 ft	21 ft	22 ft
8 ft	7 ft	W6 x 9 #3	W6 x 9 #3	W6 x 9 #2	W6 x 9 #2	W6 x 9 #2	W6 x 12 #2	W6 x 12 #2	W6 x 12 #2	W6 x 15 #2	W6 x 15 #1	W6 x 15 #1S	W6 x 16 #1S	W8 x 18 #2S	W8 x 21 #1S	W10 x 22 #2	W10 x 22 #2	W10 x 26 #2	W10 x 26 #1S	W10 x 26 #1S
	8 ft	W6 x 9 #2	W6 x 9 #2	W6 x 9 #2	W6 x 9 #2	W6 x 12 #2	W6 x 12 #2	W6 x 12 #2	W6 x 15 #2	W6 x 15 #1	W6 x 15 #1	W6 x 16 #1S	W8 x 18 #1	W8 x 21 #1S	W8 x 21 #1S	W10 x 22 #2	W10 x 26 #1	W10 x 26 #1	W10 x 26 #1S	W10 x 30 #1S
	9 ft	W6 x 9 #2	W6 x 9 #2	W6 x 9 #2	W6 x 12 #2	W6 x 12 #2	W6 x 12 #2	W6 x 15 #1	W6 x 15 #1	W6 x 15 #1	W6 x 16 #1	W8 x 18 #1	W6 x 20 #1S	W8 x 21 #1S	W8 x 21 #1S	W10 x 26 #1	W10 x 26 #1	W10 x 26 #1	W10 x 30 #1S	W12 x 30 #1
	10 ft	W6 x 9 #2	W6 x 9 #2	W6 x 12 #2	W6 x 12 #2	W6 x 12 #1	W6 x 15 #1	W6 x 15 #1	W6 x 15 #1	W6 x 15 #1	W8 x 18 #1	W6 x 20 #1S	W6 x 20 #1S	W8 x 21 #1S	W10 x 26 #1	W10 x 26 #1	W10 x 26 #1	-	-	-
	11 ft	W6 x 9 #2	W6 x 9 #2	W6 x 12 #1	W6 x 12 #1	W6 x 15 #1	W6 x 15 #1	W6 x 15 #1	W6 x 15 #1	W8 x 18 #1	W6 x 20 #1	W6 x 20 #1S	W8 x 21 #1	-	-	-	-	-	-	-
	12 ft	W6 x 9 #2	W6 x 12 #1	W6 x 12 #1	W6 x 15 #1	W6 x 15 #1	W6 x 15 #1	W6 x 15 #1	W8 x 18 #1	W6 x 20 #1	W6 x 20 #1	W6 x 20 #1S	-	-	-	-	-	-	-	-
	13 ft	W6 x 12 #1	W6 x 12 #1	W6 x 12 #1	W6 x 15 #1	W6 x 15 #1	W6 x 15 #1	W8 x 18 #1	W8 x 18 #1	W6 x 20 #1	W6 x 20 #1	-	-	-	-	-	-	-	-	-
	14 ft	W6 x 12 #1	W6 x 12 #1	W6 x 15 #1	W6 x 15 #1	W6 x 15 #1	W6 x 16 #1	W8 x 18 #1	W6 x 20 #1	W6 x 20 #1	-	-	-	-	-	-	-	-	-	-
	15 ft	W6 x 12 #1	W6 x 15 #1	W6 x 15 #1	W6 x 15 #1	W6 x 15 #1	W8 x 18 #1	-	-	-	-	-	-	-	-	-	-	-	-	-
	16 ft	W6 x 12 #1	W6 x 15 #1	W6 x 15 #1	W6 x 15 #1	-	-	-	-	-	-	-	-	-	-	-	-	-	-	-
9 ft	7 ft	W6 x 9 #3	W6 x 9 #3	W6 x 9 #2	W6 x 9 #2	W8 x 10 #2	W6 x 12 #2	W6 x 12 #2	W6 x 15 #2	W6 x 15 #2	W6 x 15 #1S	W6 x 15 #1S	W8 x 18 #2S	W8 x 21 #2S	W10 x 22 #2	W10 x 22 #2	W10 x 26 #2	W10 x 26 #2S	W10 x 26 #1S	W12 x 30 #2S
	8 ft	W6 x 9 #2	W6 x 9 #2	W6 x 9 #2	W8 x 10 #2	W6 x 12 #2	W6 x 12 #2	W6 x 15 #2	W6 x 15 #2	W6 x 15 #1	W6 x 15 #1S	W8 x 18 #2	W8 x 21 #2S	W8 x 21 #1S	W10 x 22 #2	W10 x 26 #2	W10 x 26 #1	W10 x 26 #1S	W12 x 30 #2	W12 x 30 #2S
	9 ft	W6 x 9 #2	W6 x 9 #2	W6 x 9 #2	W6 x 12 #2	W6 x 12 #2	W6 x 15 #2	W6 x 15 #1	W6 x 15 #1	W6 x 15 #1	W8 x 18 #2	W6 x 20 #1S	W8 x 21 #1S	W8 x 21 #1S	W10 x 26 #2	W10 x 26 #2	W10 x 26 #1	W10 x 30 #1S	W12 x 30 #1	-
	10 ft	W6 x 9 #2	W6 x 9 #2	W6 x 12 #2	W6 x 12 #2	W6 x 15 #1	W6 x 15 #1	W6 x 15 #1	W6 x 15 #1	W8 x 18 #1	W6 x 20 #1S	W6 x 20 #1S	W8 x 21 #1S	W10 x 26 #1	W10 x 26 #1	W10 x 26 #1	-	-	-	-
	11 ft	W6 x 9 #2	W6 x 12 #2	W6 x 12 #2	W6 x 12 #1	W6 x 15 #1	W6 x 15 #1	W6 x 15 #1	W8 x 18 #1	W6 x 20 #1	W6 x 20 #1S	W8 x 21 #1	-	-	-	-	-	-	-	-
	12 ft	W6 x 9 #2	W6 x 12 #1	W6 x 12 #1	W6 x 15 #1	W6 x 15 #1	W6 x 15 #1	W8 x 18 #1	W6 x 20 #1	W6 x 20 #1	W6 x 20 #1	-	-	-	-	-	-	-	-	-
	13 ft	W6 x 12 #1	W6 x 12 #1	W6 x 15 #1	W6 x 15 #1	W6 x 15 #1	W6 x 16 #1	W8 x 18 #1	W6 x 20 #1	W6 x 20 #1	-	-	-	-	-	-	-	-	-	-
	14 ft	W6 x 12 #1	W6 x 12 #1	W6 x 15 #1	W6 x 15 #1	W6 x 15 #1	W8 x 18 #1	W6 x 20 #1	W6 x 20 #1	W6 x 20 #1	-	-	-	-	-	-	-	-	-	-
	15 ft	W6 x 12 #1	W6 x 15 #1	W6 x 15 #1	W6 x 15 #1	W8 x 18 #1	-	-	-	-	-	-	-	-	-	-	-	-	-	-
	16 ft	W6 x 15 #1	W6 x 15 #1	W6 x 15 #1	-	-	-	-	-	-	-	-	-	-	-	-	-	-	-	-
10 ft	7 ft	W6 x 9 #3	W6 x 9 #3	W6 x 9 #2	W6 x 9 #2	W6 x 12 #2	W6 x 12 #2	W6 x 12 #2	W6 x 15 #2	W6 x 15 #2	W6 x 15 #1S	W8 x 18 #2	W8 x 18 #2S	W10 x 22 #2	W10 x 22 #2	W10 x 26 #2	W10 x 26 #2S	W10 x 26 #2S	W12 x 30 #2S	W14 x 30 #2S
	8 ft	W6 x 9 #2	W6 x 9 #2	W6 x 9 #2	W6 x 12 #2	W6 x 12 #2	W6 x 12 #2	W6 x 15 #2	W6 x 15 #1	W6 x 15 #1	W8 x 18 #2	W8 x 18 #2S	W8 x 21 #1S	W10 x 22 #2	W10 x 26 #2	W10 x 26 #2	W10 x 26 #1S	W12 x 30 #2	W14 x 30 #2	-
	9 ft	W6 x 9 #2	W6 x 9 #2	W6 x 12 #2	W6 x 12 #2	W6 x 12 #2	W6 x 15 #2	W6 x 15 #1	W6 x 15 #1	W8 x 18 #1	W6 x 20 #1	W6 x 20 #1S	W8 x 21 #1S	W8 x 21 #1S	W10 x 26 #2	W10 x 26 #2	W10 x 26 #1	W12 x 30 #1S	W12 x 30 #2	-
	10 ft	W6 x 9 #2	W6 x 12 #2	W6 x 12 #2	W6 x 12 #2	W6 x 15 #1	W6 x 15 #1	W6 x 15 #1	W6 x 16 #1	W8 x 18 #1	W6 x 20 #1S	W6 x 20 #1S	W8 x 21 #1S	W10 x 26 #2	W10 x 26 #1	W10 x 26 #1	-	-	-	-
	11 ft	W6 x 9 #2	W6 x 12 #2	W6 x 12 #1	W6 x 15 #1	W6 x 15 #1	W6 x 15 #1	W6 x 16 #1	W8 x 18 #1	W6 x 20 #1	W6 x 20 #1S	W8 x 24 #1S	-	-	-	-	-	-	-	-
	12 ft	W6 x 12 #2	W6 x 12 #1	W6 x 15 #1	W6 x 15 #1	W6 x 15 #1	W6 x 15 #1	W8 x 18 #1	W6 x 20 #1	W6 x 20 #1	W10 x 22 #1	-	-	-	-	-	-	-	-	-
	13 ft	W6 x 12 #1	W6 x 12 #1	W6 x 15 #1	W6 x 15 #1	W6 x 15 #1	W8 x 18 #1	W6 x 20 #1	W6 x 20 #1	W8 x 21 #1	-	-	-	-	-	-	-	-	-	-
	14 ft	W6 x 12 #1	W6 x 15 #1	W6 x 15 #1	W6 x 15 #1	W8 x 18 #1	W6 x 20 #1	W6 x 20 #1	W6 x 20 #1	-	-	-	-	-	-	-	-	-	-	-
	15 ft	W6 x 12 #1	W6 x 15 #1	W6 x 15 #1	W6 x 16 #1	W8 x 18 #1	-	-	-	-	-	-	-	-	-	-	-	-	-	-
	16 ft	W6 x 15 #1	W6 x 15 #1	W6 x 15 #1	-	-	-	-	-	-	-	-	-	-	-	-	-	-	-	-
11 ft	7 ft	W6 x 9 #3	W6 x 9 #3	W6 x 9 #2	W8 x 10 #3	W6 x 12 #2	W6 x 12 #2	W6 x 15 #2	W6 x 15 #2	W6 x 15 #2S	W6 x 15 #1S	W8 x 18 #2S	W8 x 21 #2S	W10 x 22 #2	W10 x 22 #2	W10 x 26 #2	W10 x 26 #2S	W12 x 26 #2S	W14 x 30 #2S	W16 x 36 #2S
	8 ft	W6 x 9 #2	W6 x 9 #2	W6 x 9 #2	W6 x 12 #2	W6 x 12 #2	W6 x 15 #2	W6 x 15 #2	W6 x 15 #1	W6 x 15 #1S	W8 x 18 #2	W8 x 21 #2S	W8 x 21 #1S	W10 x 22 #2	W10 x 26 #2	W10 x 26 #2	W10 x 26 #2S	W12 x 30 #2	W14 x 30 #2	-
	9 ft	W6 x 9 #2	W6 x 9 #2	W6 x 12 #2	W6 x 12 #2	W6 x 15 #2	W6 x 15 #2	W6 x 15 #1	W6 x 15 #1	W8 x 18 #2	W6 x 20 #1S	W8 x 21 #1S	W10 x 22 #2	W10 x 26 #2	W10 x 26 #1	W10 x 26 #1	W10 x 26 #1S	W12 x 30 #2	-	-
	10 ft	W6 x 9 #2	W6 x 12 #2	W6 x 12 #2	W6 x 15 #2	W6 x 15 #1	W6 x 15 #1	W6 x 15 #1	W8 x 18 #2	W6 x 20 #1S	W6 x 20 #1S	W8 x 21 #1S	W10 x 26 #2	W10 x 26 #1	W10 x 26 #1	-	-	-	-	-
	11 ft	W6 x 9 #2	W6 x 12 #2	W6 x 12 #1	W6 x 15 #1	W6 x 15 #1	W6 x 15 #1	W8 x 18 #1	W6 x 20 #1	W6 x 20 #1S	W8 x 21 #1	-	-	-	-	-	-	-	-	-
	12 ft	W6 x 12 #2	W6 x 12 #1	W6 x 15 #1	W6 x 15 #1	W6 x 15 #1	W8 x 18 #1	W6 x 20 #1	W6 x 20 #1	W8 x 21 #1	-	-	-	-	-	-	-	-	-	-
	13 ft	W6 x 12 #1	W6 x 15 #1	W6 x 15 #1	W6 x 15 #1	W8 x 18 #1	W8 x 18 #1	W6 x 20 #1	W6 x 20 #1	-	-	-	-	-	-	-	-	-	-	-
	14 ft	W6 x 12 #1	W6 x 15 #1	W6 x 15 #1	W6 x 15 #1	W8 x 18 #1	W6 x 20 #1	W6 x 20 #1	-	-	-	-	-	-	-	-	-	-	-	-
	15 ft	W6 x 15 #1	W6 x 15 #1	W6 x 15 #1	W8 x 18 #1	-	-	-	-	-	-	-	-	-	-	-	-	-	-	-
	16 ft	W6 x 15 #1	W6 x 15 #1	-	-	-	-	-	-	-	-	-	-	-	-	-	-	-	-	-
12 ft	7 ft	W6 x 9 #3	W6 x 9 #3	W6 x 9 #2	W6 x 12 #2	W6 x 12 #2	W6 x 12 #2	W6 x 15 #2	W6 x 15 #2	W6 x 15 #2S	W8 x 18 #2S	W8 x 18 #2S	W10 x 22 #2	W10 x 22 #2	W10 x 26 #2	W10 x 26 #2S	W12 x 26 #2S	W14 x 30 #2S	W18 x 35 #2	W18 x 40 #2
	8 ft	W6 x 9 #2	W6 x 9 #2	W6 x 12 #2	W6 x 12 #2	W6 x 12 #2	W6 x 15 #2	W6 x 15 #2	W6 x 15 #1	W8 x 18 #2	W8 x 18 #2S	W8 x 21 #2S	W10 x 22 #2	W10 x 26 #2	W10 x 26 #2	W12 x 26 #2	W14 x 30 #2	W18 x 35 #2	-	-
	9 ft	W6 x 9 #2	W8 x 10 #2	W6 x 12 #2	W6 x 12 #2	W6 x 15 #2	W6 x 15 #2	W6 x 15 #1	W8 x 18 #2	W8 x 18 #2	W8 x 21 #1S	W8 x 21 #1S	W10 x 26 #2	W10 x 26 #2	W10 x 26 #1	W12 x 30 #2	-	-	-	-
	10 ft	W6 x 9 #2	W6 x 12 #2	W6 x 12 #2	W6 x 15 #2	W6 x 15 #1	W6 x 15 #1	W8 x 18 #2	W8 x 18 #1	W6 x 20 #1S	W8 x 21 #1S	W10 x 26 #2	W10 x 26 #1	W10 x 26 #1	-	-	-	-	-	-
	11 ft	W6 x 12 #2	W6 x 12 #2	W6 x 15 #1	W6 x 15 #1	W6 x 15 #1	W6 x 16 #1	W8 x 18 #1	W6 x 20 #1	W8 x 21 #1	-	-	-	-	-	-	-	-	-	-
	12 ft	W6 x 12 #2	W6 x 12 #1	W6 x 15 #1	W6 x 15 #1	W6 x 15 #1	W8 x 18 #1	W6 x 20 #1	W6 x 20 #1	-	-	-	-	-	-	-	-	-	-	-
	13 ft	W6 x 12 #1	W6 x 15 #1	W6 x 15 #1	W6 x 15 #1	W8 x 18 #1	W6 x 20 #1	W6 x 20 #1	-	-	-	-	-	-	-	-	-	-	-	-
	14 ft	W6 x 12 #1	W6 x 15 #1	W6 x 15 #1	W8 x 18 #1	W6 x 20 #1	W6 x 20 #1	W6 x 20 #1	-	-	-	-	-	-	-	-	-	-	-	-
	15 ft	W6 x 15 #1	W6 x 15 #1	W6 x 16 #1	W8 x 18 #1	-	-	-	-	-	-	-	-	-	-	-	-	-	-	-
	16 ft	W6 x 15 #1	W6 x 15 #1	-	-	-	-	-	-	-	-	-	-	-	-	-	-	-	-	-
13 ft	7 ft	W6 x 9 #3	W6 x 9 #2	W6 x 9 #2	W6 x 12 #2	W6 x 12 #2	W6 x 15 #2	W6 x 15 #2	W6 x 15 #2S	W6 x 15 #2S	W8 x 18 #2S	W8 x 21 #2S	W10 x 22 #2	W10 x 22 #2	W10 x 26 #2S	W12 x 26 #2	W14 x 30 #2	W18 x 35 #3	W18 x 40 #2	W21 x 44 #3
	8 ft	W6 x 9 #2	W6 x 9 #2	W6 x 12 #2	W6 x 12 #2	W6 x 15 #2	W6 x 15 #2	W6 x 15 #2	W6 x 15 #1S	W8 x 18 #2	W8 x 21 #2S	W8 x 21 #2S	W10 x 22 #2	W10 x 26 #2	W10 x 26 #2S	W12 x 30 #2	W14 x 34 #2	W18 x 40 #2	W21 x 44 #3	W21 x 44 #3
	9 ft	W6 x 9 #2	W6 x 12 #2	W6 x 12 #2	W6 x 15 #2	W6 x 15 #2	W6 x 15 #1	W6 x 15 #1	W8 x 18 #2	W6 x 20 #1S	W8 x 21 #1S	W10 x 22 #2	W10 x 26 #2	W10 x 26 #2	W12 x 30 #2	W14 x 30 #2	W16 x 36 #2	W18 x 40 #2	W21 x 44 #2	-
	10 ft	W6 x 9 #2	W6 x 12 #2	W6 x 12 #2	W6 x 15 #2	W6 x 15 #1	W6 x 15 #1	W8 x 18 #2	W6 x 20 #1S	W8 x 21 #1	W10 x 22 #2	W10 x 26 #2	W10 x 26 #1	W12 x 30 #2	W14 x 30 #2	W16 x 36 #2	W18 x 40 #2	W21 x 44 #2	-	-
	11 ft	W6 x 12 #2	W6 x 12 #2	W6 x 15 #1	W6 x 15 #1	W6 x 15 #1	W8 x 18 #2	W6 x 20 #1	W6 x 20 #1S	W8 x 21 #1	W10 x 26 #2	W10 x 26 #1	W10 x 30 #1	W12 x 30 #2	W14 x 34 #2	W18 x 40 #2	W21 x 44 #2	-	-	-
	12 ft	W6 x 12 #1	W6 x 15 #1	W6 x 15 #1	W6 x 15 #1	W8 x 18 #1	W6 x 20 #1	W6 x 20 #1	W8 x 21 #1	W10 x 26 #1	W10 x 26 #1	W10 x 26 #1	W12 x 30 #2	W14 x 34 #2	W16 x 36 #2	W18 x 40 #2	-	-	-	-
	13 ft	W6 x 12 #1	W6 x 15 #1	W6 x 15 #1	W6 x 16 #1	W8 x 18 #1	W6 x 20 #1	W8 x 21 #1	W10 x 26 #1	W10 x 26 #1	W10 x 26 #1	W10 x 30 #1	W12 x 30 #1	W16 x 36 #2	W18 x 40 #2	-	-	-	-	-
	14 ft	W6 x 15 #1	W6 x 15 #1	W6 x 15 #1	W8 x 18 #1	W6 x 20 #1	W6 x 20 #1	W8 x 24 #1	W10 x 26 #1	W10 x 26 #1	W10 x 30 #1	W12 x 30 #1	W14 x 34 #1	W16 x 40 #2	-	-	-	-	-	-
	15 ft	W6 x 15 #1	W6 x 15 #1	W8 x 18 #1	W6 x 20 #1	W6 x 20 #1	W8 x 24 #1	W10 x 26 #1	W10 x 26 #1	W10 x 30 #1	W10 x 30 #1	W14 x 34 #1	-	-	-	-	-	-	-	-
	16 ft	W6 x 15 #1	W6 x 16 #1	W8 x 18 #1	W6 x 20 #1	W6 x 20 #1	W8 x 24 #1	W10 x 26 #1	W10 x 30 #1	W10 x 30 #1	W14 x 34 #1	W14 x 34 #1	-	-	-	-	-	-	-	-
14 ft	7 ft	W6 x 9 #3	W6 x 9 #2	W8 x 10 #3	W6 x 12 #2	W6 x 12 #2	W6 x 15 #2	W6 x 15 #2	W6 x 15 #2S	W8 x 18 #2	W8 x 18 #2S	W10 x 22 #2	W10 x 22 #2	W10 x 26 #2	W10 x 26 #2S	W12 x 26 #2S	W14 x 30 #2S	W18 x 35 #3	W21 x 44 #3	-
	8 ft	W6 x 9 #2	W6 x 9 #2	W6 x 12 #2	W6 x 12 #2	W6 x 15 #2	W6 x 15 #2	W6 x 15 #2	W8 x 18 #2	W8 x 18 #2S	W8 x 21 #2S	W10 x 22 #2	W10 x 26 #2	W10 x 26 #2	W12 x 26 #2	W14 x 30 #2	W18 x 35 #2	W18 x 40 #2	W21 x 44 #3	-
	9 ft	W6 x 9 #2	W6 x 12 #2	W6 x 12 #2	W6 x 15 #2	W6 x 15 #2	W6 x 15 #1	W8 x 18 #2	W8 x 18 #2	W8 x 21 #2S	W10 x 22 #2	W10 x 26 #2	W10 x 26 #2	W12 x 26 #2	W14 x 30 #2	W16 x 36 #2	W18 x 40 #2	W21 x 44 #3	-	-
	10 ft	W6 x 12 #2	W6 x 12 #2	W6 x 15 #2	W6 x 15 #2	W6 x 15 #1	W8 x 18 #2	W8 x 18 #2	W6 x 20 #1S	W8 x 21 #1S	W10 x 26 #2	W10 x 26 #2	W10 x 26 #1	W12 x 30 #2	W16 x 36 #2	W18 x 40 #2	W21 x 44 #3	-	-	-
	11 ft	W6 x 12 #2	W6 x 12 #2	W6 x 15 #1	W6 x 15 #1	W6 x 16 #1	W8 x 18 #2	W6 x 20 #1	W8 x 21 #1	W10 x 26 #2	W10 x 26 #2	W10 x 26 #1	W12 x 30 #2	W14 x 34 #2	W16 x 36 #2	W18 x 40 #2	-	-	-	-
	12 ft	W6 x 12 #1	W6 x 15 #1	W6 x 15 #1	W6 x 15 #1	W8 x 18 #1	W6 x 20 #1	W8 x 21 #1	W10 x 26 #2	W10 x 26 #1	W10 x 26 #1	W10 x 30 #1	W14 x 34 #2	W16 x 36 #2	W18 x 40 #2	-	-	-	-	-
	13 ft	W6 x 12 #1	W6 x 15 #1	W6 x 15 #1	W8 x 18 #1	W6 x 20 #1	W8 x 24 #1	W10 x 26 #1	W10 x 26 #1	W10 x 30 #1	W12 x 30 #1	W14 x 34 #2	W16 x 36 #2	W18 x 40 #2	-	-	-	-	-	-
	14 ft	W6 x 15 #1	W6 x 15 #1	W6 x 16 #1	W6 x 20 #1	W6 x 20 #1	W8 x 24 #1	W10 x 26 #1	W10 x 30 #1	W10 x 30 #1	W14 x 34 #1	W16 x 36 #2	-	-	-	-	-	-	-	-
	15 ft	W6 x 15 #1	W6 x 15 #1	W8 x 18 #1	W6 x 20 #1	W6 x 20 #1	W8 x 24 #1	W10 x 26 #1	W10 x 30 #1	W10 x 30 #1	W12 x 30 #1	W14 x 34 #1	-	-	-	-	-	-	-	-
	16 ft	W6 x 15 #1	W8 x 18 #1	W6 x 20 #1	W6 x 20 #1	W8 x 24 #1	W10 x 26 #1	W10 x 30 #1	W10 x 30 #1	W14 x 34 #1	-	-	-	-	-	-	-	-	-	-
15 ft	7 ft	-	W6 x 9 #2	W8 x 10 #3	W6 x 12 #2	W12 x 14 #3	W6 x 15 #2	W6 x 15 #2S	W6 x 15 #2S	W8 x 18 #2S	W8 x 21 #2S	W10 x 22 #2	W10 x 22 #2	W10 x 26 #2S	W12 x 26 #2	W14 x 30 #2	W18 x 35 #3	W18 x 40 #3	W21 x 44 #3	-
	8 ft	-	W8 x 10 #3	W6 x 12 #2	W12 x 14 #3	W6 x 15 #2	W6 x 15 #2	W6 x 15 #2S	W8 x 18 #2	W8 x 21 #2S	W10 x 22 #2	W10 x 22 #2	W10 x 26 #2	W12 x 26 #2	W14 x 30 #2	W18 x 35 #3	W18 x 40 #2	W21 x 44 #3	-	-
	9 ft	-	W6 x 12 #2	W6 x 12 #2	W6 x 15 #2	W6 x 15 #2	W6 x 15 #1	W8 x 18 #2	W6 x 20 #1S	W8 x 21 #2S	W10 x 22 #2	W10 x 26 #2	W10 x 26 #2	W12 x 30 #2	W14 x 34 #2	W18 x 40 #2	W21 x 44 #3	-	-	-
	10 ft	-	W6 x 12 #2	W6 x 15 #2	W6 x 15 #2	W6 x 15 #1	W8 x 18 #2	W6 x 20 #1S	W8 x 21 #1	W10 x 22 #2	W10 x 26 #2	W10 x 26 #2	W12 x 30 #2	W14 x 30 #2	W16 x 36 #2	W18 x 40 #2	W21 x 44 #2	-	-	-
	11 ft	-	W6 x 15 #2	W6 x 15 #1	W6 x 15 #1	W8 x 18 #2	W6 x 20 #1	W8 x 21 #1	W10 x 22 #2	W10 x 26 #2	W10 x 26 #1	W10 x 30 #1	W14 x 30 #2	W16 x 36 #2	W18 x 40 #2	W21 x 44 #2	-	-	-	-
	12 ft	-	W6 x 15 #1	W6 x 15 #1	W6 x 16 #1	W8 x 18 #1	W6 x 20 #1	W8 x 21 #1	W10 x 26 #2	W10 x 26 #1	W10 x 30 #1	W12 x 30 #2	W14 x 34 #2	W18 x 40 #2	W21 x 44 #2	-	-	-	-	-
	13 ft	-	W6 x 15 #1	W6 x 15 #1	W8 x 18 #1	W6 x 20 #1	W8 x 21 #1	W10 x 26 #1	W10 x 26 #1	W10 x 26 #1	W12 x 30 #2	W14 x 34 #2	W16 x 36 #2	W18 x 40 #2	-	-	-	-	-	-
	14 ft	-	W6 x 15 #1	W8 x 18 #1	W6 x 20 #1	W6 x 20 #1	W8 x 24 #1	W10 x 26 #1	W10 x 26 #1	W10 x 30 #1	W12 x 30 #1	W16 x 36 #2	W18 x 40 #2	-	-	-	-	-	-	-
	15 ft	-	W6 x 16 #1	W8 x 18 #1	W6 x 20 #1	W8 x 24 #1	W10 x 26 #1	W10 x 26 #1	W10 x 30 #1	W12 x 30 #1	W14 x 34 #1	-	-	-	-	-	-	-	-	-
	16 ft	-	W8 x 18 #1	W6 x 20 #1	W6 x 20 #1	W8 x 24 #1	W10 x 26 #1	W10 x 30 #1	W10 x 30 #1	W14 x 34 #1	-	-	-	-	-	-	-	-	-	-

REV.	DATE	REVISION DESCRIPTION	SHEET NO.

THE INFORMATION, INCLUDING ESTIMATED QUANTITIES OF WORK, SHOWN ON THESE SHEETS IS BASED ON LIMITED INVESTIGATIONS BY THE STATE AND IS IN NO WAY WARRANTED TO INDICATE THE CONDITIONS OF ACTUAL QUANTITIES OF WORK WHICH WILL BE REQUIRED.

Plotted Date: 6/19/2018

DESIGNER/DRAFTER: NJM

CHECKED BY: BKC

STATE OF CONNECTICUT
DEPARTMENT OF TRANSPORTATION

Filename: ...\170-3447_SB_Breakaway_Signpost_BSM3_PostSelectionTable_1.dgn

SIGNATURE/BLOCK: OFFICE OF ENGINEERING

APPROVED BY: Mary E Baker

PROJECT TITLE: STATEWIDE REPLACEMENT OF OVERHEAD SIGN SUPPORTS ON VARIOUS ROUTES

TOWN: VARIOUS

DRAWING TITLE: POST SELECTION TABLE 1 (W ≤ 15 FT.)

PROJECT NO. 170-3447

DRAWING NO. BSM-03

SHEET NO. 01.07.03

POST SELECTION TABLE 2

W	L	H (Sign Height + Crown Height)																		
		4 ft	5 ft	6 ft	7 ft	8 ft	9 ft	10 ft	11 ft	12 ft	13 ft	14 ft	15 ft	16 ft	17 ft	18 ft	19 ft	20 ft	21 ft	22 ft
16 ft	7 ft	-	W6 x 9 #2	W6 x 12 #2	W6 x 12 #2	W6 x 15 #2	W6 x 15 #2	W6 x 15 #2S	W8 x 18 #2	W8 x 18 #2S	W10 x 22 #2	W10 x 22 #2	W10 x 26 #2	W10 x 26 #2S	W12 x 26 #2S	W18 x 35 #3	W18 x 35 #3	W21 x 44 #3	-	-
	8 ft	-	W8 x 10 #3	W6 x 12 #2	W6 x 15 #2	W6 x 15 #2	W6 x 15 #2	W6 x 16 #2S	W8 x 18 #2	W8 x 21 #2S	W10 x 22 #2	W10 x 26 #2	W10 x 26 #2	W12 x 26 #2	W14 x 30 #2	W18 x 35 #3	W21 x 44 #3	-	-	-
	9 ft	-	W6 x 12 #2	W6 x 15 #2	W6 x 15 #2	W6 x 15 #2	W6 x 16 #1	W8 x 18 #2	W8 x 21 #2	W10 x 22 #2	W10 x 26 #2	W10 x 26 #2	W12 x 26 #2	W14 x 30 #2	W18 x 35 #2	W18 x 40 #2	W21 x 44 #3	-	-	-
	10 ft	-	W6 x 12 #2	W6 x 15 #2	W6 x 15 #2	W6 x 16 #1	W8 x 18 #2	W8 x 21 #2	W8 x 21 #1	W10 x 26 #2	W10 x 26 #2	W12 x 26 #2	W14 x 30 #2	W16 x 36 #2	W18 x 40 #2	W21 x 44 #3	-	-	-	-
	11 ft	-	W6 x 15 #2	W6 x 15 #1	W6 x 15 #1	W8 x 18 #2	W6 x 20 #1	W8 x 21 #1	W10 x 26 #2	W10 x 26 #2	W10 x 26 #1	W12 x 30 #2	W14 x 34 #2	W18 x 40 #2	W21 x 44 #3	-	-	-	-	-
	12 ft	-	W6 x 15 #1	W6 x 15 #1	W8 x 18 #2	W6 x 20 #1	W8 x 21 #1	W10 x 26 #2	W10 x 26 #2	W10 x 26 #1	W12 x 30 #2	W14 x 34 #2	W16 x 36 #2	W18 x 40 #2	-	-	-	-	-	-
	13 ft	-	W6 x 15 #1	W6 x 16 #1	W6 x 20 #1	W6 x 20 #1	W10 x 22 #2	W10 x 26 #1	W10 x 26 #1	W10 x 30 #1	W14 x 34 #2	W16 x 36 #2	W18 x 40 #2	-	-	-	-	-	-	-
	14 ft	-	W6 x 15 #1	W8 x 18 #1	W6 x 20 #1	W8 x 21 #1	W10 x 26 #1	W10 x 26 #1	W10 x 30 #1	W12 x 30 #1	W14 x 34 #2	W18 x 40 #2	-	-	-	-	-	-	-	-
	15 ft	-	W8 x 18 #1	W6 x 20 #1	W6 x 20 #1	W8 x 24 #1	W10 x 26 #1	W10 x 30 #1	W10 x 30 #1	W14 x 34 #2	W16 x 36 #2	-	-	-	-	-	-	-	-	-
	16 ft	-	W8 x 18 #1	W6 x 20 #1	W8 x 24 #1	W10 x 26 #1	W10 x 26 #1	W10 x 30 #1	W12 x 30 #1	W14 x 34 #1	-	-	-	-	-	-	-	-	-	-
17 ft	7 ft	-	W6 x 9 #2	W6 x 12 #2	W6 x 12 #2	W6 x 15 #2	W6 x 15 #2	W6 x 15 #2S	W8 x 18 #2S	W8 x 21 #2S	W10 x 22 #2	W10 x 22 #2	W10 x 26 #2S	W12 x 26 #2	W14 x 30 #2	W18 x 35 #3	W21 x 44 #3	-	-	-
	8 ft	-	W6 x 12 #2	W6 x 12 #2	W6 x 15 #2	W6 x 15 #2	W6 x 15 #2	W8 x 18 #2	W8 x 21 #2S	W10 x 22 #2	W10 x 22 #2	W10 x 26 #2	W12 x 26 #2	W14 x 30 #2	W18 x 35 #3	W18 x 40 #3	W21 x 44 #3	-	-	-
	9 ft	-	W6 x 12 #2	W6 x 15 #2	W6 x 15 #2	W6 x 15 #2	W8 x 18 #2	W6 x 20 #1S	W8 x 21 #2S	W10 x 22 #2	W10 x 26 #2	W10 x 26 #2	W14 x 30 #2	W18 x 35 #3	W18 x 40 #2	W21 x 44 #3	-	-	-	-
	10 ft	-	W6 x 12 #2	W6 x 15 #2	W6 x 15 #1	W8 x 18 #2	W6 x 20 #1	W8 x 21 #2	W10 x 22 #2	W10 x 26 #2	W10 x 26 #2	W12 x 30 #2	W14 x 34 #2	W18 x 40 #2	W21 x 44 #3	-	-	-	-	-
	11 ft	-	W6 x 15 #2	W6 x 15 #1	W6 x 16 #1	W8 x 18 #2	W8 x 21 #2	W10 x 22 #2	W10 x 26 #2	W10 x 26 #2	W12 x 30 #2	W14 x 30 #2	W16 x 36 #2	W18 x 40 #2	W21 x 44 #3	-	-	-	-	-
	12 ft	-	W6 x 15 #1	W6 x 15 #1	W8 x 18 #2	W6 x 20 #1	W8 x 21 #1	W10 x 26 #2	W10 x 26 #2	W10 x 30 #1	W14 x 30 #2	W16 x 36 #2	W18 x 40 #2	W21 x 44 #2	-	-	-	-	-	-
	13 ft	-	W6 x 15 #1	W8 x 18 #1	W6 x 20 #1	W8 x 21 #1	W10 x 26 #2	W10 x 26 #1	W10 x 26 #1	W12 x 30 #2	W14 x 34 #2	W18 x 40 #2	W21 x 44 #2	-	-	-	-	-	-	-
	14 ft	-	W6 x 15 #1	W8 x 18 #1	W6 x 20 #1	W8 x 24 #1	W10 x 26 #1	W10 x 26 #1	W12 x 30 #2	W14 x 34 #2	W16 x 36 #2	W18 x 40 #2	-	-	-	-	-	-	-	-
	15 ft	-	W8 x 18 #1	W6 x 20 #1	W8 x 21 #1	W10 x 26 #1	W10 x 26 #1	W10 x 30 #1	W12 x 30 #1	W16 x 36 #2	-	-	-	-	-	-	-	-	-	-
	16 ft	-	W6 x 20 #1	W6 x 20 #1	W8 x 24 #1	W10 x 26 #1	W10 x 30 #1	W12 x 30 #1	W14 x 34 #1	-	-	-	-	-	-	-	-	-	-	-
18 ft	7 ft	-	W8 x 10 #3	W6 x 12 #2	W12 x 14 #3	W6 x 15 #2	W6 x 15 #2S	W6 x 15 #2S	W8 x 18 #2S	W8 x 21 #2S	W10 x 22 #2	W10 x 26 #2	W12 x 26 #2	W14 x 30 #2	W18 x 35 #3	W18 x 35 #3	W21 x 44 #3	-	-	-
	8 ft	-	W6 x 12 #2	W6 x 12 #2	W6 x 15 #2	W6 x 15 #2	W6 x 15 #2S	W8 x 18 #2	W8 x 21 #2S	W10 x 22 #2	W10 x 26 #2	W10 x 26 #2	W12 x 26 #2	W18 x 35 #3	W18 x 35 #3	W21 x 44 #3	-	-	-	-
	9 ft	-	W6 x 12 #2	W6 x 15 #2	W6 x 15 #2	W6 x 15 #2	W8 x 18 #2	W8 x 21 #2	W10 x 22 #2	W10 x 26 #2	W10 x 26 #2	W12 x 26 #2	W14 x 30 #2	W18 x 35 #3	W21 x 44 #3	-	-	-	-	-
	10 ft	-	W6 x 15 #2	W6 x 15 #2	W6 x 15 #1	W8 x 18 #2	W8 x 21 #2	W10 x 22 #2	W10 x 26 #2	W10 x 26 #2	W12 x 26 #2	W14 x 30 #2	W18 x 35 #2	W18 x 40 #2	W21 x 44 #3	-	-	-	-	-
	11 ft	-	W6 x 15 #1	W6 x 15 #1	W8 x 18 #2	W6 x 20 #1	W8 x 21 #2	W10 x 22 #2	W10 x 26 #2	W10 x 26 #2	W12 x 30 #2	W14 x 30 #2	W16 x 36 #2	W18 x 40 #2	W21 x 44 #3	-	-	-	-	-
	12 ft	-	W6 x 15 #1	W6 x 15 #1	W8 x 18 #2	W8 x 21 #1	W10 x 22 #2	W10 x 26 #2	W10 x 26 #1	W12 x 30 #2	W14 x 34 #2	W18 x 40 #2	W21 x 44 #3	-	-	-	-	-	-	-
	13 ft	-	W6 x 15 #1	W8 x 18 #1	W6 x 20 #1	W8 x 21 #1	W10 x 26 #2	W10 x 26 #1	W10 x 30 #1	W14 x 34 #2	W16 x 36 #2	W18 x 40 #2	-	-	-	-	-	-	-	-
	14 ft	-	W6 x 16 #1	W6 x 20 #1	W6 x 20 #1	W10 x 26 #1	W10 x 26 #1	W10 x 30 #1	W12 x 30 #2	W16 x 36 #2	W18 x 40 #2	-	-	-	-	-	-	-	-	-
	15 ft	-	W8 x 18 #1	W6 x 20 #1	W8 x 24 #1	W10 x 26 #1	W10 x 26 #1	W12 x 30 #1	W14 x 34 #2	W16 x 36 #2	-	-	-	-	-	-	-	-	-	-
	16 ft	-	W6 x 20 #1	W6 x 20 #1	W10 x 26 #1	W10 x 26 #1	W10 x 30 #1	W12 x 30 #1	W16 x 36 #2	-	-	-	-	-	-	-	-	-	-	-
19 ft	7 ft	-	-	W6 x 12 #2	W12 x 14 #3	W6 x 15 #2	W6 x 15 #2S	W8 x 18 #2	W8 x 18 #2S	W10 x 22 #2	W10 x 22 #2	W10 x 26 #2	W12 x 26 #2	W14 x 30 #2	W18 x 35 #3	W21 x 44 #3	-	-	-	-
	8 ft	-	-	W12 x 14 #3	W6 x 15 #2	W6 x 15 #2	W6 x 16 #2S	W8 x 18 #2	W10 x 22 #2	W10 x 22 #2	W10 x 26 #2	W12 x 26 #2	W14 x 30 #2	W18 x 35 #3	W21 x 44 #3	W21 x 44 #3	-	-	-	-
	9 ft	-	-	W6 x 15 #2	W6 x 15 #2	W6 x 16 #2	W8 x 18 #2	W8 x 21 #2	W10 x 22 #2	W10 x 26 #2	W12 x 26 #2	W14 x 30 #2	W18 x 35 #3	W18 x 35 #3	W21 x 44 #3	-	-	-	-	-
	10 ft	-	-	W6 x 15 #2	W6 x 15 #1	W8 x 18 #2	W8 x 21 #2	W10 x 22 #2	W10 x 26 #2	W10 x 26 #2	W12 x 26 #2	W18 x 35 #3	W18 x 40 #3	W21 x 44 #3	-	-	-	-	-	-
	11 ft	-	-	W6 x 15 #1	W8 x 18 #2	W6 x 20 #1	W8 x 21 #1	W10 x 26 #2	W10 x 26 #2	W12 x 26 #2	W14 x 30 #2	W16 x 36 #2	W21 x 44 #3	-	-	-	-	-	-	-
	12 ft	-	-	W8 x 18 #2	W6 x 20 #1	W8 x 21 #1	W10 x 26 #2	W10 x 26 #2	W10 x 26 #1	W14 x 30 #2	W16 x 36 #2	W18 x 40 #2	W21 x 44 #3	-	-	-	-	-	-	-
	13 ft	-	-	W8 x 18 #1	W6 x 20 #1	W10 x 22 #2	W10 x 26 #2	W10 x 26 #1	W12 x 30 #2	W16 x 36 #2	W18 x 40 #2	W21 x 44 #2	-	-	-	-	-	-	-	-
	14 ft	-	-	W6 x 20 #1	W8 x 21 #1	W10 x 26 #1	W10 x 26 #1	W12 x 30 #2	W14 x 34 #2	W16 x 36 #2	-	-	-	-	-	-	-	-	-	-
	15 ft	-	-	W6 x 20 #1	W8 x 24 #1	W10 x 26 #1	W10 x 30 #1	W12 x 30 #1	W16 x 36 #2	-	-	-	-	-	-	-	-	-	-	-
	16 ft	-	-	W6 x 20 #1	W10 x 26 #1	W10 x 26 #1	W10 x 30 #1	W14 x 34 #2	-	-	-	-	-	-	-	-	-	-	-	-
20 ft	7 ft	-	-	W6 x 12 #2	W6 x 15 #2	W6 x 15 #2	W6 x 15 #2S	W8 x 18 #2S	W8 x 21 #2S	W10 x 22 #2	W10 x 22 #2	W12 x 26 #2	W14 x 30 #3	W16 x 31 #3	W18 x 35 #3	W21 x 44 #3	-	-	-	-
	8 ft	-	-	W6 x 15 #2	W6 x 15 #2	W6 x 15 #2	W8 x 18 #2	W8 x 21 #2S	W10 x 22 #2	W10 x 22 #2	W10 x 26 #2	W12 x 26 #2	W18 x 35 #3	W18 x 35 #3	W21 x 44 #3	-	-	-	-	-
	9 ft	-	-	W6 x 15 #2	W6 x 15 #2	W8 x 18 #2	W8 x 21 #2	W10 x 22 #2	W10 x 22 #2	W10 x 26 #2	W12 x 26 #2	W14 x 34 #2	W18 x 35 #3	W21 x 44 #3	-	-	-	-	-	-
	10 ft	-	-	W6 x 15 #2	W6 x 16 #1	W8 x 18 #2	W8 x 21 #2	W10 x 22 #2	W10 x 26 #2	W12 x 26 #2	W14 x 30 #2	W18 x 35 #3	W21 x 44 #3	W21 x 44 #3	-	-	-	-	-	-
	11 ft	-	-	W6 x 15 #1	W8 x 18 #2	W8 x 21 #2	W10 x 22 #2	W10 x 26 #2	W10 x 26 #2	W12 x 30 #2	W18 x 35 #2	W18 x 40 #2	W21 x 44 #3	-	-	-	-	-	-	-
	12 ft	-	-	W8 x 18 #2	W6 x 20 #1	W8 x 21 #1	W10 x 26 #2	W10 x 26 #2	W12 x 30 #2	W14 x 30 #2	W18 x 40 #2	W21 x 44 #3	-	-	-	-	-	-	-	-
	13 ft	-	-	W6 x 20 #1	W8 x 21 #1	W10 x 26 #2	W10 x 26 #2	W10 x 30 #1	W14 x 30 #2	W16 x 36 #2	W18 x 40 #2	W21 x 44 #2	-	-	-	-	-	-	-	-
	14 ft	-	-	W6 x 20 #1	W8 x 21 #1	W10 x 26 #1	W10 x 26 #1	W12 x 30 #2	W16 x 36 #2	W18 x 40 #2	-	-	-	-	-	-	-	-	-	-
	15 ft	-	-	W6 x 20 #1	W10 x 26 #1	W10 x 26 #1	W10 x 30 #1	W14 x 34 #2	W16 x 36 #2	-	-	-	-	-	-	-	-	-	-	-
	16 ft	-	-	W8 x 24 #1	W10 x 26 #1	W10 x 30 #1	W12 x 30 #1	W16 x 36 #2	-	-	-	-	-	-	-	-	-	-	-	-
21 ft	7 ft	-	-	W6 x 12 #2	W6 x 15 #2	W6 x 15 #2	W6 x 16 #2S	W8 x 18 #2S	W10 x 22 #2	W10 x 22 #2	W10 x 26 #2	W12 x 26 #2	W16 x 31 #3	W18 x 35 #3	W21 x 44 #3	-	-	-	-	-
	8 ft	-	-	W6 x 15 #2	W6 x 15 #2	W6 x 15 #2	W8 x 18 #2	W8 x 21 #2S	W10 x 22 #2	W10 x 26 #2	W12 x 26 #2	W14 x 30 #2	W18 x 35 #3	W21 x 44 #3	-	-	-	-	-	-
	9 ft	-	-	W6 x 15 #2	W6 x 15 #2	W8 x 18 #2	W8 x 21 #2	W10 x 22 #2	W10 x 26 #2	W12 x 26 #2	W14 x 30 #2	W18 x 35 #3	W18 x 35 #3	W21 x 44 #3	-	-	-	-	-	-
	10 ft	-	-	W6 x 15 #2	W8 x 18 #2	W6 x 20 #1	W10 x 22 #2	W10 x 26 #2	W10 x 26 #2	W12 x 26 #2	W14 x 30 #2	W18 x 35 #3	W21 x 44 #3	-	-	-	-	-	-	-
	11 ft	-	-	W6 x 15 #1	W8 x 18 #2	W8 x 21 #2	W10 x 22 #2	W10 x 26 #2	W10 x 26 #2	W12 x 26 #2	W16 x 40 #2	W21 x 44 #3	-	-	-	-	-	-	-	-
	12 ft	-	-	W8 x 18 #2	W6 x 20 #1	W10 x 22 #2	W10 x 26 #2	W10 x 26 #2	W14 x 30 #2	W16 x 36 #2	W18 x 40 #2	W21 x 44 #3	-	-	-	-	-	-	-	-
	13 ft	-	-	W6 x 20 #1	W8 x 21 #1	W10 x 26 #2	W10 x 26 #2	W12 x 30 #2	W14 x 34 #2	W18 x 40 #2	-	-	-	-	-	-	-	-	-	-
	14 ft	-	-	W6 x 20 #1	W10 x 26 #2	W10 x 26 #1	W10 x 30 #1	W14 x 34 #2	W16 x 36 #2	-	-	-	-	-	-	-	-	-	-	-
	15 ft	-	-	W8 x 21 #1	W10 x 26 #1	W10 x 26 #1	W12 x 30 #2	W16 x 36 #2	-	-	-	-	-	-	-	-	-	-	-	-
	16 ft	-	-	W8 x 24 #1	W10 x 26 #1	W10 x 30 #1	W14 x 34 #2	W16 x 36 #2	-	-	-	-	-	-	-	-	-	-	-	-
22 ft	7 ft	-	-	W6 x 12 #2	W6 x 15 #2	W6 x 15 #2	W8 x 18 #2	W8 x 18 #2S	W10 x 22 #2	W10 x 22 #2	W12 x 26 #3	W16 x 26 #3	W16 x 31 #3	W18 x 35 #3	W21 x 44 #3	-	-	-	-	-
	8 ft	-	-	W6 x 15 #2	W6 x 15 #2	W6 x 15 #2	W8 x 18 #2	W10 x 22 #2	W10 x 22 #2	W10 x 26 #2	W12 x 26 #2	W16 x 31 #3	W18 x 35 #3	W21 x 44 #3	-	-	-	-	-	-
	9 ft	-	-	W6 x 15 #2	W6 x 15 #2	W8 x 18 #2	W8 x 21 #2	W10 x 22 #2	W10 x 26 #2	W12 x 26 #2	W14 x 30 #2	W18 x 35 #3	W21 x 44 #3	-	-	-	-	-	-	-
	10 ft	-	-	W6 x 15 #2	W8 x 18 #2	W8 x 21 #2	W10 x 22 #2	W10 x 26 #2	W12 x 26 #2	W14 x 30 #2	W18 x 35 #3	W21 x 44 #3	-	-	-	-	-	-	-	-
	11 ft	-	-	W6 x 16 #1	W6 x 20 #1	W8 x 21 #2	W10 x 26 #2	W10 x 26 #2	W12 x 26 #2	W18 x 35 #3	W18 x 40 #3	W21 x 44 #3	-	-	-	-	-	-	-	-
	12 ft	-	-	W8 x 18 #2	W8 x 21 #2	W10 x 22 #2	W10 x 26 #2	W12 x 26 #2	W14 x 30 #2	W18 x 40 #2	W21 x 44 #3	-	-	-	-	-	-	-	-	-
	13 ft	-	-	W6 x 20 #1	W8 x 21 #1	W10 x 26 #2	W10 x 26 #1	W12 x 30 #2	W16 x 36 #2	W18 x 40 #2	-	-	-	-	-	-	-	-	-	-
	14 ft	-	-	W6 x 20 #1	W10 x 26 #2	W10 x 26 #1	W12 x 30 #2	W14 x 34 #2	W18 x 40 #2	-	-	-	-	-	-	-	-	-	-	-
	15 ft	-	-	W10 x 22 #1	W10 x 26 #1	W10 x 30 #1	W12 x 30 #2	W16 x 36 #2	-	-	-	-	-	-	-	-	-	-	-	-
	16 ft	-	-	W10 x 26 #1	W10 x 26 #1	W10 x 30 #1	W14 x 34 #2	-	-	-	-	-	-	-	-	-	-	-	-	-

REV.	DATE	REVISION DESCRIPTION	SHEET NO.

THE INFORMATION, INCLUDING ESTIMATED QUANTITIES OF WORK, SHOWN ON THESE SHEETS IS BASED ON LIMITED INVESTIGATIONS BY THE STATE AND IS IN NO WAY WARRANTED TO INDICATE THE CONDITIONS OF ACTUAL QUANTITIES OF WORK WHICH WILL BE REQUIRED.

Plotted Date: 6/19/2018

DESIGNER/DRAFTER: NJM

CHECKED BY: BKC

STATE OF CONNECTICUT
DEPARTMENT OF TRANSPORTATION

Filename: ..\170-3447_SB_Breakaway_Signpost_BSM4_PostSelectionTable_2.dgn

SIGNATURE/BLOCK: OFFICE OF ENGINEERING

APPROVED BY:

PROJECT TITLE: STATEWIDE REPLACEMENT OF OVERHEAD SIGN SUPPORTS ON VARIOUS ROUTES

TOWN: VARIOUS

DRAWING TITLE: POST SELECTION TABLE 2 (W > 15 FT.)

PROJECT NO. 170-3447

DRAWING NO. BSM-04

SHEET NO. 01.07.04

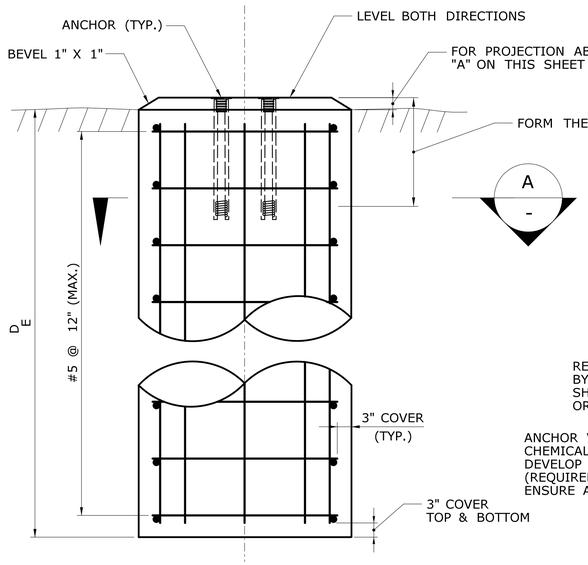

TYPICAL SECTION
SIGN SUPPORT FOUNDATION IN EARTH

SCALE: $\frac{3}{4}$" = 1'-0"

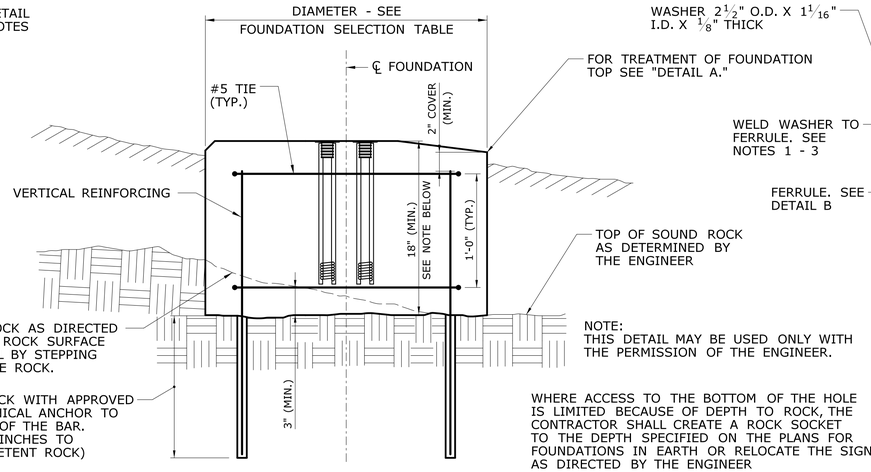

NOTE:
THIS DETAIL MAY BE USED ONLY WITH THE PERMISSION OF THE ENGINEER.

WHERE ACCESS TO THE BOTTOM OF THE HOLE IS LIMITED BECAUSE OF DEPTH TO ROCK, THE CONTRACTOR SHALL CREATE A ROCK SOCKET TO THE DEPTH SPECIFIED ON THE PLANS FOR FOUNDATIONS IN EARTH OR RELOCATE THE SIGN AS DIRECTED BY THE ENGINEER

TYPICAL SECTION SIGN
SUPPORT FOUNDATION IN ROCK

SCALE: $1\frac{1}{2}$" = 1'-0"

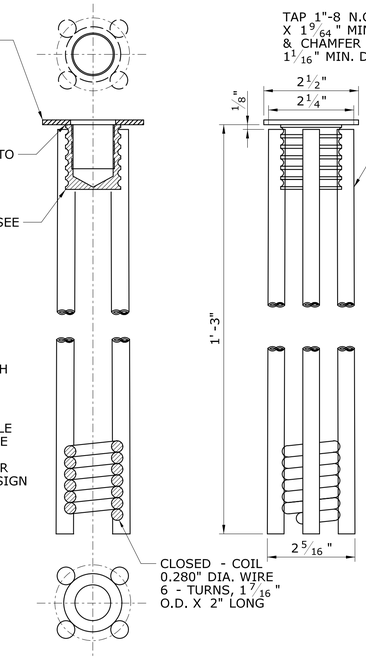

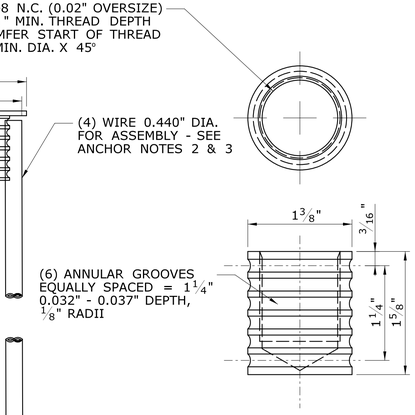

DETAIL B

ANCHOR NOTES:

1. FILLET WELD WASHER TO FERRULE AT 4 PLACES 90° APART.
   WELD MUST NOT PENETRATE THROUGH THE WASHER. WASHER MUST BE PERPENDICULAR TO THE FERRULE CENTER LINE.
2. WIRES (4) TO BE PERCUSSION WELDED TO FERRULE AND TO THE CLOSED COIL.
3. WELD MUST NOT PENETRATE TO FERRULE INTERIOR THREADS.
4. WIRE TO BE DRAWN PER ASTM A510.
5. CHEMICAL & PHYSICAL CERTIFICATION SHOULD ACCOMPANY THE MATERIAL.
6. CERTIFICATION SHOULD EXPLICITLY INDICATE THE MATERIAL TO BE DOMESTIC.
7. TOLERANCES ON DECIMAL DIMENSIONS SHALL BE ± 0.004". ALL OTHER TOLERANCES SHALL BE ± 0.04", EXCEPT AS NOTED.

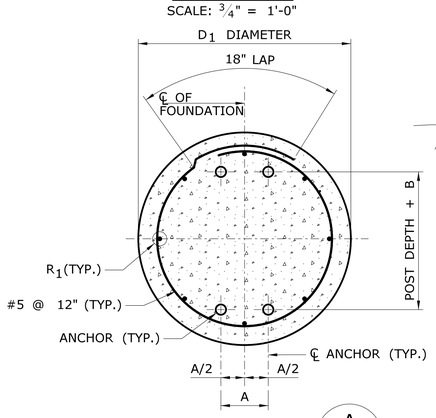

SECTION
DRILLED FOUNDATION

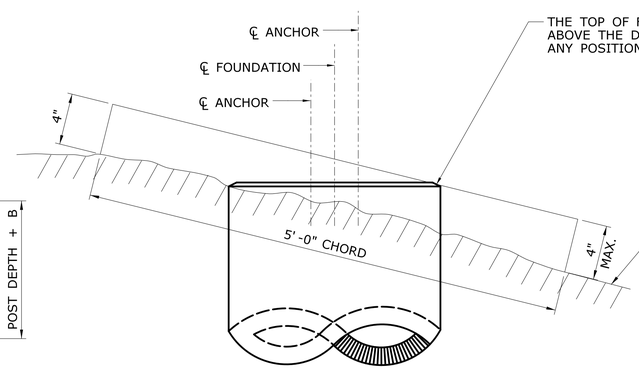

STANDARD FOUNDATION TOP

THE TOP OF FOUNDATION SHALL NOT PROJECT ABOVE THE DASHED LINE WHEN THE LINE IS IN ANY POSITION STRADDLING THE FOUNDATION

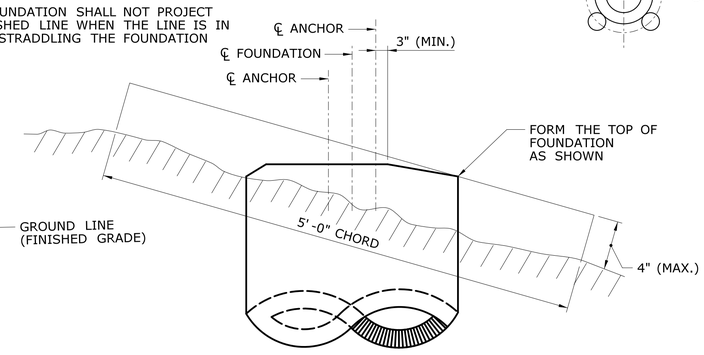

MODIFIED FOUNDATION TOP
(SEE FOUNDATION NOTE 3)

DETAIL A - PROJECTION OF FOUNDATION ABOVE GROUND

FOUNDATION NOTES

1. DETAIL A ILLUSTRATES THE METHOD USED TO MEASURE THE PROJECTION OF THE FOUNDATION ABOVE FINISHED GRADE. IT IS IMPORTANT THAT THE TOP OF THE FOUNDATION BE PLACED IN ACCORDANCE WITH THIS DETAIL.
2. THE TOP OF FOUNDATION SHALL BE CONSTRUCTED AS CLOSE TO THE FINISHED GRADE AS POSSIBLE, BUT SHOULD NOT BE COVERED BY SOIL.
3. USE A MODIFIED TOP WHERE PROJECTION LIMITS CANNOT BE MET WITH THE STANDARD TOP.
4. FOUNDATIONS SHALL BE PLACED AGAINST UNDISTURBED SOIL. WHERE ROCK IS ENCOUNTERED, THE CONTRACTOR MAY USE THE "SIGN SUPPORT FOUNDATION IN ROCK" DETAIL SHOWN ON THIS SHEET WITH THE PERMISSION OF THE ENGINEER.
5. IF UNSUITABLE SOIL IS ENCOUNTERED DURING EXCAVATION, THE ENGINEER SHALL BE NOTIFIED. AN ALTERNATE FOUNDATION DESIGN MAY BE SUPPLIED BY THE ENGINEER, OR THE SIGN MAY BE RELOCATED.
6. PLACEMENT OF FOUNDATIONS SHALL BE IN ACCORDANCE WITH "SIGN SUPPORT PLACEMENT DETAILS" ON THIS SHEET.
7. WHERE FOUNDATIONS ARE PLACED ON SLOPES STEEPER THAN 1V : 6H, GRADE AROUND THE FOUNDATIONS IN CONFORMANCE WITH DETAIL A.

SELECTING A FOUNDATION:

ENTER THE "FOUNDATION SELECTION TABLE" WITH THE POST SIZE AND BRACKET NO. SELECTED FROM THE "POST SELECTION TABLE 1 OR 2" ON DWG BSM-3 OR DWG BSM-4. READ HORIZONTALLY ACROSS THE TABLE THE CORRESPONDING VALUES OF FOUNDATION DIAMETER, EMBEDMENT DEPTH, REINFORCING BAR SIZE, ANCHOR SPACING AND DIMENSION "B".

FOUNDATION SELECTION TABLE FOR BREAKAWAY SIGNS

POST SIZE	DIAMETER D_I (FT.)	DEPTH D_E (FT.)	REINF. STEEL R_I	ANCHOR SPACING A (IN.)	B (IN.) BRACKET NO. 1	B (IN.) BRACKET NO. 2	B (IN.) BRACKET NO. 3
W6 W8	2.5	8	8 - #5	3	$7\frac{15}{16}$	$8\frac{1}{16}$	$8\frac{1}{8}$
W10 W12	2.5	8	8 - #5	4	$7\frac{15}{16}$	$8\frac{1}{16}$	$8\frac{1}{8}$
W14 W16 W18 W21	3.25	8	8 - #6	4	$7\frac{15}{16}$	$8\frac{1}{16}$	$8\frac{1}{8}$

ERECTION NOTE:

FOR MAXIMUM EFFECTIVENESS, POSITION SIDE MOUNTED SIGNS AS FOLLOWS:

A. FOR SIGNS LOCATED LESS THAN 30 FT. FROM THE ROAD ON TANGENT SECTION, POSITION THE SIGN SUCH THAT THE VERTICAL AXIS IS PLUMB AND THE HORIZONTAL AXIS IS AT AN ANGLE OF 90° WITH THE TRAFFIC LANE WHICH THE SIGN SERVES.

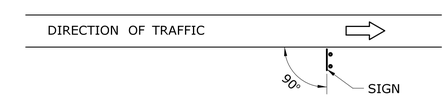

B. FOR SIGNS LOCATED 30 FT. OR MORE FROM THE ROAD ON TANGENT SECTION, THE SIGNS SHALL BE TURNED APPROXIMATELY 3° TOWARD THE ROAD (SEE DIAGRAM).

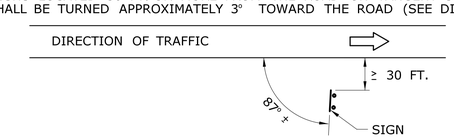

C. WHERE THE SIGN IS POSITIONED ON THE OUTSIDE OR INSIDE OF THE HORIZONTAL CURVE, THE SIGN FACE SHOULD BE ORIENTED 90° TO THE STRAIGHT LINE BETWEEN THE SIGN AND THE POINT FROM WHICH THE SIGN IS TO BE READ AT THE DISTANCE SHOWN.

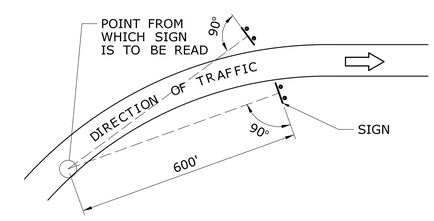

SIGN SUPPORT PLACEMENT DETAILS

REV.	DATE	REVISION DESCRIPTION	SHEET NO.

THE INFORMATION, INCLUDING ESTIMATED QUANTITIES OF WORK, SHOWN ON THESE SHEETS IS BASED ON LIMITED INVESTIGATIONS BY THE STATE AND IS IN NO WAY WARRANTED TO INDICATE THE CONDITIONS OF ACTUAL QUANTITIES OF WORK WHICH WILL BE REQUIRED.

Plotted Date: 6/19/2018

DESIGNER/DRAFTER: NJM
CHECKED BY: BKC
SCALE AS NOTED

STATE OF CONNECTICUT
DEPARTMENT OF TRANSPORTATION

Filename: ...\170-3447_SB_Breakaway_Signpost_BSM5_FoundationDet.dgn

SIGNATURE/BLOCK: OFFICE OF ENGINEERING
APPROVED BY: Mary E. Bach

PROJECT TITLE: STATEWIDE REPLACEMENT OF OVERHEAD SIGN SUPPORTS ON VARIOUS ROUTES

TOWN: VARIOUS

DRAWING TITLE: FOUNDATION DETAILS

PROJECT NO. 170-3447
DRAWING NO. BSM-05
SHEET NO. 01.07.05

TABLE 1 - BRACKET DATA

POST SIZE	BRACKET TYPE	BRACKET WEIGHT (LBS)	DIMENSIONS (IN.)			HOLE DIAMETERS (IN.)			DIMENSIONS (IN.)				
									E BRACKET NO.			F	G
			A	B	C	D1	D2	D3	1	2	3		
W6, W8	B525	$7\frac{5}{8}$	$5\frac{1}{4}$	$1\frac{1}{8}$	$1\frac{1}{2}$	$\frac{17}{32}$	$\frac{7}{16}$	$\frac{1}{2}$" -13 UNC 1A	0.100	0.150	0.200	$1\frac{7}{8}$	$\frac{1}{2}$
ALL OTHERS	B650	$9\frac{1}{2}$	$6\frac{1}{2}$	$1\frac{1}{8}$	2	$\frac{21}{32}$	$\frac{17}{32}$	$\frac{5}{8}$"-11 UNC 1A	0.100	0.150	0.200	$2\frac{7}{8}$	$\frac{1}{2}$

TABLE 2 - BRACKET BOLTS

POST SIZE	BRACKET TYPE	BOLT AND CAP SCREW DIAMETER	BOLT LENGTH			CAP SCREW LENGTH	THREAD DESIGNATION (U.S. CUSTOMARY UNITS)	
			TOP	MIDDLE	BOTTOM		BOLT	CAP SCREW
W6, W8	B525	$\frac{1}{2}$	$2\frac{1}{2}$	$2\frac{3}{4}$	3	$1\frac{1}{4}$	13 UNC	13 UNC
ALL OTHERS	B650	$\frac{5}{8}$	$2\frac{3}{4}$	3	$3\frac{1}{4}$	$1\frac{1}{4}$	11 UNC	11 UNC

SHIM AS REQUIRED WITH MANUFACTURER SUPPLIED SHIMS (4 LOCATIONS). NO MORE THAN TWO SHIMS UNDERNEATH ANY ONE COUPLING AND NO MORE THAN THREE SHIMS UNDERNEATH ANY TWO COUPLINGS.

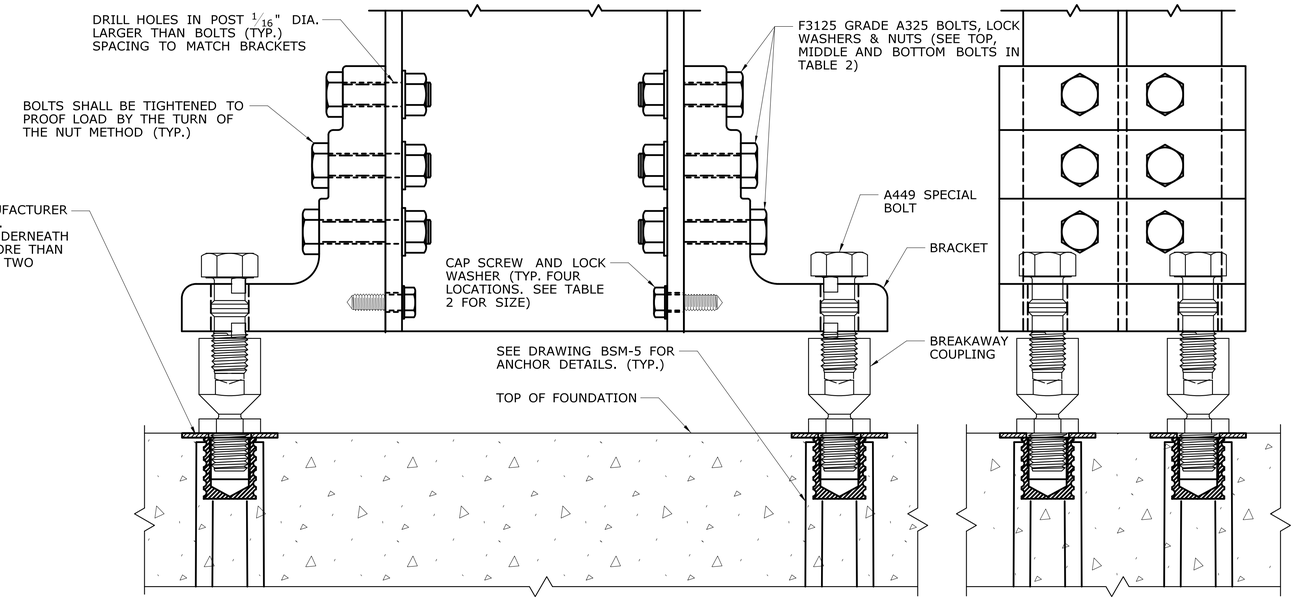

SIDE ELEVATION

FRONT ELEVATION

BRACKET ASSEMBLY DETAILS

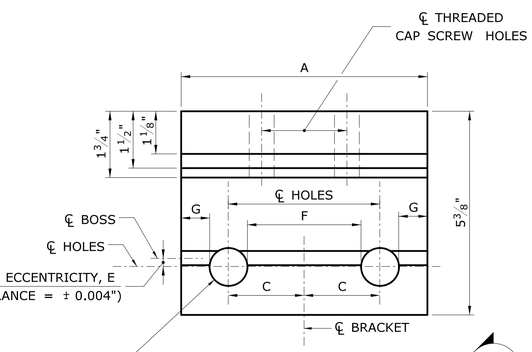

PLAN

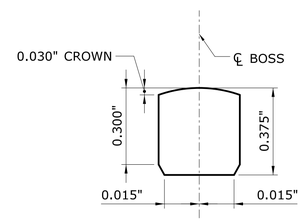

BOSS DETAIL

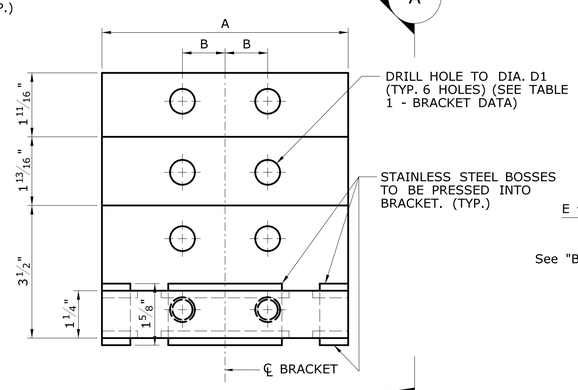

ELEVATION

A

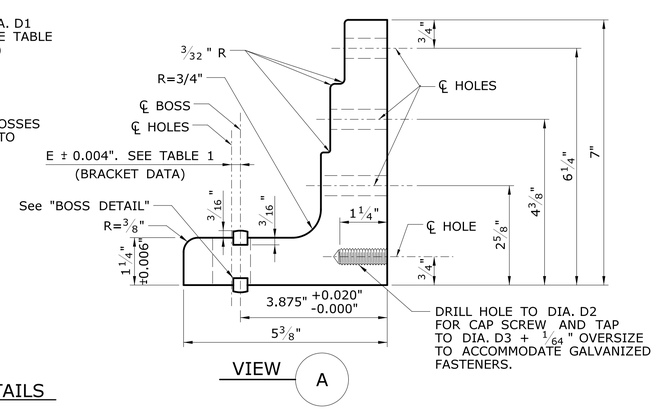

VIEW A

BRACKET DETAILS

HALF SCALE

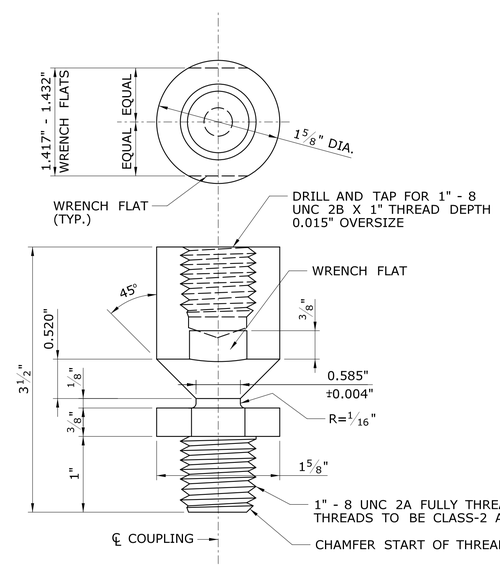

NOTE:
TOLERANCES TO $\frac{1}{32}$" EXCEPT AS NOTED

BREAKAWAY COUPLING

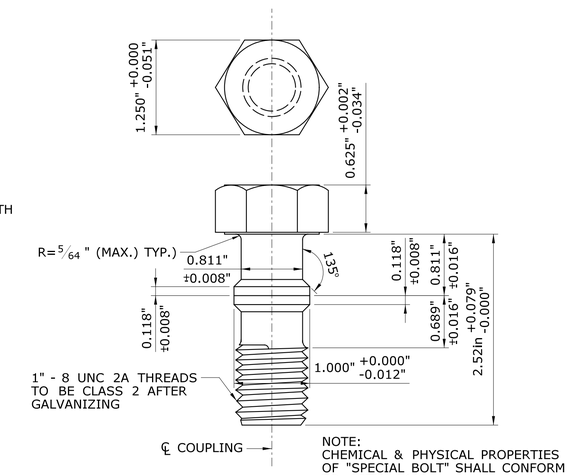

NOTE:
CHEMICAL & PHYSICAL PROPERTIES OF "SPECIAL BOLT" SHALL CONFORM TO ASTM A449.

SPECIAL BOLT

REV.	DATE	REVISION DESCRIPTION	SHEET NO.

THE INFORMATION, INCLUDING ESTIMATED QUANTITIES OF WORK, SHOWN ON THESE SHEETS IS BASED ON LIMITED INVESTIGATIONS BY THE STATE AND IS IN NO WAY WARRANTED TO INDICATE THE CONDITIONS OF ACTUAL QUANTITIES OF WORK WHICH WILL BE REQUIRED.

Plotted Date: 6/19/2018

DESIGNER/DRAFTER: NJM

CHECKED BY: BKC

SCALE AS NOTED

STATE OF CONNECTICUT
DEPARTMENT OF TRANSPORTATION

Filename: ...\170-3447_SB_Breakaway_Signpost_BSM6_BracketDet.dgn

SIGNATURE/BLOCK: OFFICE OF ENGINEERING

APPROVED BY: Mary E. Baker

PROJECT TITLE: STATEWIDE REPLACEMENT OF OVERHEAD SIGN SUPPORTS ON VARIOUS ROUTES

TOWN: VARIOUS

DRAWING TITLE: BRACKET DETAILS

PROJECT NO. 170-3447

DRAWING NO. BSM-06

SHEET NO. 01.07.06

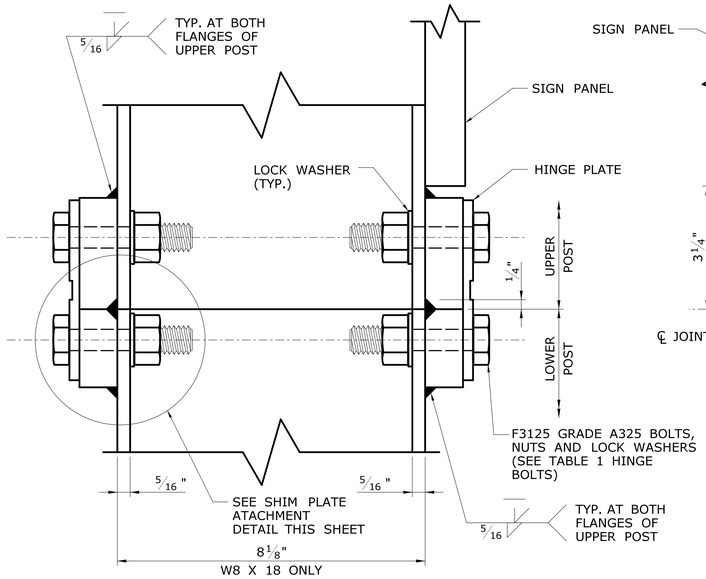

SIDE ELEVATION

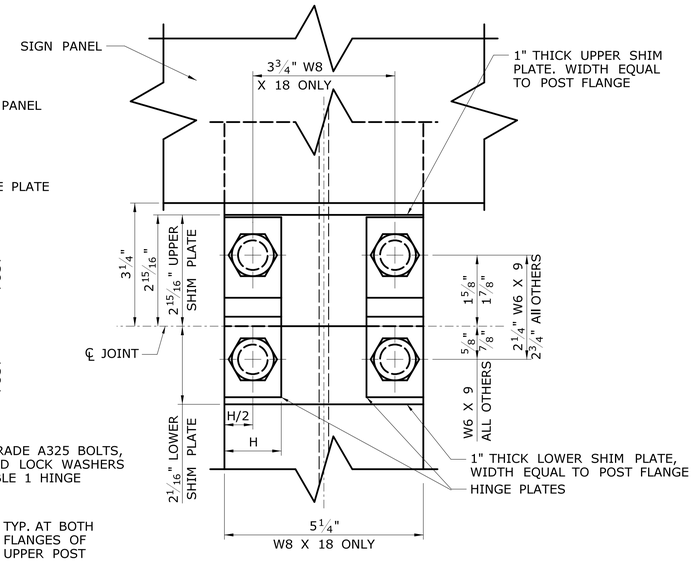

FRONT ELEVATION

WITH SHIM PLATE

SCALE: 1/2 (W8 X 18)

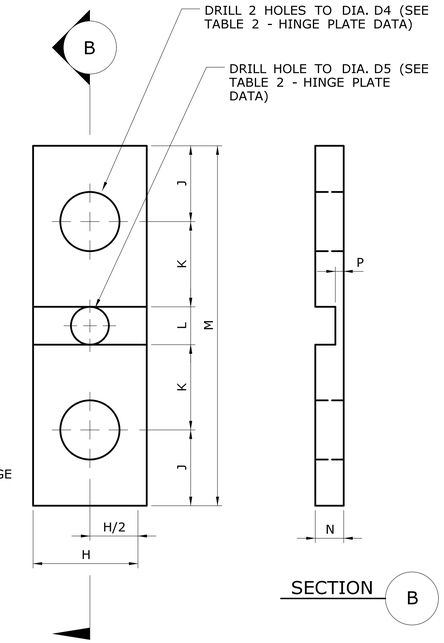

SECTION

HINGE PLATE DETAILS

SCALE: FULL

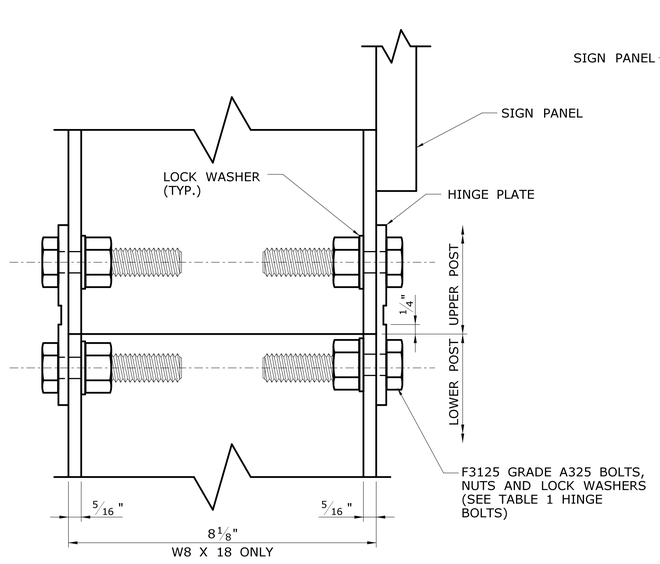

SIDE ELEVATION

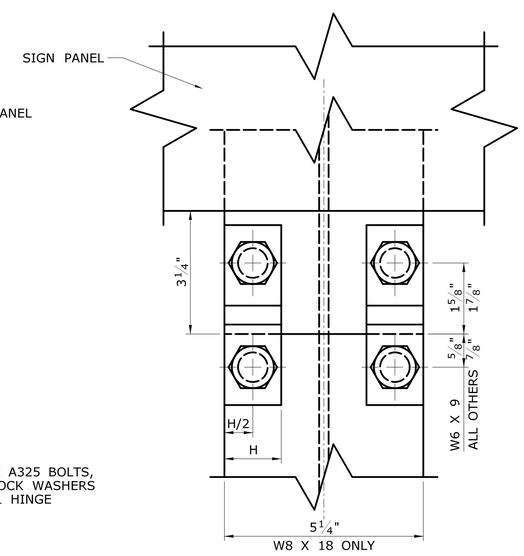

FRONT ELEVATION

WITHOUT SHIM PLATE

SCALE: 1/2 (W8 X 18)

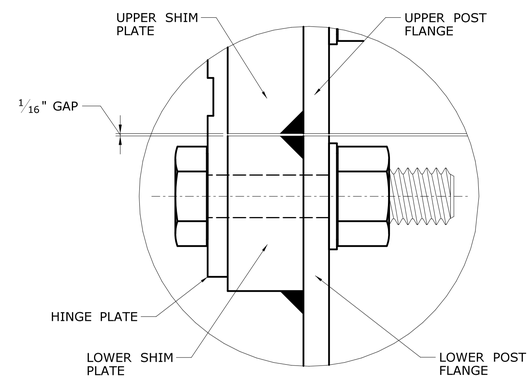

SHIM PLATE ATTACHMENT DETAILS

TABLE 2 - HINGE PLATE DATA

POST SIZE	PLATE NO.	DIMENSIONS (IN.)							HOLE DIA. (IN.)	
		H	J	K	L	M	N	P	D4	D5
W6 X 9	1	1	3/4	7/8	1/2	3 3/4	15/64	0.071 ± 0.004	17/32	NONE
W6* AND W8	2	1 1/2	1	1 1/8	1/2	4 3/4	3/8	0.113 ± 0.004	25/32	1/2
ALL OTHERS	3	1 1/2	1	1 1/8	1/2	4 3/4	3/8	0.113 ± 0.004	25/32	NONE

* EXCLUDING W6 X 9

GENERAL NOTES

SPECIFICATIONS: CONNECTICUT DEPARTMENT OF TRANSPORTATION FORM 817 (2016), SUPPLEMENTAL SPECIFICATION DATED JANUARY 2018, AND SPECIAL PROVISIONS.
DESIGN SPECIFICATIONS: AASHTO STANDARD SPECIFICATIONS FOR HIGHWAY BRIDGES 17TH EDITION DATED 2002, AND AASHTO STANDARD SPECIFICATIONS FOR STRUCTURAL SUPPORTS FOR HIGHWAY SIGNS, LUMINAIRES AND TRAFFIC SIGNALS (2013).
DESIGN LOADS: THE DESIGN WIND SPEED IS 100 MPH, BASED ON A 10-YEAR MEAN RECURRENCE INTERVAL.
MATERIALS:

FOUNDATIONS: CONCRETE FOR FOUNDATIONS SHALL BE CLASS "A" CONCRETE.

REINFORCEMENT: REINFORCING STEEL SHALL CONFORM TO THE REQUIREMENTS OF ASTM A615, GRADE 60.
SIGN POSTS: STEEL FOR SIGN POSTS SHALL CONFORM TO THE REQUIREMENTS OF ASTM A709, GRADE 36, AND SHALL BE HOT DIP GALVANIZED AFTER FABRICATION IN ACCORDANCE WITH ASTM A123. THE POST SHALL BE PERMANENTLY LABELED WITH THE POST SIZE ON THE WEB AT THE BOTTOM OF THE LOWER POST.
ANCHORS: THREADED FERRULES SHALL BE FABRICATED FROM TYPE 304 STAINLESS STEEL. RODS SHALL BE FABRICATED FROM STEEL CONFORMING TO AISI 1038. STEEL COILS SHALL CONFORM TO THE REQUIREMENTS OF AISI 1008. MINIMUM TENSILE STRENGTH OF 60,000 LBS.
SHIMS: 1" HORSESHOE SHIMS SHALL BE FABRICATED FROM 14 OR 18 GAUGE SHEET STEEL.

BREAKAWAY COUPLINGS: BREAKAWAY COUPLINGS SHALL BE MADE FROM ALLOY STEEL CONFORMING TO AMS 6378D WITH EXCEPTIONS TO DECARBURIZATION AND MACROSTRUCTURE CLAUSES OR AN EQUIVALENT MATERIAL, AND SHALL HAVE A MINIMUM TENSILE YIELD STRENGTH OF 130,000 PSI. THE COUPLING SHALL HAVE A MINIMUM TENSILE ULTIMATE STRENGTH OF 40,400 LBS. THE ROCKWELL HARDNESS SHALL BE C32 MINIMUM. COUPLINGS SHALL BE HOT DIP GALVANIZED IN ACCORDANCE WITH ASTM F2329, CLEANED AND PHOSPHATED PER FEDERAL SPECIFICATION TT-C-490C, COATED, 0.002" - 0.004" THICK, USING MORTON POWDER COATINGS' 20-7037 BLACK POLYESTER POWDER OR EQUIVALENT.
CHIPPED AREAS OF THE COATED SURFACE SHALL BE REPAIRED. ALL THREADED SURFACES, AFTER COATING, SHALL BE CLEANED TO ALLOW THEM TO FUNCTION PROPERLY.

BRACKETS: BRACKETS SHALL BE MADE FROM ALUMINUM ALLOY 6061-T6 OR AN EQUIVALENT MATERIAL. THE LOAD CONCENTRATING MEMBER (BOSS) SHALL BE MADE FROM STAINLESS STEEL CONFORMING TO ASTM A582, TYPE 416 WITH ROCKWELL HARDNESS OF C33 - C45. LOCATION HOLES FOR THE BREAKAWAY COUPLING SHALL BE ACCURATELY POSITIONED RELATIVE TO THE LOAD CONCENTRATING MEMBER AND BRACKETS SHALL BE PERMANENTLY LABELED WITH THE BRACKET NUMBER TO REFLECT THE HOLE POSITIONING. SEE DWG. NO. BSM-6 FOR IDENTIFICATION OF BRACKETS BY NUMBER.

HINGE PLATES: HINGE PLATES SHALL BE MADE FROM ALLOY STEEL CONFORMING TO AISI 4130 OR AN EQUIVALENT MATERIAL AND SHALL BE GALVANIZED AFTER FABRICATION IN ACCORDANCE WITH ASTM A123. THE HINGE PLATE SHALL HAVE A MINIMUM TENSILE YIELD STRENGTH OF 90,000 PSI AND MINIMUM TENSILE ULTIMATE STRENGTH AS FOLLOWS:

HI-1 7,100 LBS
HI-2 11,300 LBS
HI-3 17,000 LBS

BOLTS, NUTS AND WASHERS: UNLESS NOTED OTHERWISE, ALL BOLTS SHALL CONFORM TO THE REQUIREMENTS OF ASTM F3125 GRADE A325. SPECIAL BOLTS SHALL CONFORM TO ASTM A449. NUTS SHALL CONFORM TO THE REQUIREMENTS OF ASTM A563, GRADE DH. LOCKWASHERS SHALL CONFORM TO THE REQUIREMENTS OF ANSI B18-21-1. BOLTS, NUTS AND WASHERS SHALL BE GALVANIZED IN ACCORDANCE WITH THE REQUIREMENTS OF ASTM F2329. SPECIAL BOLTS MAY BE MECHANICALLY GALVANIZED IN ACCORDANCE WITH THE REQUIREMENTS OF ASTM B695, CLASS 55.

CAP SCREWS: CAP SCREWS ATTACHING BRACKETS TO POSTS SHALL CONFORM TO THE REQUIREMENTS OF ASTM A307 AND SHALL BE HOT DIP GALVANIZED IN ACCORDANCE WITH ASTM F2329.

BREAKAWAY HARDWARE: BREAKAWAY HARDWARE SHALL BE SUPPLIED AS COMPONENTS OF A CRASH-TESTED SYSTEM COMPLYING WITH THE GUIDELINES OF NCHRP REPORT 350 (RECOMMENDED PROCEDURES FOR THE SAFETY PERFORMANCE EVALUATION OF HIGHWAY FEATURES). THE MANUFACTURER SHALL SUBMIT TEST REPORTS TO FHWA FOR APPROVAL.

CERTIFICATION: THE CONTRACTOR SHALL PROVIDE A MATERIALS CERTIFICATE TO CERTIFY THAT THE MATERIAL AND COMPONENTS CONFORM TO THOSE SHOWN ON THE PLANS AND SPECIFICATIONS.

CHANGES: NO CHANGE IN DESIGN MATERIALS OR DETAIL ALTERATIONS WILL BE PERMITTED WITHOUT PRIOR APPROVAL BY THE ENGINEER.

INSTALLATION: INSTALLATION OF THE BREAKAWAY ASSEMBLY SHALL BE IN ACCORDANCE WITH THE RECOMMENDED PRACTICES OF THE SUPPLIER.

BASIS OF PAYMENT: THE COST OF FURNISHING AND INSTALLING THE BREAKAWAY HINGE PLATE ASSEMBLY WILL BE INCLUDED IN THE PAY ITEM "STRUCTURAL STEEL." THE COST OF FURNISHING AND INSTALLING THE BREAKAWAY COUPLING SYSTEM, CONSISTING OF BRACKET, BREAKAWAY COUPLINGS, SPECIAL BOLTS, AND SHIMS WILL BE INCLUDED IN THE PAY ITEM "SIDE MOUNTED SIGN FOUNDATION." THE COST OF FURNISHING AND INSTALLING FOUNDATIONS, INCLUDING EXCAVATING, CLASS "A" CONCRETE, REINFORCING STEEL AND ANCHOR FERRULES, WILL BE INCLUDED IN THE PAY ITEM "SIDE MOUNTED SIGN FOUNDATION."

TABLE 1 - HINGE BOLTS

POST SIZE	HINGE ASSEMBLY		THREAD DESIGNATION (U.S. CUSTOMARY UNITS)
	BOLT DIAMETER	BOLT LENGTH	
W6 x 9	1/2	1 1/2	13 UNC
ALL OTHERS	3/4	2 1/4	10 UNC

REV.	DATE	REVISION DESCRIPTION	SHEET NO.

THE INFORMATION, INCLUDING ESTIMATED QUANTITIES OF WORK, SHOWN ON THESE SHEETS IS BASED ON LIMITED INVESTIGATIONS BY THE STATE AND IS IN NO WAY WARRANTED TO INDICATE THE CONDITIONS OF ACTUAL QUANTITIES OF WORK WHICH WILL BE REQUIRED.

Plotted Date: 6/19/2018

DESIGNER/DRAFTER: NJM
CHECKED BY: BKC
SCALE AS NOTED

STATE OF CONNECTICUT
DEPARTMENT OF TRANSPORTATION

Filename: ...\170-3447_SB_Breakaway_Signpost_BSM7_HingeDet.dgn

SIGNATURE/BLOCK: OFFICE OF ENGINEERING
APPROVED BY: Mary E. Bach

PROJECT TITLE: STATEWIDE REPLACEMENT OF OVERHEAD SIGN SUPPORTS ON VARIOUS ROUTES

TOWN: VARIOUS

DRAWING TITLE: HINGE DETAILS

PROJECT NO. 170-3447
DRAWING NO. BSM-07
SHEET NO. 01.07.07