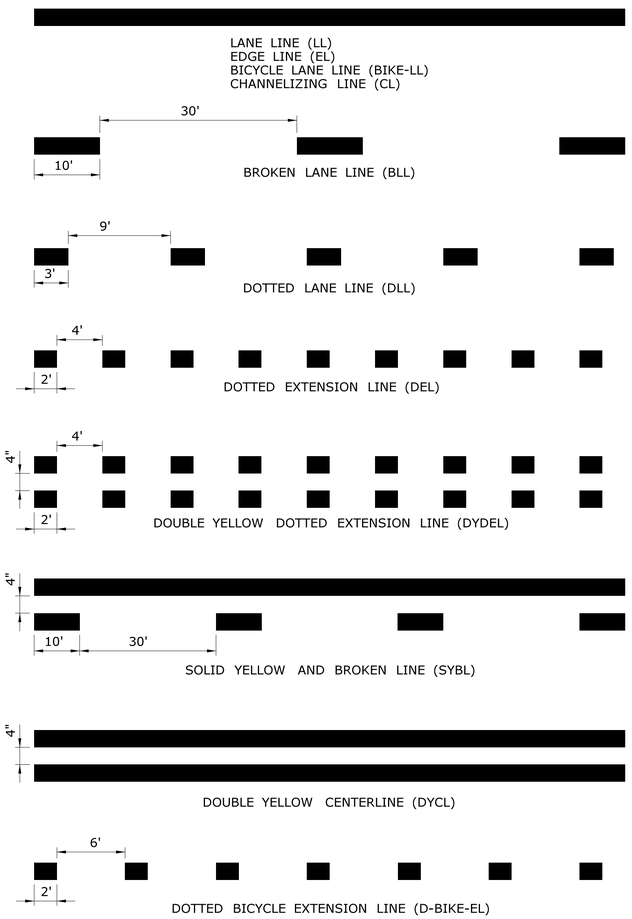

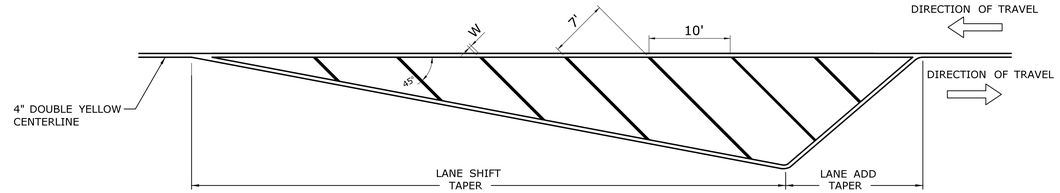

CROSS HATCHED ISLAND DETAIL
(YELLOW)

W IS TO BE 6" WHEN POSTED SPEED ≤ 45 MPH
W IS TO BE 12" WHEN POSTED SPEED > 45 MPH
CROSS HATCHED ISLANDS ARE TO BE INSTALLED WHERE CALLED FOR ON THE PLANS

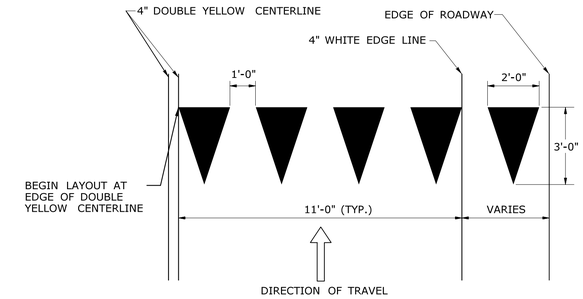

YIELD LINE DETAIL
(WHITE)

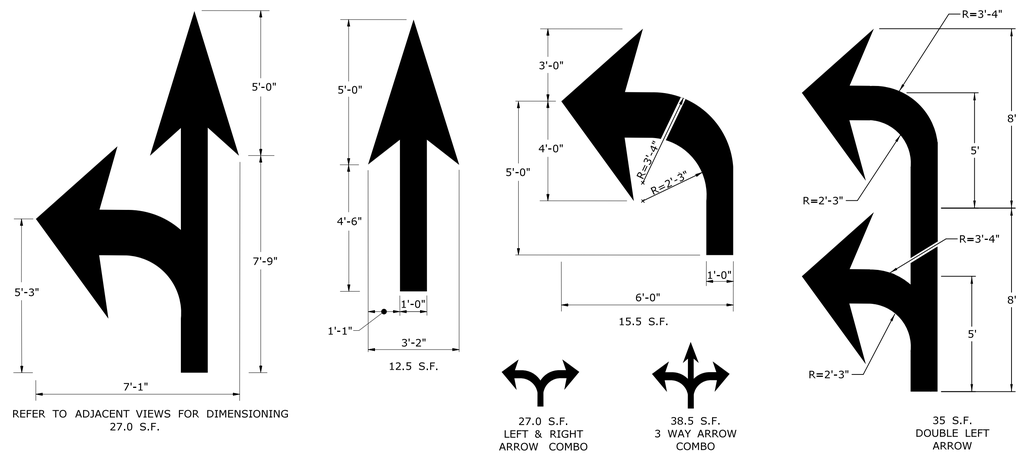

PAVEMENT ARROW DETAILS
(WHITE)
ARROWS SHALL BE CENTERED IN TRAVEL LANE

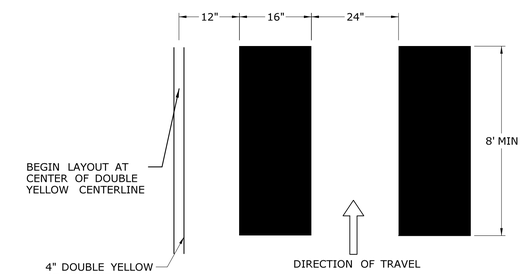

CROSSWALK DETAIL
(WHITE)

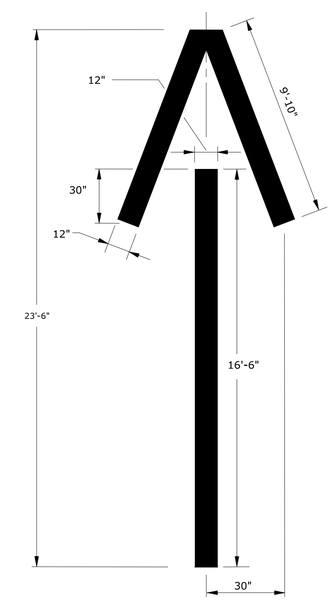

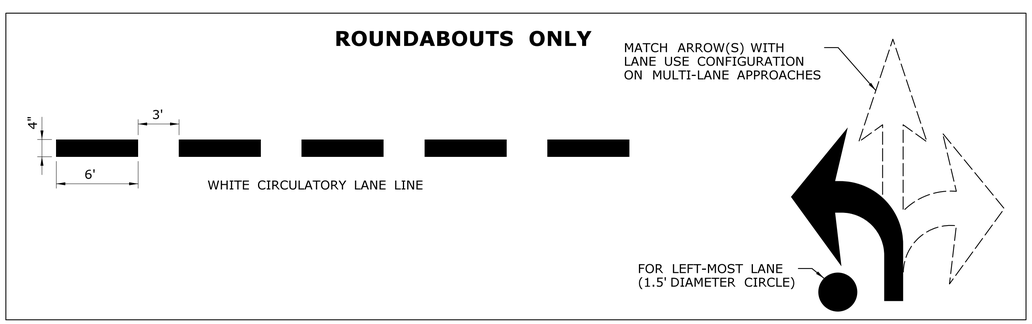

NOTES :

1. AREA OF PAVEMENT MARKINGS AS INDICATED IS APPROXIMATE.
2. RIGHT TURN PAVEMENT MARKING ARROWS ARE MIRROR IMAGE OF LEFT TURN PAVEMENT MARKING ARROWS.

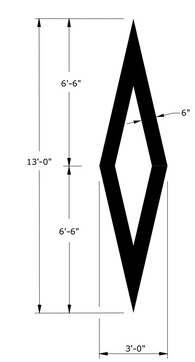

WHITE PREFERENTIAL LANE SYMBOL
13.0 S.F.

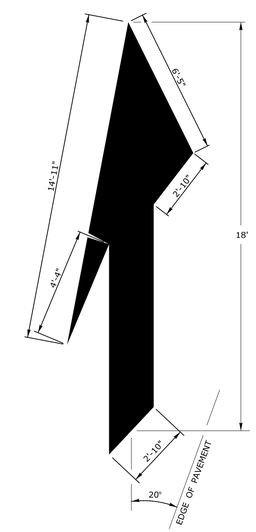

WHITE LANE REDUCTION ARROW
41.8 S.F.

WHITE WRONG WAY PAVEMENT ARROW
36.2 S.F.

REV.	DATE	REVISION DESCRIPTION

THE INFORMATION, INCLUDING ESTIMATED QUANTITIES OF WORK, SHOWN ON THESE SHEETS IS BASED ON LIMITED INVESTIGATIONS BY THE STATE AND IS IN NO WAY WARRANTED TO INDICATE THE CONDITIONS OF ACTUAL QUANTITIES OF WORK WHICH WILL BE REQUIRED.

Plotted Date: 4/3/2017

NOT TO SCALE

STATE OF CONNECTICUT
DEPARTMENT OF TRANSPORTATION

Filename: TR-1210_04.dgn Model: CT_Civil_2D_Sheet

SUBMITTED BY: NAME/DATE/TIME:
Mark F. Makuch, P.E.
2017.04.19 11:11:04-04'00'

APPROVED BY: NAME/DATE/TIME:
Gregory M. Dorosh, P.E.
2017.04.20 13:16:12-04'00'

CTDOT
STANDARD SHEET

OFFICE OF ENGINEERING

STANDARD SHEET TITLE:
PAVEMENT MARKING LINES AND SYMBOLS

STANDARD SHEET NO.:
TR-1210_04