03.04 - BRIDGE NO. 09223R
INDEX OF DRAWINGS

DRAWING NUMBER	DRAWING TITLE	DRAWING NUMBER	DRAWING TITLE
S4-0	INDEX OF DRAWINGS	S4-20	EXISTING BORING INFORMATION
S4-1	SITE PLAN - 1		
S4-2	SITE PLAN - 2		
S4-3	GENERAL PLAN AND ELEVATION		
S4-4	NOTES, QUANTITIES, AND SECTIONS		
S4-5	LAYOUT PLAN AND TRACK PROFILE		
S4-6	BORING LOGS - 1		
S4-7	BORING LOGS - 2		
S4-8	STAGE CONSTRUCTION - 1		
S4-9	STAGE CONSTRUCTION - 2		
S4-10	DRAINAGE DETAILS CONSTRUCTION DETAILS		
S4-11	PILE LAYOUT		
S4-12	ABUTMENTS 1 & 2		
S4-13	ABUTMENTS 1 & 2-2		
S4-14	FRAMING PLAN		
S4-15	GIRDER DETAILS - 1		
S4-16	GIRDER DETAILS - 2		
S4-17	GIRDER DETAILS - 3		
S4-18	GIRDER DETAILS - 4		
S4-19	BEARINGS & BEARING DETAILS		

DESIGNED BY:

LOCHNER
H.W. LOCHNER, INC
55 Hartland Street, Suite 401
East Hartford, CT 06108

STATE OF CONNECTICUT
RICHARD A. BRAY
LICENSED PROFESSIONAL ENGINEER

Richard Arthur Bray
2018.07.25
16:57:13 -04'00'

VOLUME 3 SUBSETS

SUBSET NO.	SUBSET TITLE	SUBSET SHEET COUNT
01	BRIDGE NO. 09200R	13
02	BRIDGE NO. 09204R	13
03	BRIDGE NO. 09206R	13
04	BRIDGE NO. 09223R	21

REV.	DATE	REVISION DESCRIPTION	SHEET NO.
-	-	-	-
-	-	-	-
-	-	-	-
-	-	-	-
-	-	-	-
-	-	-	-

THE INFORMATION, INCLUDING ESTIMATED QUANTITIES OF WORK, SHOWN ON THESE SHEETS IS BASED ON LIMITED INVESTIGATIONS BY THE STATE AND IS IN NO WAY WARRANTED TO INDICATE THE CONDITIONS OF ACTUAL QUANTITIES OF WORK WHICH WILL BE REQUIRED.

PLOTTED: 7/25/2018

DESIGNER/DRAFTER: BC/CR
CHECKED BY: RB

STATE OF CONNECTICUT
DEPARTMENT OF TRANSPORTATION

FILENAME: ...\SB_MSH_170_3192_MP_44.50_INDEX.dgn

LOCHNER
H.W. LOCHNER, INC
55 Hartland St
East Hartford, CT 06108

APPROVED BY: R. BRAY
DATE: 12/06/17

STATE OF CONNECTICUT
RICHARD A. BRAY
LICENSED PROFESSIONAL ENGINEER

PROJECT TITLE:
BRIDGE NO. 09223R HOUSATONIC RAILROAD MP 44.50 OVER THE HOLLENBECK RIVER

TOWN: **CANAAN**

DRAWING TITLE: **INDEX OF DRAWINGS**

PROJECT NO. **170-3192**
DRAWING NO. **S4-0**
SHEET NO. **03.04.01**

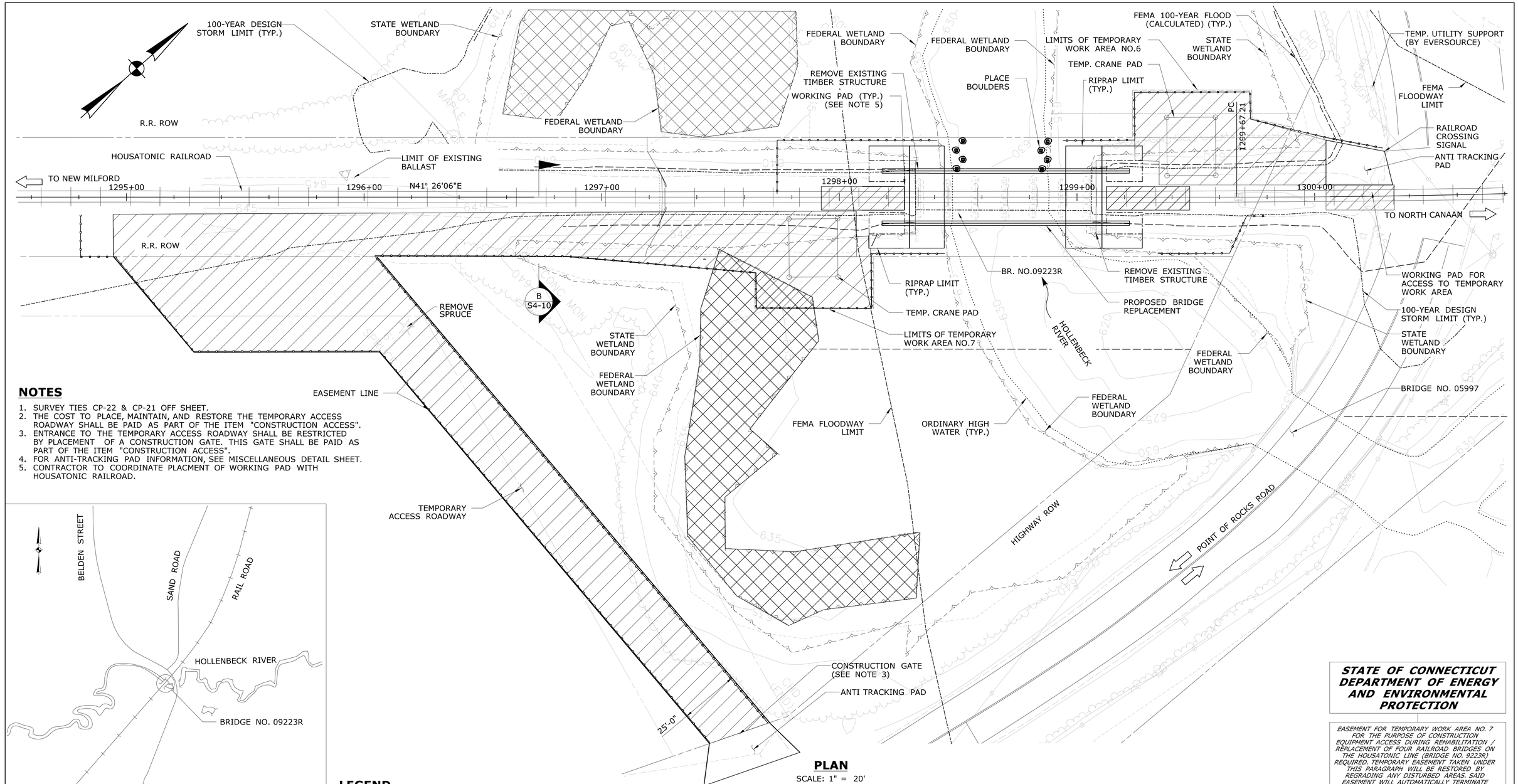

NOTES

1. SURVEY TIES CP-22 & CP-21 OFF SHEET.
2. THE COST TO PLACE, MAINTAIN, AND RESTORE THE TEMPORARY ACCESS ROADWAY SHALL BE PAID AS PART OF THE ITEM "CONSTRUCTION ACCESS".
3. ENTRANCE TO THE TEMPORARY ACCESS ROADWAY SHALL BE RESTRICTED BY PLACEMENT OF A CONSTRUCTION GATE. THIS GATE SHALL BE PAID AS PART OF THE ITEM "CONSTRUCTION ACCESS".
4. FOR ANTI-TRACKING PAD INFORMATION, SEE MISCELLANEOUS DETAIL SHEET.
5. CONTRACTOR TO COORDINATE PLACMENT OF WORKING PAD WITH HOUSATONIC RAILROAD.

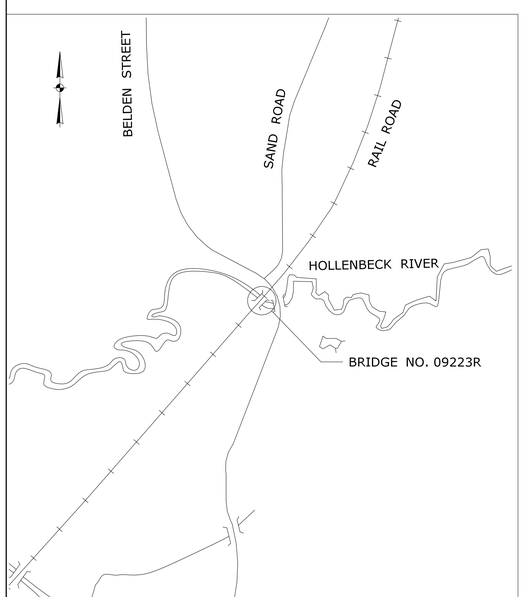

LOCATION PLAN - SITE NO.4

NTS

LEGEND

- SEDIMENTATION CONTROL SYSTEM
- CONSTRUCTION ACCESS
- VERNAL POOLS

PLAN

SCALE: 1" = 20'

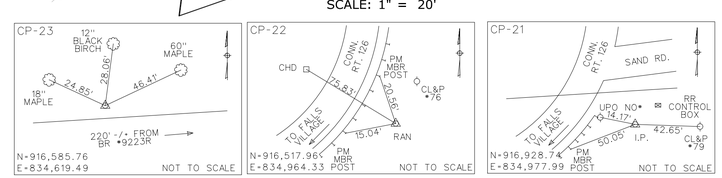

SURVEY TIES

NTS

STATE OF CONNECTICUT DEPARTMENT OF ENERGY AND ENVIRONMENTAL PROTECTION

EASEMENT FOR TEMPORARY WORK AREA NO. 7 FOR THE PURPOSE OF CONSTRUCTION EQUIPMENT ACCESS DURING REHABILITATION / REPLACEMENT OF FOUR RAILROAD BRIDGES ON THE HOUSATONIC LINE (BRIDGE NO. 9223R) REQUIRED. TEMPORARY EASEMENT TAKEN UNDER THIS PARAGRAPH WILL BE RESTORED BY REGRADING ANY DISTURBED AREAS. SAID EASEMENT WILL AUTOMATICALLY TERMINATE UPON COMPLETION OF THE PROJECT, UNLESS SOONER RELEASED BY THE DEPARTMENT OF TRANSPORTATION.

WORK AREA = 120 ± SQ. FT.

DAVID DUNCAN

CONSTRUCTION EASEMENT FOR THE PURPOSE OF TRANSPORTING EQUIPMENT AND MATERIALS TO AND FROM RAILROAD RIGHT OF WAY DURING REHABILITATION / REPLACEMENT OF FOUR RAILROAD BRIDGES ON THE HOUSATONIC LINE (BRIDGE NO. 9223R) REQUIRED. SAID EASEMENT IS LIMITED TO TRAVEL ONLY AND IS NOT TO BE USED FOR STORAGE OF MATERIALS OR EQUIPMENT. CONSTRUCTION EASEMENT TAKEN UNDER THIS PARAGRAPH WILL BE RESTORED BY REGRADING ANY DISTURBED AREAS. SAID EASEMENT WILL BE EXTINGUISHED UPON COMPLETION OF THE PROJECT, UNLESS SOONER EXTINGUISHED BY THE STATE. EASEMENT AREA = 9,700 ± SQ. FT.

EASEMENT FOR TEMPORARY WORK AREA NO. 6 FOR THE PURPOSE OF CONSTRUCTION EQUIPMENT ACCESS DURING REHABILITATION / REPLACEMENT OF FOUR RAILROAD BRIDGES ON THE HOUSATONIC LINE (BRIDGE NO. 9223R) REQUIRED. TEMPORARY EASEMENT TAKEN UNDER THIS PARAGRAPH WILL BE RESTORED BY REGRADING ANY DISTURBED AREAS. SAID EASEMENT WILL AUTOMATICALLY TERMINATE UPON COMPLETION OF THE PROJECT, UNLESS SOONER RELEASED BY THE DEPARTMENT OF TRANSPORTATION.

WORK AREA = 218 ± SQ. FT.

REV.	DATE	REVISION DESCRIPTION	SHEET NO.
-	-	-	-
-	-	-	-
-	-	-	-
-	-	-	-
-	-	-	-
-	-	-	-

THE INFORMATION, INCLUDING ESTIMATED QUANTITIES OF WORK, SHOWN ON THESE SHEETS IS BASED ON LIMITED INVESTIGATIONS BY THE STATE AND IS IN NO WAY WARRANTED TO INDICATE THE CONDITIONS OF ACTUAL QUANTITIES OF WORK WHICH WILL BE REQUIRED.

PLOTTED: 7/25/2018

DESIGNER/DRAFTER: BC/CR

CHECKED BY: RB

SCALE AS NOTED

STATE OF CONNECTICUT DEPARTMENT OF TRANSPORTATION

FILENAME: ...\SB_MSH_170_3192_MP_44.50_S-001.dgn

LOCHNER
H.W. LOCHNER, INC
55 Hartland St
East Hartford, CT 06108

APPROVED BY: R. BRAY DATE: 12/06/17

STATE OF CONNECTICUT RICHARD A. BRAY LICENSED PROFESSIONAL ENGINEER

PROJECT TITLE:

BRIDGE NO. 09223R HOUSATONIC RAILROAD MP 44.50 OVER THE HOLLENBECK RIVER

TOWN: **CANAAN**

DRAWING TITLE: **SITE PLAN - 1**

PROJECT NO. **170-3192**

DRAWING NO. **S4-1**

SHEET NO. **03.04.02**

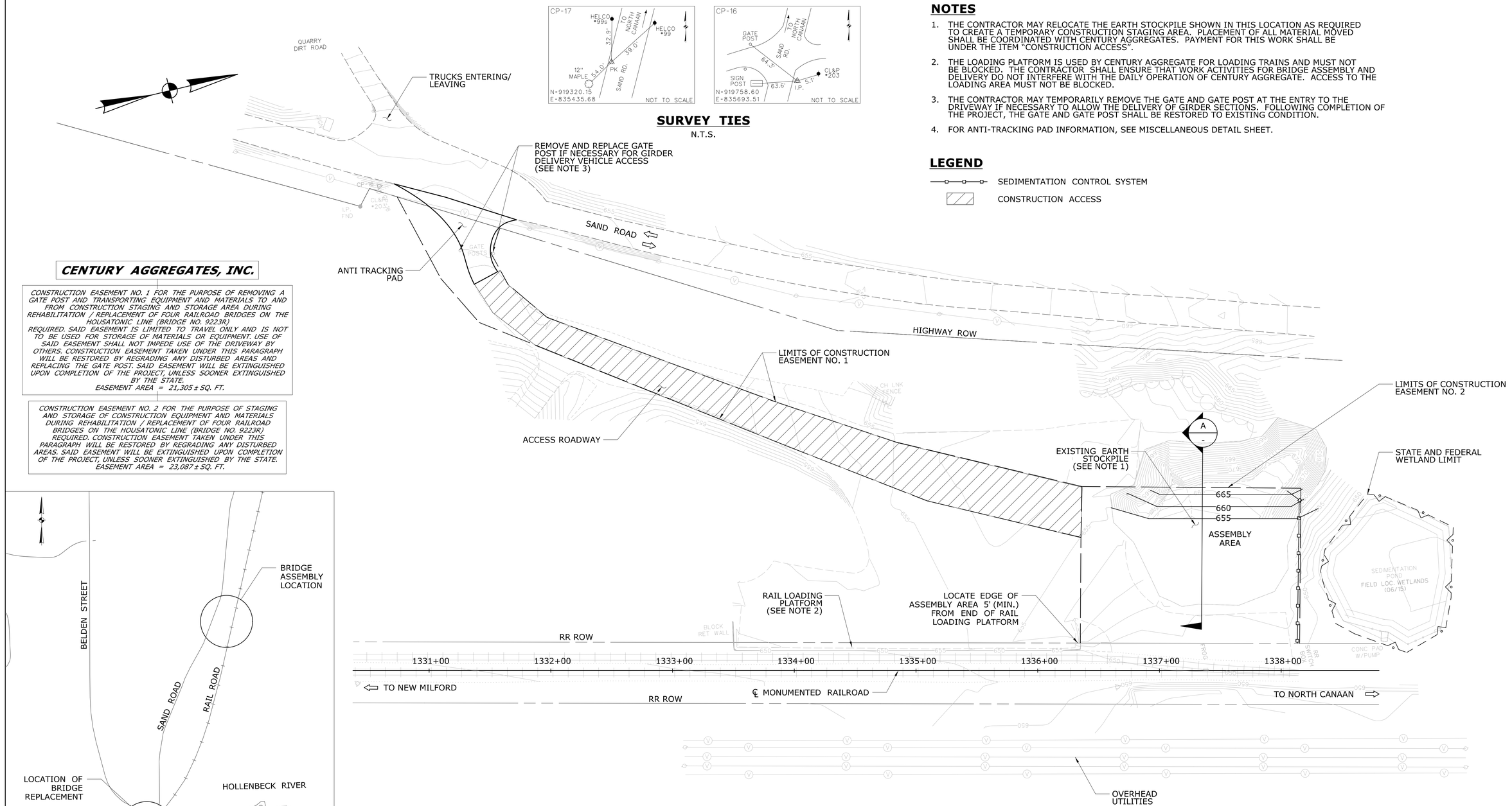

SURVEY TIES

N.T.S.

NOTES

1. THE CONTRACTOR MAY RELOCATE THE EARTH STOCKPILE SHOWN IN THIS LOCATION AS REQUIRED TO CREATE A TEMPORARY CONSTRUCTION STAGING AREA. PLACEMENT OF ALL MATERIAL MOVED SHALL BE COORDINATED WITH CENTURY AGGREGATES. PAYMENT FOR THIS WORK SHALL BE UNDER THE ITEM "CONSTRUCTION ACCESS".
2. THE LOADING PLATFORM IS USED BY CENTURY AGGREGATE FOR LOADING TRAINS AND MUST NOT BE BLOCKED. THE CONTRACTOR SHALL ENSURE THAT WORK ACTIVITIES FOR BRIDGE ASSEMBLY AND DELIVERY DO NOT INTERFERE WITH THE DAILY OPERATION OF CENTURY AGGREGATE. ACCESS TO THE LOADING AREA MUST NOT BE BLOCKED.
3. THE CONTRACTOR MAY TEMPORARILY REMOVE THE GATE AND GATE POST AT THE ENTRY TO THE DRIVEWAY IF NECESSARY TO ALLOW THE DELIVERY OF GIRDER SECTIONS. FOLLOWING COMPLETION OF THE PROJECT, THE GATE AND GATE POST SHALL BE RESTORED TO EXISTING CONDITION.
4. FOR ANTI-TRACKING PAD INFORMATION, SEE MISCELLANEOUS DETAIL SHEET.

LEGEND

SEDIMENTATION CONTROL SYSTEM

CONSTRUCTION ACCESS

PLAN

SCALE: 1" = 40'

CENTURY AGGREGATES, INC.

CONSTRUCTION EASEMENT NO. 1 FOR THE PURPOSE OF REMOVING A GATE POST AND TRANSPORTING EQUIPMENT AND MATERIALS TO AND FROM CONSTRUCTION STAGING AND STORAGE AREA DURING REHABILITATION / REPLACEMENT OF FOUR RAILROAD BRIDGES ON THE HOUSATONIC LINE (BRIDGE NO. 9223R) REQUIRED. SAID EASEMENT IS LIMITED TO TRAVEL ONLY AND IS NOT TO BE USED FOR STORAGE OF MATERIALS OR EQUIPMENT. USE OF SAID EASEMENT SHALL NOT IMPEDE USE OF THE DRIVEWAY BY OTHERS. CONSTRUCTION EASEMENT TAKEN UNDER THIS PARAGRAPH WILL BE RESTORED BY REGRADING ANY DISTURBED AREAS AND REPLACING THE GATE POST. SAID EASEMENT WILL BE EXTINGUISHED UPON COMPLETION OF THE PROJECT, UNLESS SOONER EXTINGUISHED BY THE STATE.
EASEMENT AREA = 21,305 ± SQ. FT.

CONSTRUCTION EASEMENT NO. 2 FOR THE PURPOSE OF STAGING AND STORAGE OF CONSTRUCTION EQUIPMENT AND MATERIALS DURING REHABILITATION / REPLACEMENT OF FOUR RAILROAD BRIDGES ON THE HOUSATONIC LINE (BRIDGE NO. 9223R) REQUIRED. CONSTRUCTION EASEMENT TAKEN UNDER THIS PARAGRAPH WILL BE RESTORED BY REGRADING ANY DISTURBED AREAS. SAID EASEMENT WILL BE EXTINGUISHED UPON COMPLETION OF THE PROJECT, UNLESS SOONER EXTINGUISHED BY THE STATE.
EASEMENT AREA = 23,087 ± SQ. FT.

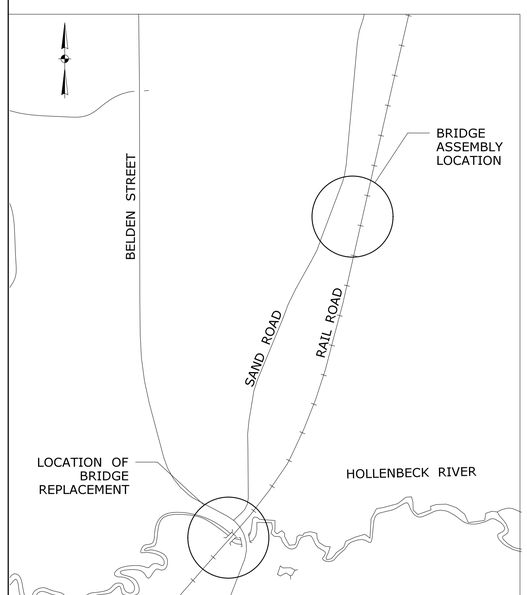

LOCATION PLAN - SITE NO.4

NTS

REV.	DATE	REVISION DESCRIPTION	SHEET NO.
-	-	-	-
-	-	-	-
-	-	-	-
-	-	-	-
-	-	-	-
-	-	-	-

THE INFORMATION, INCLUDING ESTIMATED QUANTITIES OF WORK, SHOWN ON THESE SHEETS IS BASED ON LIMITED INVESTIGATIONS BY THE STATE AND IS IN NO WAY WARRANTED TO INDICATE THE CONDITIONS OF ACTUAL QUANTITIES OF WORK WHICH WILL BE REQUIRED.

PLOTTED: 7/25/2018

DESIGNER/DRAFTER: BC/CR
CHECKED BY: RB
SCALE AS NOTED

STATE OF CONNECTICUT
DEPARTMENT OF TRANSPORTATION

FILENAME: ...\SB_MSH_170_3192_MP_44.50_S-002.dgn

LOCHNER
H.W. LOCHNER, INC
55 Hartland St
East Hartford, CT 06108

APPROVED BY: R. BRAY DATE: 12/06/17

STATE OF CONNECTICUT RICHARD A. BRAY LICENSED PROFESSIONAL ENGINEER

PROJECT TITLE:
BRIDGE NO. 09223R HOUSATONIC RAILROAD MP 44.50 OVER THE HOLLENBECK RIVER

TOWN: **CANAAN**

DRAWING TITLE: **SITE PLAN - 2**

PROJECT NO. **170-3192**
DRAWING NO. **S4-2**
SHEET NO. **03.04.03**

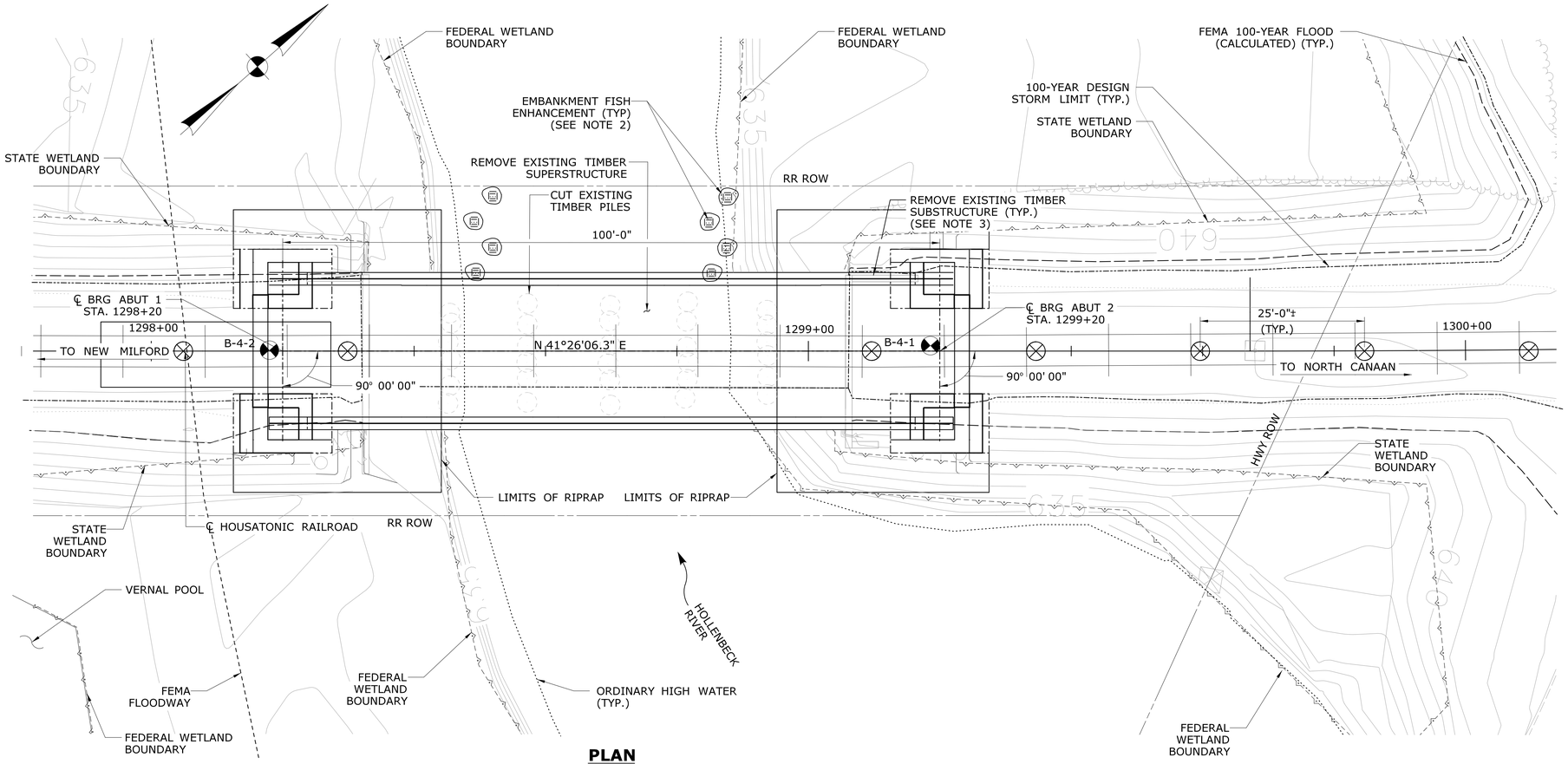

PLAN

SCALE: 1"= 10'

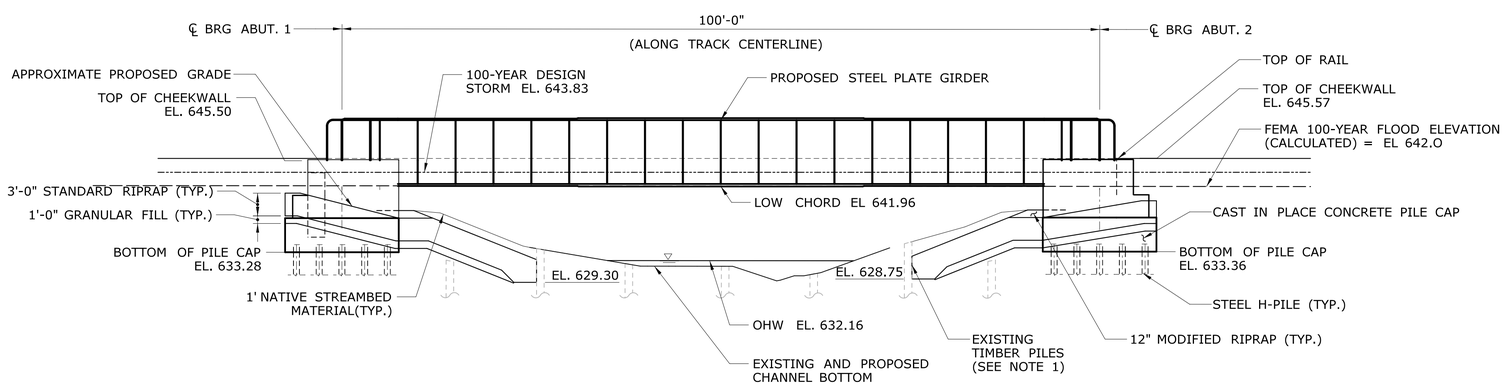

ELEVATION

SCALE: 1"= 10'

HYDRAULIC DATA

DRAINAGE AREA	42.7 SQ MI
DESIGN FREQUENCY	100 YR
DESIGN DISCHARGE	5760 CFS
AVERAGE DAILY FLOW ELEVATION	632.16 ESTIMATED
UPSTREAM DESIGN WATER SURFACE ELEVATION	643.83
DOWNSTREAM DESIGN WATER SURFACE ELEVATION	642.25
MAXIMUM SCOUR ELEVATION	625.3
FREQUENCY	INCIPIENT (200-YR)
DISCHARGE	7000 - CFS
WORST CASE SCOUR SUB-STRUCTURE UNIT	ABUTMENT 1

NOTICE TO BRIDGE INSPECTORS

THE DEPARTMENT'S BRIDGE SAFETY PROCEDURES REQUIRE THIS BRIDGE TO BE INSPECTED FOR, BUT NOT LIMITED TO, ALL APPLICABLE COMPONENTS INDICATED IN THE GOVERNING MANUALS FOR BRIDGE INSPECTION. ATTENTION MUST BE GIVEN TO INSPECTING THE FOLLOWING SPECIAL COMPONENTS AND DETAILS. (THE LISTING OF COMPONENTS FOR SPECIFIC ATTENTION SHALL NOT BE CONSTRUED TO REDUCE THE IMPORTANCE OF INSPECTION OF ANY OTHER COMPONENT OF THE STRUCTURE). THE FREQUENCY OF INSPECTION OF THIS STRUCTURE SHALL BE IN ACCORDANCE WITH THE GOVERNING MANUALS FOR BRIDGE INSPECTION, UNLESS OTHERWISE DIRECTED BY THE MANAGER OF BRIDGE SAFETY AND EVALUATION.

COMPONENT OR DETAIL	STRUCTURE SHEET REFERENCE
FRACTURE CRITICAL MEMBER	S4-14

TRANSPORTATION DIMENSIONS AND WEIGHT DATA

MEMBER	SHIPPING LENGTH	SHIPPING HEIGHT	SHIPPING WIDTH	SHIPPING WEIGHT
G-1 (TYP.)	104'-0"	8'-11"	1'-11"	77 300 LB
PRECAST CONC.BACKWALL	17'-0"	2'-3"	8'-6"	48 800 LB

CONCRETE DISTRIBUTION

SUPERSTRUCTURE	C.Y.	0
SUBSTRUCTURE	C.Y.	60
FOOTINGS	C.Y.	90
TOTAL	C.Y	150

INSPECTION OF FIELD WELDS

METHOD	UNIT	QUANTITY
ULTRASONIC	INCH	0
MAGNETIC PARTICLE	FEET	0

NOTES

1. THE CONTRACTOR SHALL CUT EXISTING TIMBER PILES OFF AT THE EXISTING GRADE. THE COST TO CUT THESE PILES SHALL BE INCLUDED UNDER THE ITEM "REMOVAL OF EXISTING TIMBER PILES"
2. THE CONTRACTOR SHALL PLACE BOULDERS AT BOTH DOWNSTREAM CORNERS OF THE BRIDGE ABUTMENTS AS SHOWN ON THE PLANS. PLACEMENT OF BOULDERS SHALL BE UNDER THE DIRECTION OF A DEEP FISHERIES BIOLOGIST OR OEP SCIENTIST. THIS WORK SHALL BE PAID UNDER THE ITEM "PLACEMENT OF CHANNEL BOULDER"
3. THE COST TO REMOVE EXISTING EARTH RETAINING TIMBERS AT THE ABUTMENTS SHALL BE INCIDENTAL TO THE ITEMS "STRUCTURE EXCAVATION - EARTH (EXCLUDING COFFERDAM AND DEWATERING)" AND "EARTH EXCAVATION".
4. ADDITIONAL BORINGS WERE PERFORMED BY OTHERS IN 1934. FOR BORING LOGS, SEE DWG. "EXISTING BORING INFORMATION"

ABBREVIATIONS

AS	AS SHOWN
HRR	HOUSATONIC RAILROAD
MP	MILE POST
P/C	PRECAST
ROW	RIGHT OF WAY
RR	RAILROAD
TYP	TYPICAL
WP	WORKING POINT

LEGEND

B-4-X — LOCATION OF BORING PERFORMED BY GEODESIGN, INC. OF MIDDLEBURY, CT BETWEEN 03/10/14 AND 03/14/14 FOR BORING LOGS, SEE DWG. "BORING LOGS - 1" AND "BORING LOGS - 2"

SETTLEMENT MONITORING POINT

REV.	DATE	REVISION DESCRIPTION	SHEET NO.
-	-	-	-
-	-	-	-
-	-	-	-
-	-	-	-
-	-	-	-
-	-	-	-

THE INFORMATION, INCLUDING ESTIMATED QUANTITIES OF WORK, SHOWN ON THESE SHEETS IS BASED ON LIMITED INVESTIGATIONS BY THE STATE AND IS IN NO WAY WARRANTED TO INDICATE THE CONDITIONS OF ACTUAL QUANTITIES OF WORK WHICH WILL BE REQUIRED.

PLOTTED: 7/25/2018

DESIGNER/DRAFTER: BC/CR
CHECKED BY: RB
SCALE AS NOTED

STATE OF CONNECTICUT
DEPARTMENT OF TRANSPORTATION

FILENAME: ...\SB_MSH_170_3192_MP_44.50_S-003.dgn

LOCHNER
H.W. LOCHNER, INC
55 Hartland St
East Hartford, CT 06108

APPROVED BY: R. BRAY
DATE: 12/06/17

STATE OF CONNECTICUT RICHARD A. BRAY LICENSED PROFESSIONAL ENGINEER

PROJECT TITLE:
BRIDGE NO. 09223R HOUSATONIC RAILROAD MP 44.50 OVER THE HOLLENBECK RIVER

TOWN: **CANAAN**

DRAWING TITLE: **GENERAL PLAN AND ELEVATION**

PROJECT NO. **170-3192**
DRAWING NO. **S4-3**
SHEET NO. **03.04.04**

GENERAL NOTES

SPECIFICATIONS:
CONNECTICUT DEPARTMENT OF TRANSPORTATION FORM 817, DATED 2016, SUPPLEMENTAL SPECIFICATIONS, DATED JANUARY 2018, AND SPECIAL PROVISIONS.

DESIGN SPECIFICATIONS:
AMERICAN RAILWAY ENGINEERING AND MAINTENANCE OF WAY ASSOCIATION (AREMA) MANUAL FOR RAILWAY ENGINEERING, 2016, AS SUPPLEMENTED BY THE AASHTO LRFD BRIDGE DESIGN SPECIFICATIONS (7TH EDITION), AND BY THE CONNECTICUT DEPARTMENT OF TRANSPORTATION BRIDGE DESIGN MANUAL (2003 WITH REVISIONS UP TO AND INCLUDING 2011).

ALLOWABLE DESIGN STRESSES:

CLASS "A" CONCRETE	BASED ON f'c = 3000 psi
CLASS "F" CONCRETE	BASED ON f'c = 4000 psi
PRECAST CONCRETE	BASED ON f'c = 5000 psi

REINFORCEMENT	ASTM A615 GRADE 60	fy = 60 000 PSI
STRUCTURAL STEEL	AASHTO M270, ASTM A709, GRADE 50	fy = 50 000 PSI

THE SPECIFIED CONCRETE STRENGTH USED IN DESIGN, f'c, OF THE CONCRETE COMPONENTS IS NOTED ABOVE. THE MINIMUM COMPRESSIVE STRENGTH OF THE CONCRETE IN THE CONSTRUCTED COMPONENTS SHALL CONFORM TO THE REQUIREMENTS OF THE SPECIAL PROVISION "SECTION 6.01 CONCRETE FOR STRUCTURES"

LIVE LOAD:
TRACK - COOPER E-80 AND ALT. LIVE LOAD.

STRUCTURAL STEEL:
SEE STRUCTURAL STEEL NOTES FOR DESIGNATIONS AND REQUIREMENTS

PAINT:
NO PAINTING OF STRUCTURAL STEEL IS REQUIRED. STEEL SURFACES ARE TO BE PREPARED FOR WEATHERING IN ACCORDANCE WITH THE SPECIFICATIONS.

ELEVATIONS:
ALL ELEVATIONS ARE GIVEN IN FEET AND ARE REFERENCED TO NGVD 1929. WHEN ELEVATIONS ARE GIVEN TO LESS THAN THREE DECIMAL PLACES, THE OMITTED DIGITS SHALL BE ASSUMED TO BE ZEROS.

EXISTING DIMENSIONS:
DIMENSIONS OF THE EXISTING STRUCTURE SHOWN ON THESE PLANS ARE FOR GENERAL REFERENCE ONLY. THEY HAVE BEEN TAKEN FROM THE ORIGINAL DESIGN DRAWINGS AND ARE NOT GUARANTEED. THE CONTRACTOR SHALL TAKE ALL FIELD MEASUREMENTS NECESSARY TO ASSURE PROPER FIT OF THE FINISHED WORK AND SHALL ASSUME FULL RESPONSIBILITY FOR THEIR ACCURACY. WHEN SHOP DRAWINGS BASED ON FIELD MEASUREMENTS ARE SUBMITTED FOR APPROVAL, THE FIELD MEASUREMENTS SHALL ALSO BE SUBMITTED FOR REFERENCE BY THE REVIEWER.

CONCRETE NOTES

CLASS 'A' CONCRETE:
CLASS 'A' CONCRETE SHALL BE USED FOR ENTIRE SUBSTRUCTURE, WITH THE EXCEPTION OF THE CONCRETE BEARING PADS AND THE PRECAST CONCRETE BACKWALL.

CLASS 'F' CONCRETE
CLASS 'F' CONCRETE SHALL BE USED FOR THE CONCRETE BEARING PADS.

JOINT SEAL:
SEE SPECIAL PROVISIONS.

EXPOSED EDGES:
EXPOSED EDGES OF CONCRETE SHALL BE BEVELED 1"x1" UNLESS DIMENSIONED OTHERWISE.

CONCRETE COVER:
ALL REINFORCEMENT TO HAVE TWO INCHES COVER UNLESS DIMENSIONED OTHERWISE.

REINFORCEMENT:
ALL REINFORCEMENT SHALL BE ASTM A615 GRADE 60.

PREFORMED EXPANSION JOINT FILLER:
THE COST OF FURNISHING AND INSTALLING PREFORMED EXPANSION JOINT FILLER SHALL BE INCLUDED IN THE COST OF THE ITEM "CLASS 'A' CONCRETE".

CONSTRUCTION JOINTS:
CONSTRUCTION JOINTS OTHER THAN THOSE SHOWN ON THE PLANS, WILL NOT BE PERMITTED WITHOUT THE PRIOR APPROVAL OF THE ENGINEER.

UTILITIES:
THE CONTRACTOR SHALL VERIFY THE SIZE AND LOCATION OF ALL UTILITIES WITHIN THE PROJECT LIMITS PRIOR TO THE START OF CONSTRUCTION AND SHALL TAKE NECESSARY PRECAUTIONS WHEN WORKING NEAR UTILITIES SO AS NOT TO DISTURB THEM.

NOTE

1. THE CONTRACTOR SHALL ONLY INSTALL BALLAST UP TO 4 INCHES BELOW THE BOTTOM OF THE TIE. THE CONTRACTOR SHALL COORDINATE LIMITS OF BALLAST INSTALLATION WITH HRR.

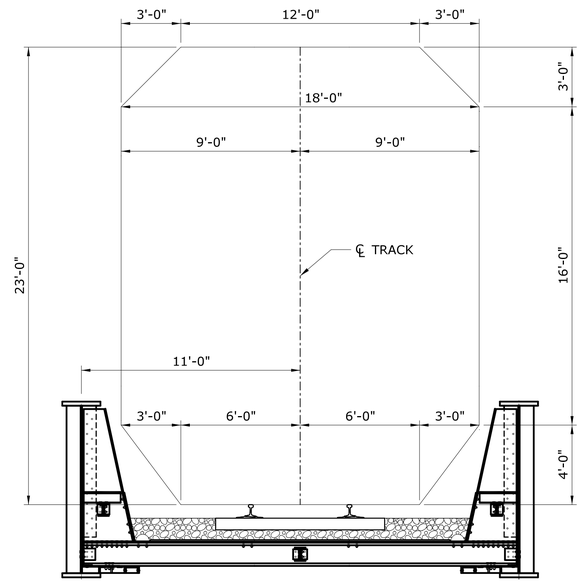

RAILROAD CLEARANCE DIAGRAM
N.T.S.

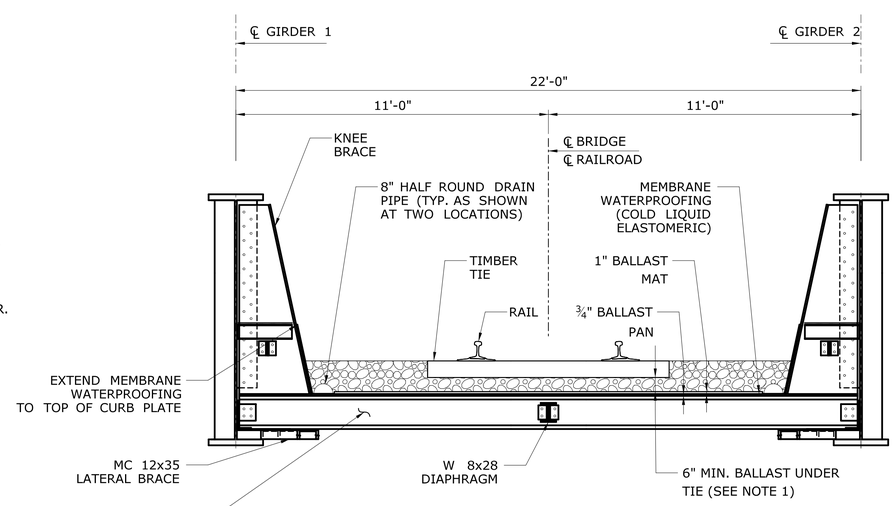

PROPOSED SECTION
SCALE: 3/8" = 1'-0"

TABLE OF QUANTITIES

ITEM	UNIT	QUANTITY
LEAD COMPLIANCE FOR MISCELLANEOUS EXTERIOR TASKS	LS	LS
CONSTRUCTION ACCESS	LS	LS
ENVIRONMENTAL HEALTH AND SAFETY	LS	LS
EARTH EXCAVATION	CY	465
EXCAVATION AND REUSE OF EXISTING CHANNEL BOTTOM MATERIAL	CY	48
SETTLEMENT MONITORING PROGRAM	LS	LS
STRUCTURE EXCAVATION - EARTH (EXCLUDING COFFERDAM AND DEWATERING)	CY	320
COFFERDAM AND DEWATERING	LF	150
HANDLING CONTAMINATED GROUNDWATER	LS	LS
HANDLING WATER (SITE NO. 4)	LS	LS
ANTI-TRACKING PAD	SY	560
GRANULAR FILL	CY	70
BALLAST	CY	45
SUBBALLAST	CY	35
BALLAST MAT	SF	1670
PERVIOUS STRUCTURE BACKFILL	CY	135
SEDIMENTATION CONTROL SYSTEM	LF	1160
REMOVAL OF SUPERSTRUCTURE (SITE NO. 4)	LS	LS
8" HALF ROUND STEEL DRAINAGE PIPE	LF	225
STEEL-LAMINATED ELASTOMERIC BEARINGS	CI	12000
CLASS 'A' CONCRETE	CY	160
CLASS 'F' CONCRETE	CY	3
PRECAST SUBSTRUCTURE ELEMENTS	CY	25
DEFORMED STEEL BARS	LB	12000
STRUCTURAL STEEL (SITE NO. 4)	LS	LS
FURNISHING STEEL PILES	LB	327600
DRIVING STEEL PILES	LF	3900
SPLICING STEEL PILES	EA	5
POINT REINFORCEMENT FOR STEEL PILES	EA	60
TEST PILE (STEEL HP 12X84 -90' LONG)	EA	2
DYNAMIC PILE DRIVING ANALYSIS (P.D.A.) TEST	EA	2
REMOVAL OF EXISTING TIMBER PILES	EA	42
STANDARD RIPRAP	CY	235
MODIFIED RIPRAP	CY	20
PLACEMENT OF CHANNEL BOULDER	EA	8
MEMBRANE WATERPROOFING (COLD LIQUID ELASTOMERIC)	SY	270
TEMPORARY SHEET PILING (RAILROAD)	SF	1800
6" OUTLET FOR UNDERDRAIN	LF	38
CONSERVATION SEEDING FOR SLOPES	SY	1960
WETLAND GRASS ESTABLISHMENT	SF	2890
SELECTIVE CLEARING AND THINNING (SITE NO. 4)	LS	LS
CONTROL AND REMOVAL OF INVASIVE VEGETATION	SY	1140
MOBILIZATION AND PROJECT CLOSEOUT	LS	LS
CONSTRUCTION STAKING (SITE NO. 4)	LS	LS

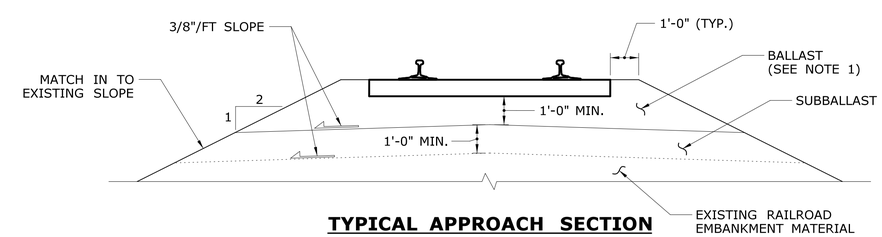

TYPICAL APPROACH SECTION
SCALE: 3/8" = 1'-0"

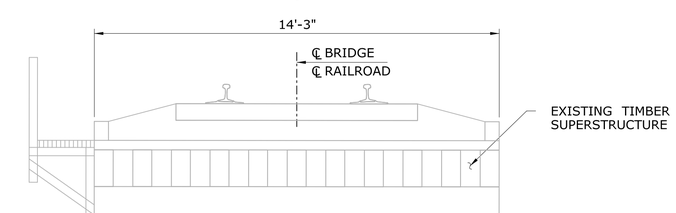

EXISTING SECTION
SCALE: 3/8" = 1'-0"

REV.	DATE	REVISION DESCRIPTION	SHEET NO.
-	-	-	-
-	-	-	-
-	-	-	-
-	-	-	-
-	-	-	-
-	-	-	-

THE INFORMATION, INCLUDING ESTIMATED QUANTITIES OF WORK, SHOWN ON THESE SHEETS IS BASED ON LIMITED INVESTIGATIONS BY THE STATE AND IS IN NO WAY WARRANTED TO INDICATE THE CONDITIONS OF ACTUAL QUANTITIES OF WORK WHICH WILL BE REQUIRED.

PLOTTED: 7/25/2018

DESIGNER/DRAFTER: BC/CR
CHECKED BY: RB
SCALE AS NOTED

STATE OF CONNECTICUT
DEPARTMENT OF TRANSPORTATION

FILENAME: ...\SB_MSH_170_3192_MP_44.50_S-004.dgn

LOCHNER
H.W. LOCHNER, INC
55 Hartland St
East Hartford, CT 06108

APPROVED BY: R. BRAY
DATE: 12/06/17

STATE OF CONNECTICUT RICHARD A. BRAY LICENSED PROFESSIONAL ENGINEER

PROJECT TITLE:
BRIDGE NO. 09223R HOUSATONIC RAILROAD MP 44.50 OVER THE HOLLENBECK RIVER

TOWN: **CANAAN**

DRAWING TITLE: **NOTES, QUANTITIES, AND SECTIONS**

PROJECT NO. **170-3192**
DRAWING NO. **S4-4**
SHEET NO. **03.04.05**

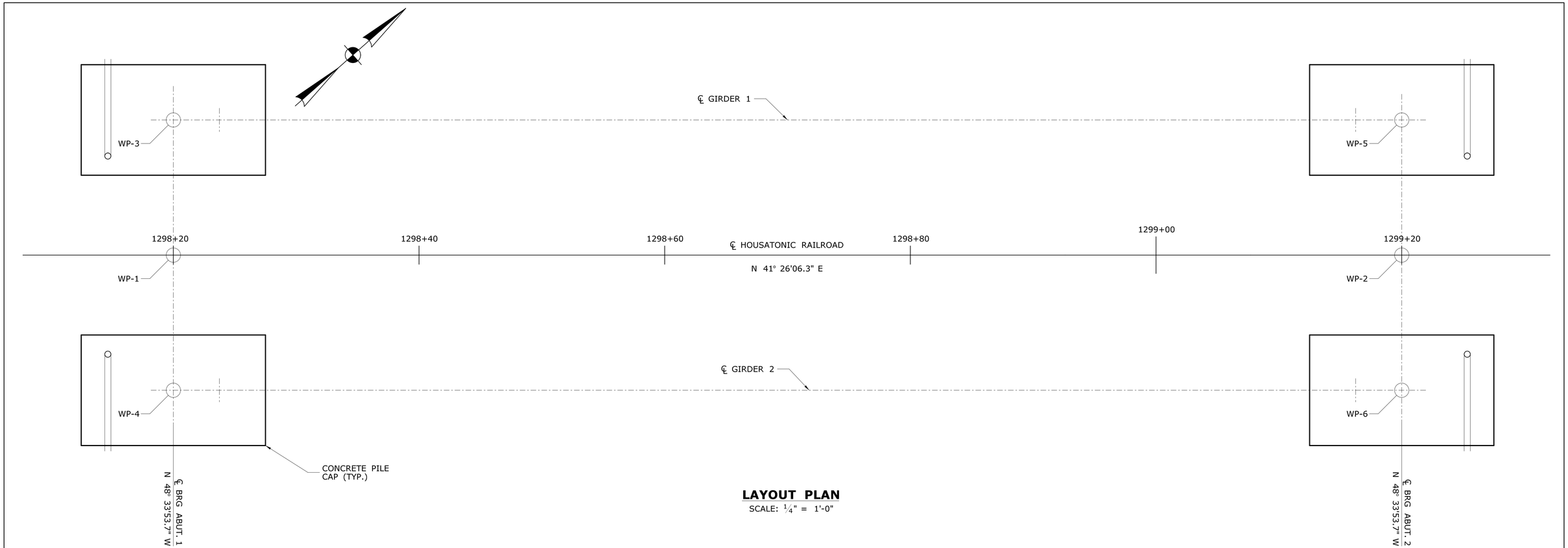

LAYOUT PLAN

SCALE: ¼" = 1'-0"

WORKING POINT COORDINATES		
WP NO.	NORTHING (Y)	EASTING (X)
1	916750.31	834777.47
2	916825.28	834843.65
3	916757.59	834769.23
4	916743.03	834785.72
5	916832.56	834835.40
6	916818.00	834851.90

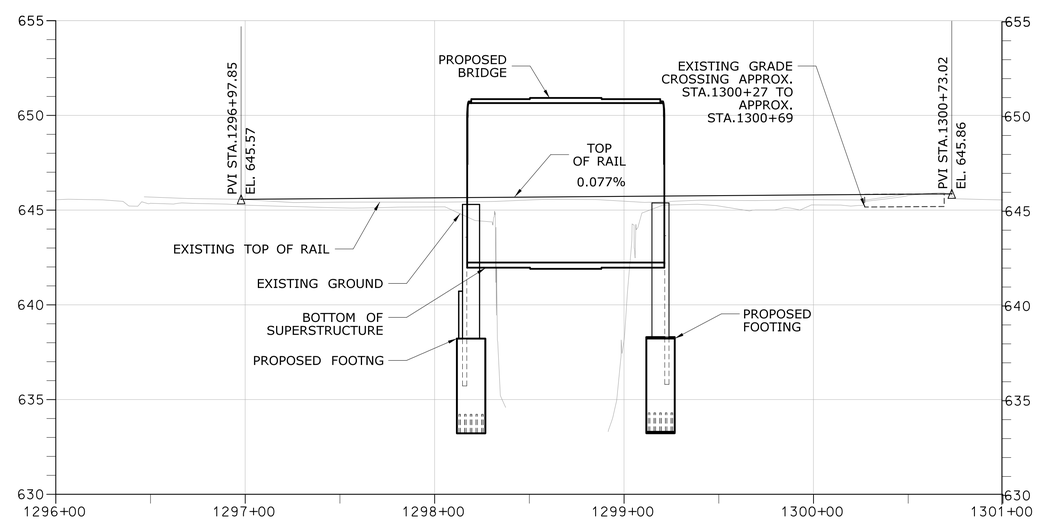

TRACK PROFILE

SCALE: VERTICAL ¼" = 1'
HORIZONTAL: 1' = 40'

REV.	DATE	REVISION DESCRIPTION	SHEET NO.
-	-	-	-
-	-	-	-
-	-	-	-
-	-	-	-
-	-	-	-
-	-	-	-

THE INFORMATION, INCLUDING ESTIMATED QUANTITIES OF WORK, SHOWN ON THESE SHEETS IS BASED ON LIMITED INVESTIGATIONS BY THE STATE AND IS IN NO WAY WARRANTED TO INDICATE THE CONDITIONS OF ACTUAL QUANTITIES OF WORK WHICH WILL BE REQUIRED.

PLOTTED: 7/25/2018

DESIGNER/DRAFTER: BC/CR
CHECKED BY: RB
SCALE AS NOTED

STATE OF CONNECTICUT
DEPARTMENT OF TRANSPORTATION

FILENAME: ...\SB_MSH_170_3192_MP_44.50_S-005.dgn

LOCHNER
H.W. LOCHNER, INC
55 Hartland St
East Hartford, CT 06108

APPROVED BY: R. BRAY
DATE: 12/06/17

STATE OF CONNECTICUT RICHARD A. BRAY LICENSED PROFESSIONAL ENGINEER

PROJECT TITLE:
BRIDGE NO. 09223R HOUSATONIC RAILROAD MP 44.50 OVER THE HOLLENBECK RIVER

TOWN: **CANAAN**

DRAWING TITLE: **LAYOUT PLAN AND TRACK PROFILE**

PROJECT NO. **170-3192**
DRAWING NO. **S4-5**
SHEET NO. **03.04.06**

B-4-1 1 of 4

Connecticut DOT Boring Report

Driller: Trent Roe		Hole No.: B-4-1	
Inspector: Ray Janeiro	Town: CANAAN	Stat./Offset: MP 44.50	
Engineer: GeoDesign, Inc.	Project No.: 170-3192 (Geo: 0331-019.00)	Northing: 197813.1154	
Start Date: 3-10-14	Route No.:	Easting: 1224091.07	
Finish Date: 3-12-14	Bridge No.: 09223R	Surface Elevation: 646.0	
Project Description: Four Railroad Bridges on the Berkshire Line of the Housatonic Railroad			
Casing Size/Type: HW 4"	Sampler Type/Size: SS 1-3/8 " I.D.	Core Barrel Type: NQ (dt) 1-7/8" I.D.	
Hammer Wt.: 300 lb. Fall: 24in.	Hammer Wt.: 140 lb. Fall: 30 in.		
Groundwater Observations: @12 feet after 0 hours			

Depth (ft)	Sample Type/No.	Blows on Sampler per 6 inches	Pen. (in.)	Rec. (in.)	RQD %	Generalized Strata Description	Material Description and Notes	Elevation (ft)
0	S-1	8 19 18 9	24	12		Railroad Ballast / Railroad Fill	Dense, dark brown fine to coarse GRAVEL, little fine to coarse Sand, trace Silt, trace (-) Forest Debris	645
	S-2	9 7 7 7	24	12		Alluvium	Medium dense, Top 5": black-brown fine to coarse GRAVEL, some (-) fine to coarse Sand, trace Silt Bottom 7": olive fine stratified SAND, little (-) Silt	
5	S-3	3 3 4 4	24	20			Loose, brown fine SAND, trace Silt, layered with dark brown fine Sand, some Silt up to two inches thick, (moist)	640
10	S-4	3 3 3 2	24	24			Loose, olive fine SAND, some (-) Silt, trace (-) Organic Fibers, mottled	635
15	S-5	5 5 5 6	24	17			Loose to medium dense, Top 10": olive SILT, trace fine Sand, trace (-) Wood fragments Bottom 7": brown fine SAND, trace Silt, trace (-) Wood fragments	630
						Sand		
20	S-6	4 4 7 7	24	10			Medium dense, brown fine to medium SAND, trace Silt, trace (-) Wood fragments	625
25	S-7	4 5 5 6	24	11			Loose to medium dense, brown fine to coarse SAND, trace Silt	620
30								

Sample Type: S = Split Spoon C = Core UP = Undisturbed Piston V = Vane Shear Test
Proportions Used: Trace = 1 - 10%, Little = 10 - 20%, Some = 20 - 35%, And = 35 - 50%

Total Penetration in Earth: 80.3ft Rock: 10ft	NOTES: Wood encountered at about 13' below grade. Driller notes stratum change at about 54' below grade. Rig chatter from 68' to 70' below grade. Cobble (inferred) at 69' below grade.	Sheet 1 of 4
No. of Soil Samples: 18 No. of Core Runs: 2		SM-001-M REV. 1/02

B-4-1 2 of 4

Connecticut DOT Boring Report

Driller: Trent Roe		Hole No.: B-4-1	
Inspector: Ray Janeiro	Town: CANAAN	Stat./Offset: MP 44.50	
Engineer: GeoDesign, Inc.	Project No.: 170-3192 (Geo: 0331-019.00)	Northing: 197813.1154	
Start Date: 3-10-14	Route No.:	Easting: 1224091.07	
Finish Date: 3-12-14	Bridge No.: 09223R	Surface Elevation: 646.0	
Project Description: Four Railroad Bridges on the Berkshire Line of the Housatonic Railroad			
Casing Size/Type: HW 4"	Sampler Type/Size: SS 1-3/8 " I.D.	Core Barrel Type: NQ (dt) 1-7/8" I.D.	
Hammer Wt.: 300 lb. Fall: 24in.	Hammer Wt.: 140 lb. Fall: 30 in.		
Groundwater Observations: @12 feet after 0 hours			

Depth (ft)	Sample Type/No.	Blows on Sampler per 6 inches	Pen. (in.)	Rec. (in.)	RQD %	Generalized Strata Description	Material Description and Notes	Elevation (ft)
30	S-8	- 3 5 8	24	13		Sand *(con't)*	Loose, gray brown fine SAND, trace Silt, trace (-) Mica	615
35	S-9	6 8 7 10	24	14			Medium dense, gray fine SAND, trace (at top) to some (at bottom) Silt	610
40	S-10	7 8 8 9	24	12			Medium dense, light brown fine SAND, some Silt	605
						Clay and Silt		
45	S-11	3 3 5 6	24	17			Stiff, gray CLAY and SILT, trace fine Sand	600
50	S-12	2 2 4 7	24	19			Medium, gray-light brown Silty CLAY with fine Sand partings at bottom 4 inches of sample	595
						Sand		
55	S-13	3 5 6 9	24	18			Stiff, gray CLAY and SILT partings spaced 1 to 2 inches	590
60								

Sample Type: S = Split Spoon C = Core UP = Undisturbed Piston V = Vane Shear Test
Proportions Used: Trace = 1 - 10%, Little = 10 - 20%, Some = 20 - 35%, And = 35 - 50%

Total Penetration in Earth: 80.3ft Rock: 10ft	NOTES: Wood encountered at about 13' below grade. Driller notes stratum change at about 54' below grade. Rig chatter from 68' to 70' below grade. Cobble (inferred) at 69' below grade.	Sheet 2 of 4
No. of Soil Samples: 18 No. of Core Runs: 2		SM-001-M REV. 1/02

B-4-1 3 of 4

Connecticut DOT Boring Report

Driller: Trent Roe		Hole No.: B-4-1	
Inspector: Ray Janeiro	Town: CANAAN	Stat./Offset: MP 44.50	
Engineer: GeoDesign, Inc.	Project No.: 170-3192 (Geo: 0331-019.00)	Northing: 197813.1154	
Start Date: 3-10-14	Route No.:	Easting: 1224091.07	
Finish Date: 3-12-14	Bridge No.: 09223R	Surface Elevation: 646.0	
Project Description: Four Railroad Bridges on the Berkshire Line of the Housatonic Railroad			
Casing Size/Type: HW 4"	Sampler Type/Size: SS 1-3/8 " I.D.	Core Barrel Type: NQ (dt) 1-7/8" I.D.	
Hammer Wt.: 300 lb. Fall: 24in.	Hammer Wt.: 140 lb. Fall: 30 in.		
Groundwater Observations: @12 feet after 0 hours			

Depth (ft)	Sample Type/No.	Blows on Sampler per 6 inches	Pen. (in.)	Rec. (in.)	RQD %	Generalized Strata Description	Material Description and Notes	Elevation (ft)
60	S-14	8 7 6 6	24	10		Sand *(con't)*	Medium dense, gray fine to medium SAND, trace Silt, trace Dolomite	585
65	S-15	3 3 6 9	24	10			Loose, gray, Top 5": fine to medium SAND, some Silt, trace Dolomite Bottom 5": fine to coarse SAND, little Silt, trace fine Gravel	580
70	S-16	4 8 7 7	24	3			Medium dense, gray-white fine to coarse SAND, some fine to coarse Gravel, trace Silt	575
75	S-17	14 12 17 24	24	12			Medium dense, gray fine SAND, little (-) Silt, trace (-) Dolomite fragments	570
80	S-18	100/3"	3	0		Bedrock	Very dense (sampler refusal), NO RECOVERY	565
	C-1		60	58	93		Excellent Quality, Moderately Hard, Fresh, Very Wide Jointed, white-gray Dolomite MARBLE Coring Times: 4, 7, 7, 9, 9	
85	C-2		60	59	98		Excellent Quality, Moderately Hard, Fresh, Very Wide Jointed, white-gray Dolomite MARBLE Coring Times: 7, 10, 12, 16, 15	560
90								

Sample Type: S = Split Spoon C = Core UP = Undisturbed Piston V = Vane Shear Test
Proportions Used: Trace = 1 - 10%, Little = 10 - 20%, Some = 20 - 35%, And = 35 - 50%

Total Penetration in Earth: 80.3ft Rock: 10ft	NOTES: Wood encountered at about 13' below grade. Driller notes stratum change at about 54' below grade. Rig chatter from 68' to 70' below grade. Cobble (inferred) at 69' below grade.	Sheet 3 of 4
No. of Soil Samples: 18 No. of Core Runs: 2		SM-001-M REV. 1/02

B-4-1 4 of 4

Connecticut DOT Boring Report

Driller: Trent Roe		Hole No.: B-4-1	
Inspector: Ray Janeiro	Town: CANAAN	Stat./Offset: MP 44.50	
Engineer: GeoDesign, Inc.	Project No.: 170-3192 (Geo: 0331-019.00)	Northing: 197813.1154	
Start Date: 3-10-14	Route No.:	Easting: 1224091.07	
Finish Date: 3-12-14	Bridge No.: 09223R	Surface Elevation: 646.0	
Project Description: Four Railroad Bridges on the Berkshire Line of the Housatonic Railroad			
Casing Size/Type: HW 4"	Sampler Type/Size: SS 1-3/8 " I.D.	Core Barrel Type: NQ (dt) 1-7/8" I.D.	
Hammer Wt.: 300 lb. Fall: 24in.	Hammer Wt.: 140 lb. Fall: 30 in.		
Groundwater Observations: @12 feet after 0 hours			

Depth (ft)	Sample Type/No.	Blows on Sampler per 6 inches	Pen. (in.)	Rec. (in.)	RQD %	Generalized Strata Description	Material Description and Notes	Elevation (ft)
90							END OF BORING 90.3ft	555
95								550
100								545
105								540
110								535
115								530
120								

Sample Type: S = Split Spoon C = Core UP = Undisturbed Piston V = Vane Shear Test
Proportions Used: Trace = 1 - 10%, Little = 10 - 20%, Some = 20 - 35%, And = 35 - 50%

Total Penetration in Earth: 80.3ft Rock: 10ft	NOTES: Wood encountered at about 13' below grade. Driller notes stratum change at about 54' below grade. Rig chatter from 68' to 70' below grade. Cobble (inferred) at 69' below grade.	Sheet 4 of 4
No. of Soil Samples: 18 No. of Core Runs: 2		SM-001-M REV. 1/02

REV.	DATE	REVISION DESCRIPTION	SHEET NO.
-	-	-	-
-	-	-	-
-	-	-	-
-	-	-	-
-	-	-	-
-	-	-	-

THE INFORMATION, INCLUDING ESTIMATED QUANTITIES OF WORK, SHOWN ON THESE SHEETS IS BASED ON LIMITED INVESTIGATIONS BY THE STATE AND IS IN NO WAY WARRANTED TO INDICATE THE CONDITIONS OF ACTUAL QUANTITIES OF WORK WHICH WILL BE REQUIRED.

PLOTTED: 7/25/2018

DESIGNER/DRAFTER: GEODESIGN
CHECKED BY: GEODESIGN
NOT TO SCALE

STATE OF CONNECTICUT
DEPARTMENT OF TRANSPORTATION

FILENAME: ...\SB_MSH_170_3192_MP_44.50_S-006.dgn

GEODESIGN INCORPORATED
Geotechnical Construction Environmental
Materials & Scientific
984 Southford Road Middlebury, CT 06762
Telephone: (203) 758-8836 Fax: (203) 758-8837

APPROVED BY: R. BRAY DATE: 12/06/17

STATE OF CONNECTICUT RICHARD A. BRAY LICENSED PROFESSIONAL ENGINEER

PROJECT TITLE:
BRIDGE NO. 09223R HOUSATONIC RAILROAD MP 44.50 OVER THE HOLLENBECK RIVER

TOWN: **CANAAN**

DRAWING TITLE: **BORING LOGS-1**

PROJECT NO. **170-3192**
DRAWING NO. **S4-6**
SHEET NO. **03.04.07**

B-4-2 1 of 3

Driller: Trent Roe	**Connecticut DOT Boring Report**		Hole No.: B-4-2
Inspector: Ray Janeiro	Town: CANAAN		Stat./Offset: MP 44.50
Engineer: GeoDesign, Inc.	Project No.: 170-3192 (Geo: 0331-019.00)		Northing: 197794.86
Start Date: 3-12-14	Route No.:		Easting: 1223992.13
Finish Date: 3-14-14	Bridge No.: 09223R		Surface Elevation: 646.0
Project Description: Four Railroad Bridges on the Berkshire Line of the Housatonic Railroad			
Casing Size/Type: HW 4"	Sampler Type/Size: SS 1-3/8 " I.D.		Core Barrel Type:
Hammer Wt.: 300 lb. Fall: 24in.	Hammer Wt.: 140 lb. Fall: 30 in.		
Groundwater Observations: @12 feet after 0 hours			

Depth (ft)	Sample Type/No.	Blows on Sampler per 6 inches	Pen. (in.)	Rec. (in.)	RQD %	Generalized Strata Description	Material Description and Notes	Elevation (ft)
0	S-1	11 14 13 7	24	12		Railroad Ballast / Fill	Medium dense, black fine to coarse SAND, some fine Gravel, little Silt, trace (-) Cinders	645
	S-2	5 4 4 4	24	11			Loose, black fine to coarse SAND, little Silt, trace fine Gravel, trace (-) Slag, trace (-) Cinders	
5	S-3	3 3 2 3	24	17			Loose, black-brown fine to coarse SAND, little (-) Silt, trace (-) Slag, trace (-) Cinders, trace (-) Organic fibers	640
	S-4	4 3 3 3	24	12			Loose, black-brown fine to coarse SAND, some fine Gravel, trace Silt, trace (-) Cinders, trace (-) Slag	
10	S-5	4 2 5 5	24	21			Loose, black-brown fine to coarse SAND, little Silt, trace (-) Cinders	635
						Wood		
						Alluvium		
15	S-6	5 6 6 10	24	14			Medium dense, olive fine to coarse SAND, trace Silt, trace (-) decomposed Wood fragments	630
						Sand		
20	S-7	7 11 12 12	24	12			Medium dense, olive fine to medium SAND, trace Silt	625
25	S-8	10 15 18 22	24	12			Dense, brown fine to medium SAND, trace Silt	620
30								

Sample Type: S = Split Spoon C = Core UP = Undisturbed Piston V = Vane Shear Test

Proportions Used: Trace = 1 - 10%, Little = 10 - 20%, Some = 20 - 35%, And = 35 - 50%

Total Penetration in Earth: 68.3ft Rock: 0ft	NOTES: Wood obstruction encountered at 12.5 feet below grade. Offset 3 feet south and advanced to 15 feet before taking next sample. Hard drilling 12 to 14 feet below grade. Driller notes change in drilling resistance at about 59 feet below grade. Casing refusal at approximately 68.25 feet below grade. Rig chatter from 67 feet to 68.25 feet below grade. Roller bit refusal at approximately 68.3 feet below grade. Split spoon refusal at 68.3 feet below grade.	Sheet 1 of 3
No. of Soil Samples: 17 No. of Core Runs: 0		SM-001-M REV. 1/02

B-4-2 2 of 3

Driller: Trent Roe	**Connecticut DOT Boring Report**		Hole No.: B-4-2
Inspector: Ray Janeiro	Town: CANAAN		Stat./Offset: MP 44.50
Engineer: GeoDesign, Inc.	Project No.: 170-3192 (Geo: 0331-019.00)		Northing: 197794.86
Start Date: 3-12-14	Route No.:		Easting: 1223992.13
Finish Date: 3-14-14	Bridge No.: 09223R		Surface Elevation: 646.0
Project Description: Four Railroad Bridges on the Berkshire Line of the Housatonic Railroad			
Casing Size/Type: HW 4"	Sampler Type/Size: SS 1-3/8 " I.D.		Core Barrel Type:
Hammer Wt.: 300 lb. Fall: 24in.	Hammer Wt.: 140 lb. Fall: 30 in.		
Groundwater Observations: @12 feet after 0 hours			

Depth (ft)	Sample Type/No.	Blows on Sampler per 6 inches	Pen. (in.)	Rec. (in.)	RQD %	Generalized Strata Description	Material Description and Notes	Elevation (ft)
30	S-9	10 16 19 23	24	11		Sand *(con't)*	Dense, gray fine SAND, trace (+) Silt	615
35	S-10	5 8 13 18	24	16			Medium dense, gray fine SAND, trace Silt, trace coarse Sand	610
40	S-11	7 12 12 19	24	14			Medium dense, gray fine SAND, little Silt	605
45	S-12	5 6 8 10	24	20		Clayey Silt	Medium dense, gray stratified SILT, little fine Sand, trace Clay	600
50	S-13	4 5 6 8	24	17			Stiff, gray stratified SILT and CLAY, with fine Sand, trace Silt partings	595
55	S-14	4 4 6 7	24	22			Stiff, gray stratified Clayey SILT, with fine Sand and Silt partings	590
60								

Sample Type: S = Split Spoon C = Core UP = Undisturbed Piston V = Vane Shear Test

Proportions Used: Trace = 1 - 10%, Little = 10 - 20%, Some = 20 - 35%, And = 35 - 50%

Total Penetration in Earth: 68.3ft Rock: 0ft	NOTES: Wood obstruction encountered at 12.5 feet below grade. Offset 3 feet south and advanced to 15 feet before taking next sample. Hard drilling 12 to 14 feet below grade. Driller notes change in drilling resistance at about 59 feet below grade. Casing refusal at approximately 68.25 feet below grade. Rig chatter from 67 feet to 68.25 feet below grade. Roller bit refusal at approximately 68.3 feet below grade. Split spoon refusal at 68.3 feet below grade.	Sheet 2 of 3
No. of Soil Samples: 17 No. of Core Runs: 0		SM-001-M REV. 1/02

B-4-2 3 of 3

Driller: Trent Roe	**Connecticut DOT Boring Report**		Hole No.: B-4-2
Inspector: Ray Janeiro	Town: CANAAN		Stat./Offset: MP 44.50
Engineer: GeoDesign, Inc.	Project No.: 170-3192 (Geo: 0331-019.00)		Northing: 197794.86
Start Date: 3-12-14	Route No.:		Easting: 1223992.13
Finish Date: 3-14-14	Bridge No.: 09223R		Surface Elevation: 646.0
Project Description: Four Railroad Bridges on the Berkshire Line of the Housatonic Railroad			
Casing Size/Type: HW 4"	Sampler Type/Size: SS 1-3/8 " I.D.		Core Barrel Type:
Hammer Wt.: 300 lb. Fall: 24in.	Hammer Wt.: 140 lb. Fall: 30 in.		
Groundwater Observations: @12 feet after 0 hours			

Depth (ft)	Sample Type/No.	Blows on Sampler per 6 inches	Pen. (in.)	Rec. (in.)	RQD %	Generalized Strata Description	Material Description and Notes	Elevation (ft)
60	S-15	10 14 16 15	24	13		Clayey Silt *(con't)*	Hard, gray stratified Clayey SILT with fine Sand, trace Silt seams up to 2" thick	585
65	S-16	8 7 14 14	24	10			Medium dense, gray stratified SILT with fine Sand, little Silt seams up to 1" thick, coarse Sand and fine Gravel in sample tip	580
						Sand and Gravel		
	S-17	100/0"	0	0			Very dense, NO RECOVERY	
70							END OF BORING 68.3ft	575
75								570
80								565
85								560
90								

Sample Type: S = Split Spoon C = Core UP = Undisturbed Piston V = Vane Shear Test

Proportions Used: Trace = 1 - 10%, Little = 10 - 20%, Some = 20 - 35%, And = 35 - 50%

Total Penetration in Earth: 68.3ft Rock: 0ft	NOTES: Wood obstruction encountered at 12.5 feet below grade. Offset 3 feet south and advanced to 15 feet before taking next sample. Hard drilling 12 to 14 feet below grade. Driller notes change in drilling resistance at about 59 feet below grade. Casing refusal at approximately 68.25 feet below grade. Rig chatter from 67 feet to 68.25 feet below grade. Roller bit refusal at approximately 68.3 feet below grade. Split spoon refusal at 68.3 feet below grade.	Sheet 3 of 3
No. of Soil Samples: 17 No. of Core Runs: 0		SM-001-M REV. 1/02

REV.	DATE	REVISION DESCRIPTION	SHEET NO.
-	-	-	-
-	-	-	-
-	-	-	-
-	-	-	-
-	-	-	-
-	-	-	-

THE INFORMATION, INCLUDING ESTIMATED QUANTITIES OF WORK, SHOWN ON THESE SHEETS IS BASED ON LIMITED INVESTIGATIONS BY THE STATE AND IS IN NO WAY WARRANTED TO INDICATE THE CONDITIONS OF ACTUAL QUANTITIES OF WORK WHICH WILL BE REQUIRED.

PLOTTED: 7/25/2018

DESIGNER/DRAFTER: GEODESIGN

CHECKED BY: GEODESIGN

NOT TO SCALE

STATE OF CONNECTICUT
DEPARTMENT OF TRANSPORTATION

FILENAME: ...\SB_MSH_170_3192_MP_44.50_S-007.dgn

GEODESIGN INCORPORATED
Geotechnical / Construction / Environmental / Materials Engineers
984 Southford Road • Middbury, CT 06762
Telephone: (203) 758-8836 Fax: (203) 758-8849

APPROVED BY: R. BRAY DATE: 12/06/17

STATE OF CONNECTICUT RICHARD A. BRAY LICENSED PROFESSIONAL ENGINEER

PROJECT TITLE:
BRIDGE NO. 09223R HOUSATONIC RAILROAD MP 44.50 OVER THE HOLLENBECK RIVER

TOWN: **CANAAN**

DRAWING TITLE: **BORING LOGS-2**

PROJECT NO. **170-3192**

DRAWING NO. **S4-7**

SHEET NO. **03.04.08**

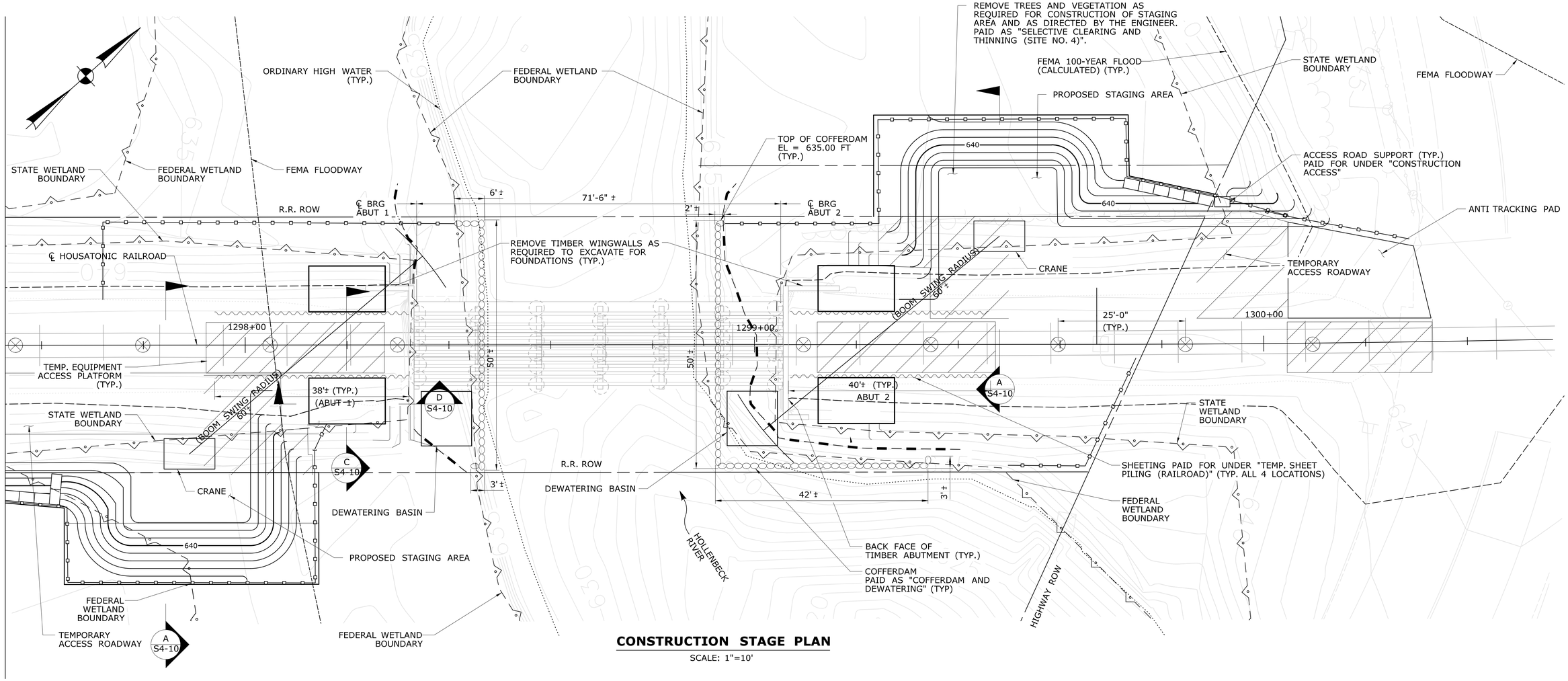

CONSTRUCTION STAGE PLAN

SCALE: 1"=10'

GENERAL NOTES

1. THE CONTRACTOR SHALL INSTALL SEDIMENTATION CONTROL SYSTEMS AS SHOWN ON THE PLANS, OR AS DIRECTED BY THE ENGINEER.
2. CONSTRUCTION ACCESS TO ABUTMENT 1 SHALL BE FROM SAND RD. ACCESS ROADWAY. CONSTRUCTION ACCESS TO ABUTMENT 2 SHALL BE FROM ACCESS ROADWAY CROSSING PRIVATE PROPERTY. WORK IN WATER SHALL ONLY BE NECESSARY FOR THE REMOVAL OF EXISTING STRUCTURE.
3. CONSTRUCTION ACTIVITIES WHICH TAKE PLACE PRIOR TO TRACKS BEING TAKEN OUT OF SERVICE SHALL BE PERFORMED IN ACCORDANCE WITH CONTRACT SPECIAL PROVISIONS, INCLUDING "WORK ON RAILROAD PROPERTY",AND "PROSECUTION AND PROGRESS".
4. TEMPORARY EQUIPMENT ACCESS PLATFORMS AT EACH ABUTMENT SHALL BE CONSTRUCTED IN THE APPROXIMATE LOCATIONS SHOWN. THESE PLATFORMS SHALL BE THE RESPONSIBILITY OF THE HRR. PAD LOCATION AND ACCESS REQUIREMENTS SHALL BE COORDINATED BY THE CONTRACTOR AND HRR PRIOR TO PLACMENT. THESE PADS SHALL BE USED FOR CONSTRUCTION ACTIVITIES AT TIMES ALLOWED BY THE SPECIAL PROVISIONS. THE COST TO PLACE AND REMOVE THESE PADS SHALL BE INCLUDED IN THE PAY ITEM "CONSTRUCTION ACCESS".

STAGE 1 (TRACK IN SERVICE)

1. THE FOLLOWING STEPS WILL BE PERFORMED BY THE CONTRACTOR DURING SHORT TERM TRACK OUTAGES (DAILY OR WEEKEND) IN COORDINATION WITH HRR.
2. PLACE SETTLEMENT MONITORING POINTS AS SHOWN ON THE PLANS AND AS DIRECTED BY THE ENGINEER. BEGIN SETTLEMENT MONITORING PROGRAM IN ACCORDANCE WITH THE REQUIREMENTS OF THE ITEM SPECIAL PROVISION.
3. INSTALL SEDIMENTATION CONTROL SYSTEM.
4. INSTALL TEMPORARY FILL FOR THE CONSTRUCTION ACCESS ROADWAYS, AND TEMPORARY CRANE STAGING AREAS. CONSTRUCTION GATES SHALL BE INSTALLED TO PREVENT PUBLIC ACCESS TO THE CONSTRUCTION ROADWAYS
5. PLACE TEMPORARY SHEET PILING (RAILROAD) AS SHOWN. SHEET PILE SHALL EXTEND TO BACK FACE OF TIMBER ABUTMENT.
6. REMOVE EXISTING TIMBER WINGWALLS AS REQUIRED FOR PILE CAP EXCAVATION.
7. EXCAVATE BEHIND SHEET PILING. EXCAVATION WILL BE DONE FROM TRACK LEVEL UTILIZING TEMPORARY WORK PLATFORM OR HI RAIL EQUIPMENT.
8. DRIVE STEEL H-PILE AND PERFORM PDA TESTS AS REQUIRED. DRIVE REMAINING PILES AS DIRECTED BY THE ENGINEER.
9. CONSTRUCT CAST IN PLACE CONCRETE PILE CAP AND ABUTMENT SEAT.
10. POUR CONCRETE BEARING PADS. PLACE STEEL LAMINATED ELASTOMERIC BEARINGS.
11. ASSEMBLE STEEL SUPERSTRUCTURE AT REMOTE ASSEMBLY LOCATION. PREPARE SUPERSTRUCTURE FOR TRANSPORT TO THE BRIDGE LOCATION.

TEMP. HYDRAULIC DATA	
AVERAGE DAILY FLOW	74 CFS
AVERAGE SPRING FLOW	148 CFS
2-YEAR FREQUENCY DISCHARGE	1,160 CFS
TEMPORARY DESIGN DISCHARGE	588 CFS
TEMPORARY DESIGN FREQUENCY	4 TIMES THE SPRING FLOW
TEMPORARY WATER SURFACE ELEVATION UPSTREAM	634.84
TEMPORARY WATER SURFACE ELEVATION DOWNSTREAM	634.55

LEGEND

⊗ SETTLEMENT MONITORING POINT

—▫—▫—▫— SEDIMENTATION CONTROL SYSTEM

REV.	DATE	REVISION DESCRIPTION	SHEET NO.
-	-	-	-
-	-	-	-
-	-	-	-
-	-	-	-
-	-	-	-
-	-	-	-

BC/VK

THE INFORMATION, INCLUDING ESTIMATED QUANTITIES OF WORK, SHOWN ON THESE SHEETS IS BASED ON LIMITED INVESTIGATIONS BY THE STATE AND IS IN NO WAY WARRANTED TO INDICATE THE CONDITIONS OF ACTUAL QUANTITIES OF WORK WHICH WILL BE REQUIRED.

PLOTTED: 7/25/2018

DESIGNER/DRAFTER: BC/CR

CHECKED BY: RB

SCALE IN FEET 0 10 20

SCALE 1"=10'

STATE OF CONNECTICUT
DEPARTMENT OF TRANSPORTATION

FILENAME: ...\SB_MSH_170_3192_MP_44.50_S-008.dgn

LOCHNER
H.W. LOCHNER, INC
55 Hartland St
East Hartford, CT 06108

APPROVED BY: R. BRAY DATE: 12/06/17

STATE OF CONNECTICUT RICHARD A. BRAY LICENSED PROFESSIONAL ENGINEER

PROJECT TITLE:
BRIDGE NO. 09223R HOUSATONIC RAILROAD MP 44.50 OVER THE HOLLENBECK RIVER

TOWN: **CANAAN**

DRAWING TITLE: **STAGE CONSTRUCTION - 1**

PROJECT NO. **170-3192**

DRAWING NO. **S4-8**

SHEET NO. **03.04.09**

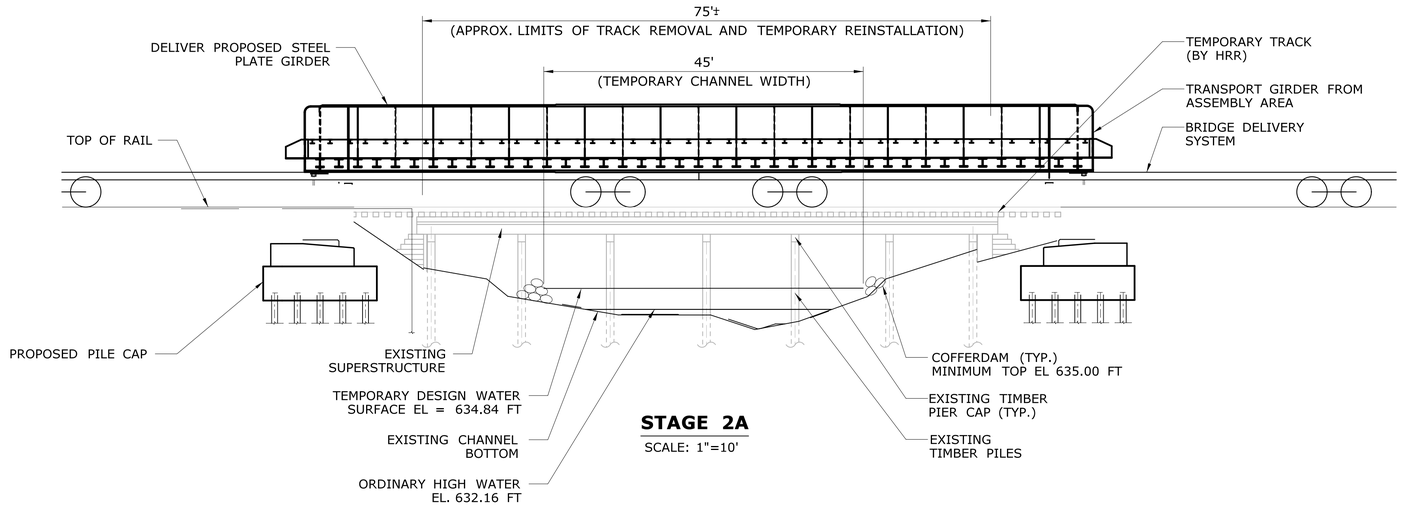

STAGE 2A

SCALE: 1"=10'

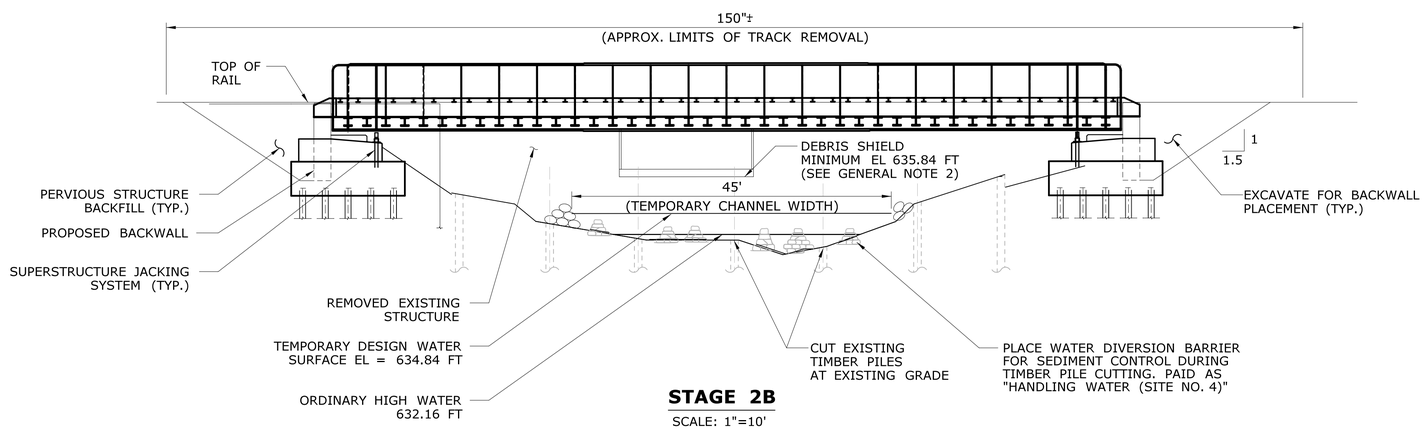

STAGE 2B

SCALE: 1"=10'

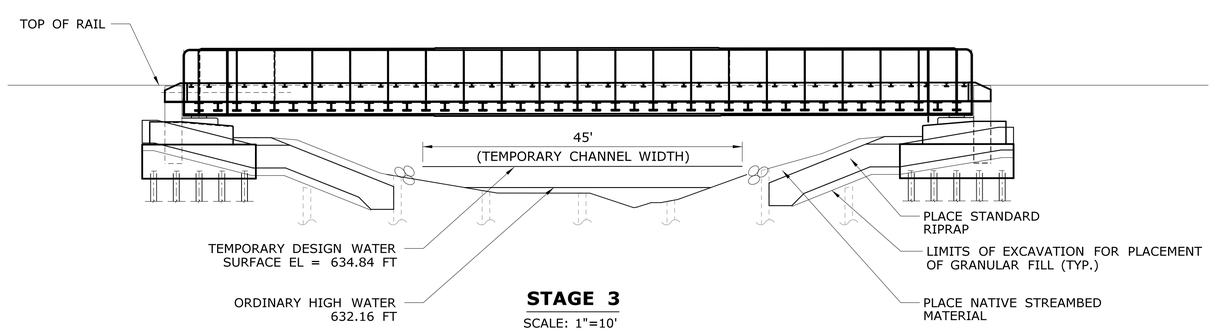

STAGE 3

SCALE: 1"=10'

GENERAL NOTES

1. SUPERSTRUCTURE ERECTION SHALL TAKE PLACE DURING A LONG TERM TRACK OUTAGE. ALL WORK SHALL BE PERFORMED IN ACCORDANCE WITH THE PREVIOUSLY APPROVED PLAN.
2. THE CONTRACTOR SHALL PROVIDE A DEBRIS CONTAINMENT SYSTEM TO COLLECT WASTE FROM THE REMOVAL OF THE EXISTING TIMBER STRUCTURE. THE SYSTEM MAY BE SUPPORTED FROM THE PROPOSED STRUCTURE (OVERHEAD) AS SHOWN, OR BY SOME OTHER MEANS. THE COST TO DESIGN, CONSTRUCT, AND REMOVE THIS SYSTEM SHALL BE PAID AS PART OF THE ITEM "REMOVAL OF SUPERSTRUCTURE (SITE NO. 4)"

STAGE 2A (TRACK OUT OF SERVICE)

THE FOLLOWING STEPS WILL BE PERFORMED DURING A LONG TERM TRACK OUTAGE IN COORDINATION WITH HRR

1. HRR SHALL REMOVE TRACK PANELS AS REQUIRED, AND AS DIRECTED BY THE ENGINEER.
2. HRR SHALL REMOVE BALLAST AND OTHER MATERIAL FROM THE SURFACE OF THE EXISTING TIMBER DECK.
3. HRR SHALL INSTALL TEMPORARY TRACK TO REPLACE THE PANELS PREVIOUSLY REMOVED. THE TEMPORARY TRACK SHALL HAVE CAPACITY EQUAL TO THAT OF THE EXISTING SYSTEM AND BE ABLE TO SUPPORT DESIGN LIVE LOADS RESULTING FROM THE DELIVERY OF THE STEEL SUPERSTRUCTURE.
4. THE CONTRACTOR SHALL PREPARE THE SUPERSTRUCTURE JACKING SYSTEM AND DELIVER THE PREVIOUSLY ASSEMBLED STRUCTURE TO THE BRIDGE SITE. THE COST FOR THE JACKING SYSTEM AND DELIVERY OF THE BRIDGE STRUCTURE SHALL BE INCLUDED UNDER THE ITEM "STRUCTURAL STEEL (SITE NO. 4)".
5. UTILIZING THE SUPERSTRUCTURE JACKING SYSTEM, THE CONTRACTOR SHALL LIFT THE BRIDGE OFF THE DELIVERY VEHICLE. SAFELY SUPPORT AND SECURE THE BRIDGE OVERHEAD. ROLL THE DELIVERY VEHICLE AWAY FROM THE WORK ZONE.

STAGE 2B (TRACK OUT OF SERVICE)

THE FOLLOWING STEPS WILL ALL TAKE PLACE WITH THE BRIDGE SUPPORTED OVERHEAD. ALL WORK IN STAGE 2B SHALL BE PERFORMED BY THE CONTRACTOR UNLESS NOTED OTHERWISE.

1. INSTALL DEBRIS COLLECTION SYSTEM TO PREVENT CONSTRUCTION DEBRIS FROM ENTERING THE RIVER DURING THE REMOVAL OF THE EXISTING SUPERSTRUCTURE AND PIER CAPS.
2. PLACE WATER DIVERSION BARRIER FOR SEDIMENT CONTROL AROUND TIMBER PILE GROUPS. PILE GROUPS SHALL BE REMOVED INDIVIDUALLY, AND A DIVERSION BARRIER SHALL COMPLETELY ENCLOSE ONLY ONE TIMBER PILE GROUP.
3. REMOVE EXISTING SUPERSTRUCTURE.
4. REMOVE EXISTING PIER CAPS. COMPLETE REMOVAL OF TIMBER PILES BY CUTTING AT THE EXISTING GRADE. REMOVAL OF PIER CAPS SHALL BE PAID AS PART OF THE ITEM "REMOVAL OF SUPERSTRUCTURE (SITE NO. 4). REMOVAL OF REMAINING PORTION OF TIMBER PILES AND CUTTING THE PILES OFF AT THE CHANNEL EXISTING GRADE SHALL BE PAID AS PART OF THE ITEM "REMOVAL OF EXISTING TIMBER PILES".
5. REMOVE WATER DIVERSION BARRIER SYSTEM.
6. EXCAVATE BETWEEN PILE CAPS FOR BACKWALL PLACEMENT. THE EXCAVATION LIMIT SHALL BE AS SHOWN ON THE PLANS.
7. REMOVE TEMPORARY SHEET PILING (RAILROAD) TO TOP OF PILE CAP. REMOVE ADDITIONAL SHEET PILING AT THE BACKWALL BLOCKOUT FOR PLACEMENT OF THE PRECAST CONCRETE BACKWALL. AWAY FROM THE PILE CAP, REMOVE TEMPORARY SHEETING TO TWO FEET BELOW FINISHED GRADE.
8. INSTALL PRECAST CONCRETE BACKWALL (TYP. AT BOTH ABUTMENTS).
9. PLACE PERVIOUS STRUCTURE BACKFILL TO REQUIRED ELEVATION.
10. LOWER BRIDGE ONTO ABUTMENT SEATS. STEEL LAMINATED ELASTOMERIC BEARINGS (PLACED EARLIER) SHALL BE ADJUSTED AS NECESSARY PRIOR TO FINAL STRUCTURE PLACEMENT.
11. INSTALL 8" HALF ROUND DRAIN PIPE ON THE BRIDGE AS SHOWN ON THE PLANS.
12. PLACE BALLAST TO 4" BELOW BOTTOM OF TIE.
13. HRR SHALL COMPLETE BALLAST INSTALLATION, PLACE TIES, AND RAIL.

STAGE 3 (TRACK IN SERVICE)

THE FOLLOWING STEPS WILL TAKE PLACE WITH TRACK IN SERVICE. ALL WORK IN STAGE 3 SHALL BE PERFORMED BY THE CONTRACTOR UNLESS NOTED OTHERWISE.

1. EXCAVATE TO LIMIT SHOWN FOR PLACEMENT OF GRANULAR FILL, AND RIPRAP.
2. PLACE RIPRAP ALONG SLOPE AND RIVER BANK AS SHOWN ON THE PLANS. PLACE NATIVE STREAMBED MATERIAL. THE COST TO PLACE THE NATIVE STREAMBED MATERIAL SHALL BE PAID UNDER THE ITEM "EXCAVATION AND REUSE OF EXISTING CHANNEL BOTTOM MATERIAL". COMPLETE GRADING.
3. REMOVE TEMPORARY FILL MATERIAL AND GEOTEXTILE FROM EXISTING SLOPE. REGRADE, AND RESTORE DISTURBED AREA. SEE LANDSCAPE DESIGN SHEET FOR DETAILS ON DISTURBED AREA RESTORATION.
4. PLACE BOULDERS AT DOWNSTREAM CORNERS OF ABUTMENTS 1 AND 2, AS SHOWN ON THE PLANS.
5. REMOVE COFFERDAMS AFTER RIPRAP PLACEMENT.

REV.	DATE	REVISION DESCRIPTION	SHEET NO.
-	-	-	-
-	-	-	-
-	-	-	-
-	-	-	-
-	-	-	-
-	-	-	-

THE INFORMATION, INCLUDING ESTIMATED QUANTITIES OF WORK, SHOWN ON THESE SHEETS IS BASED ON LIMITED INVESTIGATIONS BY THE STATE AND IS IN NO WAY WARRANTED TO INDICATE THE CONDITIONS OF ACTUAL QUANTITIES OF WORK WHICH WILL BE REQUIRED.

PLOTTED: 7/25/2018

DESIGNER/DRAFTER: BC/CR
CHECKED BY: RB
SCALE IN FEET 0 10 20
SCALE 1"=10'

STATE OF CONNECTICUT
DEPARTMENT OF TRANSPORTATION

FILENAME: ...\SB_MSH_170_3192_MP_44.50_S-009.dgn

LOCHNER
H.W. LOCHNER, INC
55 Hartland St
East Hartford, CT 06108

APPROVED BY: R. BRAY DATE: 12/06/17

STATE OF CONNECTICUT RICHARD A. BRAY LICENSED PROFESSIONAL ENGINEER

PROJECT TITLE:
BRIDGE NO. 09223R HOUSATONIC RAILROAD MP 44.50 OVER THE HOLLENBECK RIVER

TOWN: **CANAAN**

DRAWING TITLE: **STAGE CONSTRUCTION-2**

PROJECT NO. **170-3192**
DRAWING NO. **S4-9**
SHEET NO. **03.04.10**

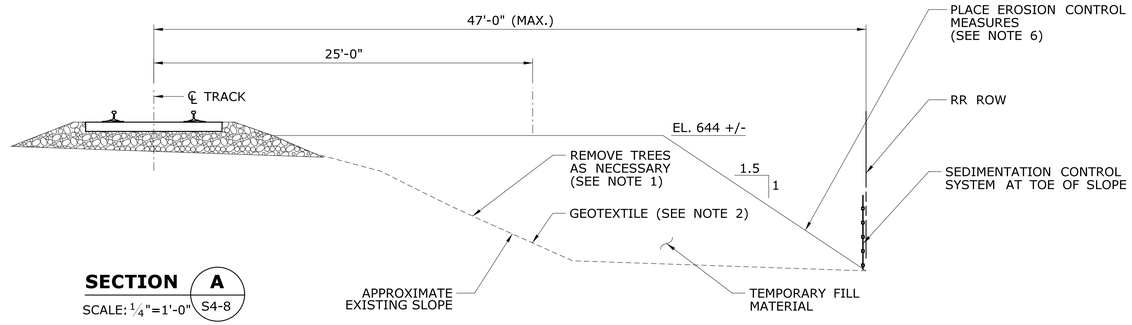

SECTION A (S4-8)
SCALE: 1/4"=1'-0"

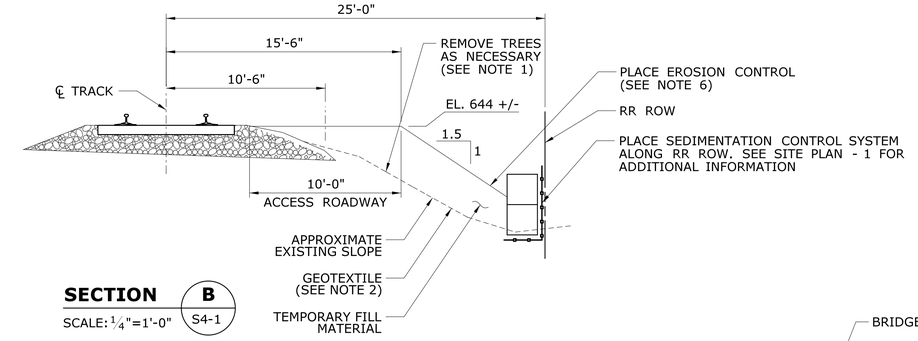

SECTION B (S4-1)
SCALE: 1/4"=1'-0"

NOTES

1. THE REMOVAL OF TREES FOR PLACEMENT OF TEMPORARY FILL MATERIAL FOR THE CONSTRUCTION OF CONSTRUCTION STAGING AREAS SHALL BE PAID AS ITEM "SELECTIVE CLEARING AND THINNING (SITE NO. 4). STUMPS SHALL BE LEFT IN PLACE.
2. PLACE GEOTEXTILE BETWEEN NATIVE SOIL AND FILL PLACED WITHIN THE WETLAND AREAS FOR THE CONSTRUCTION ACCESS ROADWAY. FOLLOWING CONSTRUCTION, GEOTEXTILE SHALL BE REMOVED. COST OF THE GEOTEXTILE SHALL BE INCLUDED IN THE PAY ITEM "CONSTRUCTION ACCESS".
3. THE CONTRACTOR SHALL PROVIDE SUFFICIENT CLEARANCE TO REMOVE TIMBER PILE AT CHANNEL EXISTING GRADE. THIS DIMENSION WILL BE DETERMINED BY THE EQUIPMENT CHOSEN FOR THE REMOVAL.
4. WATER DIVERSION SYSTEM WILL BE PLACED AS SHOWN, OR AS APPROVED BY THE ENGINEER. THE SYSTEM SHALL PROVIDE FULL ENCLOSURE OF THE EXISTING TIMBER PILES. THE DIVERSION SYSTEM SHALL PREVENT DEBRIS FROM LEAVING THE WORK AREA DURING CUTTING AND REMOVAL OF EXISTING TIMBER PILES. TIMBER PIERS SHALL BE REMOVED ONE AT A TIME. WATER DIVERSION SYSTEM SHALL NOT ENCLOSE MORE THAN ONE PILE GROUP.
5. SHEET PILES BEYOND THE LIMITS OF THE PILE CAP SHALL BE CUT 3 FEET BELOW THE BOTTOM OF TIES.
6. THE COST OF EROSION CONTROL PLACED ON THE SLOPED FACE OF TEMPORARY FILL MATERIAL SHALL BE PAID UNDER THE ITEM "CONSTRUCTION ACCESS".
7. REMOVE SHEET PILE TO EDGE OF BACKWALL. NOTCH TO ALLOW PLACEMENT OF PROPOSED CONCRETE BACKWALL.
8. THE CONTRACTOR SHALL PROVIDE FALL PROTECTION FOR SAFETY OF ALL WORKERS, INCLUDING RAIL PERSONNEL. THE CONTRACTOR SHALL COORDINATE SAFETY REQUIREMENTS WITH THE ENGINEER. FALL PROTECTION SHALL NOT INTERFERE WITH RAIL OPERATIONS. THE COST TO PROVIDE WORKER SAFETY MEASURES SHALL BE INCLUDED WITH THE ITEM "CONSTRUCTION ACCESS".

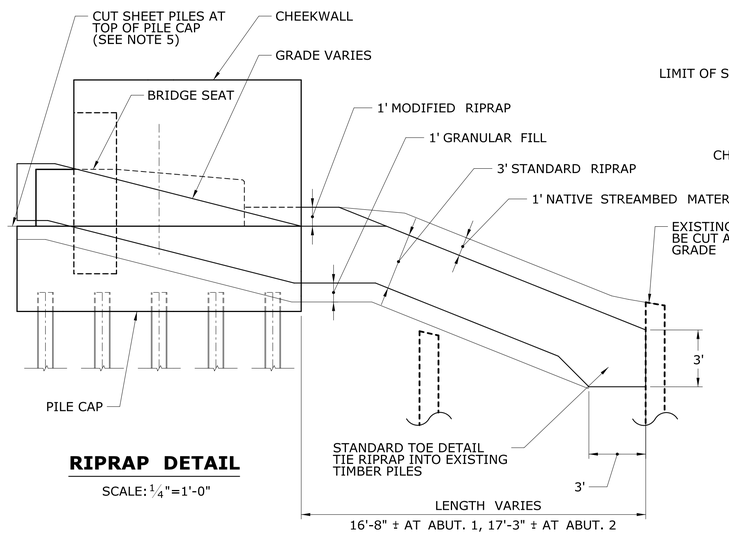

RIPRAP DETAIL
SCALE: 1/4"=1'-0"

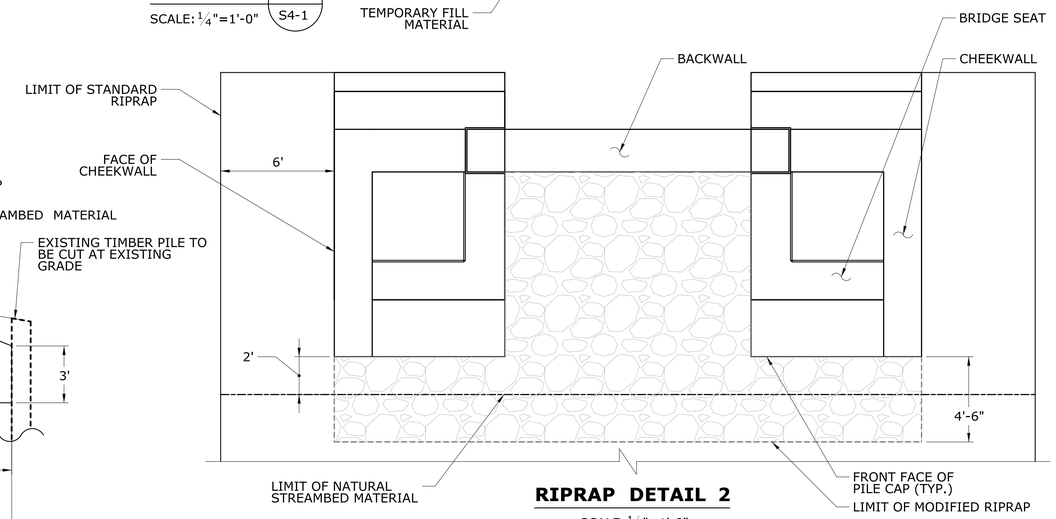

RIPRAP DETAIL 2
SCALE: 1/4"=1'-0"

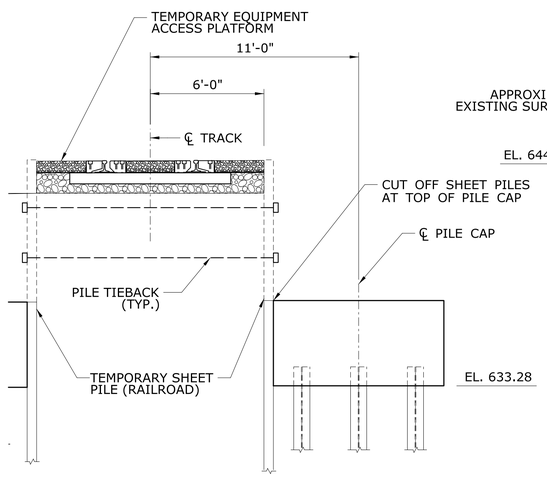

SECTION C (S4-8)
SCALE: 1/4"=1'-0"

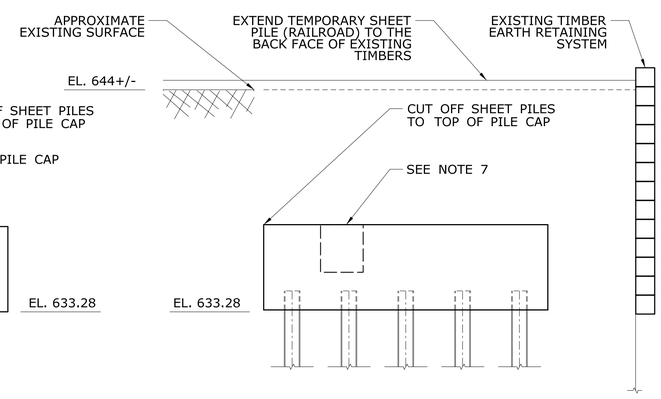

NOTE

SECTIONS SHOWN WILL BE SIMILAR FOR ALL PILE CAPS. SEE DWG. "ABUTMENTS 1 & 2" FOR ADDITIONAL INFORMATION.

SECTION D (S4-8)
SCALE: 1/4"=1'-0"

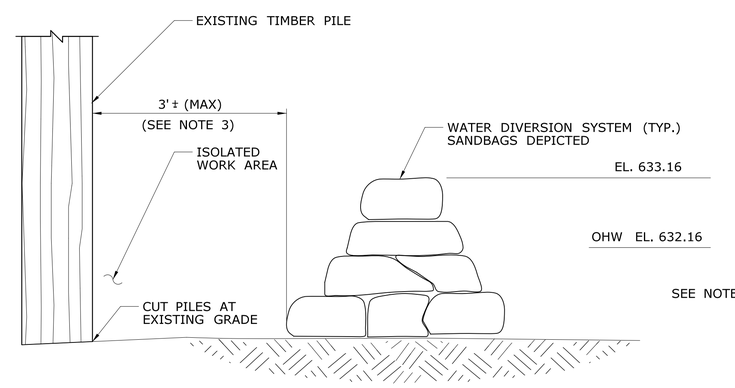

SECTION A (--)
N.T.S.

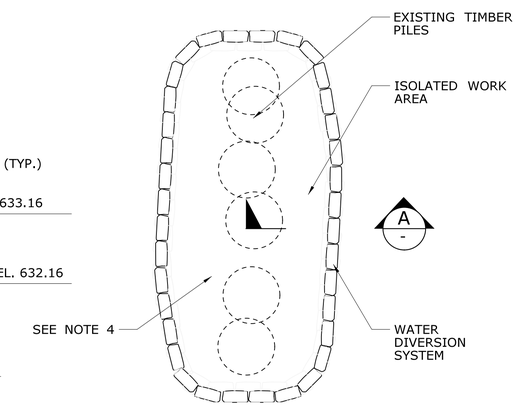

WATER DIVERSION SYSTEM
SCALE: 1/4"=1'-0"

REV.	DATE	REVISION DESCRIPTION	SHEET NO.
-	-	-	-
-	-	-	-
-	-	-	-
-	-	-	-
-	-	-	-
-	-	-	-

THE INFORMATION, INCLUDING ESTIMATED QUANTITIES OF WORK, SHOWN ON THESE SHEETS IS BASED ON LIMITED INVESTIGATIONS BY THE STATE AND IS IN NO WAY WARRANTED TO INDICATE THE CONDITIONS OF ACTUAL QUANTITIES OF WORK WHICH WILL BE REQUIRED.

PLOTTED: 7/25/2018

DESIGNER/DRAFTER: BC/CR
CHECKED BY: RB
SCALE AS NOTED

STATE OF CONNECTICUT
DEPARTMENT OF TRANSPORTATION

FILENAME: ...\SB_MSH_170_3192_MP_44.50_S-010.dgn

LOCHNER
H.W. LOCHNER, INC
55 Hartland St
East Hartford, CT 06108

APPROVED BY: R. BRAY
DATE: 12/06/17

STATE OF CONNECTICUT RICHARD A. BRAY LICENSED PROFESSIONAL ENGINEER

PROJECT TITLE:
BRIDGE NO. 09223R HOUSATONIC RAILROAD MP 44.50 OVER THE HOLLENBECK RIVER

TOWN: **CANAAN**

DRAWING TITLE:
DRAINAGE DETAILS CONSTRUCTION DETAILS

PROJECT NO. **170-3192**
DRAWING NO. **S4-10**
SHEET NO. **03.04.11**

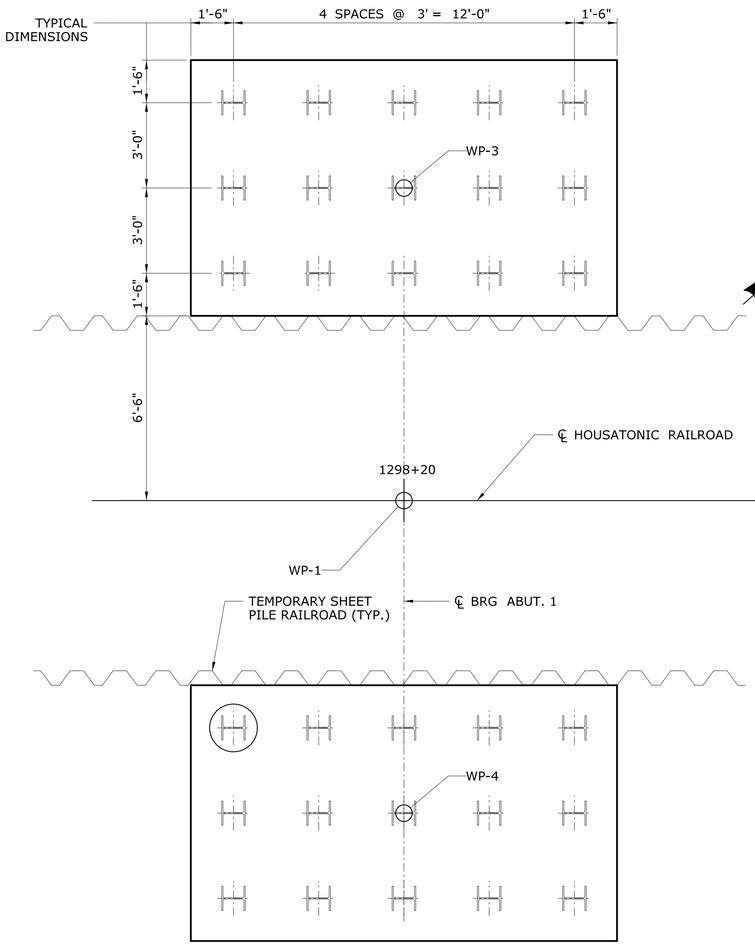

ABUTMENT 1 PLAN

SCALE: 3/8" = 1'-0"

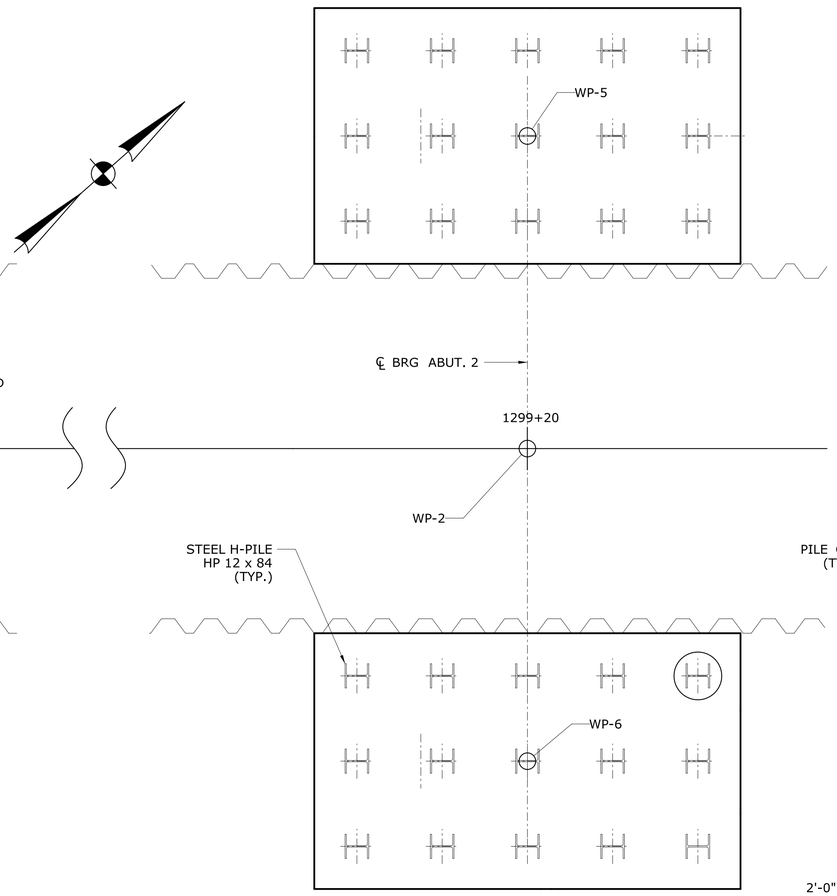

ABUTMENT 2 PLAN

SCALE: 3/8" = 1'-0"

NOTES

1. STEEL H-PILES SHALL CONFORM TO ASTM A709 GRADE 50.
2. PRIOR TO DRIVING PILES, THE CONTRACTOR SHALL SUBMIT TO THE ENGINEER FOR REVIEW AND APPROVAL OF HIS METHOD AND SEQUENCE OF PILE DRIVING.
3. HIGH STRENGTH, LOW ALLOY, CAST STEEL PILE TIP REINFORCEMENT WITH INTEGRALLY CAST CUTTING TEETH SHALL BE PROVIDED FOR EACH PILE. THE COST TO PROVIDE TIP REINFORCEMENT SHALL BE PAID UNDER THE ITEM "POINT REINFORCEMENT FOR STEEL PILES."
4. PRIOR TO DRIVING PILES, THE CONTRACTOR SHALL SUBMIT PILE TIP REINFORCEMENT DETAILS TO THE ENGINEER FOR REVIEW AND APPROVAL.
5. FOR COORDINATES OF WORKING POINTS, SEE LAYOUT PLAN AND TRACK PROFILE DRAWING.
6. FOR BORING LOGS, SEE BORING LOGS 1 AND BORING LOGS 2.
7. BASED ON SITE SOIL CONDITIONS ENCOUNTERED DURING THE BORING PROGRAM, THE CONTRACTOR SHOULD ASSUME THAT THE H-PILES WILL BE DRIVEN TO REFUSAL AT SOUND BEDROCK.
8. TEST PILES INDICATED ON PLANS SHALL BE USED TO VERIFY ORDER LENGTHS AND DRIVING ASSUMPTIONS.
9. THE QUANTITY OF PILE DRIVING ANALYZER (PDA) TESTING SHALL BE AS SHOWN IN THE PILE SCHEDULE. WHERE MORE PDA TESTS ARE REQUIRED THAN TEST PILES FOR A SUBSTRUCTURE UNIT, PERFORM PDA TESTING ON ADDITIONAL PILE(S) WITHIN THE PILE CAP AS FAR FROM THE TEST PILE(S) AS PRACTICAL.

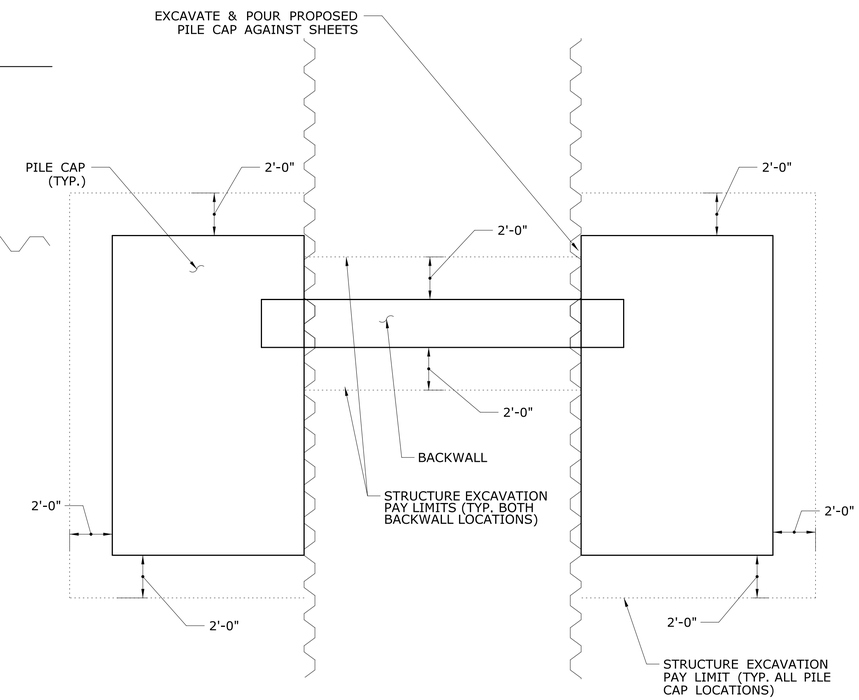

STRUCTURE EXCAVATION PAY LIMIT DETAIL

N.T.S.

LEGEND

VERTICAL PILE

TEST PILE (SEE NOTE 8)

PILE SCHEDULE

LOCATION	PILE QUANTITY	PILE CUT OFF ELEVATION (FT)	ESTIMATED PILE LENGTH (FT)	TEST PILE LENGTH (FT)	ULTIMATE PILE CAPACITY (KIP)	MAXIMUM PILE DESIGN LOAD (KIP)		QUANTITY PDA TESTS (SEE NOTE 8)
						STRENGTH I	SERVICE I	
ABUTMENT 1	30	634.28	60	90	388	66	45	1
ABUTMENT 2	30	634.36	70	90	388	66	45	1

REV.	DATE	REVISION DESCRIPTION	SHEET NO.
-	-	-	-
-	-	-	-
-	-	-	-
-	-	-	-
-	-	-	-
-	-	-	-

THE INFORMATION, INCLUDING ESTIMATED QUANTITIES OF WORK, SHOWN ON THESE SHEETS IS BASED ON LIMITED INVESTIGATIONS BY THE STATE AND IS IN NO WAY WARRANTED TO INDICATE THE CONDITIONS OF ACTUAL QUANTITIES OF WORK WHICH WILL BE REQUIRED.

PLOTTED: 7/25/2018

DESIGNER/DRAFTER: BC/CR

CHECKED BY: RB

SCALE AS NOTED

STATE OF CONNECTICUT
DEPARTMENT OF TRANSPORTATION

FILENAME: ...\SB_MSH_170_3192_MP_44.50_S-011.dgn

LOCHNER
H.W. LOCHNER, INC
55 Hartland St
East Hartford, CT 06108

APPROVED BY: R. BRAY DATE: 12/06/17

STATE OF CONNECTICUT RICHARD A. BRAY LICENSED PROFESSIONAL ENGINEER

PROJECT TITLE:
BRIDGE NO. 09223R HOUSATONIC RAILROAD MP 44.50 OVER THE HOLLENBECK RIVER

TOWN: **CANAAN**

DRAWING TITLE: **PILE LAYOUT**

PROJECT NO. **170-3192**

DRAWING NO. **S4-11**

SHEET NO. **03.04.12**

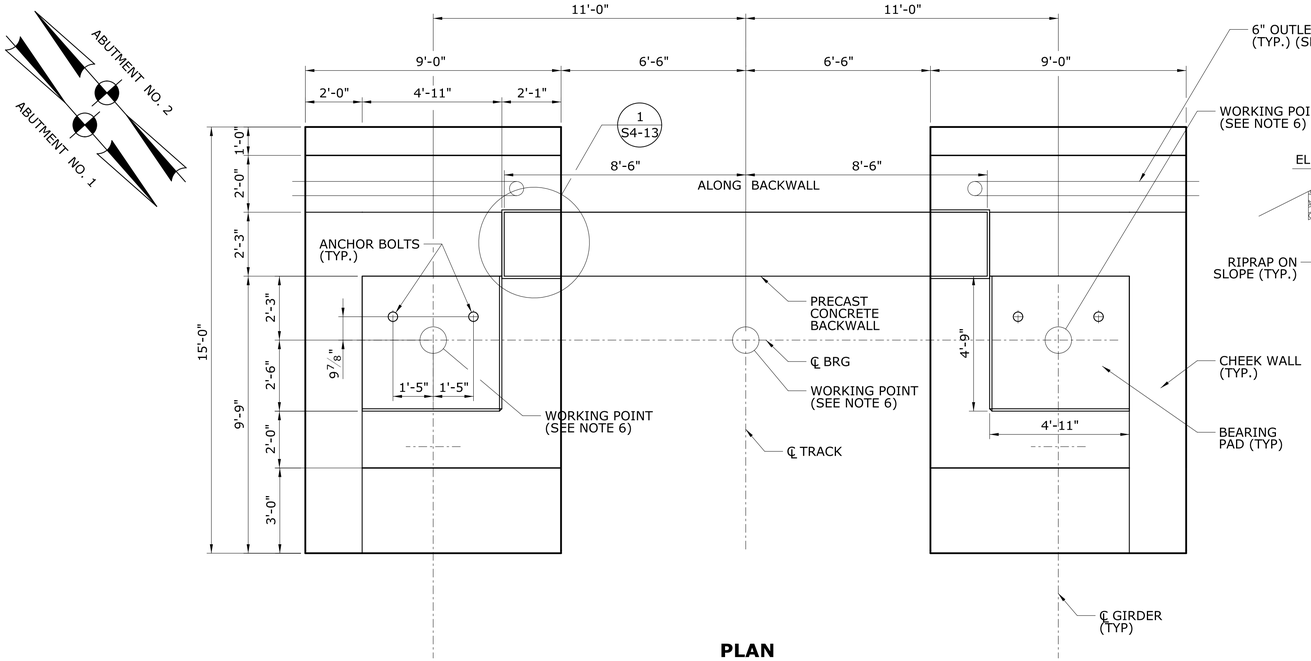

PLAN

SCALE: 3/8" = 1'-0"

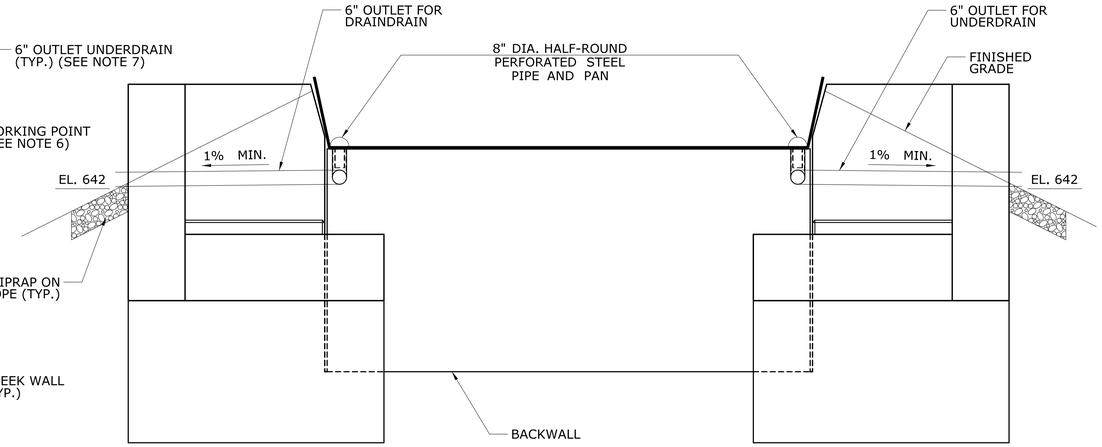

DRAINAGE BEHIND ABUTMENTS (TYP.)

SCALE: 3/8" = 1'-0"

NOTES:

1. THE HALF-ROUND PERFORATED PIPE AND PAN SHALL BE FABRICATED FROM 12 GAGE STOCK.
2. THE HALF-PIPE SHALL BE LAPPED A MINIMUM OF ONE CORRUGATION
3. THE HALF PIPES, PANS, END PLATES, AND OUTLET STUB SHALL BE HOT-DIP GALVANIZED IN ACCORDANCE WITH ASTM A123
4. THE HALF-ROUND PERFORATED PIPE AND PAN, INCLUDING PLATES AND BOLTS SHALL BE PAID FOR UNDER THE ITEM "8" HALF ROUND STEEL DRAINAGE PIPE"
5. FOR ADDITIONAL DRAINAGE DETAILS, SEE GIRDER DETAILS - 4 DRAWING.
6. FOR WORKING POINT (WP) LABELS AND COORDINATES, SEE LAYOUT PLAN AND TRACK PROFILE DRAWING.
7. LAYOUT OF 6" OUTLET FOR UNDERDRAIN TO BE AS DIRECTED BY THE ENGINEER.

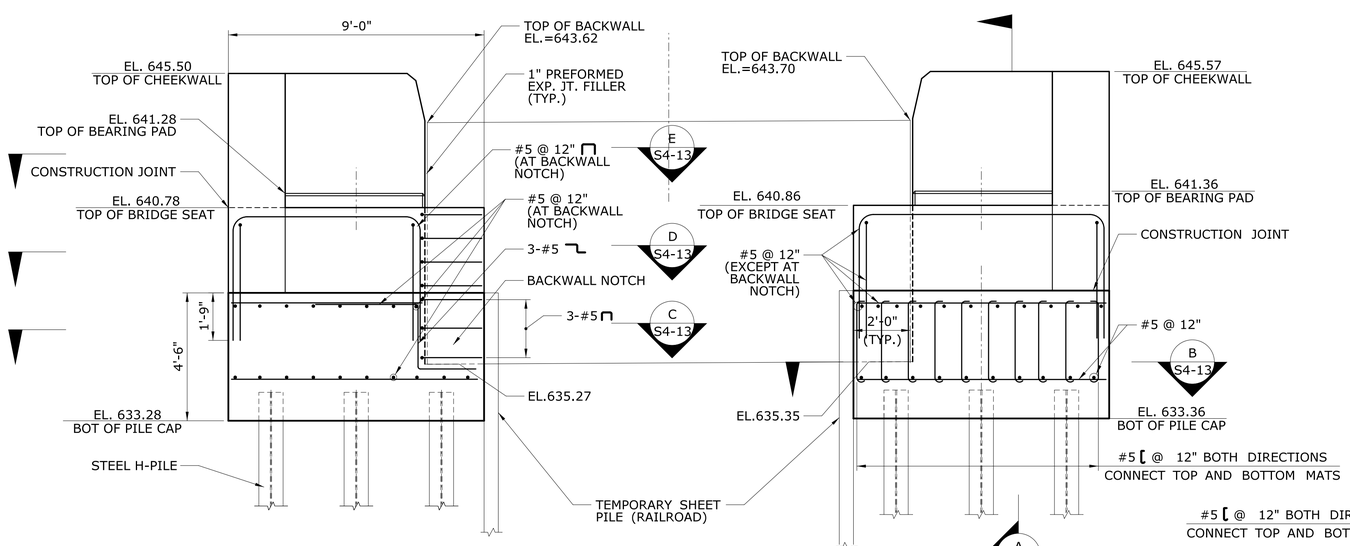

ELEVATION

SCALE: 3/8" = 1'-0"

ABUTMENT 1

ABUTMENT 2

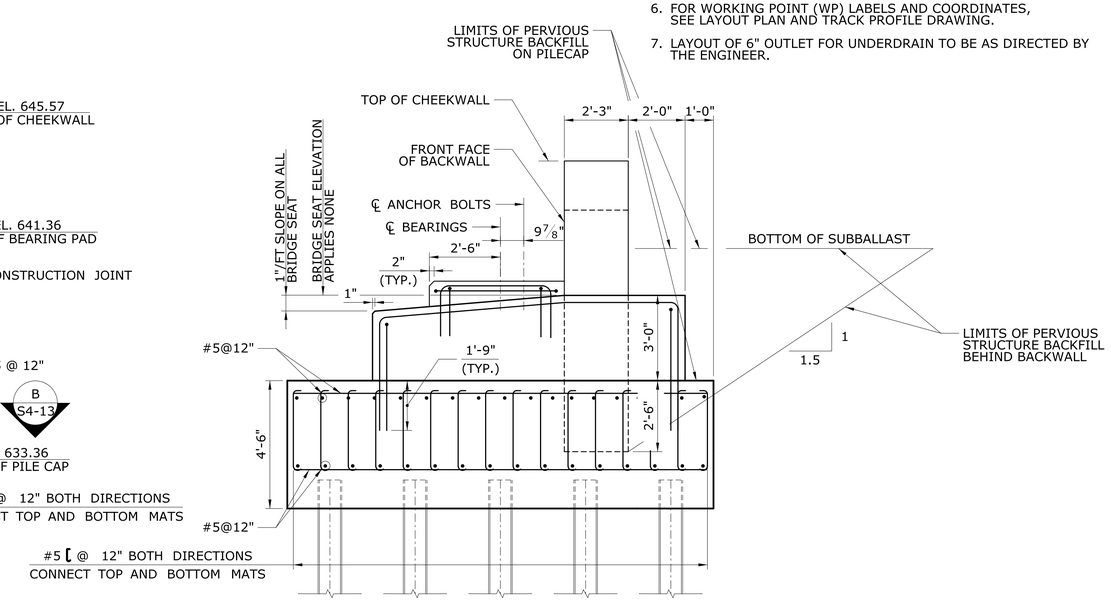

SECTION A

SCALE: 3/8" = 1'-0"

REV.	DATE	REVISION DESCRIPTION	SHEET NO.
-	-	-	-
-	-	-	-
-	-	-	-
-	-	-	-
-	-	-	-
-	-	-	-

THE INFORMATION, INCLUDING ESTIMATED QUANTITIES OF WORK, SHOWN ON THESE SHEETS IS BASED ON LIMITED INVESTIGATIONS BY THE STATE AND IS IN NO WAY WARRANTED TO INDICATE THE CONDITIONS OF ACTUAL QUANTITIES OF WORK WHICH WILL BE REQUIRED.

PLOTTED: 7/25/2018

DESIGNER/DRAFTER: BC/CR

CHECKED BY: RB

SCALE AS NOTED

STATE OF CONNECTICUT
DEPARTMENT OF TRANSPORTATION

FILENAME: ...\SB_MSH_170_3192_MP_44.50_S-012.dgn

LOCHNER
H.W. LOCHNER, INC
55 Hartland St
East Hartford, CT 06108

APPROVED BY: R. BRAY DATE: 12/06/17

STATE OF CONNECTICUT RICHARD A. BRAY LICENSED PROFESSIONAL ENGINEER

PROJECT TITLE:
BRIDGE NO. 09223R HOUSATONIC RAILROAD MP 44.50 OVER THE HOLLENBECK RIVER

TOWN: **CANAAN**

DRAWING TITLE: **ABUTMENTS 1 & 2**

PROJECT NO. **170-3192**

DRAWING NO. **S4-12**

SHEET NO. **03.04.13**

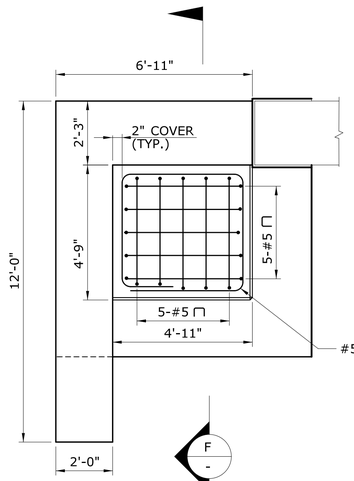

SECTION E S4-12
SCALE: 3/8" = 1'-0"

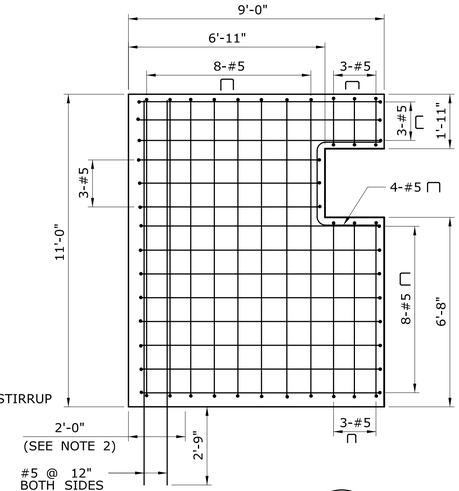

SECTION D S4-12
SCALE: 3/8" = 1'-0"

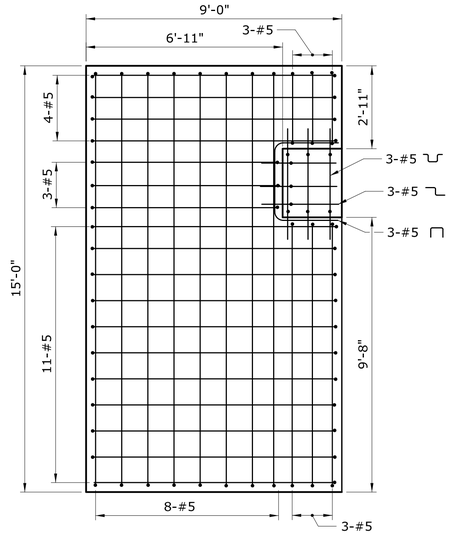

SECTION C S4-12
SCALE: 3/8" = 1'-0"

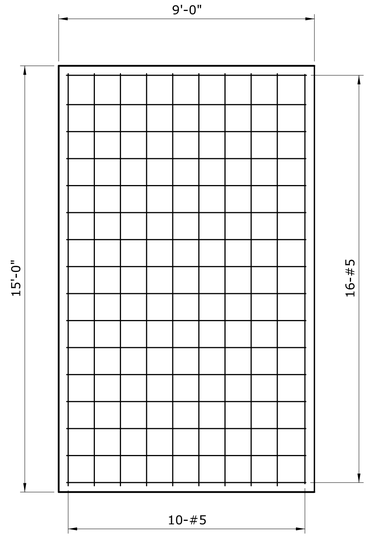

SECTION B S4-12
SCALE: 3/8" = 1'-0"

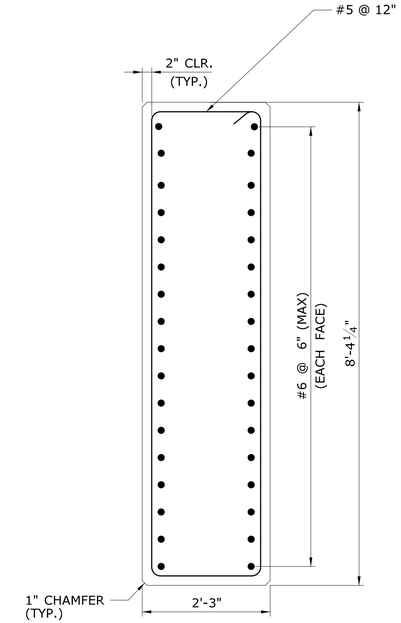

PRECAST CONCRETE BACKWALL
SCALE: 3/4" = 1'-0"

NOTES

1. ABUTMENT 1 SHOWN. ABUTMENT 2 SIMILAR AND OPPOSITE HAND.
2. CONSTRUCTION JOINT LIMITS ON FACE OF BRIDGE SEAT.
3. THE COST TO FURNISH AND INSTALL THE PRECAST CONCRETE BACKWALL SHALL BE PAID UNDER THE ITEM "PRECAST SUBSTRUCTURE ELEMENTS".

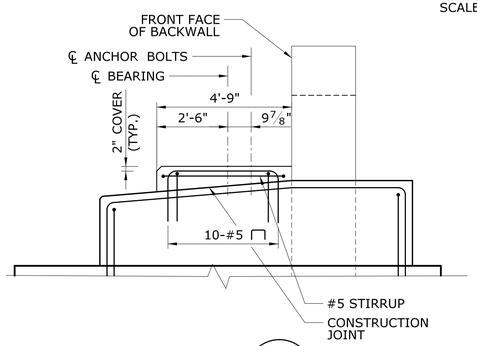

SECTION F --
SCALE: 3/8" = 1'-0"

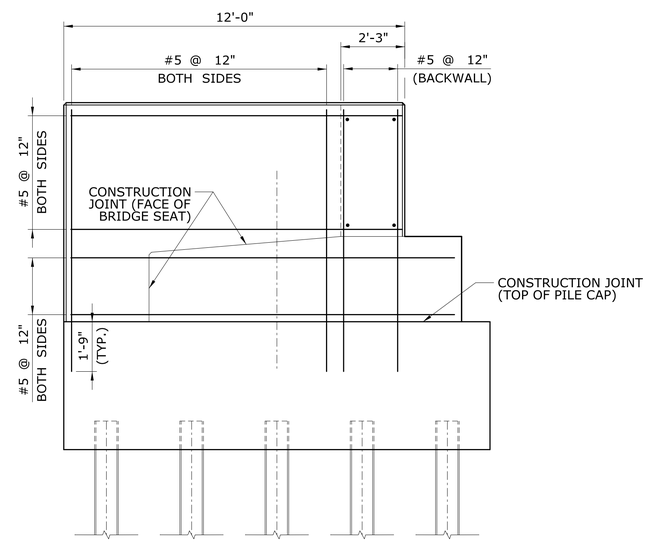

ABUTMENT ELEVATION
SCALE: 3/8" = 1'-0"

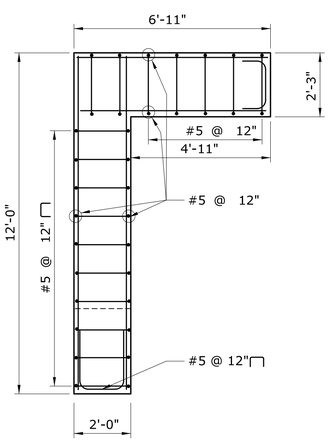

CHEEK WALL SECTION
SCALE: 3/8" = 1'-0"

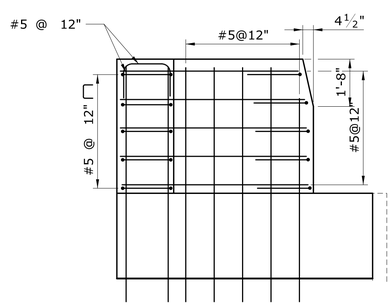

CHEEK WALL ELEVATION
SCALE: 3/8" = 1'-0"

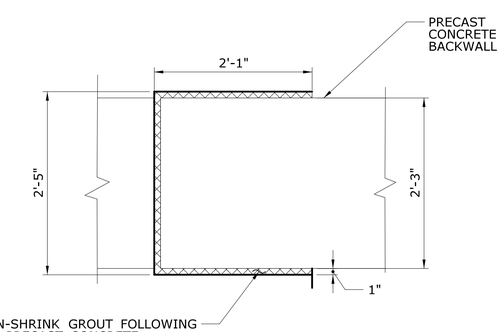

DETAIL 1 S4-12
SCALE: 1" = 1'-0"

REV.	DATE	REVISION DESCRIPTION	SHEET NO.
-	-	-	-
-	-	-	-
-	-	-	-
-	-	-	-
-	-	-	-
-	-	-	-

THE INFORMATION, INCLUDING ESTIMATED QUANTITIES OF WORK, SHOWN ON THESE SHEETS IS BASED ON LIMITED INVESTIGATIONS BY THE STATE AND IS IN NO WAY WARRANTED TO INDICATE THE CONDITIONS OF ACTUAL QUANTITIES OF WORK WHICH WILL BE REQUIRED.

PLOTTED: 7/25/2018

DESIGNER/DRAFTER: BC/CR
CHECKED BY: RB
SCALE AS NOTED

STATE OF CONNECTICUT
DEPARTMENT OF TRANSPORTATION

FILENAME: ...\SB_MSH_170_3192_MP_44.50_S-013.dgn

LOCHNER
H.W. LOCHNER, INC
55 Hartland St
East Hartford, CT 06108

APPROVED BY: R. BRAY
DATE: 12/06/17

STATE OF CONNECTICUT
RICHARD A. BRAY
LICENSED PROFESSIONAL ENGINEER

PROJECT TITLE:
BRIDGE NO. 09223R HOUSATONIC RAILROAD MP 44.50 OVER THE HOLLENBECK RIVER

TOWN: **CANAAN**

DRAWING TITLE: **ABUTMENTS 1 & 2 -2**

PROJECT NO. **170-3192**
DRAWING NO. **S4-13**
SHEET NO. **03.04.14**

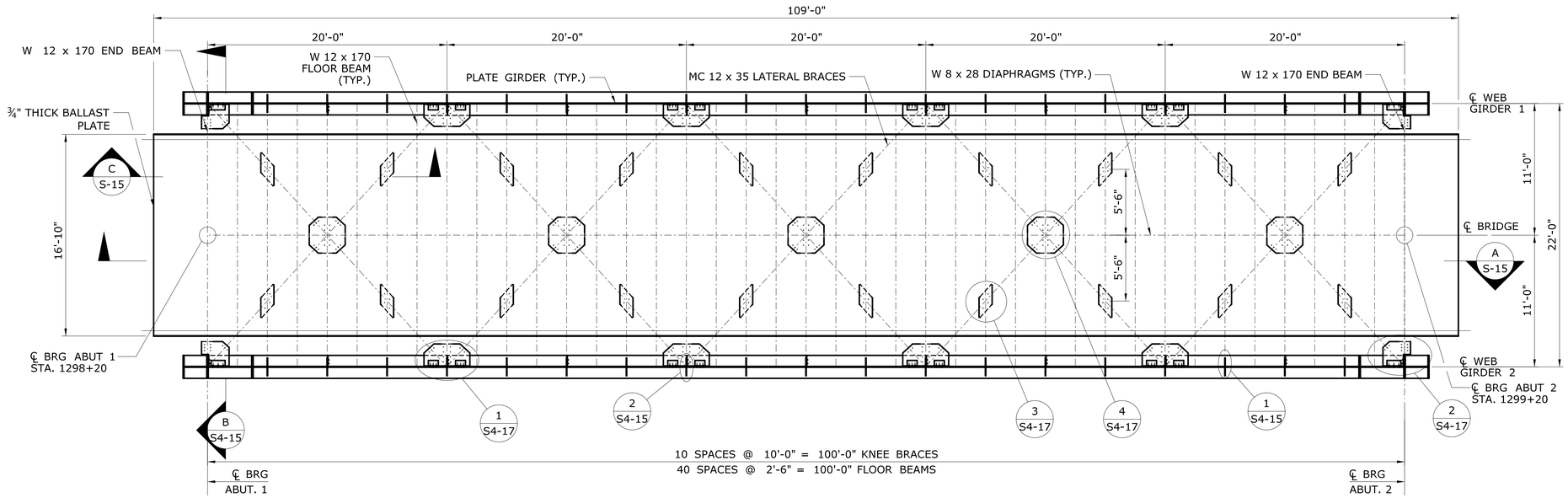

FRAMING PLAN

SCALE: 3/16" = 1'-0"

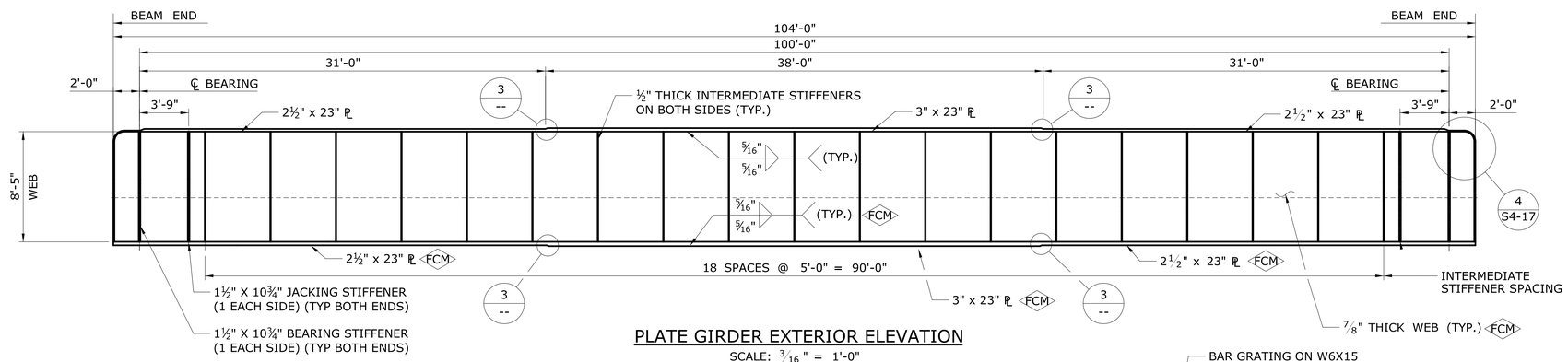

PLATE GIRDER EXTERIOR ELEVATION

SCALE: 3/16" = 1'-0"

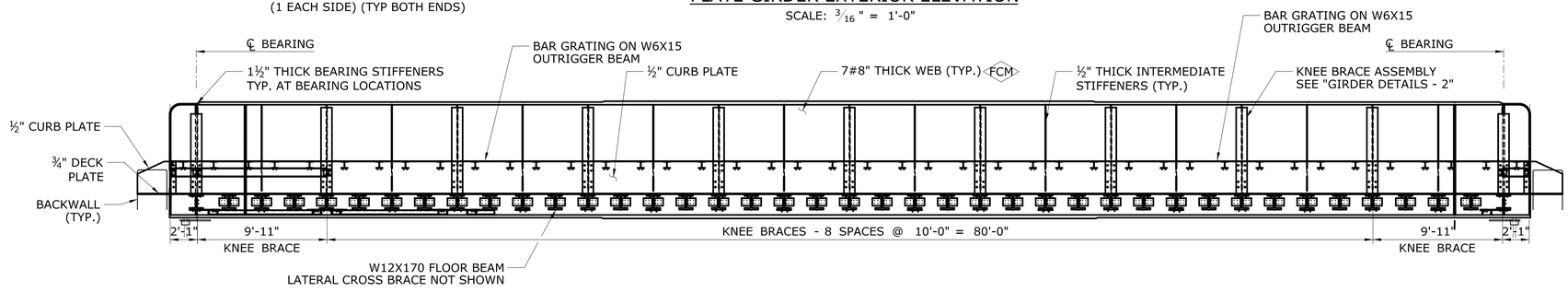

PLATE GIRDER INTERIOR ELEVATION

SCALE: 3/16" = 1'-0"

FRAMING NOTES:

1. ALL DIMENSIONS ARE HORIZONTAL AND MEASURED ALONG THE CENTERLINE OF THE WEB.
2. BEARING AND JACKING STIFFENERS SHALL BE PROVIDED ON BOTH SIDES OF THE WEB.

STRUCTURAL STEEL NOTES:

1. STRUCTURAL STEEL (LOW ALLOY) SHALL CONFORM TO AASHTO M270, GRADE 50 WF2.
2. WELDING DETAILS, PROCEDURES AND TESTING METHODS SHALL CONFORM TO THE ANSI/AASHTO/AWS D1.5-(LATEST EDITION), WITH CURRENT REVISIONS, BRIDGE WELDING CODE, UNLESS OTHERWISE NOTED ON THE PLANS.
3. FIELD SPLICES WILL NOT BE ALLOWED EXCEPT WITH THE WRITTEN PERMISSION OF THE ENGINEER PRIOR TO THE SUBMISSION OF SHOP DRAWINGS. IF ALLOWED, THESE SPLICES SHALL BE DESIGNED BY THE CONTRACTOR AND APPROVED BY THE ENGINEER. THE COST OF THESE SPLICES, INCLUDING THE COST OF DESIGN, SHALL BE AT NO EXTRA EXPENSE TO THE STATE.
4. ALL WEB TO FLANGE, WEB TO BEARING STIFFENER AND BEARING STIFFENER TO FLANGE FILLET WELDS SHALL BE INSPECTED BY THE MAGNETIC PARTICLE METHOD.
5. MULTIPLE PASS WELDS, INSPECTED BY THE MAGNETIC PARTICLE METHOD SHALL HAVE EACH PASS OR LAYER INSPECTED AND ACCEPTED BEFORE PROCEEDING TO THE NEXT PASS OR LAYER, AS DETERMINED BY THE ENGINEER.
6. SHOP WEB SPLICES SHALL BE LOCATED WITHIN THE MIDDLE THIRD OF THE SPAN.
7. SHOP FLANGE SPLICES SHALL BE LOCATED A MINIMUM OF SIX INCHES FROM WEB SPLICES.
8. FLANGE OR WEB SPLICES SHALL BE LOCATED A MINIMUM OF SIX INCHES FROM STIFFENERS AND CONNECTION PLATES.
9. BEARING STIFFENERS AND THE ENDS OF GIRDERS SHALL BE VERTICAL AFTER THE APPLICATION OF FULL DEAD LOADS.
10. THE STRUCTURAL STEEL FABRICATORS SHALL BE CERTIFIED UNDER THE AISC QUALITY CONTROL PROGRAM, CATEGORY MBrF - MAJOR STEEL BRIDGES.
11. THE CONTRACTOR SHALL TAKE THE PROPER PRECAUTIONS TO ENSURE THE STABILITY OF ALL STRUCTURE ELEMENTS UNTIL THE TOTAL STRUCTURE IS IN BEING.
12. THE BAR GRATING SHALL BE A HOT DIP GALVANIZED WELDED STEEL GRATING BANDED AT THE ENDS. THE BEARING BARS SHALL BE 1½" x3/16" MINIMUM. THE GRATE OPENINGS SHALL BE 1 3/16" CENTER TO CENTER OF BEARING BARS AND 4" CENTER TO CENTER OF CROSS BARS. THE GRATING PANELS SHALL BE HELD IN PLACE WITH GALVANIZED STEEL CLIPS BOLTED TO SUPPORTS.
13. THE BAR GRATING SHALL SUPPORT A UNIFORM LIVE LOAD OF 100 PSF AND A CONCENTRATED LIVE LOAD OF 300 LB WITH LESS THAN ¼" DEFLECTION.
14. THE COST OF THE BAR GRATING SHALL BE INCLUDED UNDER THE PAY ITEM "STRUCTURAL STEEL (SITE NO. 4)"
15. ALL BOLTS SHALL BE 7/8" DIAM. HIGH STRENGTH BOLTS CONFORMING TO ASTM A325, TYPE 3 UNLESS OTHERWISE NOTED.

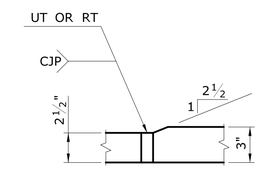

DETAIL 3 -- N.T.S.

REV.	DATE	REVISION DESCRIPTION	SHEET NO.
-	-	-	-
-	-	-	-
-	-	-	-
-	-	-	-
-	-	-	-
-	-	-	-

THE INFORMATION, INCLUDING ESTIMATED QUANTITIES OF WORK, SHOWN ON THESE SHEETS IS BASED ON LIMITED INVESTIGATIONS BY THE STATE AND IS IN NO WAY WARRANTED TO INDICATE THE CONDITIONS OF ACTUAL QUANTITIES OF WORK WHICH WILL BE REQUIRED.

PLOTTED: 7/25/2018

DESIGNER/DRAFTER: BC/CR
CHECKED BY: RB
SCALE AS NOTED

STATE OF CONNECTICUT
DEPARTMENT OF TRANSPORTATION

FILENAME: ...\SB_MSH_170_3192_MP_44.50_S-014.dgn

LOCHNER
H.W. LOCHNER, INC
55 Hartland St
East Hartford, CT 06108

APPROVED BY: R. BRAY
DATE: 12/06/17

STATE OF CONNECTICUT RICHARD A. BRAY LICENSED PROFESSIONAL ENGINEER

PROJECT TITLE:
BRIDGE NO. 09223R HOUSATONIC RAILROAD MP 44.50 OVER THE HOLLENBECK RIVER

TOWN: **CANAAN**

DRAWING TITLE: **FRAMING PLAN**

PROJECT NO. **170-3192**
DRAWING NO. **S4-14**
SHEET NO. **03.04.15**

CAMBER TABLE

GIRDER		℄ BEARING ABUTMENT 1	SPAN 1									℄ BEARING ABUTMENT 2
			1/10	2/10	3/10	4/10	5/10	6/10	7/10	8/10	9/10	
G1 (TYP)	TOTAL DEAD LOAD	0	0.21	0.39	0.53	0.60	0.63	0.60	0.53	0.39	0.21	0
	EXTRA CAMBER	0	0.33	0.62	0.84	0.95	1.00	0.95	0.84	0.62	0.33	0
	TOTAL CAMBER	0	0.54	1.01	1.37	1.55	1.63	1.55	1.37	1.01	0.54	0

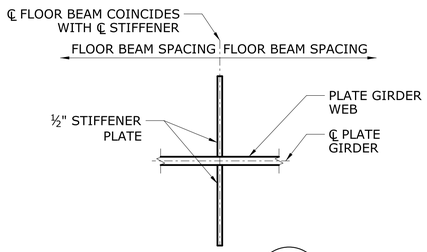

DETAIL 1 / S4-14
SCALE: 1½" = 1'-0"

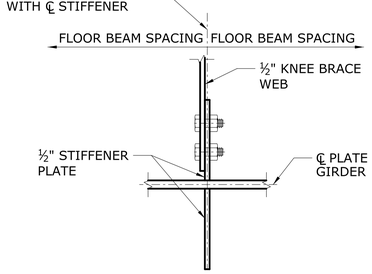

DETAIL 2 / S4-14
SCALE: 1½" = 1'-0"

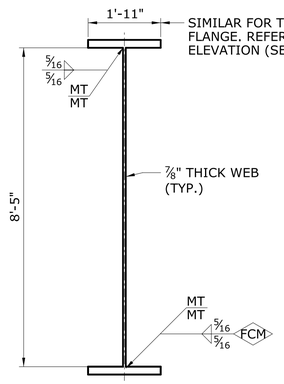

TYPICAL GIRDER SECTION
SCALE: ½" = 1'-0"

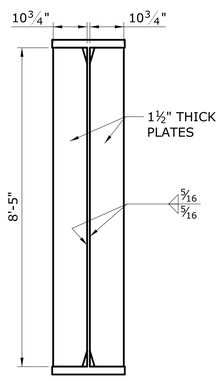

JACKING STIFFENER PLATES
SCALE: ½" = 1'-0"

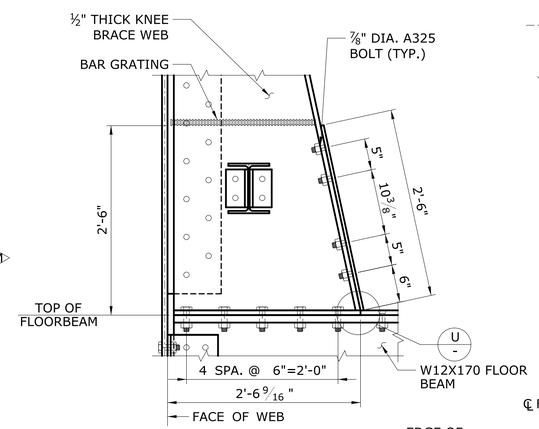

KNEE BRACE DETAIL
SCALE: 1" = 1'-0"

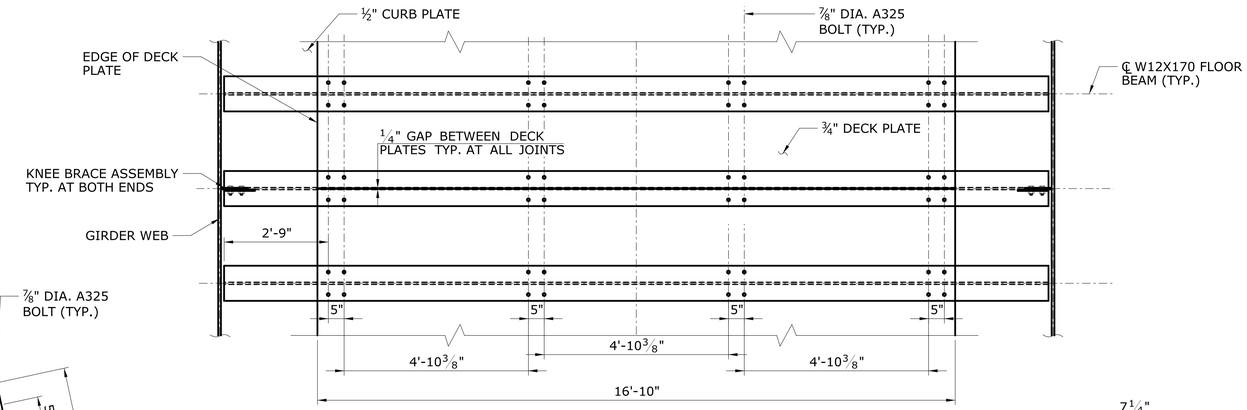

PARTIAL DECK PLAN
SCALE: ½" = 1'-0"

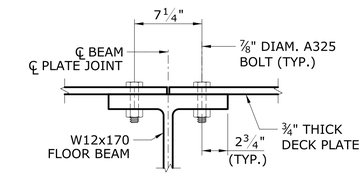

DETAIL W / --
SCALE: 1½" = 1'-0"

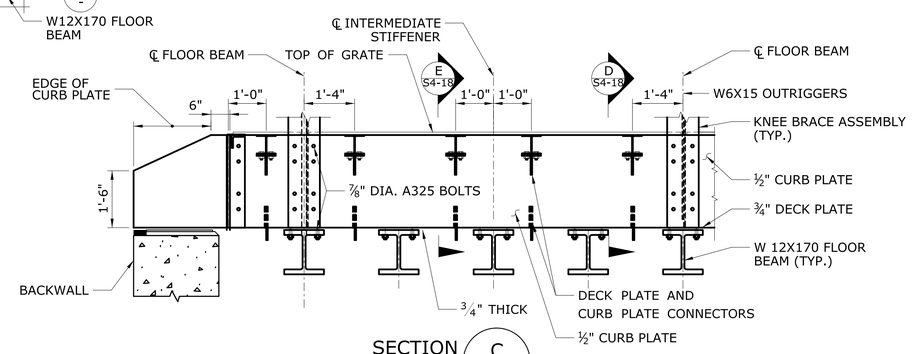

SECTION C / S4-14
SCALE: ½" = 1'-0"

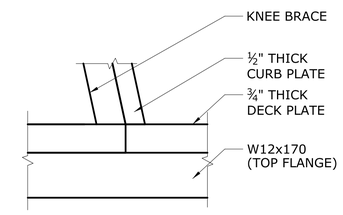

DETAIL U / --
SCALE: 6" = 1'-0"

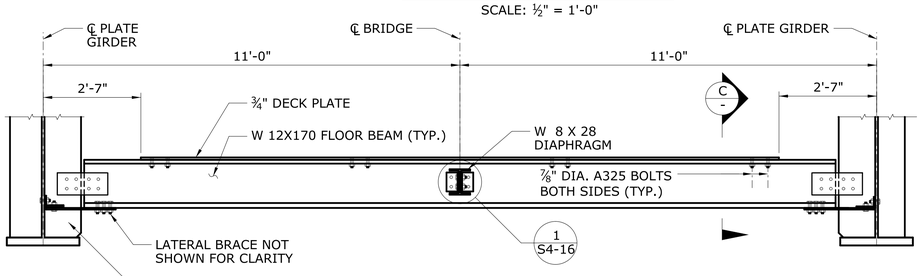

SECTION B / S4-14
SCALE: ½" = 1'-0"

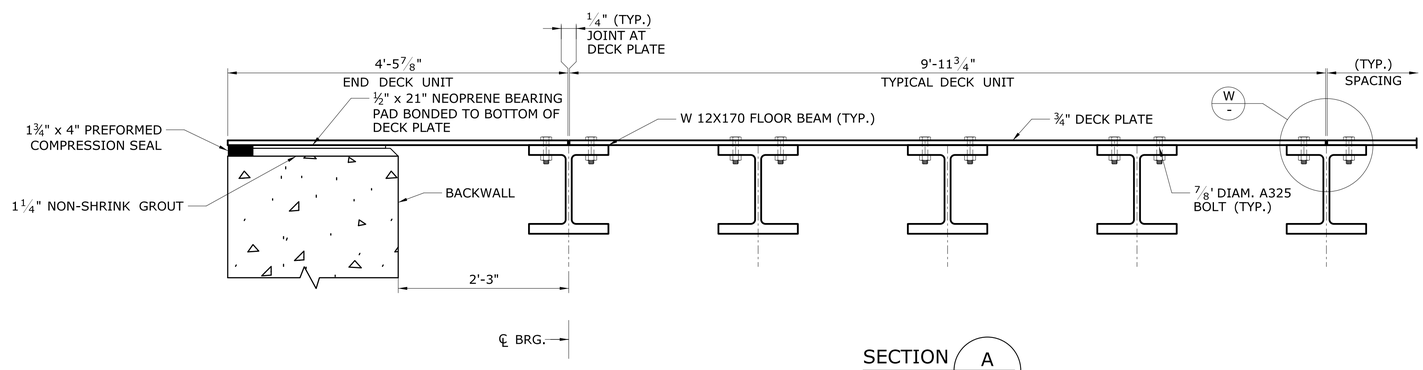

SECTION A / S4-14
SCALE: 1" = 1'-0"

REV.	DATE	REVISION DESCRIPTION	SHEET NO.
-	-	-	-
-	-	-	-
-	-	-	-
-	-	-	-
-	-	-	-
-	-	-	-

THE INFORMATION, INCLUDING ESTIMATED QUANTITIES OF WORK, SHOWN ON THESE SHEETS IS BASED ON LIMITED INVESTIGATIONS BY THE STATE AND IS IN NO WAY WARRANTED TO INDICATE THE CONDITIONS OF ACTUAL QUANTITIES OF WORK WHICH WILL BE REQUIRED.

PLOTTED: 7/25/2018

DESIGNER/DRAFTER: BC/CR
CHECKED BY: RB
SCALE AS NOTED

STATE OF CONNECTICUT
DEPARTMENT OF TRANSPORTATION

FILENAME: ...\SB_MSH_170_3192_MP_44.50_S-015.dgn

LOCHNER
H.W. LOCHNER, INC
55 Hartland St
East Hartford, CT 06108

APPROVED BY: R. BRAY
DATE: 12/06/17

STATE OF CONNECTICUT RICHARD A. BRAY LICENSED PROFESSIONAL ENGINEER

PROJECT TITLE:
BRIDGE NO. 09223R HOUSATONIC RAILROAD MP 44.50 OVER THE HOLLENBECK RIVER

TOWN: **CANAAN**

DRAWING TITLE: **GIRDER DETAILS-1**

PROJECT NO. **170-3192**
DRAWING NO. **S4-15**
SHEET NO. **03.04.16**

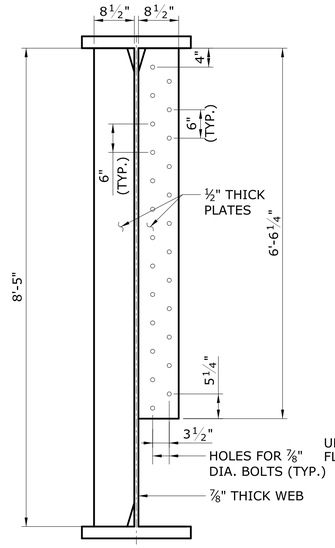

STIFFENER / CONNECTION PLATES
AT KNEE BRACE ASSEMBLY
SCALE: ¾" = 1'-0"

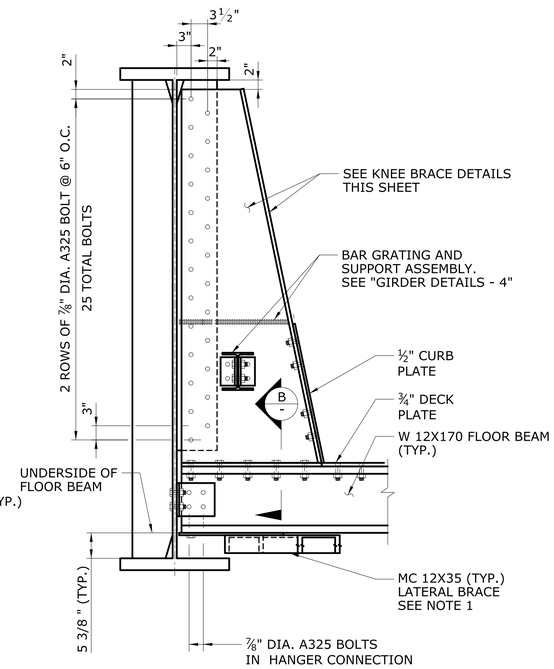

TYPICAL KNEE BRACE
ASSEMBLY DETAIL
SCALE: ¾" = 1'-0"

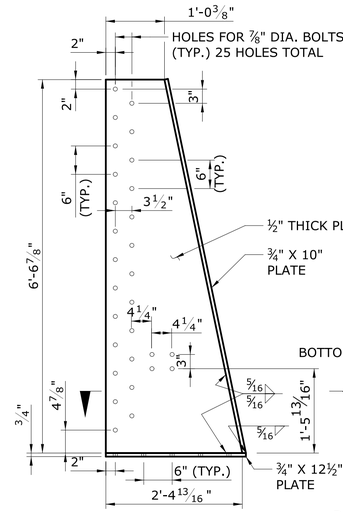

KNEE BRACE DETAILS
SCALE: ¾" = 1'-0"

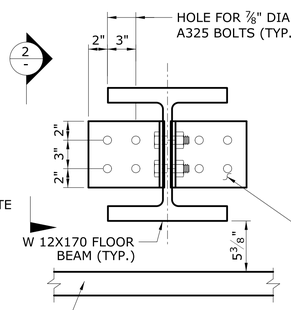

SECTION A
SCALE: 1½" = 1'-0"

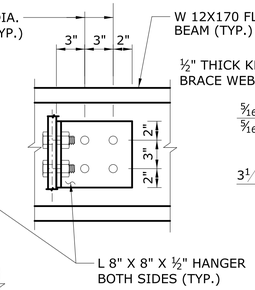

VIEW 2
SCALE: 1½" = 1'-0"

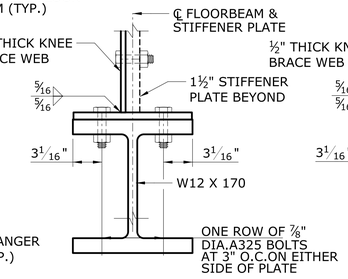

SECTION E
SCALE: 1½" = 1'-0"

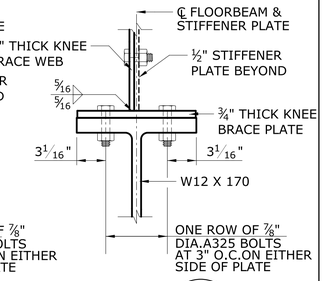

SECTION B
SCALE: 1½" = 1'-0"

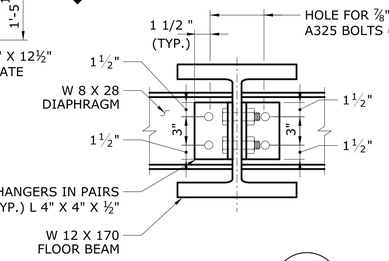

SECTION C
SCALE: 1½" = 1'-0"

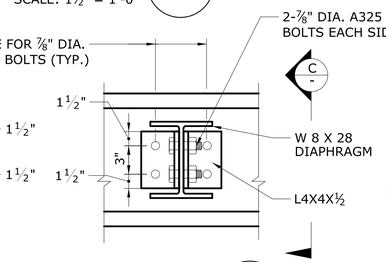

DETAIL 1 S4-15
SCALE: 1½" = 1'-0"

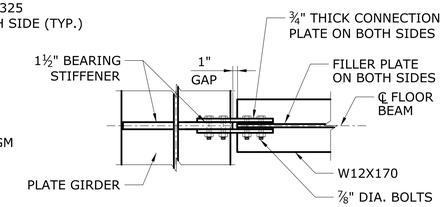

SECTION D
SCALE: ¾" = 1'-0"

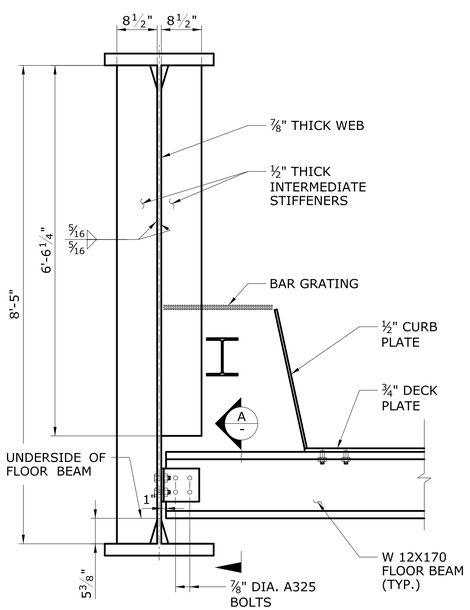

INTERMEDIATE STIFFENER PLATES
AND FLOORBEAM ASSEMBLY
SCALE:¾" = 1'-0"

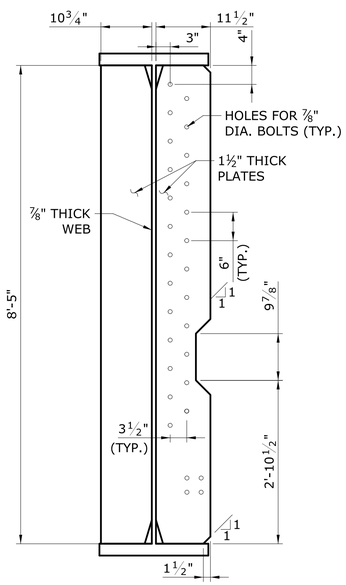

END BEARING STIFFENER PLATES
SCALE: ¾" = 1'-0"

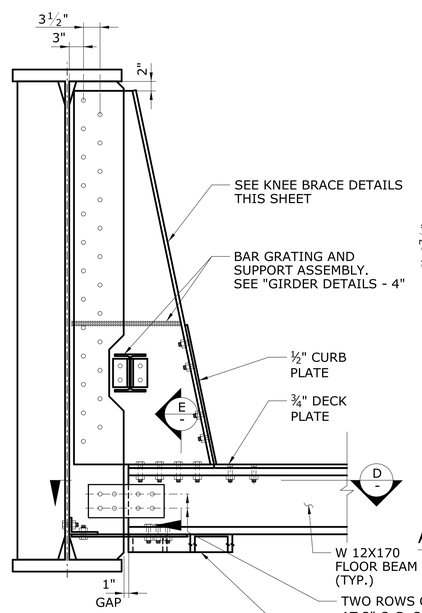

KNEE BRACE ASSEMBLY
AT END BEARING STIFFNER
SCALE: ¾" = 1'-0"

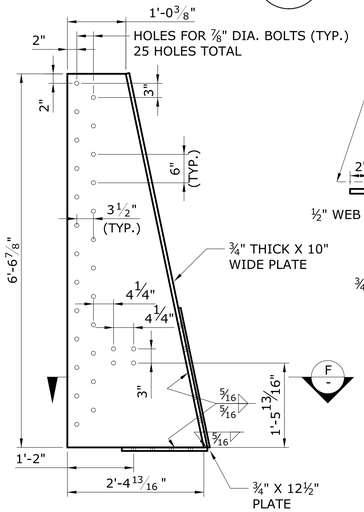

KNEE BRACE DETAIL
AT END BEARING STIFFENER
SCALE: ¾" = 1'-0"

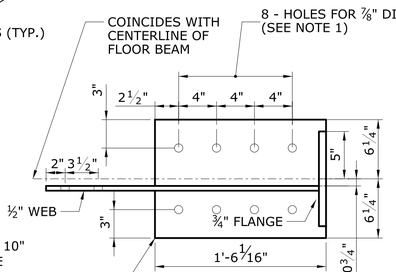

SECTION F
SCALE: 1½" = 1'-0"

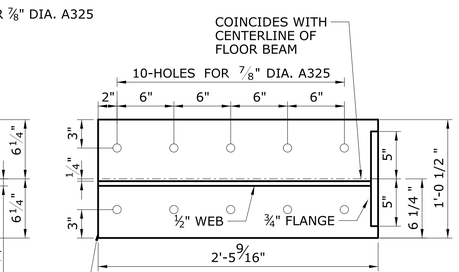

SECTION G
SCALE: 1½" = 1'-0"

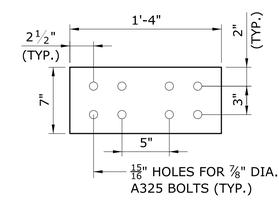

CONNECTION PLATE
SCALE: 1½" = 1'-0"

NOTES:

1. FOR LATERAL BRACE DETAILS AND CROSS BRACE CONNECTION DETAILS, REFER TO DWG. "GIRDER DETAILS - 2".
2. REFER TO "CLIP AND WELD TERMINATION DETAIL" (DWG. "GIRDER DETAILS - 2") FOR STIFFENER AND BEARING PLATES WELDING DETAILS.

REV.	DATE	REVISION DESCRIPTION	SHEET NO.
-	-	-	-
-	-	-	-
-	-	-	-
-	-	-	-
-	-	-	-
-	-	-	-

THE INFORMATION, INCLUDING ESTIMATED QUANTITIES OF WORK, SHOWN ON THESE SHEETS IS BASED ON LIMITED INVESTIGATIONS BY THE STATE AND IS IN NO WAY WARRANTED TO INDICATE THE CONDITIONS OF ACTUAL QUANTITIES OF WORK WHICH WILL BE REQUIRED.

PLOTTED: 7/25/2018

DESIGNER/DRAFTER: BC/CR
CHECKED BY: RB
SCALE AS NOTED

STATE OF CONNECTICUT
DEPARTMENT OF TRANSPORTATION

FILENAME: ...\SB_MSH_170_3192_MP_44.50_S-016.dgn

LOCHNER
H.W. LOCHNER, INC
55 Hartland St
East Hartford, CT 06108

APPROVED BY: R. BRAY
DATE: 12/06/17

STATE OF CONNECTICUT RICHARD A. BRAY LICENSED PROFESSIONAL ENGINEER

PROJECT TITLE:
BRIDGE NO. 09223R HOUSATONIC RAILROAD MP 44.50 OVER THE HOLLENBECK RIVER

TOWN: **CANAAN**

DRAWING TITLE: **GIRDER DETAILS-2**

PROJECT NO. **170-3192**
DRAWING NO. **S4-16**
SHEET NO. **03.04.17**

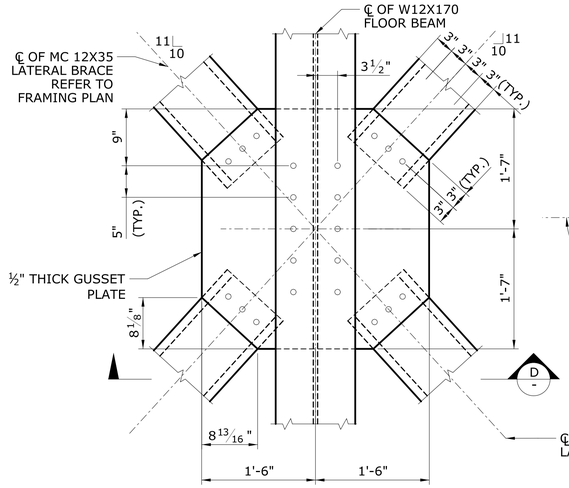

NON-CONTINUOUS CROSS BRACE PLAN
LATERAL BRACE INTERMEDIATE CONNECTION DETAILS (4 / S4-14)
SCALE: 1" = 1'-0"

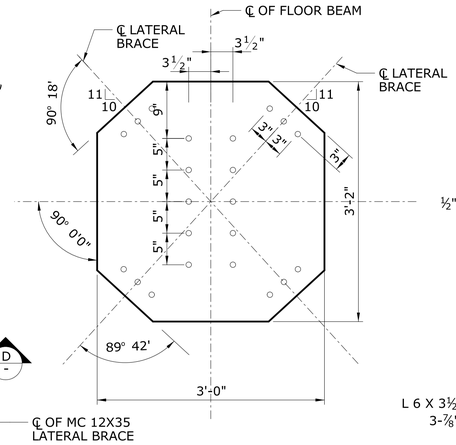

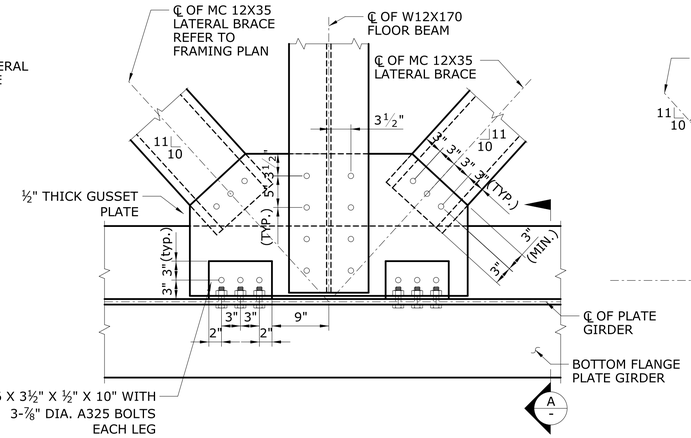

SYMMETRICAL DOUBLE CROSS BRACE PLAN (1 / S4-14)
SCALE: 1" = 1'-0"

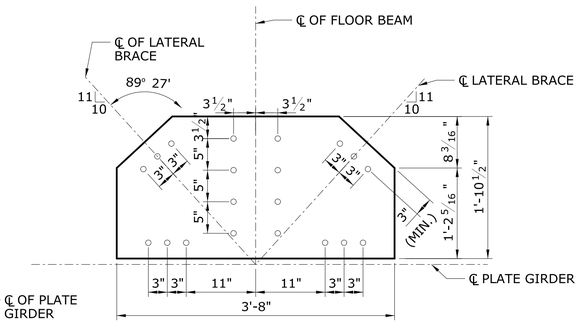

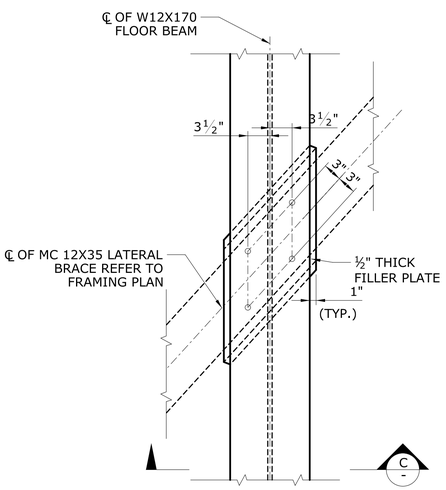

CONTINUOUS CROSS BRACE PLAN (3 / S4-14)
SCALE: 1" = 1'-0"

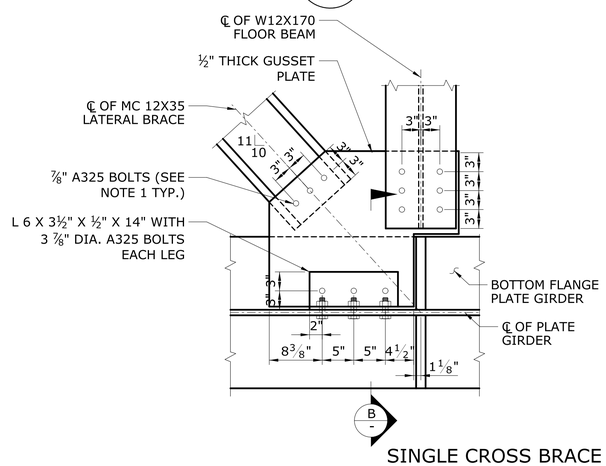

SINGLE CROSS BRACE PLAN (2 / S4-14)
SCALE: 1" = 1'-0"

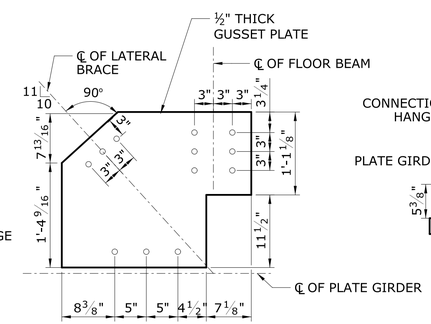

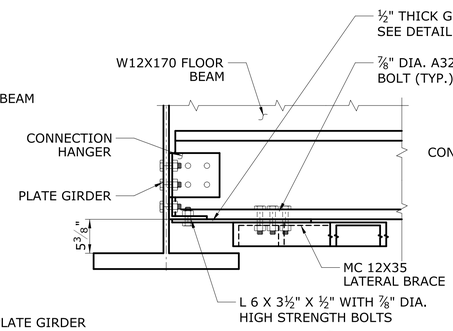

SECTION (A / --)
SCALE: 1" = 1'-0"

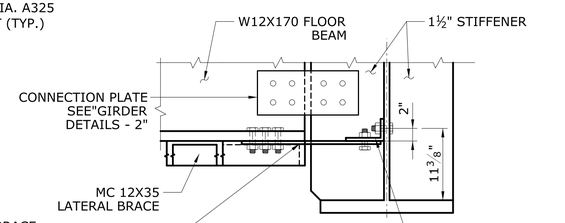

SECTION (B / --)
SCALE: 1" = 1'-0"

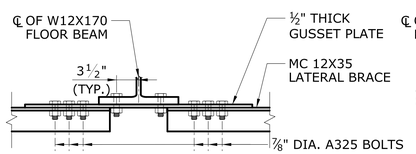

SECTION (D / --)
SCALE: 1" = 1'-0"

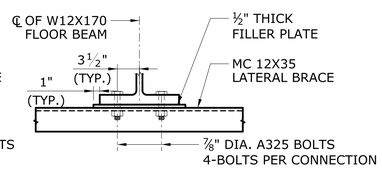

SECTION (C / --)
SCALE: 1" = 1'-0"

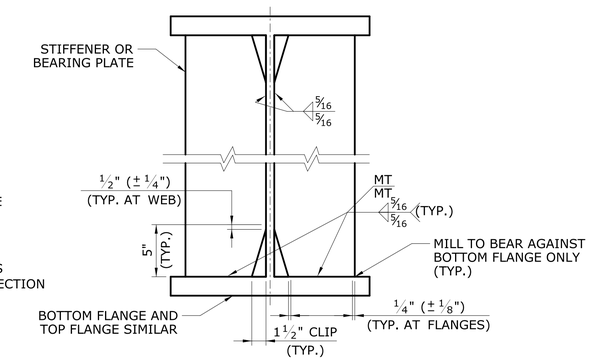

CLIP AND WELD TERMINATION DETAIL
SCALE: 1½" = 1'-0"

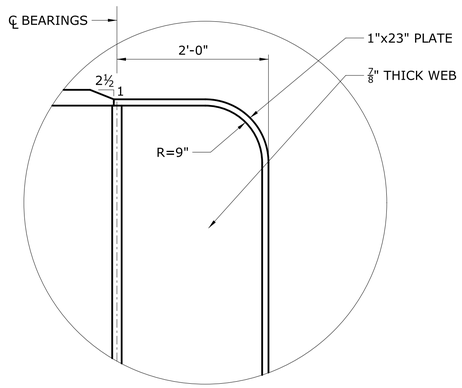

DETAIL (4 / S4-14)
SCALE: 1" = 1'-0"

NOTES

1. UNLESS NOTED OTHERWISE, USE STANDARD BOLT HOLE SIZES FOR ⅞" DIA. A325 HIGH STRENGTH BOLTS.

REV.	DATE	REVISION DESCRIPTION	SHEET NO.
-	-	-	-
-	-	-	-
-	-	-	-
-	-	-	-
-	-	-	-
-	-	-	-

THE INFORMATION, INCLUDING ESTIMATED QUANTITIES OF WORK, SHOWN ON THESE SHEETS IS BASED ON LIMITED INVESTIGATIONS BY THE STATE AND IS IN NO WAY WARRANTED TO INDICATE THE CONDITIONS OF ACTUAL QUANTITIES OF WORK WHICH WILL BE REQUIRED.

PLOTTED: 7/25/2018

DESIGNER/DRAFTER: BC/CR
CHECKED BY: RB
SCALE AS NOTED

STATE OF CONNECTICUT
DEPARTMENT OF TRANSPORTATION

FILENAME: ...\SB_MSH_170_3192_MP_44.50_S-017.dgn

LOCHNER
H.W. LOCHNER, INC
55 Hartland St
East Hartford, CT 06108

APPROVED BY: R. BRAY
DATE: 12/06/17

STATE OF CONNECTICUT RICHARD A. BRAY LICENSED PROFESSIONAL ENGINEER

PROJECT TITLE:
BRIDGE NO. 09223R HOUSATONIC RAILROAD MP 44.50 OVER THE HOLLENBECK RIVER

TOWN: **CANAAN**

DRAWING TITLE: **GIRDER DETAILS-3**

PROJECT NO. **170-3192**
DRAWING NO. **S4-17**
SHEET NO. **03.04.18**

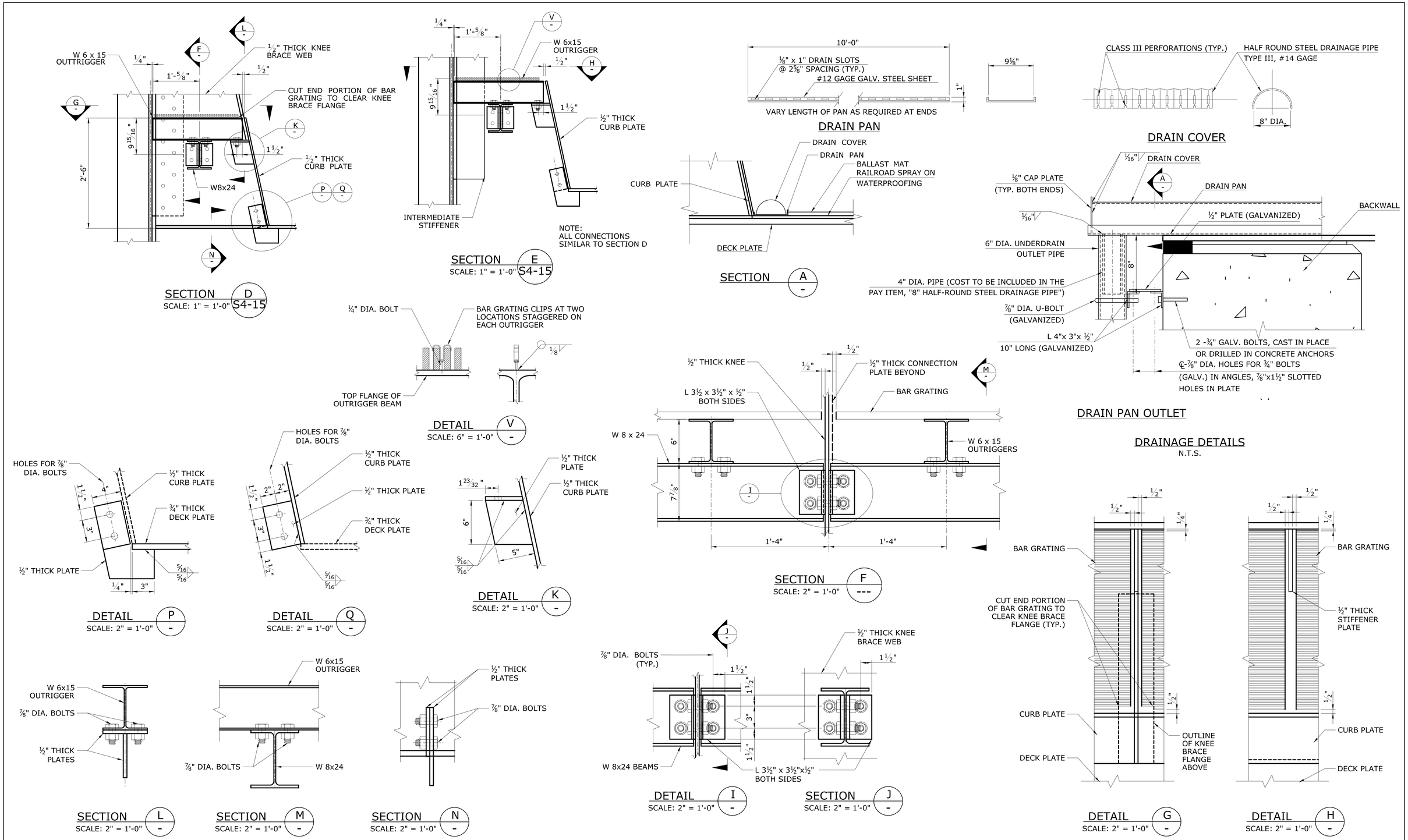

REV.	DATE	REVISION DESCRIPTION	SHEET NO.
-	-	-	-
-	-	-	-
-	-	-	-
-	-	-	-
-	-	-	-
-	-	-	-

THE INFORMATION, INCLUDING ESTIMATED QUANTITIES OF WORK, SHOWN ON THESE SHEETS IS BASED ON LIMITED INVESTIGATIONS BY THE STATE AND IS IN NO WAY WARRANTED TO INDICATE THE CONDITIONS OF ACTUAL QUANTITIES OF WORK WHICH WILL BE REQUIRED.

PLOTTED: 7/25/2018

DESIGNER/DRAFTER: BC/CR

CHECKED BY: RB

SCALE AS NOTED

STATE OF CONNECTICUT
DEPARTMENT OF TRANSPORTATION

FILENAME: ...\SB_MSH_170_3192_MP_44.50_S-018.dgn

LOCHNER
H.W. LOCHNER, INC
55 Hartland St
East Hartford, CT 06108

APPROVED BY: R. BRAY
DATE: 12/06/17

STATE OF CONNECTICUT RICHARD A. BRAY LICENSED PROFESSIONAL ENGINEER

PROJECT TITLE:
BRIDGE NO. 09223R HOUSATONIC RAILROAD MP 44.50 OVER THE HOLLENBECK RIVER

TOWN: **CANAAN**

DRAWING TITLE: **GIRDER DETAILS-4**

PROJECT NO. **170-3192**

DRAWING NO. **S4-18**

SHEET NO. **03.04.19**

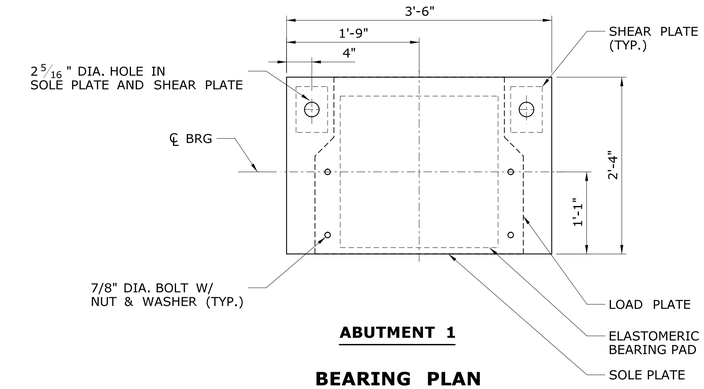

ABUTMENT 1

BEARING PLAN

SCALE: 1" = 1'-0"

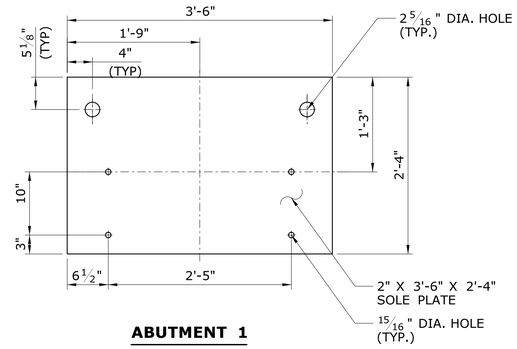

ABUTMENT 1

SOLE PLATE DETAIL

SCALE: 1" = 1'-0"

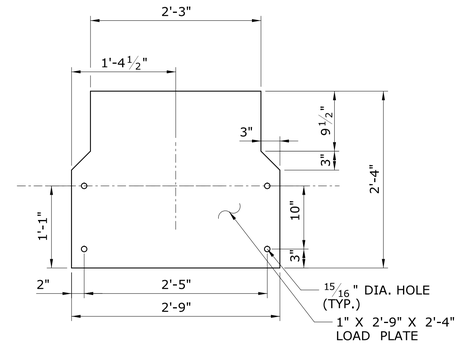

LOAD PLATE

SCALE: 1" = 1'-0"

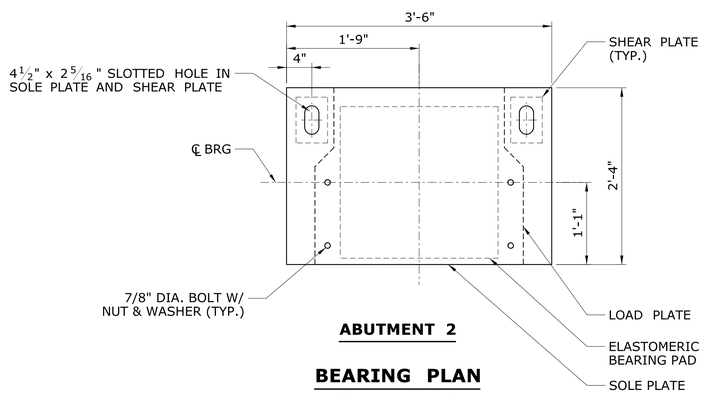

ABUTMENT 2

BEARING PLAN

SCALE: 1" = 1'-0"

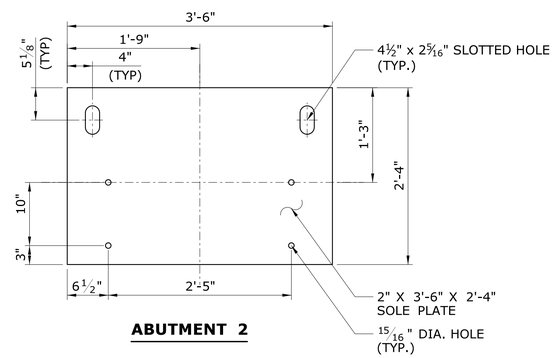

ABUTMENT 2

SOLE PLATE DETAIL

SCALE: 1" = 1'-0"

BEARING NOTES:

1. FURNISHING AND INSTALLING ELASTOMERIC BEARING PADS SHALL BE PAID FOR UNDER THE ITEM "STEEL LAMINATED ELASTOMERIC BEARINGS."
2. ELASTOMER SHALL BE GRADE 3 VIRGIN NEOPRENE WITH SHORE 'A' DUROMETER HARDNESS = 60.
3. LOAD PLATE SHALL CONFORM TO AASHTO M270, GRADE 50 (GALVANIZED) AND SHALL BE HOT BONDED TO THE ELASTOMERIC BEARING PAD DURING VULCANIZATION.
4. SOLE PLATES SHALL CONFORM TO AASHTO M270, GRADE 50 (GALVANIZED) AND SHALL BE PAID FOR UNDER THE ITEM "STEEL LAMINATED ELASTOMERIC BEARINGS."
5. SOLE PLATES SHALL BE BEVELED TO MATCH THE SLOPE OF THE GIRDERS SO THAT THE BOTTOM SURFACE OF THE PLATES ARE LEVEL AFTER APPLICATION OF FULL DEAD LOAD.
6. BOLTED CONNECTIONS SHALL BE "SLIP-CRITICAL" CONNECTIONS WITH SURFACE PREPARATION IN ACCORDANCE WITH AASHTO SPECIFICATION FOR CLASS 'C' CONDITIONS.
7. BOLTS SHALL MEET THE REQUIREMENTS OF ASTM A 325, TYPE 1 HIGH STRENGTH BOLTS. ALL BOLTS, NUTS AND WASHERS SHALL BE MECHANICALLY GALVANIZED IN ACCORDANCE WITH ASTM B 695, CLASS 50, TYPE 1.
8. WELDING DETAILS, PROCEDURES AND TESTING METHODS SHALL CONFORM TO ANSI/AASHTO/AWS D1.5: (LATEST EDITION) BRIDGE WELDING CODE AS MODIFIED BY THE AASHTO STANDARD SPECIFICATIONS FOR WELDING OF STRUCTURAL STEEL HIGHWAY BRIDGES, UNLESS OTHERWISE NOTED ON THE PLANS.
9. ELASTOMERIC BEARING SHALL BE INSTALLED AT AN AMBIENT TEMPERATURE BETWEEN 40° AND 80° F. SIDES TO BE VERTICAL AT 50° . CENTERLINE OF BEARING PAD AND SOLE PLATE SHALL BE INSTALLED AT THE CENTERLINE OF BEARINGS.
10. IN NO CASE SHALL THE ELASTOMER OR VULCANIZED BOND BE SUBJECTED TO TEMPERATURE HIGHER THAN 245° F.
11. FOR BEARING STIFFENER DETAILS, SEE "GIRDER DETAILS - 2". FOR JACKING STIFFENER DETAILS, SEE "GIRDER DETAILS - 1"
12. SWEDGED ANCHOR BOLTS SHALL BE CONFORM TO THE REQUIREMENTS OF ASTM F1554 (GRADE 55). NUTS AND WASHERS SHALL CONFORM TO ASTM A194, GRADE 2H AND ASTM F436, RESPECTIVELY.
13. BOLTS, NUTS AND WASHERS SHALL BE HOT-DIPPED GALVANIZED IN ACCORDANCE WITH ASTM A153.
14. ANCHOR BOLTS SHALL BE SET ACCURATELY AND GROUTED WITH HIGH-STRENGTH NON-SHRINK GROUT.
15. NUTS SHALL BE DRAWN UP FINGER TIGHT, THEN BACKED OFF 1/8 TURN PRIOR TO TACK WELDING NUT.
16. BEARING DESIGN LOAD:

EXPANSION FOR ABUTMENTS
DL = 164.2 KIPS
LL = 378.6 KIPS
TL = 542.8 KIPS

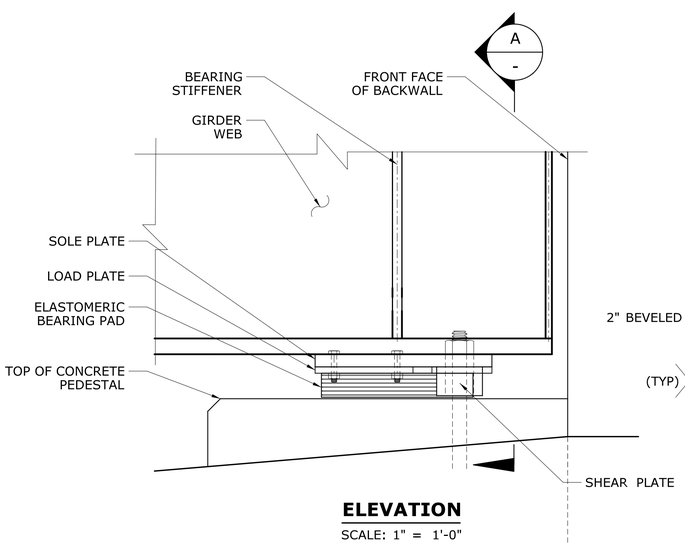

ELEVATION

SCALE: 1" = 1'-0"

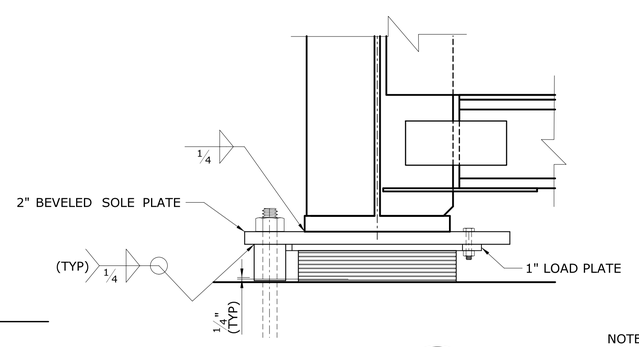

SECTION A -

SCALE: 1" = 1'-0"

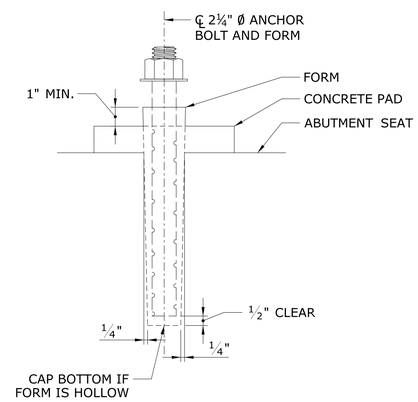

ANCHOR BOLT FORMS

N.T.S.

NOTES:

FORMS SHALL BE UNOILED, HELD IN PLACE ACCURATELY BY TEMPLATE, AND REMOVED AFTER CONCRETE HAS HARDENED. ANCHOR BOLTS SHALL BE SET ACCURATELY AND GROUTED WITH NON-SHRINK GROUT. THE COST OF FURNISHING AND INSTALLING FORMS TO BE INCLUDED IN THE ITEM "CLASS 'F' CONCRETE".

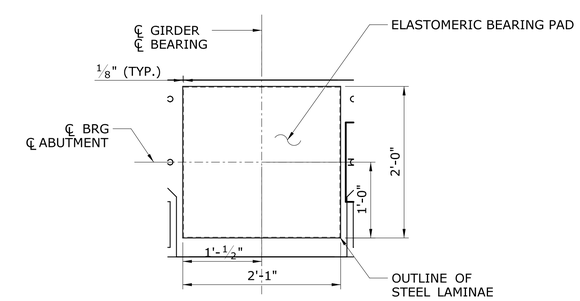

PLAN

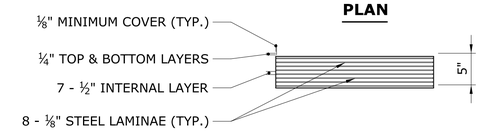

SECTION

STEEL LAMINATED ELASTOMERIC PAD

SCALE: 1" = 1'-0"

REV.	DATE	REVISION DESCRIPTION	SHEET NO.
-	-	-	-
-	-	-	-
-	-	-	-
-	-	-	-
-	-	-	-
-	-	-	-

THE INFORMATION, INCLUDING ESTIMATED QUANTITIES OF WORK, SHOWN ON THESE SHEETS IS BASED ON LIMITED INVESTIGATIONS BY THE STATE AND IS IN NO WAY WARRANTED TO INDICATE THE CONDITIONS OF ACTUAL QUANTITIES OF WORK WHICH WILL BE REQUIRED.

PLOTTED: 7/25/2018

DESIGNER/DRAFTER: BC/CR
CHECKED BY: RB
SCALE AS NOTED

STATE OF CONNECTICUT
DEPARTMENT OF TRANSPORTATION

FILENAME: ...\SB_MSH_170_3192_MP_44.50_S-019.dgn

LOCHNER
H.W. LOCHNER, INC
55 Hartland St
East Hartford, CT 06108

APPROVED BY: R. BRAY
DATE: 12/06/17

STATE OF CONNECTICUT RICHARD A. BRAY LICENSED PROFESSIONAL ENGINEER

PROJECT TITLE:
BRIDGE NO. 09223R HOUSATONIC RAILROAD MP 44.50 OVER THE HOLLENBECK RIVER

TOWN: **CANAAN**

DRAWING TITLE: **BEARINGS & BEARING DETAILS**

PROJECT NO. **170-3192**
DRAWING NO. **S4-19**
SHEET NO. **03.04.20**

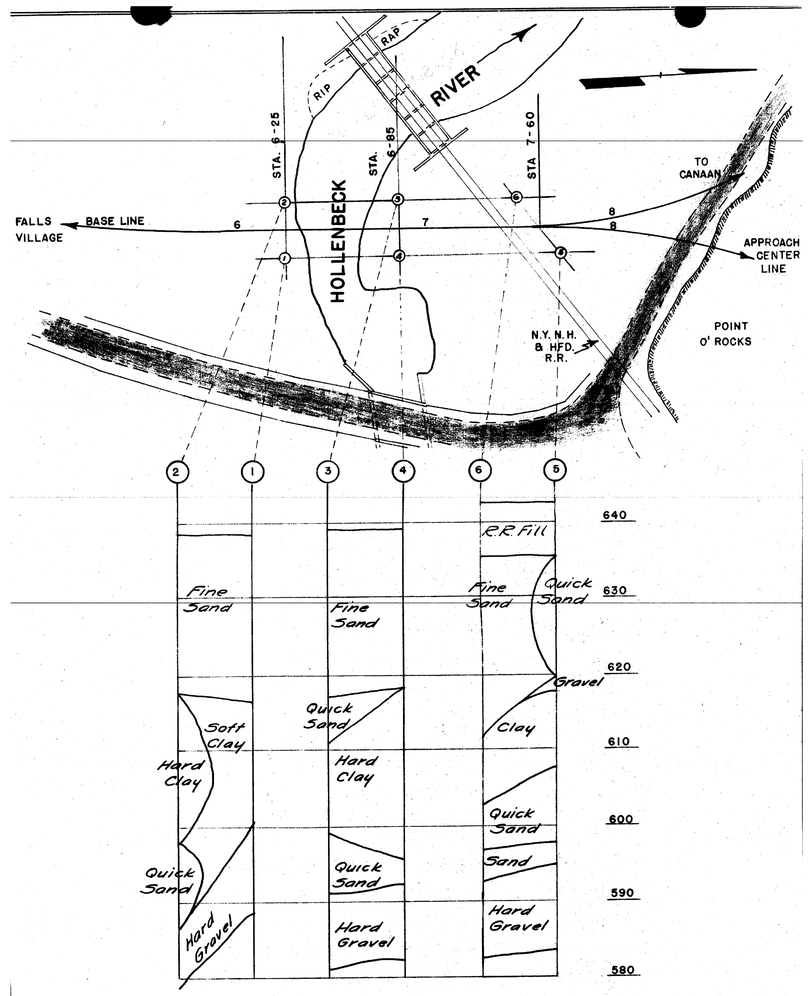

BORINGS

W.O. 210402 B

MADE BY G.A. NAGEL DATE 8-23-34
CHECKED BY A.R. COLLIER DATE 8-23-34
APPROVED DATE 8-23-34

TOWN OF CANAAN
STRUCTURE PRO. BR. POINT O' ROCKS.
SCALES HOR. 1"=40' VERT. 1"=10' SHEET NO. 1 OF 1

FOR INFORMATION ONLY | EXISTING BRIDGE NO. 09223R | REDUCED DRAWING NOT TO SCALE

REV.	DATE	REVISION DESCRIPTION	SHEET NO.
-	-	-	-
-	-	-	-
-	-	-	-
-	-	-	-
-	-	-	-
-	-	-	-

THE INFORMATION, INCLUDING ESTIMATED QUANTITIES OF WORK, SHOWN ON THESE SHEETS IS BASED ON LIMITED INVESTIGATIONS BY THE STATE AND IS IN NO WAY WARRANTED TO INDICATE THE CONDITIONS OF ACTUAL QUANTITIES OF WORK WHICH WILL BE REQUIRED.

PLOTTED: 7/25/2018

DESIGNER/DRAFTER: BC/CR
CHECKED BY: RB
NOT TO SCALE

STATE OF CONNECTICUT
DEPARTMENT OF TRANSPORTATION

FILENAME: ...\SB_MSH_170_3192_MP_44.50_S-020.dgn

LOCHNER
H.W. LOCHNER, INC
55 Hartland St
East Hartford, CT 06108

APPROVED BY: R. BRAY DATE: 12/06/17

STATE OF CONNECTICUT RICHARD A. BRAY LICENSED PROFESSIONAL ENGINEER

PROJECT TITLE: BRIDGE NO. 09223R HOUSATONIC RAILROAD MP 44.50 OVER THE HOLLENBECK RIVER

TOWN: CANAAN

DRAWING TITLE: EXISTING BORING INFORMATION

PROJECT NO. 170-3192
DRAWING NO. S4-20
SHEET NO. 03.04.21