02.05 - MISCELLANEOUS DETAIL SHEETS

INDEX OF DRAWINGS

DRAWING NUMBER	DRAWING TITLE	DRAWING NUMBER	
MDS-01	INDEX OF DRAWINGS		
MDS-02	MISCELLANEOUS DETAILS - 1		
MDS-03	MISCELLANEOUS DETAILS - 2		
MDS-04	MISCELLANEOUS DETAILS - 3		
MDS-05	MISCELLANEOUS DETAILS - 4		
MDS-06	MISCELLANEOUS DETAILS - 5		

DESIGNED BY:

LOCHNER
H.W. LOCHNER, INC
55 Hartland Street, Suite 401
East Hartford, CT 06108

STATE OF CONNECTICUT · RICHARD A. BRAY · LICENSED PROFESSIONAL ENGINEER

Richard Arthur Bray
2017.12.29
12:47:22-05'00'

VOLUME 2 SUBSETS

SUBSET NO.	SUBSET TITLE	SUBSET SHEET COUNT
01	TRAFFIC	9
02	DETOUR	2
03	LANDSCAPE DESIGN	5
04	ENVIRONMENTAL	5
05	MISCELLANEOUS DETAIL SHEETS	6

REV.	DATE	REVISION DESCRIPTION	SHEET NO.
-	-	-	-
-	-	-	-
-	-	-	-
-	-	-	-
-	-	-	-
-	-	-	-

THE INFORMATION, INCLUDING ESTIMATED QUANTITIES OF WORK, SHOWN ON THESE SHEETS IS BASED ON LIMITED INVESTIGATIONS BY THE STATE AND IS IN NO WAY WARRANTED TO INDICATE THE CONDITIONS OF ACTUAL QUANTITIES OF WORK WHICH WILL BE REQUIRED.

PLOTTED: 12/29/2017

DESIGNER/DRAFTER: BC/CR
CHECKED BY: RB
NOT TO SCALE

STATE OF CONNECTICUT
DEPARTMENT OF TRANSPORTATION

FILENAME: ...\HW_MSH_170_3192_MDS_INDEX.dgn

LOCHNER
H.W. LOCHNER, INC
55 Hartland St
East Hartford, CT 06108

APPROVED BY: R. BRAY
DATE: 12/06/17

STATE OF CONNECTICUT · RICHARD A. BRAY · LICENSED PROFESSIONAL ENGINEER

PROJECT TITLE:
REHABILITATION OF FOUR RAILROAD BRIDGES ON THE HOUSATONIC LINE

TOWN: CANAAN, KENT, AND NEW MILFORD

DRAWING TITLE: MISC DETAIL SHEETS INDEX OF DRAWINGS

PROJECT NO. 170-3192
DRAWING NO. MDS-01
SHEET NO. 02.05.01

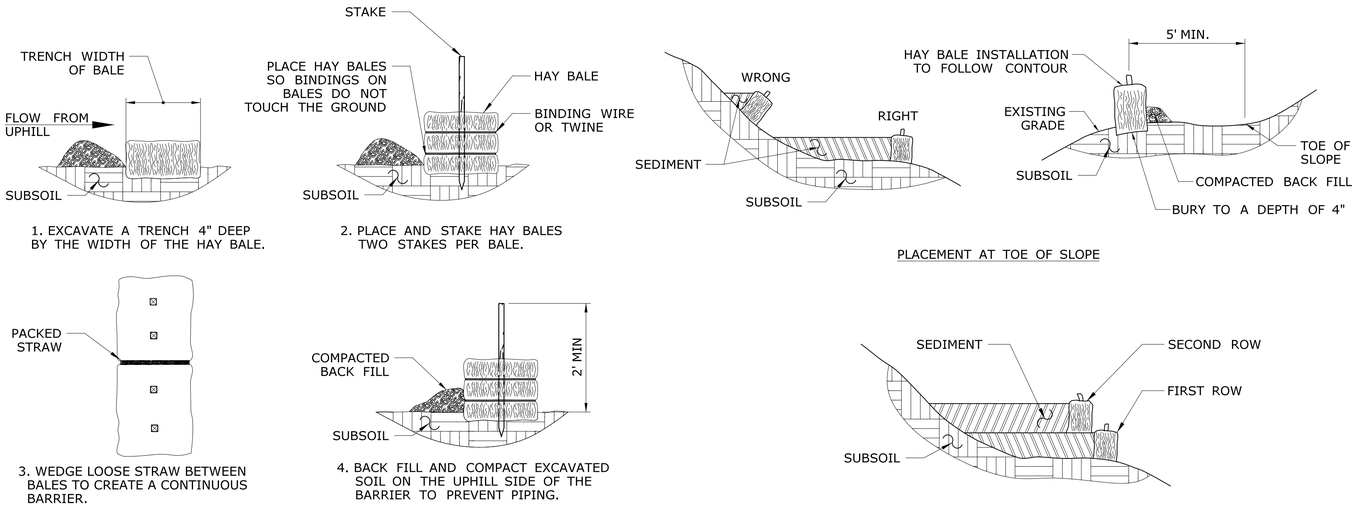

EROSION & SEDIMENTATION CONTROL GENERAL NOTES

1. SOIL EROSION AND SEDIMENTATION CONTROL MEASURES SHALL BE IN CONFORMANCE WITH THE CONNECTICUT DEPARTMENT OF ENERGY AND ENVIRONMENTAL PROTECTION (CT DEEP) "2002 CONNECTICUT GUIDELINES FOR SOIL EROSION AND SEDIMENTATION CONTROL" DEEP BULLETIN NO 34, LATEST REVISION, AND THE CONNECTICUT DEPARTMENT OF TRANSPORTATION (CTDOT) "2004 CONNECTICUT STORM WATER QUALITY MANUAL", LATEST REVISION, AND THE CTDOT FORM 817.
2. INSTALL ALL EROSION CONTROL MEASURES SHOWN, SPECIFIED.OR REQUIRED BY THE ENGINEER PRIOR TO ANY CONSTRUCTION MEASURES UNTIL FINAL SURFACE TREATMENTS ARE IN PLACE AND/OR UNTIL ALL PERMANENT VEGETATION IS ESTABLISHED.
3. MARK WORK LIMIT LINE(S) PRIOR TO STARTING WORK. DO NOT DISTURB VEGETATION OR TOPSOIL BEYOND THE PROPOSED LIMIT LINE. COORDINATE WITH THE ENGINEER FOR THE LOCATIONS FOR THE TEMPORARY STOCKPILING OF TOPSOIL DURING CONSTRUCTION.
4. FINE GRADE AND IMMEDIATELY SEED ALL SIDE SLOPES, SHOULDER AREAS, AND DISTURBED VEGETATED AREAS. ALL GRADING TO BE A MAXIMUM SLOPE OF 2:1, COMPACTED, AND STABILIZED. SLOPES GREATER THAN 2:1 TO RECEIVE EROSION CONTROL BLANKET.
5. REMOVE AND DISPOSE OF ALL SILT TRAPPED AT BARRIERS IN UPLAND AREAS AND OUTSIDE BUFFER ZONES. REMOVE MATERIALS DEPOSITED IN ANY TEMPORARY SETTLING BASIN AT THE COMPLETION OF THE PROJECT. RESTORE ALL DISTURBED AREAS TO PRE- CONSTRUCTION CONDITIONS.
6. REMOVE ALL SEDIMENT TRACKED ON PUBLIC RIGHT-OF-WAYS AT THE END OF EACH DAY.
7. THE CONTRACTOR SHALL INSPECT TEMPORARY SEDIMENT AND EROSION CONTROLS WEEKLY, AND BOTH PRIOR TO AND IMMEDIATELY AFTER EACH RAINFALL, AND AT LEAST DAILY DURING PROLONGED RAINFALL. THE CONTRACTOR SHALL MAINTAIN ALL SEDIMENT AND EROSION CONTROL SYSTEMS IN A FUNCTIONAL CONDITION IN ACCORDANCE WITH THE ABOVE REFERENCED DOCUMENTS. NECESSARY REPAIRS SHALL BE MADE WITHOUT DELAY.
8. LAND DISTURBANCE SHALL BE KEPT TO A MINIMUM NECESSARY FOR CONSTRUCTION.
9. ALL CATCH BASINS SHALL BE PROTECTED WITH SILT SACKS, HAY BALE RINGS, OR SILT FENCE THROUGHOUT THE CONSTRUCTION PERIOD AND UNTIL ALL DISTURBED AREAS ARE THOROUGHLY STABILIZED.
10. WHENEVER POSSIBLE, EROSION AND SEDIMENTATION CONTROL MEASURES SHALL BE INSTALLED PRIOR TO CONSTRUCTION. ADDITIONAL CONTROL MEASURES SHALL BE INSTALLED DURING CONSTRUCTION.
11. THE CONTRACTOR SHALL USE APPROVED METHODS/MATERIALS FOR PREVENTING THE BLOWING AND MOVEMENT OF DUST FROM EXPOSED SOIL SURFACES ONTO ADJACENT PROPERTIES AND SITE AREAS.

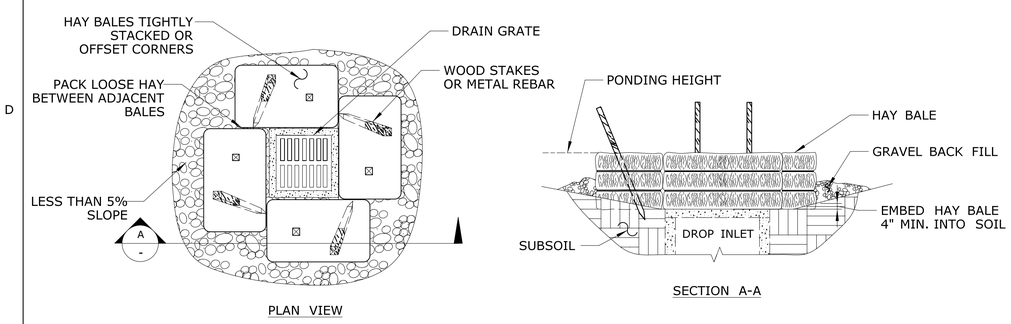

HAY BALE BARRIER AT CATCH BASIN

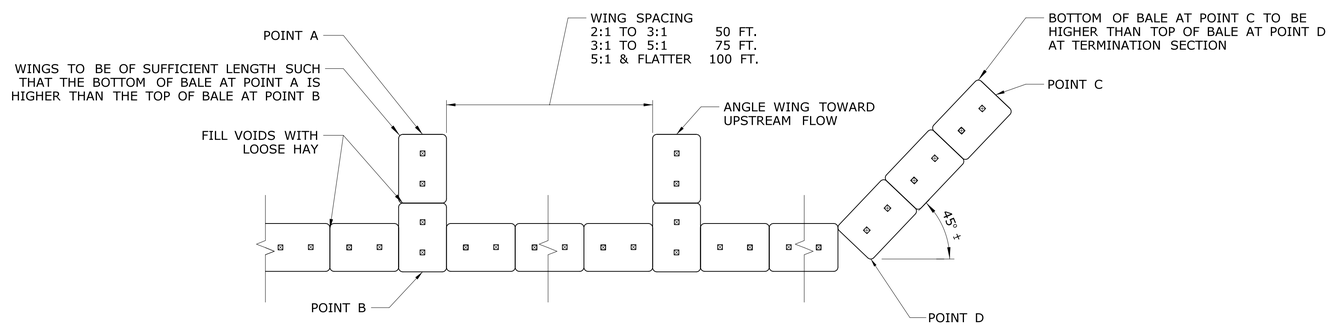

HAY BALE SYSTEM NOTES:

1. HAY BALES SHALL NOT BE USED IN A WATERCOURSE.
2. ANY VOIDS IN BETWEEN BALES SHALL BE FILLED WITH LOOSE HAY/STRAW.
3. HAY BALES SHALL BE ENTRENCHED 4" AND TIGHTLY BUTTED TOGETHER. BALES CAN BE SUCCESSFULLY PLACED WITHOUT A TRENCH IF GOOD GROUND CONTACT IS MADE. REMOVE HEAVY BRUSH AND FILL ALL VOIDS WITH LOOSE HAY.
4. WOOD STAKES SHALL HAVE A MINIMUM CROSS-SECTION SIZE OF AT LEAST 1" x 1" AND A MINIMUM LENGTH OF 4'.
5. BALES SHOULD ONLY BE USED AS A TEMPORARY BARRIER AND FOR NO LONGER THAN 60 DAYS. THEY SHALL NOT BE USED IN THE VICINITY OF URBAN AND RESIDENTIAL AREAS.
6. UPON ESTABLISHMENT OF GROUND COVER ON DISTURBED AREAS AND WHEN DIRECTED BY ENGINEER, HAY BALES WILL BE REMOVED AND USED AS MULCH. ANY SEDIMENTATION WILL BE THINLY SPREAD UPON ESTABLISHED GROUND COVER.
7. BALES SHOULD BE PLACED AWAY FROM THE TOE OF SLOPE TO MAXIMIZE THE CONFINEMENT AREA.
8. WHEN SEDIMENTATION DEPOSITS REACH WITHIN 3" OF THE TOP OF BALES, REMOVE SEDIMENTATION OR ADD BACKUP HAY BALE BARRIER BY PLACING ADDITIONAL BALES ON SEDIMENTATION DIRECTLY BEHIND FIRST ROW OF BALES AS DIRECTED BY ENGINEER.

HAY BALE SYSTEM

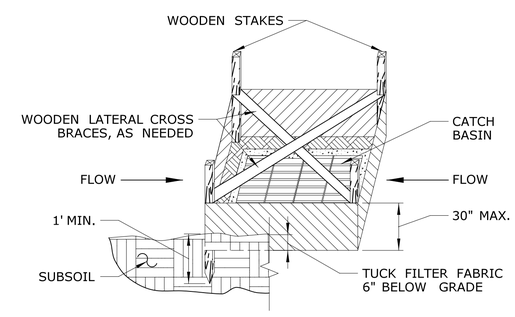

SILT FENCE BARRIER AT CATCH BASIN

REV.	DATE	REVISION DESCRIPTION	SHEET NO.
-	-	-	-
-	-	-	-
-	-	-	-
-	-	-	-
-	-	-	-
-	-	-	-

THE INFORMATION, INCLUDING ESTIMATED QUANTITIES OF WORK, SHOWN ON THESE SHEETS IS BASED ON LIMITED INVESTIGATIONS BY THE STATE AND IS IN NO WAY WARRANTED TO INDICATE THE CONDITIONS OF ACTUAL QUANTITIES OF WORK WHICH WILL BE REQUIRED.

PLOTTED: 12/29/2017

DESIGNER/DRAFTER: BC/CR
CHECKED BY: RB
NOT TO SCALE

STATE OF CONNECTICUT
DEPARTMENT OF TRANSPORTATION

FILENAME: ...\HW_MSH_170_3192_HWY_MDS-02.dgn

LOCHNER
H.W. LOCHNER, INC
55 Hartland St
East Hartford, CT 06108

APPROVED BY: R. BRAY DATE: 12/06/17

STATE OF CONNECTICUT RICHARD A. BRAY LICENSED PROFESSIONAL ENGINEER

PROJECT TITLE: REHABILITATION OF FOUR RAILROAD BRIDGES ON THE HOUSATONIC LINE

TOWN: CANAAN, KENT, AND NEW MILFORD

DRAWING TITLE: MISCELLANEOUS DETAILS - 1

PROJECT NO. 170-3192
DRAWING NO. MDS-02
SHEET NO. 02.05.02

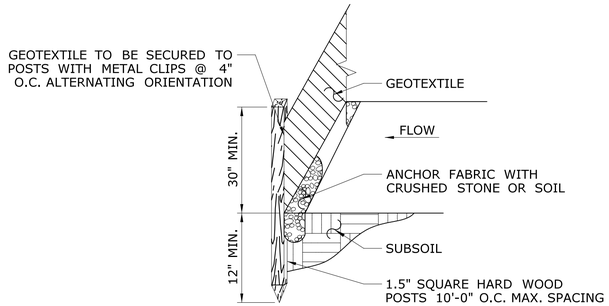

SILT FENCE

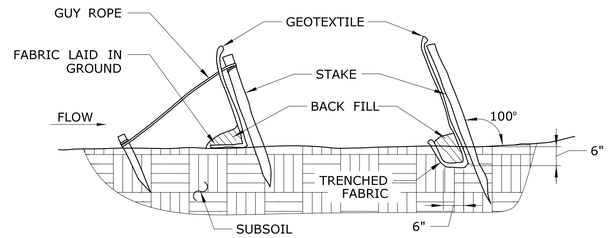

BACK FILL OR TRENCH FABRIC TOE

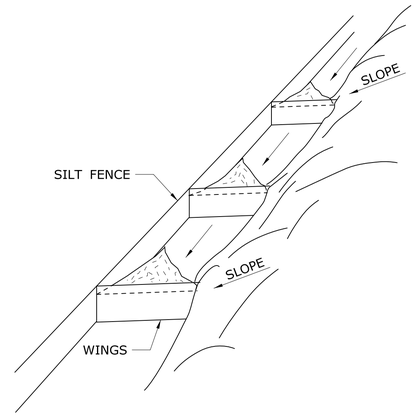

SILT FENCE SYSTEM PLACEMENT ON TOE OF SLOPE

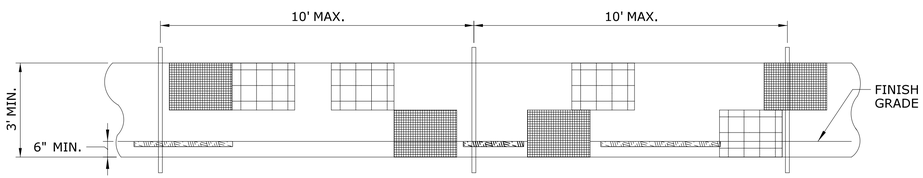

ELEVATION VIEW

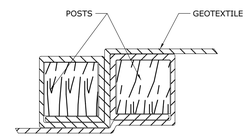

FENCE JOINT PLAN VIEW

GEOTEXTILE SILT FENCE NOTES:

1. GEOTEXTILE FENCE SHOULD BE PLACED SO THE FENCE LEANS TOWARD THE SOURCE OF SEDIMENT.
2. MAXIMUM SPACING FOR WOODEN STAKES OR STEEL POSTS IS 10'-0".
3. WOOD STAKES SHALL HAVE A MINIMUM CROSS-SECTION SIZE OF 1.5" X 1.5" AND A MINIMUM LENGTH OF 3'-6". SILT FENCE SUBJECT TO HEAVY LOADS SHALL BE REINFORCED WITH STEEL POSTS AT LEAST 0.5 LB. PER FOOT WITH A MINIMUM LENGTH OF 4 FT.
4. WOODEN STAKES OR STEEL POSTS SHALL BE DRIVEN TO A MINIMUM OF 12" INTO THE GROUND.
5. 6" OF GEOTEXTILE SHALL BE BURIED BY BACK FILLING OR TRENCHING AND AT LEAST 30" IN HEIGHT OF GEOTEXTILE SHALL BE EXPOSED.
6. FABRIC SHALL BE JOINED ONLY AT A SUPPORT POST WITH A MINIMUM OF 6" OVERLAP AND SECURELY SEALED.
7. UPON REESTABLISHMENT OF GROUND COVER IN DISTURBED AREAS AND WHEN DIRECTED BY THE ENGINEER OR UPON FINAL INSPECTION, FENCE AND ANY SEDIMENT SHALL BE REMOVED. AT NO TIME WILL THE FENCE REMAIN IN PLACE AFTER PROJECT COMPLETION.
8. GEOTEXTILE FENCE SHALL NOT BE USED IN A WATER COURSE.
9. ONLY GEOTEXTILE FROM THE DEPARTMENTS APPROVED PRODUCT LIST SHALL BE USED.
10. BACK FILLING OF GEOTEXTILE SHALL ONLY BE USED WHEN GROUND IS FROZEN OR WHERE OTHER OBSTRUCTIONS ARE ENCOUNTERED THAT PROHIBIT TRENCHING; E.G., STUMPS OR ROCKS.
11. CLEAN OUT ACCUMULATED SEDIMENT WHEN ONE- HALF OF THE ORIGINAL HEIGHT OF THE GEOTEXTILE FENCE BECOMES FILLED WITH SEDIMENT OR AS DIRECTED BY THE ENGINEER.
12. POSITION POSTS TO OVERLAP MAKING CERTAIN THAT FABRIC FOLDS AROUND EACH POST ONE FULL TURN.
13. DRIVE POSTS TIGHTLY TOGETHER AND SECURE TOPS OF POSTS BY TYING OFF WITH CORD OR WIRE TO PREVENT FLOW- THROUGH OF BUILT- UP SEDIMENT AT JOINTS.
14. WHEN USING SILT FENCE ALONG TOE OF SLOPE, ADD WINGS TO PREVENT SEDIMENT FROM MOVING ALONG THE FENCE AND OFF THE SITE.

GEOTEXTILE SILT FENCE SYSTEM

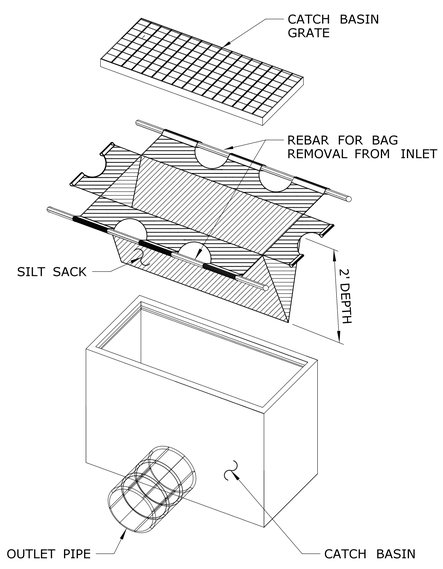

SILT SACK

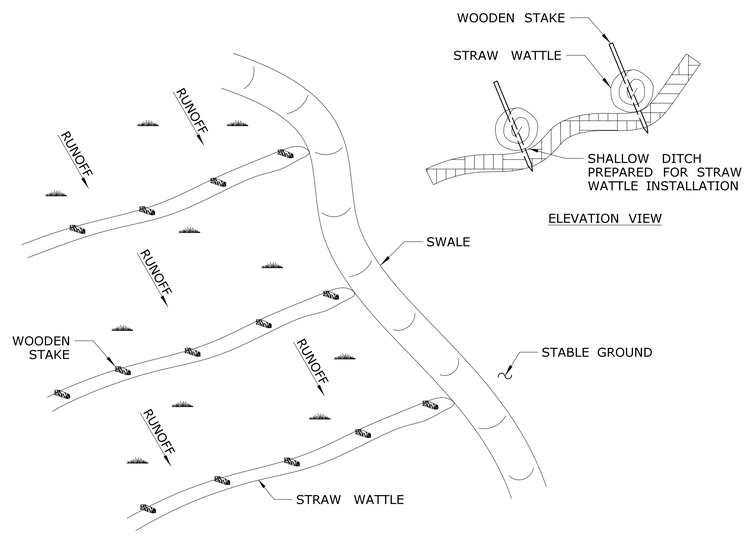

STRAW WATTLE SYSTEM

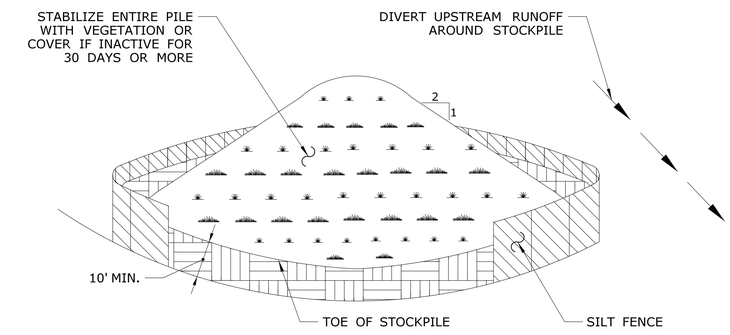

TEMPORARY SOIL STOCKPILING NOTES:

1. AREA CHOSEN FOR STOCKPILING OPERATIONS SHALL BE DRY AND STABLE.
2. MAXIMUM SLOPE OF STOCKPILE SHALL BE 2H:1V.
3. UPON COMPLETION OF SOIL STOCKPILING, EACH PILE SHALL BE SURROUNDED WITH EITHER SILT FENCING OR HAY BALES, THEN STABILIZED WITH VEGETATION OR COVERED WITH POLYETHYLENE SHEETING AND SANDBAGS.
4. A POLYETHYLENE MEMBRANE UNDERLAYMENT MAY BE REQUIRED PER ENGINEER REQUESTS.

TEMPORARY SOIL STOCKPILING

REV.	DATE	REVISION DESCRIPTION	SHEET NO.
-	-	-	-
-	-	-	-
-	-	-	-
-	-	-	-
-	-	-	-
-	-	-	

THE INFORMATION, INCLUDING ESTIMATED QUANTITIES OF WORK, SHOWN ON THESE SHEETS IS BASED ON LIMITED INVESTIGATIONS BY THE STATE AND IS IN NO WAY WARRANTED TO INDICATE THE CONDITIONS OF ACTUAL QUANTITIES OF WORK WHICH WILL BE REQUIRED.

PLOTTED: 12/29/2017

DESIGNER/DRAFTER: BC/CR

CHECKED BY: RB

NOT TO SCALE

STATE OF CONNECTICUT
DEPARTMENT OF TRANSPORTATION

FILENAME: ...\HW_MSH_170_3192_HWY_MDS-03.dgn

LOCHNER
H.W. LOCHNER, INC
55 Hartland St
East Hartford, CT 06108

APPROVED BY: R. BRAY DATE: 12/06/17

STATE OF CONNECTICUT RICHARD A. BRAY LICENSED PROFESSIONAL ENGINEER

PROJECT TITLE: REHABILITATION OF FOUR RAILROAD BRIDGES ON THE HOUSATONIC LINE

TOWN: CANAAN, KENT, AND NEW MILFORD

DRAWING TITLE: MISCELLANEOUS DETAILS - 2

PROJECT NO. 170-3192

DRAWING NO. MDS-03

SHEET NO. 02.05.03

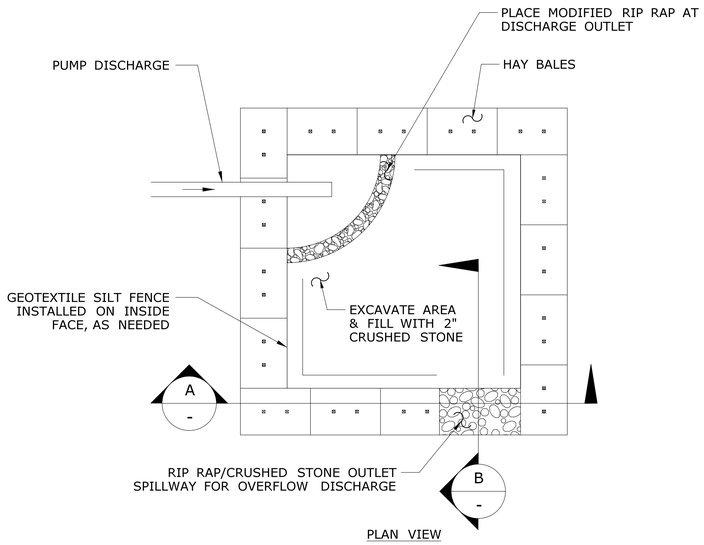

PLAN VIEW

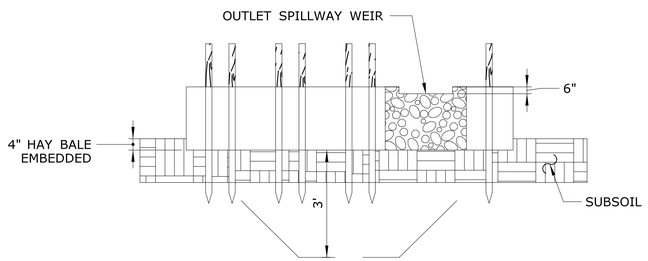

SECTION A-A

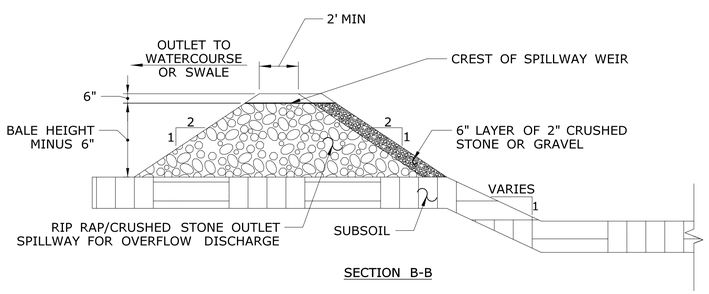

SECTION B-B

DEWATERING BASIN NOTE:

1. DIMENSIONS VARY ACCORDING TO PUMPING RATES. MINIMUM REQUIRED STORAGE IS CALCULATED FROM CREST OF SPILLWAY WEIR.

DEWATERING BASIN

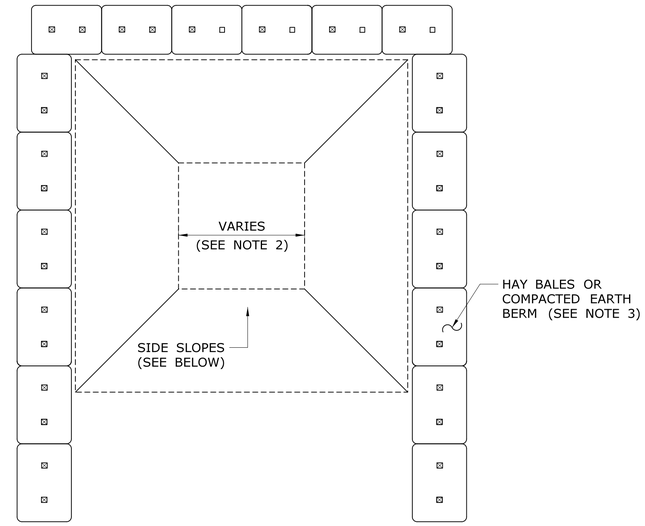

PLAN VIEW

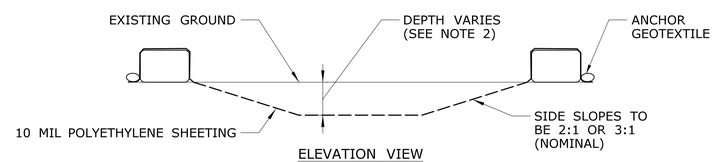

ELEVATION VIEW

CONCRETE WASHOUT AREA NOTES:

1. CONCRETE WASHOUT AREA(S) SHALL BE INSTALLED PRIOR TO CONCRETE PLACEMENT ON SITE. THE WASHOUT AREA SHALL BE ENTIRELY SELF -CONTAINED.

2. THE CONTRACTOR SHALL SUBMIT THE DESIGN, LOCATION AND SIZING OF THE CONCRETE WASHOUT AREA(S) WITH THE PROJECT'S EROSION AND SEDIMENTATION CONTROL PLAN FOR APPROVAL BY THE ENGINEER.

   LOCATION: WASHOUT AREA(S) ARE TO BE LOCATED AT LEAST 50 FEET FROM ANY STREAM, WETLAND, STORM DRAINS, OR OTHER SENSITIVE RESOURCES. THE FLOOD CONTINGENCY PLAN MUST ADDRESS THE CONCRETE WASHOUT IF THE WASHOUT IS TO BE LOCATED WITHIN THE FLOODPLAIN.

   SIZE: THE WASHOUT MUST HAVE SUFFICIENT VOLUME TO CONTAIN ALL LIQUID AND CONCRETE WASTE GENERATED BY WASHOUT OPERATION INCLUDING, BUT NOT LIMITED TO, OPERATION ASSOCIATED WITH GROUT AND MORTAR.

3. SURFACE DISCHARGE IS UNACCEPTABLE. THEREFORE, HAY BALES OR OTHER CONTROL MEASURES, AS APPROVED BY THE ENGINEER, SHOULD BE USED AROUND THE PERIMETER OF THE CONCRETE WASHOUT AREA FOR CONTAINMENT.

4. SIGNS SHOULD BE PLACED AT THE CONSTRUCTION ENTRANCE(S), AT THE CONCRETE AREA(S) AND ELSEWHERE AS NECESSARY TO CLEARLY INDICATE THE LOCATION OF THE CONCRETE WASHOUT TO OPERATORS OF CONCRETE TRUCKS AND PUMP RIGS. WASHOUT AREA(S) SHOULD BE FLAGGED WITH SAFETY FENCING OR OTHER APPROVED METHODS.

5. WASHOUT AREA(S) ARE TO BE INSPECTED AT LEAST ONCE A WEEK FOR DAMAGE, STRUCTURAL LEAKS OR OVERFLOWS. WASHOUT AREA(S) SHOULD BE CHECKED AFTER HEAVY RAINS.

6. HARDENED CONCRETE WASTE SHOULD BE REMOVED AND DISPOSED OF WHEN THE WASTE AREA HAS ACCUMULATED TO HALF OF THE CONCRETE WASHOUT'S HEIGHT. THE WASTE CAN BE STORED AT AN UPLAND LOCATION, AS APPROVED BY THE ENGINEER. ALL CONCRETE WASTE SHALL BE DISPOSED OF IN A MANNER CONSISTENT WITH ALL APPLICABLE LAWS, REGULATIONS, AND GUIDELINES.

CONCRETE WASHOUT AREA

REV.	DATE	REVISION DESCRIPTION	SHEET NO.
-	-	-	-
-	-	-	-
-	-	-	-
-	-	-	-
-	-	-	-
-	-	-	-

THE INFORMATION, INCLUDING ESTIMATED QUANTITIES OF WORK, SHOWN ON THESE SHEETS IS BASED ON LIMITED INVESTIGATIONS BY THE STATE AND IS IN NO WAY WARRANTED TO INDICATE THE CONDITIONS OF ACTUAL QUANTITIES OF WORK WHICH WILL BE REQUIRED.

PLOTTED: 12/29/2017

DESIGNER/DRAFTER: BC/CR
CHECKED BY: RB
NOT TO SCALE

STATE OF CONNECTICUT
DEPARTMENT OF TRANSPORTATION

FILENAME: ...\HW_MSH_170_3192_HWY_MDS-04.dgn

LOCHNER
H.W. LOCHNER, INC
55 Hartland St
East Hartford, CT 06108

APPROVED BY: R. BRAY DATE: 12/06/17

STATE OF CONNECTICUT RICHARD A. BRAY LICENSED PROFESSIONAL ENGINEER

PROJECT TITLE: REHABILITATION OF FOUR RAILROAD BRIDGES ON THE HOUSATONIC LINE

TOWN: CANAAN, KENT, AND NEW MILFORD

DRAWING TITLE: MISCELLANEOUS DETAILS - 3

PROJECT NO. 170-3192
DRAWING NO. MDS-04
SHEET NO. 02.05.04

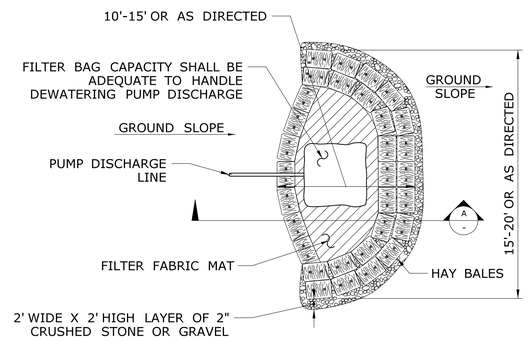

PLAN VIEW

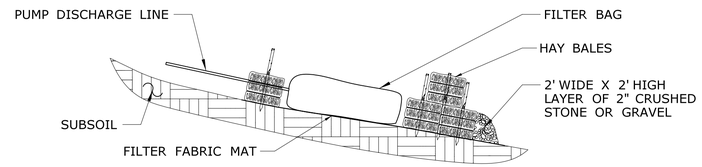

SECTION A-A

SEDIMENT TRAP NOTES:

1. LOCATION OF SEDIMENT TRAP SUBJECT TO APPROVAL BY ENGINEER.
2. SEDIMENT TRAPS OR SETTLING BASINS SHALL BE USED FOR CONSTRUCTION DEWATERING.
3. DISCHARGE AWAY FROM WORK AREA/DEWATERING AREA.

SEDIMENT TRAP

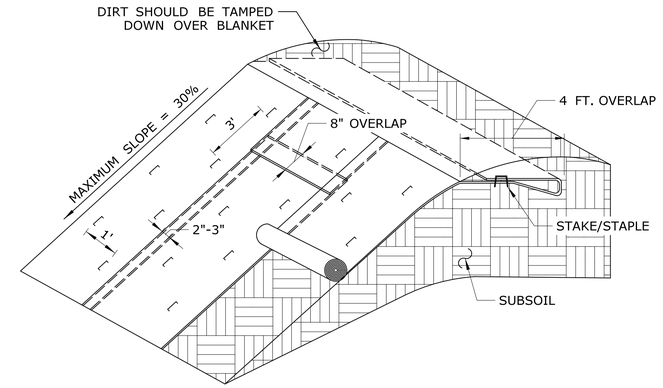

EROSION CONTROL BLANKET NOTES:

1. EROSION CONTROL BLANKET SHOULD BE INSTALLED VERTICALLY DOWN SLOPE.
2. STAKES/STAPLES SHOULD BE PLACED NO FURTHER THAN 3 FT. APART VERTICALLY AND 1 FT. APART HORIZONTALLY.
3. SLOPE SURFACE SHOULD BE FREE OF STICKS, ROCKS AND OTHER OBSTRUCTIONS.
4. BLANKETS SHOULD BE ROLLED OUT LOOSELY AND STAKED/STAPLED TO MAINTAIN DIRECT SOIL CONTACT. DO NOT STRETCH BLANKETS.

EROSION CONTROL BLANKET

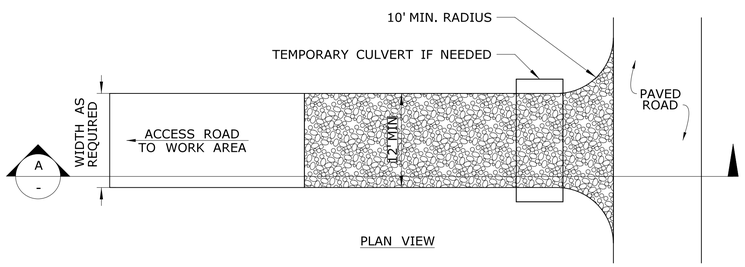

PLAN VIEW

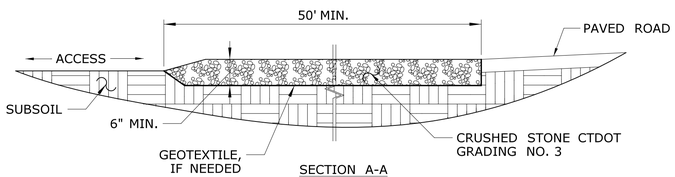

SECTION A-A

CONSTRUCTION ENTRANCE NOTES:

1. TOPSOIL AND ORGANICS SHOULD BE REMOVED PRIOR TO INSTALLATION.
2. CONSTRUCTION ENTRANCE TO BE LOCATED WHERE ACCESS ROAD MEETS PAVED ACCESS/DRIVEWAY.
3. AFTER CONSTRUCTION, ANY DEBRIS SHOULD BE CLEARED FROM THE TRACKING PAD, THE PAD RE -LEVELED AND 2"-4" OF 3/4" CRUSHED GRAVEL SHOULD BE ADDED TO FILL VOIDS AND CREATE A SMOOTH SURFACE WITH A 2% CROWN OR CROSS -SLOPE.

CONSTRUCTION ENTRANCE

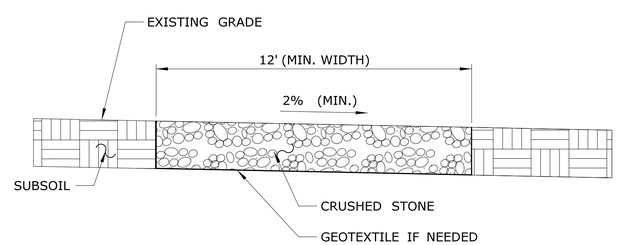

ANTI -TRACKING PAD NOTE:

1. RESTORE AREA DISTURBED FROM ANTI -TRACKING PAD LIMIT TO EXISTING GROUND ELEVATION, OR AS INDICATED ON THE PLANS.

ANTI -TRACKING PAD

REV.	DATE	REVISION DESCRIPTION	SHEET NO.
-	-	-	-
-	-	-	-
-	-	-	-
-	-	-	-
-	-	-	-
-	-	-	-

THE INFORMATION, INCLUDING ESTIMATED QUANTITIES OF WORK, SHOWN ON THESE SHEETS IS BASED ON LIMITED INVESTIGATIONS BY THE STATE AND IS IN NO WAY WARRANTED TO INDICATE THE CONDITIONS OF ACTUAL QUANTITIES OF WORK WHICH WILL BE REQUIRED.

PLOTTED: 12/29/2017

DESIGNER/DRAFTER: BC/CR
CHECKED BY: RB
NOT TO SCALE

STATE OF CONNECTICUT
DEPARTMENT OF TRANSPORTATION

FILENAME: ...\HW_MSH_170_3192_HWY_MDS-05.dgn

LOCHNER
H.W. LOCHNER, INC
55 Hartland St
East Hartford, CT 06108

APPROVED BY: R. BRAY
DATE: 12/06/17

STATE OF CONNECTICUT RICHARD A. BRAY LICENSED PROFESSIONAL ENGINEER

PROJECT TITLE: REHABILITATION OF FOUR RAILROAD BRIDGES ON THE HOUSATONIC LINE

TOWN: CANAAN, KENT, AND NEW MILFORD

DRAWING TITLE: MISCELLANEOUS DETAILS - 4

PROJECT NO. 170-3192
DRAWING NO. MDS-05
SHEET NO. 02.05.05

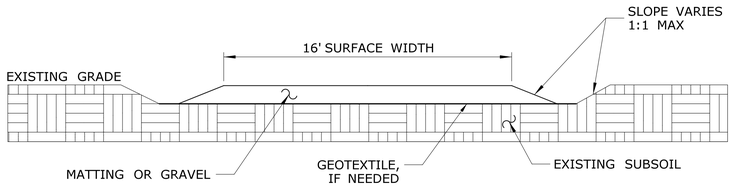

TEMPORARY ACCESS ROAD NOTES:

1. CONSTRUCT ROADS TO THE MINIMUM WIDTH, UNLESS INDICATED OTHERWISE.
2. ACCESS ROADS SHOULD NOT EXCEED 16 FT. IN WIDTH ON THE TRAVELED SURFACE UNLESS SPECIFIED OTHERWISE. FILL MATERIAL SLOPING OUTWARD FROM THE TRAVELLED SURFACE OF THE GRAVEL ROAD MAY INCREASE THE FOOTPRINT OF FILL AND MAY ADD UP TO 2 FT. ON EITHER SIDE OF THE ROAD (TOTAL OF 20-FT. WIDTH).
3. ACTUAL DIMENSIONS MAY VARY DEPENDING ON SITE CONSTRAINTS AND TOPOGRAPHY. ROAD SHOULDERS AT TURNING POINTS OR AT THE INGRESS/EGRESS OF AN ACCESS ROAD MAY BE WIDER THAN 20 FT.
4. POST CONSTRUCTION, ALL TEMPORARY ACCESS ROADS SHALL BE RESTORED TO PRE-CONSTRUCTION CONDITIONS UNLESS OTHERWISE DIRECTED.

TEMPORARY ACCESS ROAD

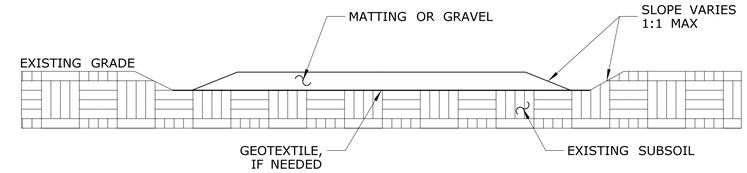

ACCESS ROAD OR WORK PAD CONSTRUCTION IN A FLOODPLAIN NOTES:

1. POST CONSTRUCTION, ALL GRADES WITHIN THE 100-YEAR FLOODPLAIN AND REGULATORY FLOODWAY MUST BE RESTORED TO BE AT OR BELOW PRE- CONSTRUCTION CONTOURS OR AS INDICATED IN THE PLANS.
2. FOR GRAVEL WORK AREAS OR ACCESS ROUTES WITHIN THE 100-YEAR FLOODPLAIN, INTENDED TO BE LEFT IN PLACE, PREPARE SURFACE BY OVER EXCAVATING THE EXISTING MATERIAL AND BACK FILL TO THE EXISTING GRADE. EXCESS SEDIMENT SHALL BE REMOVED FROM THE SITE OR SPREAD OUTSIDE OF THE 100-YEAR FLOODPLAIN IN UPLANDS. WORK AREAS CONSTRUCTED AT OR BELOW THE EXISTING GRADE MAY REMAIN IN PLACE POST- CONSTRUCTION.
3. CONSTRUCT ROADS TO THE MINIMUM WIDTH, UNLESS INDICATED OTHERWISE.
4. ACCESS ROADS SHOULD NOT EXCEED 16 FT. IN WIDTH ON THE TRAVELED SURFACE UNLESS SPECIFIED OTHERWISE. FILL MATERIAL SLOPING OUTWARD FROM THE TRAVELLED SURFACE OF THE GRAVEL ROAD MAY INCREASE THE FOOTPRINT OF FILL AND MAY ADD UP TO 2 FT. ON EITHER SIDE OF THE ROAD (TOTAL OF 20-FT. WIDTH).
5. ACTUAL DIMENSIONS MAY VARY DEPENDING ON SITE CONSTRAINTS AND TOPOGRAPHY. ROAD SHOULDERS AT TURNING POINTS OR AT THE INGRESS/EGRESS OF AN ACCESS ROAD MAY BE WIDER THAN 20 FT.

ACCESS ROAD OR WORK PAD IN A FLOODPLAIN

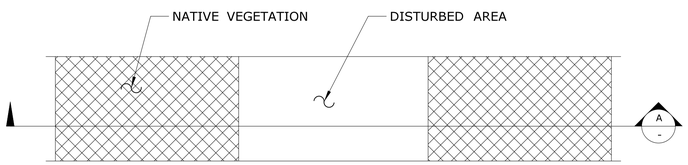

PLAN VIEW

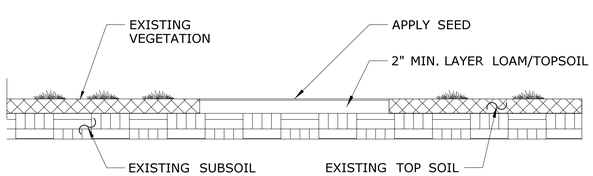

SECTION A-A

LOAMING AND SEEDING NOTE:

1. SEED MIX APPLICATION IN ACCORDANCE WITH MANUFACTURE ERS RECOMMENDATIONS.

LOAMING AND SEEDING

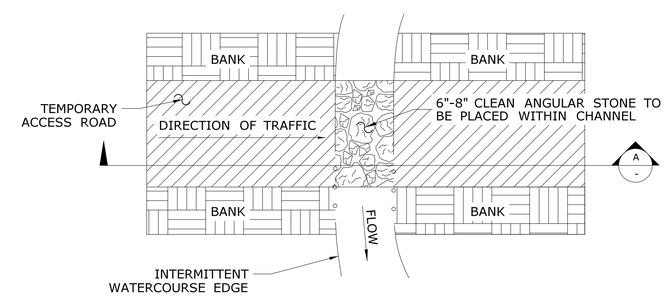

PLAN VIEW

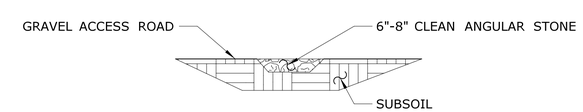

SECTION A-A

INTERMITTENT STREAM CROSSING

REV.	DATE	REVISION DESCRIPTION	SHEET NO.
-	-	-	-
-	-	-	-
-	-	-	-
-	-	-	-
-	-	-	-
-	-	-	-

THE INFORMATION, INCLUDING ESTIMATED QUANTITIES OF WORK, SHOWN ON THESE SHEETS IS BASED ON LIMITED INVESTIGATIONS BY THE STATE AND IS IN NO WAY WARRANTED TO INDICATE THE CONDITIONS OF ACTUAL QUANTITIES OF WORK WHICH WILL BE REQUIRED.

PLOTTED: 12/29/2017

DESIGNER/DRAFTER: BC/CR
CHECKED BY: RB
NOT TO SCALE

STATE OF CONNECTICUT
DEPARTMENT OF TRANSPORTATION

FILENAME: ...\HW_MSH_170_3192_HWY_MDS-06.dgn

LOCHNER
H.W. LOCHNER, INC
55 Hartland St
East Hartford, CT 06108

APPROVED BY: R. BRAY DATE: 12/06/17

STATE OF CONNECTICUT RICHARD A. BRAY LICENSED PROFESSIONAL ENGINEER

PROJECT TITLE: REHABILITATION OF FOUR RAILROAD BRIDGES ON THE HOUSATONIC LINE

TOWN: CANAAN, KENT, AND NEW MILFORD

DRAWING TITLE: MISCELLANEOUS DETAILS - 5

PROJECT NO. 170-3192
DRAWING NO. MDS-06
SHEET NO. 02.05.06