03.01 - BRIDGE NO. 09200R
INDEX OF DRAWINGS

DRAWING NUMBER	DRAWING TITLE	DRAWING NUMBER	
S1-0	INDEX OF DRAWINGS		
S1-1	SITE PLAN		
S1-2	GENERAL PLAN AND ELEVATION		
S1-3	PROFILE, QUANTITIES, AND TYPICAL SECTION		
S1-4	BORING LOGS - 1		
S1-5	BORING LOGS - 2 AND CORING LOG		
S1-6	STAGE CONSTRUCTION - 1		
S1-7	STAGE CONSTRUCTION - 2		
S1-8	LAYOUT PLAN AND SECTION		
S1-9	INLET HEADWALL REPAIR DETAILS - 1		
S1-10	INLET HEADWALL REPAIR DETAILS - 2		
S1-11	HEADWALL AND WINGWALL DETAILS		
S1-12	ENDWALL DETAILS		

DESIGNED BY:

LOCHNER
H.W. LOCHNER, INC
55 Hartland Street, Suite 401
East Hartford, CT 06108

STATE OF CONNECTICUT RICHARD A. BRAY LICENSED PROFESSIONAL ENGINEER

Richard Arthur Bray
2018.07.25
17:05:14 -04'00'

VOLUME 3 SUBSETS

SUBSET NO.	SUBSET TITLE	SUBSET SHEET COUNT
01	BRIDGE NO. 09200R	13
02	BRIDGE NO. 09204R	13
03	BRIDGE NO. 09206R	13
04	BRIDGE NO. 09223R	21

REV.	DATE	REVISION DESCRIPTION	SHEET NO.
-	-	-	-
-	-	-	-
-	-	-	-
-	-	-	-
-	-	-	-
-	-	-	-

THE INFORMATION, INCLUDING ESTIMATED QUANTITIES OF WORK, SHOWN ON THESE SHEETS IS BASED ON LIMITED INVESTIGATIONS BY THE STATE AND IS IN NO WAY WARRANTED TO INDICATE THE CONDITIONS OF ACTUAL QUANTITIES OF WORK WHICH WILL BE REQUIRED.

PLOTTED: 7/25/2018

DESIGNER/DRAFTER: BC/CR
CHECKED BY: RB

STATE OF CONNECTICUT
DEPARTMENT OF TRANSPORTATION

FILENAME: ...\SB_MSH_170_3192_MP_15.00_INDEX.dgn

LOCHNER
H.W. LOCHNER, INC
55 Hartland St
East Hartford, CT 06108

APPROVED BY: R. BRAY
DATE: 12/06/17

STATE OF CONNECTICUT RICHARD A. BRAY LICENSED PROFESSIONAL ENGINEER

PROJECT TITLE:
BRIDGE NO. 09200R HOUSATONIC RAILROAD MP 15.00 OVER UNNAMED BROOK

TOWN: **NEW MILFORD**

DRAWING TITLE: **INDEX OF DRAWINGS**

PROJECT NO. **170-3192**
DRAWING NO. **S1-0**
SHEET NO. **03.01.01**

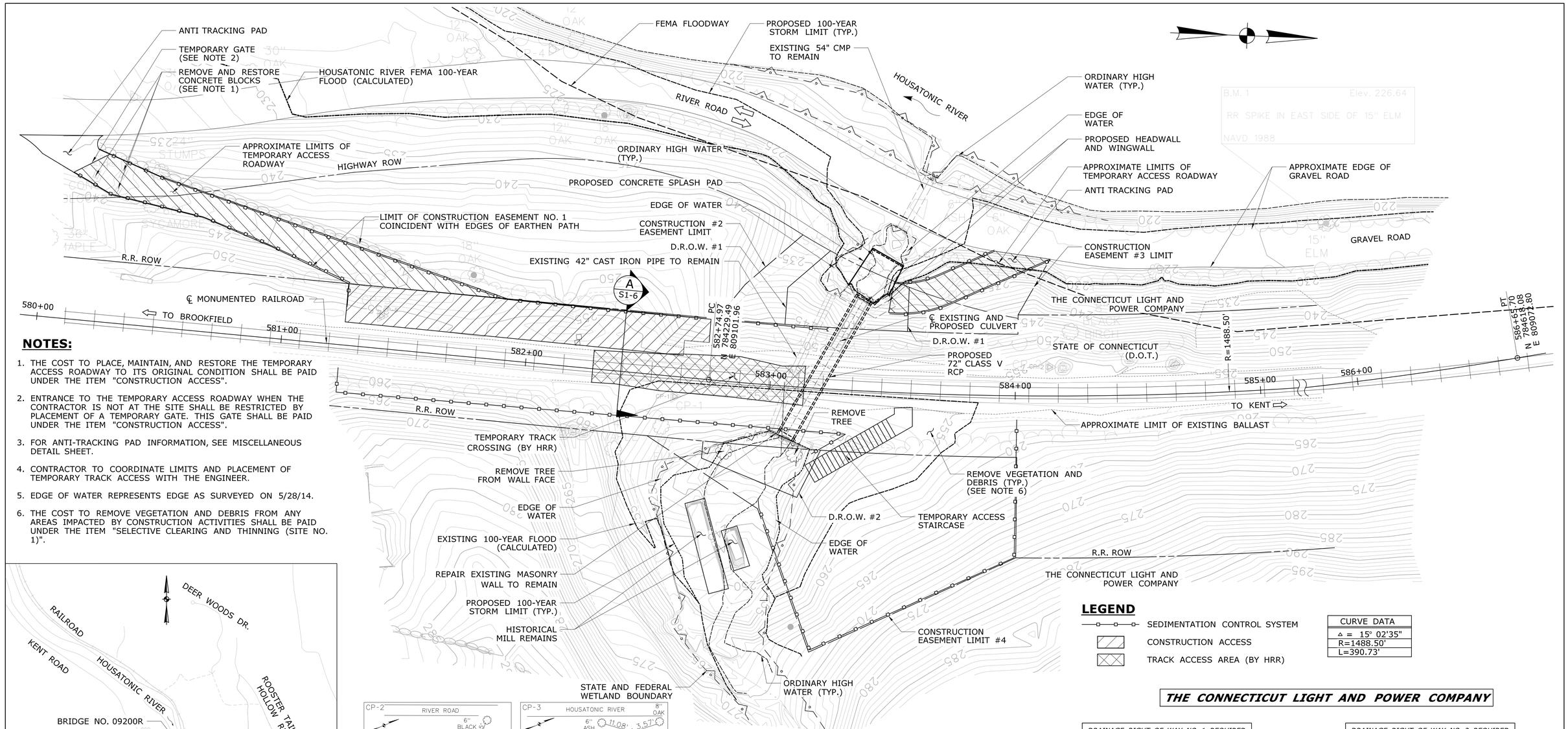

NOTES:

1. THE COST TO PLACE, MAINTAIN, AND RESTORE THE TEMPORARY ACCESS ROADWAY TO ITS ORIGINAL CONDITION SHALL BE PAID UNDER THE ITEM "CONSTRUCTION ACCESS".
2. ENTRANCE TO THE TEMPORARY ACCESS ROADWAY WHEN THE CONTRACTOR IS NOT AT THE SITE SHALL BE RESTRICTED BY PLACEMENT OF A TEMPORARY GATE. THIS GATE SHALL BE PAID UNDER THE ITEM "CONSTRUCTION ACCESS".
3. FOR ANTI-TRACKING PAD INFORMATION, SEE MISCELLANEOUS DETAIL SHEET.
4. CONTRACTOR TO COORDINATE LIMITS AND PLACEMENT OF TEMPORARY TRACK ACCESS WITH THE ENGINEER.
5. EDGE OF WATER REPRESENTS EDGE AS SURVEYED ON 5/28/14.
6. THE COST TO REMOVE VEGETATION AND DEBRIS FROM ANY AREAS IMPACTED BY CONSTRUCTION ACTIVITIES SHALL BE PAID UNDER THE ITEM "SELECTIVE CLEARING AND THINNING (SITE NO. 1)".

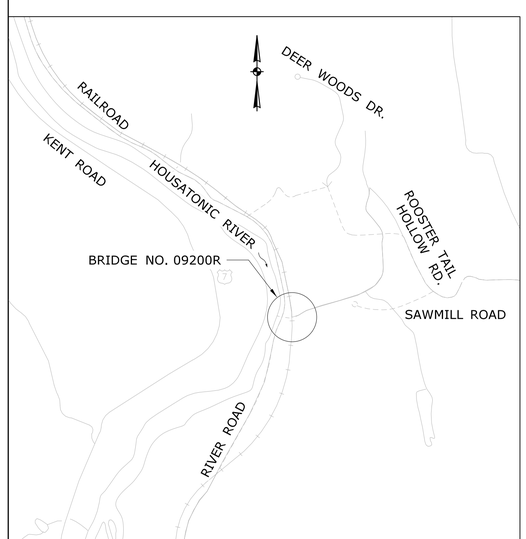

LOCATION PLAN - SITE NO.1

NTS

LEGEND

- SEDIMENTATION CONTROL SYSTEM
- CONSTRUCTION ACCESS
- TRACK ACCESS AREA (BY HRR)

CURVE DATA
Δ = 15° 02'35"
R=1488.50'
L=390.73'

PLAN

SCALE: 1" = 20'

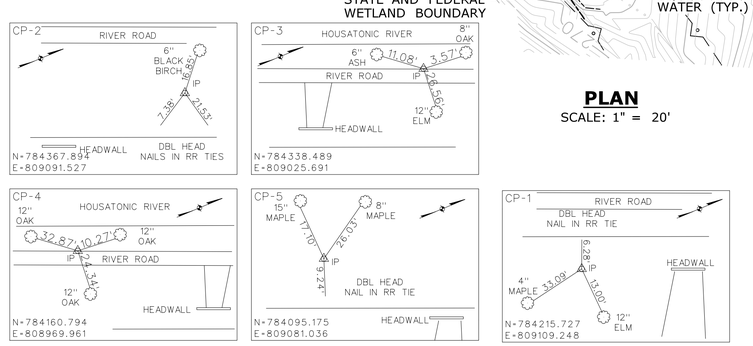

SURVEY TIES

NTS

THE CONNECTICUT LIGHT AND POWER COMPANY

DRAINAGE RIGHT OF WAY NO. 1 REQUIRED. D.R.O.W. AREA = 1,183 ± SQ. FT.

DRAINAGE RIGHT OF WAY NO. 2 REQUIRED. D.R.O.W. AREA = 612 ± SQ. FT.

CONSTRUCTION EASEMENT NO. 1 FOR THE PURPOSE OF TRANSPORTING EQUIPMENT AND MATERIALS TO AND FROM RAILROAD RIGHT OF WAY DURING REHABILITATION / REPLACEMENT OF FOUR RAILROAD BRIDGES ON THE HOUSATONIC LINE (BRIDGE NO. 9200R) REQUIRED. SAID EASEMENT IS LIMITED TO TRAVEL ONLY AND IS NOT TO BE USED FOR STORAGE OF MATERIALS OR EQUIPMENT. CONSTRUCTION EASEMENT TAKEN UNDER THIS PARAGRAPH WILL BE RESTORED BY REGRADING ANY DISTURBED AREAS. SAID EASEMENT WILL BE EXTINGUISHED UPON COMPLETION OF THE PROJECT, UNLESS SOONER EXTINGUISHED BY THE STATE. EASEMENT AREA = 1,630 ± SQ. FT.

CONSTRUCTION EASEMENT NO. 4 FOR THE PURPOSE OF CONSTRUCTION EQUIPMENT ACCESS AND STORAGE DURING REHABILITATION / REPLACEMENT OF FOUR RAILROAD BRIDGES ON THE HOUSATONIC LINE (BRIDGE NO. 9200R) REQUIRED. CONSTRUCTION EASEMENT TAKEN UNDER THIS PARAGRAPH WILL BE RESTORED BY REGRADING ANY DISTURBED AREAS. SAID EASEMENT WILL BE EXTINGUISHED UPON COMPLETION OF THE PROJECT, UNLESS SOONER EXTINGUISHED BY THE STATE. EASEMENT AREA NO. 4 = 6,270 ± SQ. FT.

CONSTRUCTION EASEMENT NO. 2 & 3 FOR THE PURPOSE OF CONSTRUCTION EQUIPMENT ACCESS AND STORAGE OF EQUIPMENT & MATERIALS DURING REHABILITATION / REPLACEMENT OF FOUR RAILROAD BRIDGES ON THE HOUSATONIC LINE (BRIDGE NO. 9200R) REQUIRED. CONSTRUCTION EASEMENT TAKEN UNDER THIS PARAGRAPH WILL BE RESTORED BY REGRADING ANY DISTURBED AREAS. SAID EASEMENT WILL BE EXTINGUISHED UPON COMPLETION OF THE PROJECT, UNLESS SOONER EXTINGUISHED BY THE STATE. TOTAL EASEMENT AREAS NO. 2 & 3 = 1,190 ± SQ. FT.

REV.	DATE	REVISION DESCRIPTION	SHEET NO.
-	-	-	-
-	-	-	-
-	-	-	-
-	-	-	-
-	-	-	-
-	-	-	-

THE INFORMATION, INCLUDING ESTIMATED QUANTITIES OF WORK, SHOWN ON THESE SHEETS IS BASED ON LIMITED INVESTIGATIONS BY THE STATE AND IS IN NO WAY WARRANTED TO INDICATE THE CONDITIONS OF ACTUAL QUANTITIES OF WORK WHICH WILL BE REQUIRED.

PLOTTED: 7/25/2018

DESIGNER/DRAFTER: BC/CR

CHECKED BY: RB

SCALE AS NOTED

STATE OF CONNECTICUT
DEPARTMENT OF TRANSPORTATION

FILENAME: ...\SB_MSH_170_3192_MP_15.00_S-001.DGN

LOCHNER
H.W. LOCHNER, INC
55 Hartland St
East Hartford, CT 06108

APPROVED BY: R. BRAY DATE: 12/06/17

STATE OF CONNECTICUT RICHARD A. BRAY LICENSED PROFESSIONAL ENGINEER

PROJECT TITLE:
BRIDGE NO. 09200R HOUSATONIC RAILROAD MP 15.00 OVER UNNAMED BROOK

TOWN: **NEW MILFORD**

DRAWING TITLE: **SITE PLAN**

PROJECT NO. **170-3192**

DRAWING NO. **S1-1**

SHEET NO. **03.01.02**

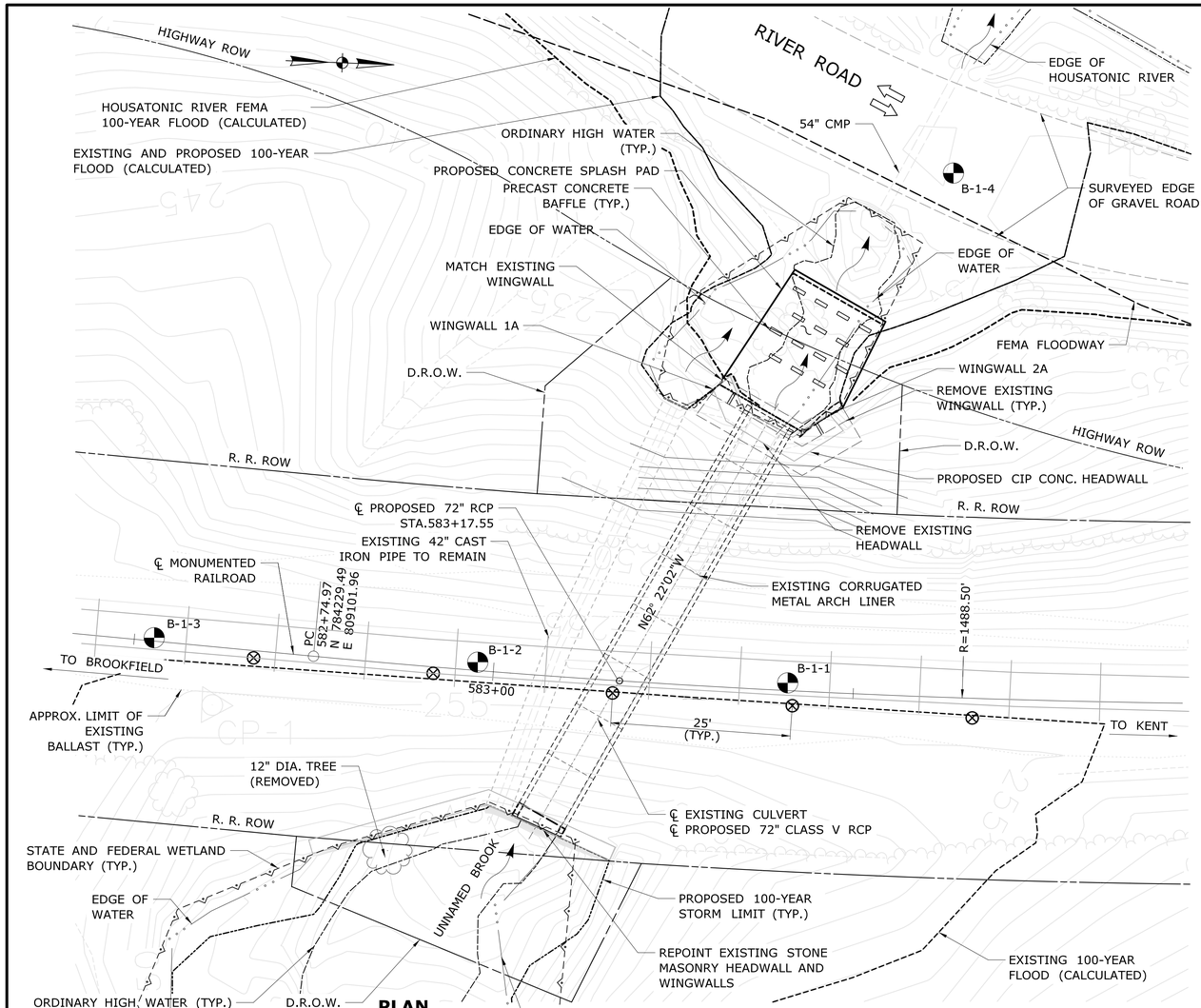

PLAN

SCALE: 1" = 10'-0"

TRANSPORTATION DIMENSIONS AND WEIGHT DATA

MEMBER	SHIPPING LENGTH	SHIPPING HEIGHT	SHIPPING WIDTH	SHIPPING WEIGHT
72" RCP	8'-0"	7'-2"	7'-2"	14,560 lbs

NOTICE TO BRIDGE INSPECTORS

THE DEPARTMENT'S BRIDGE SAFETY PROCEDURES REQUIRE THIS BRIDGE TO BE INSPECTED FOR, BUT NOT LIMITED TO, ALL APPLICABLE COMPONENTS INDICATED IN THE GOVERNING MANUALS FOR BRIDGE INSPECTION. ATTENTION MUST BE GIVEN TO INSPECTING THE FOLLOWING SPECIAL COMPONENTS AND DETAILS. (THE LISTING OF COMPONENTS FOR SPECIFIC ATTENTION SHALL NOT BE CONSTRUED TO REDUCE THE IMPORTANCE OF INSPECTION OF ANY OTHER COMPONENT OF THE STRUCTURE). THE FREQUENCY OF INSPECTION OF THIS STRUCTURE SHALL BE IN ACCORDANCE WITH THE GOVERNING MANUALS FOR BRIDGE INSPECTION, UNLESS OTHERWISE DIRECTED BY THE MANAGER OF BRIDGE SAFETY AND EVALUATION.

COMPONENT OR DETAIL	STRUCTURE SHEET REFERENCE
NONE	------

CONCRETE DISTRIBUTION

WALLS	C.Y.	18
FOOTING	C.Y.	12
TOTAL	C.Y.	30

HYDRAULIC DATA

DRAINAGE AREA	0.68 SQ. MI.
DESIGN FREQUENCY	100 YEAR
DESIGN DISCHARGE	535 CFS
AVERAGE DAILY FLOW ELEVATION	236.98 FT EST.
UPSTREAM DESIGN WATER SURFACE ELEVATION	243.44 FT
DOWNSTREAM DESIGN WATER SURFACE ELEVATION	229.23 FT

SPECIFICATIONS:
CONNECTICUT DEPARTMENT OF TRANSPORTATION FORM 817, DATED 2016, SUPPLEMENTAL SPECIFICATIONS, DATED JANUARY 2018, AND SPECIAL PROVISIONS.

DESIGN SPECIFICATIONS:
AMERICAN RAILWAY ENGINEERING AND MAINTENANCE-OF-WAY ASSOCIATION (AREMA) MANUAL FOR RAILWAY ENGINEERING (2016).

MAINTENANCE OF RAIL OPERATIONS:
DURING CONSTRUCTION, THE CONTRACTOR SHALL NOT INTERFERE WITH RAIL OPERATIONS EXCEPT AS SPECIFICALLY PERMITTED BY SPECIFICATIONS. SEE SECTION 1.08 - PROSECUTION AND PROGRESS.

ALLOWABLE DESIGN STRESSES:

CLASS 'A' CONCRETE	BASED ON f'_c = 3,000 PSI
CLASS 'F' CONCRETE	BASED ON f'_c = 4,000 PSI
REINFORCEMENT (ASTM A615 GRADE 60)	BASED ON f_y = 60,000 PSI

LIVE LOAD
COOPER E80 LOADING

EXPOSED EDGES:
EXPOSED EDGES OF CONCRETE SHALL HAVE 2" COVER UNLESS DIMENSIONED OTHERWISE.

PREFORMED EXPANSION JOINT FILLER:
THE COST OF FURNISHING AND INSTALLING PREFORMED EXPANSION JOINT FILLER SHALL BE INCLUDED IN THE COST OF THE ITEM "CLASS 'A' CONCRETE".

CONSTRUCTION JOINTS:
CONSTRUCTION JOINTS OTHER THAN THOSE SHOWN ON THE PLANS, WILL NOT BE PERMITTED WITHOUT THE PRIOR APPROVAL OF THE ENGINEER.

REINFORCEMENT:
ALL REINFORCEMENT SHALL BE ASTM A615, GRADE 60.

UTILITIES:
THE CONTRACTOR SHALL VERIFY THE SIZE AND LOCATION OF ALL UTILITIES WITHIN THE PROJECT LIMITS PRIOR TO THE START OF CONSTRUCTION AND SHALL TAKE NECESSARY PRECAUTIONS WHEN WORKING NEAR UTILITIES SO AS NOT TO DISTURB THEM. COORDINATE THE REQUIREMENTS FOR PROTECTION AND/OR RELOCATION OF UTILITIES WITH THE UTILITY OWNER PRIOR TO STARTING WORK.

ELEVATIONS:
ALL ELEVATIONS ARE GIVEN IN FEET AND ARE REFERENCED TO NAVD 1988. WHEN ELEVATIONS ARE GIVEN TO LESS THAN TWO DECIMAL PLACES, THE OMITTED DIGITS SHALL BE ASSUMED TO BE ZEROES.

HORIZONTAL DATUM:
COORDINATE GRID BASED ON THE CT STATE PLANE COORDINATE SYSTEM (NAD 83) AND REFERENCED TO GEOID03 (CONUS)

DIMENSIONS:
WHEN DECIMAL DIMENSIONS ARE GIVEN TO LESS THAN THREE DECIMAL PLACES, THE OMITTED DIGITS SHALL BE ASSUMED TO BE ZEROS

EXISTING DIMENSIONS:
DIMENSIONS OF THE EXISTING STRUCTURE SHOWN ON THESE PLANS ARE FOR GENERAL REFERENCE ONLY. THE CONTRACTOR SHALL TAKE ALL FIELD MEASUREMENTS NECESSARY FOR THEIR ACCURACY. WHEN SHOP DRAWINGS BASED ON FIELD MEASUREMENTS ARE SUBMITTED FOR APPROVAL, THE FIELD MEASUREMENT SHALL ALSO BE SUBMITTED FOR REFERENCE BY THE REVIEWER.

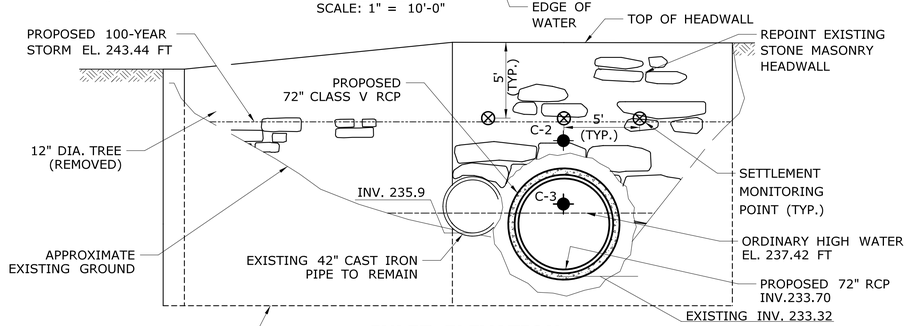

INLET ELEVATION

SCALE: 1" = 5'-0"

NOTE: EXISTING 100-YEAR FLOOD ELEVATION (CALCULATED) = 256.01 FEET. LIMIT NOT SHOWN, OUSIDE OF ELEVATION VIEW.

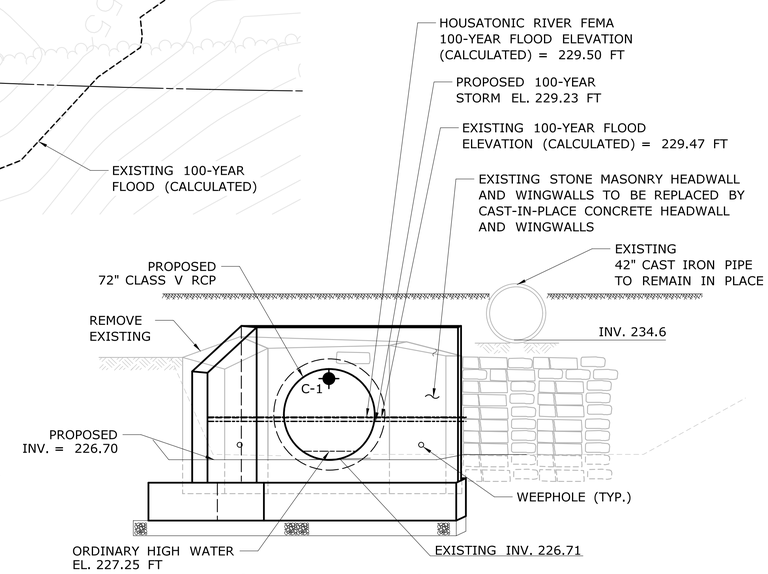

OUTLET ELEVATION

SCALE: 1" = 5'-0"

LEGEND

RIGHT OF WAY LINE

BORING LEGEND

B-1-X LOCATION OF BORING PERFORMED BY GEODESIGN, INC. OF MIDDLEBURY, CT BETWEEN 03/20/14 AND 03/24/14 SEE BORING LOG SHEETS.

C-X APPROXIMATE LOCATION OF CORING PERFORMED BY GEODESIGN, INC. OF MIDDLEBURY, CT BETWEEN 10/30/15 AND 11/3/15. SEE "BORING LOGS - 2 AND CORING LOG".

SETTLEMENT MONITORING POINT

REV.	DATE	REVISION DESCRIPTION	SHEET NO.
-	-	-	-
-	-	-	-
-	-	-	-
-	-	-	-
-	-	-	-
-	-	-	-

THE INFORMATION, INCLUDING ESTIMATED QUANTITIES OF WORK, SHOWN ON THESE SHEETS IS BASED ON LIMITED INVESTIGATIONS BY THE STATE AND IS IN NO WAY WARRANTED TO INDICATE THE CONDITIONS OF ACTUAL QUANTITIES OF WORK WHICH WILL BE REQUIRED.

PLOTTED: 7/25/2018

DESIGNER/DRAFTER: BC/CR
CHECKED BY: RB
SCALE AS NOTED

STATE OF CONNECTICUT
DEPARTMENT OF TRANSPORTATION

FILENAME: ...\SB_MSH_170_3192_MP_15.00_S-002.DGN

LOCHNER
H.W. LOCHNER, INC
55 Hartland St
East Hartford, CT 06108

APPROVED BY: R. BRAY
DATE: 12/06/17

STATE OF CONNECTICUT RICHARD A. BRAY LICENSED PROFESSIONAL ENGINEER

PROJECT TITLE:
BRIDGE NO. 09200R HOUSATONIC RAILROAD MP 15.00 OVER UNNAMED BROOK

TOWN: **NEW MILFORD**

DRAWING TITLE: **GENERAL PLAN AND ELEVATION**

PROJECT NO. 170-3192
DRAWING NO. S1-2
SHEET NO. 03.01.03

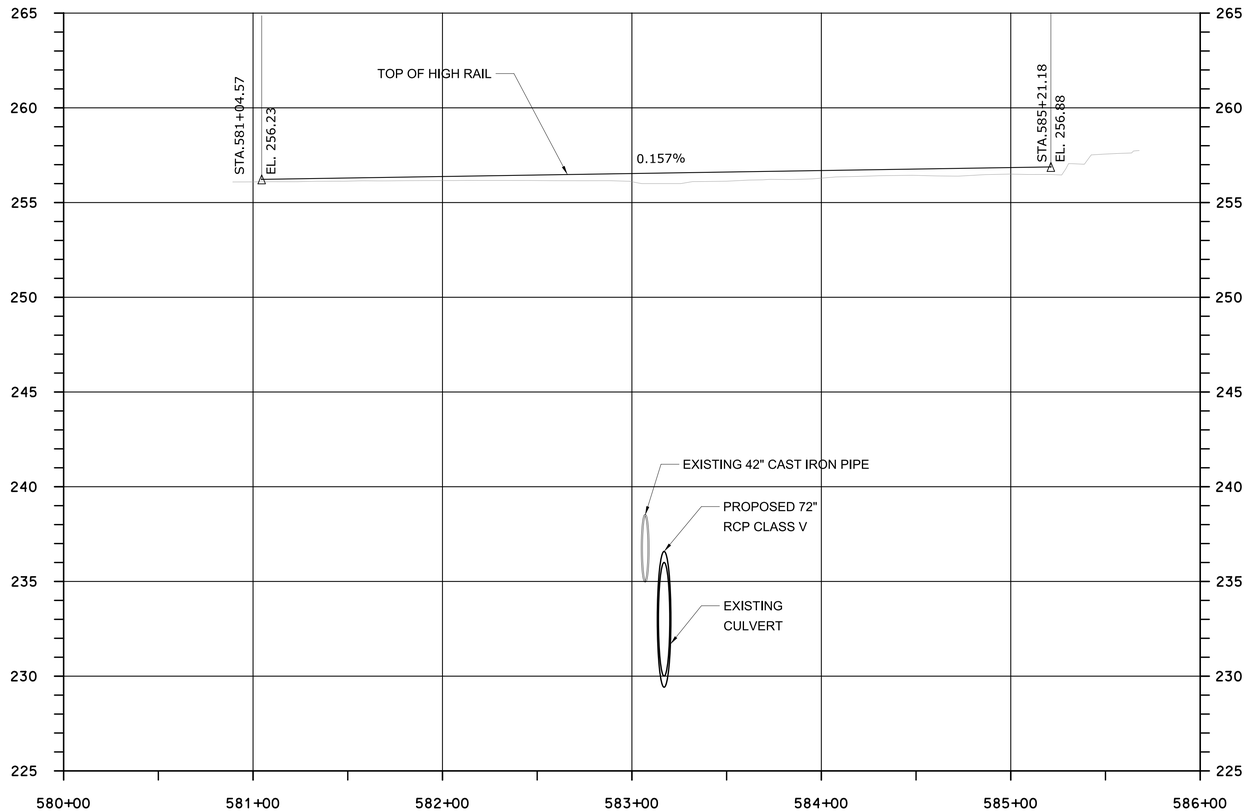

TRACK PROFILE
SCALE: VERTICAL 1" = 8'
HORIZONTAL 1" = 80'

ABBREVIATIONS

AS	AS SHOWN
C.F.S.	CUBIC FEET PER SECOND
CIP	CAST IN PLACE
C.Y.	CUBIC YARD
D.R.O.W.	DRAINAGE RIGHT OF WAY
HRR	HOUSATONIC RAILROAD
MP	MILE POST
N.T.S.	NOT TO SCALE
P/C	PRECAST
RCP	REINFORCED CONCRETE PIPE
ROW	RIGHT OF WAY
RR	RAILROAD
TYP.	TYPICAL
WP	WORKING POINT

WORKING POINT COORDINATES

WP NO.	NORTHING (Y)	EASTING (X)
1	784300.99	809063.89
2	784295.92	809067.10
3	784284.81	809061.28
4	784290.95	809067.60

TABLE OF BRIDGE QUANTITIES

ITEM	UNIT	QTY.
CONSTRUCTION ACCESS	LS	LS
ENVIRONMENTAL HEALTH AND SAFETY	LS	LS
SETTLEMENT MONITORING PROGRAM	LS	LS
STRUCTURE EXCAVATION - EARTH (COMPLETE)	CY	70
STRUCTURE EXCAVATION - ROCK (COMPLETE)	CY	10
HANDLING WATER (SITE NO.1)	LS	LS
ANTI-TRACKING PAD	SY	100
GRANULAR FILL	CY	20
PERVIOUS STRUCTURE BACKFILL	CY	55
SEDIMENTATION CONTROL SYSTEM	LF	1000
CLASS "A" CONCRETE	CY	30
DEFORMED STEEL BARS	LB	1300
WELDED WIRE FABRIC	LB	200
DRILLING AND GROUTING REINFORCING BARS	LF	10
REBUILD MASONRY WELL	CY	2
REPOINT MORTAR JOINTS	LF	70
BEDDING MATERIAL	CY	10
72" RC PIPE - CLASS V	LF	8
JACKING 72" RC PIPE - CLASS V	LF	56
TEMPORARY SHEET PILING (RAILROAD)	SF	700
PRECAST CONCRETE CURBING	LF	25
CONSERVATION SEEDING FOR SLOPES	SY	550
WETLAND GRASS ESTABLISHMENT	SF	655
SELECTIVE CLEARING AND THINNING (SITE NO.1)	LS	LS
REMOVAL OF EXISTING MASONRY	CY	40
MOBILIZATION AND PROJECT CLOSEOUT	LS	LS
CONSTRUCTION STAKING (SITE NO 1)	LS	LS

RAILROAD MONUMENTED CENTER LINE CURVE DATA

△ = 15° 02' 35"
R = 1488.50'
L = 390.73'
T = 196.51'
D = 3° 51' 00"

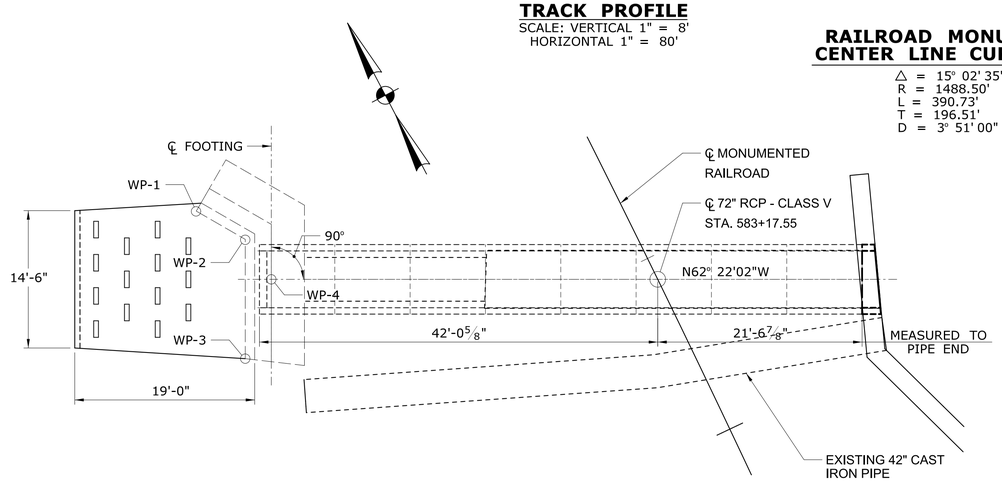

LAYOUT PLAN
SCALE: 1/8" = 1'-0"

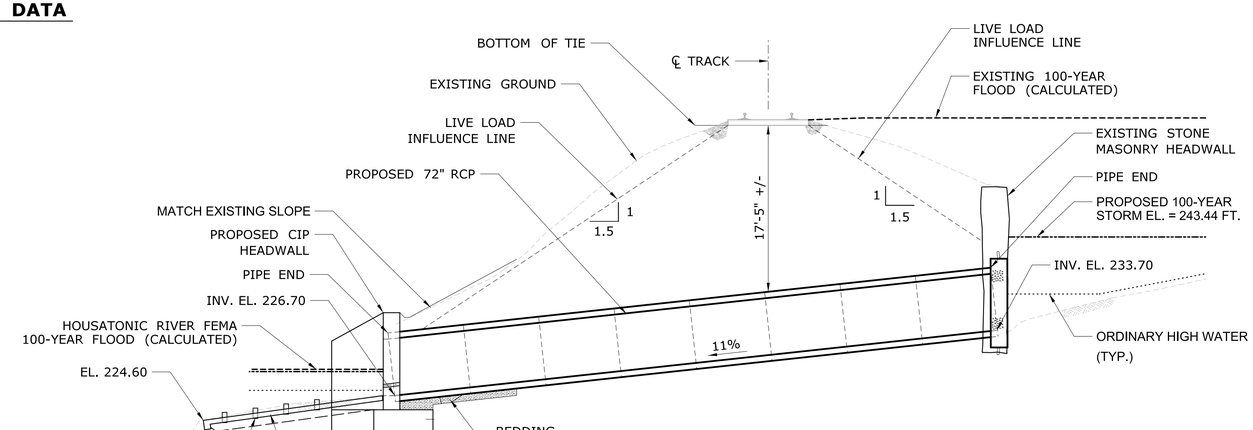

LONGITUDINAL SECTION
SCALE: 1/8" = 1'-0"
(LOOKING NORTH UPSTATION)

REV.	DATE	REVISION DESCRIPTION	SHEET NO.
-	-	-	-
-	-	-	-
-	-	-	-
-	-	-	-
-	-	-	-
-	-	-	-

THE INFORMATION, INCLUDING ESTIMATED QUANTITIES OF WORK, SHOWN ON THESE SHEETS IS BASED ON LIMITED INVESTIGATIONS BY THE STATE AND IS IN NO WAY WARRANTED TO INDICATE THE CONDITIONS OF ACTUAL QUANTITIES OF WORK WHICH WILL BE REQUIRED.

PLOTTED: 7/25/2018

DESIGNER/DRAFTER: BC/CR
CHECKED BY: RB
SCALE AS NOTED

STATE OF CONNECTICUT
DEPARTMENT OF TRANSPORTATION

FILENAME: ...\SB_MSH_170_3192_MP_15.00_S-003.DGN

LOCHNER
H.W. LOCHNER, INC
55 Hartland St
East Hartford, CT 06108

APPROVED BY: R. BRAY DATE: 12/06/17

STATE OF CONNECTICUT RICHARD A. BRAY LICENSED PROFESSIONAL ENGINEER

PROJECT TITLE:
BRIDGE NO. 09200R HOUSATONIC RAILROAD MP 15.00 OVER UNNAMED BROOK

TOWN: **NEW MILFORD**

DRAWING TITLE: **PROFILE, QUANTITIES, AND TYPICAL SECTION**

PROJECT NO. **170-3192**
DRAWING NO. **S1-3**
SHEET NO. **03.01.04**

B-1-1

Driller: Trent Roe	**Connecticut DOT Boring Report**	Hole No.: B-1-1	
Inspector: Robert Marshall	Town: NEW MILFORD	Stat./Offset: MP 15.00	
Engineer: GeoDesign, Inc.	Project No.: 170-3192 (Geo: 0331-019.00)	Northing: 784295.4	
Start Date: 3-24-14	Route No.:	Easting: 809103.1	
Finish Date: 3-24-14	Bridge No.: 09200R	Surface Elevation: 256	
Project Description: Four Railroad Bridges on the Berkshire Line of the Housatonic Railroad			
Casing Size/Type: HW-4" ID	Sampler Type/Size: SS:1-3/8" ID	Core Barrel Type: NQ(dt)1-7/8" ID	
Hammer Wt.: 300 lb. Fall: 24in.	Hammer Wt.: 140 lb. Fall: 30 in.		
Groundwater Observations: @25.9 feet after 0 hours			

Depth (ft)	Sample Type/No.	Blows on Sampler per 6 inches	Pen. (in.)	Rec. (in.)	RQD %	Generalized Strata Description	Material Description and Notes	Elevation (ft)
0						Stone Ballast		
	S-1	8 8 9 9	24	6		Fill	Medium dense, gray brown fine to coarse SAND and fine to coarse GRAVEL, trace Silt, (damp)	255
	S-2	8 8 7 8	24	21			Medium dense, brown to light brown fine to medium SAND, little (-) Silt, trace fine Gravel (damp)	
5	S-3	5 7 7 6	24	18			Medium dense, brown fine SAND, little Silt (damp)	250
	S-4	5 5 4 5	24	14			Loose, orange brown fine to medium SAND, little Silt, trace fine to coarse Gravel, (damp)	
10	S-5	4 4 3 3	24	16			Loose, brown fine to coarse SAND, little Silt, little fine to coarse Gravel, (damp)	245
	S-6	3 4 5 4	24	9			Loose, brown fine to coarse SAND, little Silt, little fine to coarse Gravel, (damp)	
15	S-7	4 4 4 4	24	8			Loose, brown fine to coarse SAND, little Silt, little fine to coarse Gravel, (damp)	240
	S-8	6 6 9 11	24	12			Medium dense, brown fine to coarse SAND, some (-) fine to coarse Gravel, little (-) Silt, (damp)	
20	S-9	5 5 6 5	24	7			Medium dense, orange brown fine to coarse SAND, some fine to coarse Gravel, trace Silt, (wet)	235
25	S-10	4 4 17 12	24	12		Till	Medium dense, gray brown fine to medium SAND, some Silt, little fine to coarse Gravel, (wet)	230
						Bedrock		
30							Good Quality, Moderately Hard, Slightly Weathered	

Sample Type: S = Split Spoon C = Core UP = Undisturbed Piston V = Vane Shear Test

Proportions Used: Trace = 1 - 10%, Little = 10 - 20%, Some = 20 - 35%, And = 35 - 50%

Total Penetration in Earth: 27.5ft Rock: 5ft	NOTES: 1. Pilot hole advanced to 15 feet using 4" OD solid stem augers then switched to 4" ID flush joint casing, with casing refusal at 27.5 feet.	Sheet 1 of 2
No. of Soil Samples: 10 No. of Core Runs: 1		SM-001-M REV. 1/02

B-1-2

Driller: Trent Roe	**Connecticut DOT Boring Report**	Hole No.: B-1-1	
Inspector: Robert Marshall	Town: NEW MILFORD	Stat./Offset: MP 15.00	
Engineer: GeoDesign, Inc.	Project No.: 170-3192 (Geo: 0331-019.00)	Northing: 784295.4	
Start Date: 3-24-14	Route No.:	Easting: 809103.1	
Finish Date: 3-24-14	Bridge No.: 09200R	Surface Elevation: 256	
Project Description: Four Railroad Bridges on the Berkshire Line of the Housatonic Railroad			
Casing Size/Type: HW-4" ID	Sampler Type/Size: SS:1-3/8" ID	Core Barrel Type: NQ(dt)1-7/8" ID	
Hammer Wt.: 300 lb. Fall: 24in.	Hammer Wt.: 140 lb. Fall: 30 in.		
Groundwater Observations: @25.9 feet after 0 hours			

Depth (ft)	Sample Type/No.	Blows on Sampler per 6 inches	Pen. (in.)	Rec. (in.)	RQD %	Generalized Strata Description	Material Description and Notes	Elevation (ft)
30	C-1		60	51	77	Bedrock *(con't)*	gray SCHIST [Core Times (min/ft.): 8,8,9,13,7]	225
							END OF BORING 32.5ft	
35								220
40								215
45								210
50								205
55								200
60								

Sample Type: S = Split Spoon C = Core UP = Undisturbed Piston V = Vane Shear Test

Proportions Used: Trace = 1 - 10%, Little = 10 - 20%, Some = 20 - 35%, And = 35 - 50%

Total Penetration in Earth: 27.5ft Rock: 5ft	NOTES: 1. Pilot hole advanced to 15 feet using 4" OD solid stem augers then switched to 4" ID flush joint casing, with casing refusal at 27.5 feet.	Sheet 2 of 2
No. of Soil Samples: 10 No. of Core Runs: 1		SM-001-M REV. 1/02

REV.	DATE	REVISION DESCRIPTION	SHEET NO.
-	-	-	-
-	-	-	-
-	-	-	-
-	-	-	-
-	-	-	-
-	-	-	-

THE INFORMATION, INCLUDING ESTIMATED QUANTITIES OF WORK, SHOWN ON THESE SHEETS IS BASED ON LIMITED INVESTIGATIONS BY THE STATE AND IS IN NO WAY WARRANTED TO INDICATE THE CONDITIONS OF ACTUAL QUANTITIES OF WORK WHICH WILL BE REQUIRED.

PLOTTED: 7/25/2018

DESIGNER/DRAFTER: GEODESIGN

CHECKED BY: GEODESIGN

NOT TO SCALE

STATE OF CONNECTICUT
DEPARTMENT OF TRANSPORTATION

FILENAME: ...\SB_MSH_170_3192_MP_15.00_S-004.dgn

GEODESIGN INCORPORATED
Geotechnical Construction Environmental
Materials Research & Testing
964 Southford Road Middlebury, CT 06762
Telephone: (203) 758-8836 Fax: (203) 758-8849

APPROVED BY: R. BRAY DATE: 12/06/17

STATE OF CONNECTICUT RICHARD A. BRAY LICENSED PROFESSIONAL ENGINEER

PROJECT TITLE: **BRIDGE NO. 09200R HOUSATONIC RAILROAD MP 15.00 OVER UNNAMED BROOK**

TOWN: **NEW MILFORD**

DRAWING TITLE: **BORING LOGS-1**

PROJECT NO. **170-3192**

DRAWING NO. **S1-4**

SHEET NO. **03.01.05**

B-1-3

Driller: Trent Roe	**Connecticut DOT Boring Report**	Hole No.: B-1-3	
Inspector: Robert Marshall	Town: NEW MILFORD	Stat./Offset: MP 15.00	
Engineer: GeoDesign, Inc.	Project No.: 170-3192 (Geo: 0331-019.00)	Northing: 784207.3	
Start Date: 3-21-14	Route No.:	Easting: 809100.2	
Finish Date: 3-21-14	Bridge No.: 09200R	Surface Elevation: 256	
Project Description: Four Railroad Bridges on the Berkshire Line of the Housatonic Railroad			
Casing Size/Type: HSA 4-1/4 ID	Sampler Type/Size: SS:1-3/8" ID	Core Barrel Type:	
Hammer Wt.: Fall: in.	Hammer Wt.: 140 lb. Fall: 30 in.		
Groundwater Observations: @None Observed			

Depth (ft)	Sample Type/No.	Blows on Sampler per 6 inches	Pen. (in.)	Rec. (in.)	RQD %	Generalized Strata Description	Material Description and Notes	Elevation (ft)
0	S-1	6 8 9 9	24	12		Stone Ballast Fill	Medium dense, brown to black fine to medium SAND, little Silt, little fine to coarse Gravel, (damp)	255
	S-2	9 6 10 7	24	11			Medium dense, brown fine to coarse SAND, some fine to coarse Gravel, little (-) Silt, (damp)	
5	S-3	6 7 5 5	24	4			Medium dense, brown fine to medium SAND, some coarse Gravel, little Silt, (damp)	250
	S-4	5 5 7 21	24	6			Medium dense, orange brown fine to coarse SAND, some (-) fine to coarse Gravel, little (-) Silt, (damp)	
10	S-5	12 13 10 9	24	2			Medium dense, brown fine to medium SAND, little fine to coarse Gravel, little Silt, (damp)	245
	S-6	13 9 7	24	12			Medium dense, orange brown fine to medium SAND, some fine to coarse Gravel, little Silt, (damp)	
15	S-7	9 16 41 25	24	16		Till	Very dense, Top 10": gray fine to medium SAND, some Silt, little fine to coarse Gravel, (damp) Bottom 6": orange brown fine to medium SAND, little fine to coarse Gravel, little Silt, trace Mica, (damp)	240
20	S-8	27 30 50/5" -	17	13			Very dense, brown to orange brown fine to coarse SAND, some (+) Silt, little (+) fine to coarse Gravel, (damp)	235
	S-9	50/0" - - -	0	0			Very dense (spoon refusal), NO PENETRATION, NO RECOVERY END OF BORING 22ft	
25								230
30								

Sample Type: S = Split Spoon C = Core UP = Undisturbed Piston V = Vane Shear Test
Proportions Used: Trace = 1 - 10%, Little = 10 - 20%, Some = 20 - 35%, And = 35 - 50%

Total Penetration in Earth: 22.0ft Rock: 0ft	NOTES: 1. Auger reusal at 4.5 feet, boring relocated 2 feet south. 2. Pilot hole to 10 feet using 4" solid stem augers then switched to 4" ID hollow stem augers. 3. Auger and split spoon refusal at 22 feet below grade.	Sheet 1 of 1
No. of Soil Samples: 9 No. of Core Runs: 0		SM-001-M REV. 1/02

B-1-4

Driller: Jaime Lloret	**Connecticut DOT Boring Report**	Hole No.: B-1-4	
Inspector: U. LaFosse	Town: New Milford, Connecticut	Stat./Offset:	
Engineer: GeoDesign, Inc.	Project No.: State Proj. No. 170-3192	Northing: 784315.6	
Start Date: 10-29-15	Route No.:	Easting: 809031.6	
Finish Date: 10-29-15	Bridge No.: 09200R	Surface Elevation: 225	
Project Description: Bridge No. 09200R over Stream Mile Post 15.00 over Housatonic RR Line			
Casing Size/Type: HSA: 2.25" ID	Sampler Type/Size: SS: 1.38" ID	Core Barrel Type: NV 2	
Hammer Wt.: N/A Fall: N/Ain.	Hammer Wt.: 140 lbs. Fall: 30 in.		
Groundwater Observations: @7' after After 5 min. hours			

Depth (ft)	Sample Type/No.	Blows on Sampler per 6 inches	Pen. (in.)	Rec. (in.)	RQD %	Generalized Strata Description	Material Description and Notes	Elevation (ft)
0	S-1	1 4 12 14	24	8		Fill	Medium dense, brown fine to coarse SAND, some Silt, trace (-) fine Roots	225
						Alluvial Sand and Gravel		
5	S-2	13 15 19 22	24	9			Dense, brown to white fine to medium SAND, little (+) Silt, trace fine Gravel	220
10	S-3	27 69 86 50/2"	20	17		Glacial Till	Very dense, gray brown fine to coarse GRAVEL and fine to coarse SAND, little (+) Silt	215
15	C-1		36	5			COBBLE and BOULDER Fragments	210
						Bedrock		
20	C-2		60	44	18		White to grayish, Moderately Hard, dolomitic granitic Gneiss, Schist, and Quartzite with frequent low angle fractures REC=44/60=73% RQD=11/60=18% [Coring time (min./ft.)= 7, 8, 7, 9, 8)]	205
25	C-3		60	53	45		White with grayish striations, Moderately Hard, dolomitic granitic Gneiss, Schist, and Quartzite with few low angle fractures REC=53/60=88% RQD=27/60=45% [Coring time (min./ft.)= 9, 7, 6, 8, 8)]	200
							END OF BORING 28ft	
30								195

Sample Type: S = Split Spoon C = Core UP = Undisturbed Piston V = Vane Shear Test
Proportions Used: Trace = 1 - 10%, Little = 10 - 20%, Some = 20 - 35%, And = 35 - 50%

Total Penetration in Earth: 18ft Rock: 10ft	NOTES: 1.) Auger chatter from 1.5 to 5 feet. 2.) Auger chatter from 8 to 10 feet. 3.) Core barrel plugged at 18.0' depth. 4.) Auger chatter 15 to 18'. 5.) First core run discarded (inferred cobbles and boulders). 6.) Hammer lifted with Cathead	Sheet 1 of 1
No. of Soil Samples: 3 No. of Core Runs: 3		SM-001-M REV. 1/02

C-1 C-2 C-3

Jaime Lloret DRILLER Ulrich Lafosse INSPECTOR	**MASONRY CORING REPORT** **ASSOCIATED BORINGS CO., INC.** **119 MARGARET CIRCLE, NAUGATUCK, CT 06770** **Tel (203) 729-5435 Fax (203) 729-5116**	SHEET 1 OF 1 3-inch Core Drill DRILLING EQUIPMENT	
SOILS ENGINEER	PROJECT NAME: HRRC Bridge # 9200R M.P.15 PROJECT NUMBER: 170-3192	GeoDesign, Inc. CLIENT	
Surface Elevation:	LOCATION: New Milford, Connecticut		
Date Started: 10/30/2015 Date Finished: 11/3/2015	Type Size I. D. 3 in Hammer Fall	Hole No. **See Below** Line & Station Offset N Coordinate E. Coordinate	

	PENETRATION	RECOVERY				RQD	
C-1	72"	55/72= 76%	76%			45/72= 62%	62%
C-2	77"	64/77= 90%	90%			54/77= 70%	70%
C-3	38"	33/38= 87%	87%			14/37= 37%	37%

LEGEND

C-1 HEADWALL CORE DESIGNATION AND LOCATION

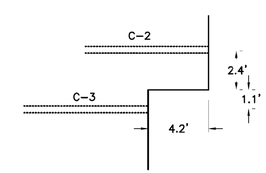

UPSTREAM HEADWALL PARTIAL SECTION

VIEW TO THE NORTH - NOT TO SCALE

REV.	DATE	REVISION DESCRIPTION	SHEET NO.
-	-	-	-
-	-	-	-
-	-	-	-
-	-	-	-
-	-	-	-
-	-	-	-

THE INFORMATION, INCLUDING ESTIMATED QUANTITIES OF WORK, SHOWN ON THESE SHEETS IS BASED ON LIMITED INVESTIGATIONS BY THE STATE AND IS IN NO WAY WARRANTED TO INDICATE THE CONDITIONS OF ACTUAL QUANTITIES OF WORK WHICH WILL BE REQUIRED.

PLOTTED: 7/25/2018

DESIGNER/DRAFTER: GEODESIGN
CHECKED BY: GEODESIGN
NOT TO SCALE

STATE OF CONNECTICUT
DEPARTMENT OF TRANSPORTATION

FILENAME: ...\SB_MSH_170_3192_MP_15.00_S-005.dgn

GEODESIGN INCORPORATED
Geotechnical · Construction · Environmental
Engineers & Scientists
984 Southford Road · Middlebury, CT 06762
Telephone: (203) 758-8505 Fax: (203) 758-8842

APPROVED BY: R. BRAY DATE: 12/06/17

STATE OF CONNECTICUT · RICHARD A. BRAY · LICENSED PROFESSIONAL ENGINEER

PROJECT TITLE:
BRIDGE NO. 09200R HOUSATONIC RAILROAD MP 15.00 OVER UNNAMED BROOK

TOWN: **NEW MILFORD**

DRAWING TITLE: **BORING LOGS-2 AND CORING LOG**

PROJECT NO. **170-3192**
DRAWING NO. **S1-5**
SHEET NO. **03.01.06**

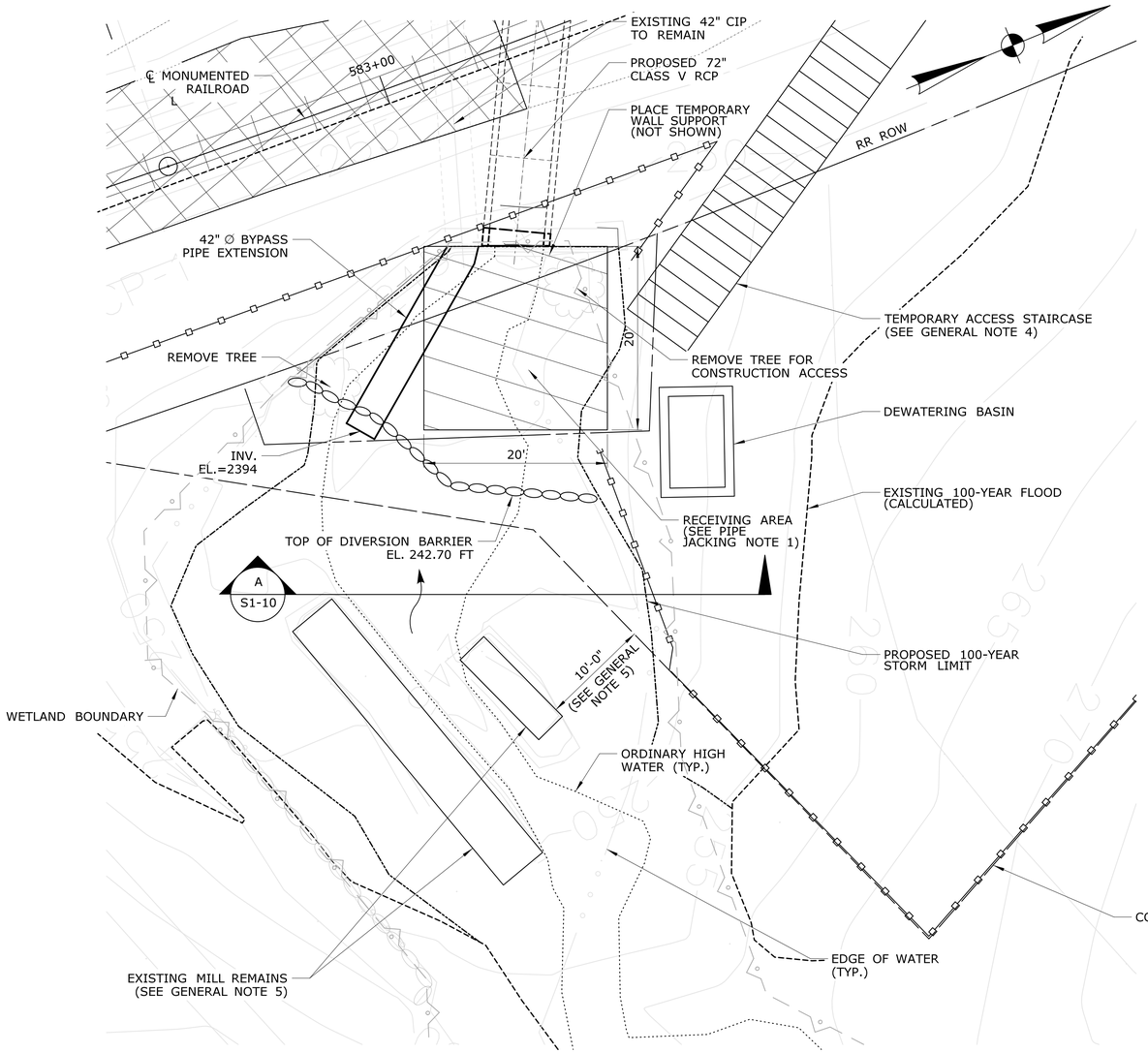

PLAN AT INLET

SCALE: 1/8" = 1'

GENERAL NOTES:

1. THE CONTRACTOR SHALL INSTALL SEDIMENTATION CONTROL SYSTEM AS SHOWN ON THE PLANS OR AS DIRECTED BY THE ENGINEER.
2. CONSTRUCTION ACCESS SHALL BE FROM RIVER ROAD TO THE RAILROAD TRACK TO THE WORK SITE. THE ACCESS AREA IS WITHIN THE ACTIVE HOUSATONIC RAILROAD RIGHT-OF-WAY AND ALL CONTRACTOR ACTIVITIES SHALL BE PERFORMED IN ACCORDANCE WITH THE CONTRACT SPECIFICATIONS INCLUDING "WORK ON RAILROAD PROPERTY" AND "PROSECUTION AND PROGRESS".
3. A TRACK ACCESS AREA SHALL BE CONSTRUCTED AS SHOWN ON THE PLANS. THIS AREA WILL ALLOW CONSTRUCTION PERSONNEL AND EQUIPMENT TO CROSS OVER THE TRACK FOR CERTAIN CONSTRUCTION ACTIVITIES AT TIMES ALLOWED BY THE SPECIFICATIONS. ACCESS AREAS SHALL BE CONSTRUCTED BY HRR IN THE APPROXIMATE LOCATIONS SHOWN. THE CONTRACTOR SHALL COORDINATE LIMITS OF ACCESS AREAS WITH THE ENGINEER.
4. THE COST TO CONSTRUCT A TEMPORARY ACCESS STAIRCASE ON THE EMBANKMENT SLOPE SHALL BE PAID UNDER THE ITEM "CONSTRUCTION ACCESS"
5. THE DISTANCE SHOWN REPRESENTS THE MINIMUM OFFSET FROM ANY CONSTRUCTION ACTIVITIES TO THE NEAREST FACE OF ANY HISTORIC MILL REMAINS. THE CONTRACTOR SHALL ENSURE THAT WORK ACTIVITIES HAVE NO IMPACT ON HISTORIC MILL REMAINS LOCATED ADJACENT TO CONSTRUCTION AREA.

PIPE JACKING NOTES:

1. THE SIZE OF THE RECEIVING AREA IS APPROXIMATE AND IS SHOWN HERE ONLY AS REFERENCE. THE CONTRACTOR SHALL DETERMINE THE ACTUAL SIZE REQUIRED TO COMPLETE THE JACKING OPERATION. THE COST TO PREPARE THE JACKING AND RECEIVING AREAS SHALL BE PAID UNDER THE ITEM "JACKING 72" RC PIPE - CLASS V"
2. THE CONTRACTOR IS ADVISED THAT PIPE JACKING MAY REQUIRE WORK WITHIN CONFINED AREAS. THE CONTRACTOR SHALL PERFORM ALL WORK WITH EQUIPMENT AND METHODS THAT SATISFY ALL HEALTH AND SAFETY REGULATIONS AND SHALL PROVIDE SUPPLEMENTARY VENTILATION IF NECESSARY. ALL WORK ASSOCIATED WITH SATISFYING SAFETY AND HEALTH REGULATIONS SHALL BE CONSIDERED INCIDENTAL TO ASSOCIATED CONSTRUCTION ITEMS.

STAGE CONSTRUCTION (GENERAL):

THE FOLLOWING STEPS WILL BE PERFORMED BY THE CONTRACTOR, UNLESS OTHERWISE NOTED, DURING SHORT TERM TRACK OUTAGES (DAILY OR WEEKEND)

1. INSTALL SEDIMENTATION CONTROL SYSTEM.
2. CONSTRUCT TEMPORARY ACCESS ROADWAYS AND ANTI-TRACKING PADS.
3. INSTALL WATER HANDLING SYSTEM AT INLET AND OUTLET ENDS OF EXISTING MASONRY STRUCTURE. THE COST TO INSTALL THE WATER HANDLING SYSTEM, INCLUDING THE DIVERSION BARRIERS, 42" DIAMETER BYPASSS PIPE EXTENSIONS, AND DEWATERING BASINS SHALL BE PAID UNDER THE ITEM "HANDLING WATER (SITE NO. 1)"
4. ESTABLISH MONITORING POINTS AT APPROVED LOCATIONS AND BEGIN TAKING MEASUREMENTS AS REQUIRED FOR THE SETTLEMENT MONITORING PROGRAM.

STAGE CONSTRUCTION (INLET):

1. INSTALL TEMPORARY WALL SUPPORT SYSTEM.
2. PREPARE RECEIVING AREA TO MEET THE REQUIREMENTS OF THE CONTRACTOR'S APPROVED PIPE JACKING SYSTEM.
3. JACK 72" DIAMETER RCP INTO PROPOSED LOCATION. FILL VOIDS BETWEEN PIPE AND EXISTING ARCH WITH GROUT.
4. CONSTRUCT BEVELED INLET SECTION FOLLOWING COMPLETION OF THE PIPE JACKING. INLET SECTION SHALL CLOSELY MATCH THE EXISTING MASONRY HEADWALL GEOMETRY.
5. REMOVE TEMPORARY WALL SUPPORT SYSTEM. REPAIR AND REPOINT EXISTING STONE MASONRY HEADWALL.
6. RESTORE SITE TO EXISTING CONDITION. REMOVE WATER HANDLING SYSTEM, RECEIVING AREA, AND SEDIMENTATION CONTROL SYSTEM. REMOVE TEMPORARY ACCESS STAIRCASE.

STAGING AREA NOTES:

1. THE CONTRACTOR SHALL UTILIZE THIS AREA TO ENTER TRACK ACCESS AREA (BY HRR).
2. EQUIPMENT OPERATING ENVELOPE SHOWN IS BASED ON AREMA PLATE "F"
3. FOR TEMPORARY TRACK ACCESS DETAIL, SEE "STAGE CONSTRUCTION - 2"

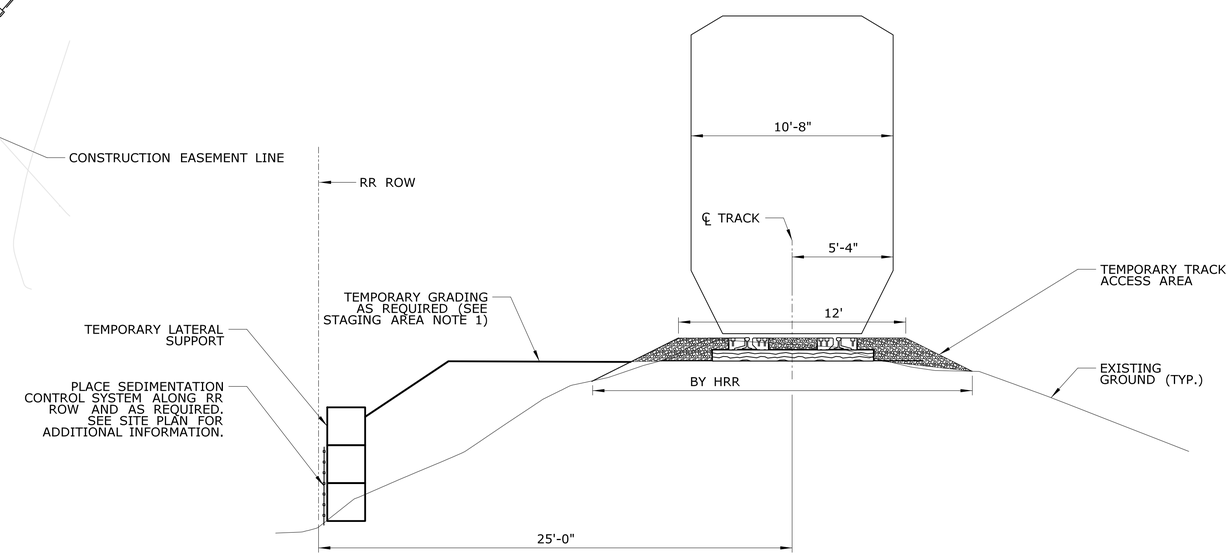

SECTION A

SCALE: 1/4" = 1' (S1-1)

LEGEND

SEDIMENTATION CONTROL SYSTEM

TRACK ACESS AREA (BY HRR)

TEMP. HYDRAULIC DATA	
AVERAGE DAILY FLOW	1.3 CFS
AVERAGE SPRING FLOW	2.5 CFS
TEMPORARY DESIGN DISCHARGE	35 CFS
TEMPORARY DESIGN FREQUENCY	2-YEAR
TEMPORARY WATER SURFACE ELEVATION UPSTREAM	242.21
TEMPORARY WATER SURFACE ELEVATION DOWNSTREAM	221.34

REV.	DATE	REVISION DESCRIPTION	SHEET NO.
-	-	-	-
-	-	-	-
-	-	-	-
-	-	-	-
-	-	-	-
-	-	-	-

THE INFORMATION, INCLUDING ESTIMATED QUANTITIES OF WORK, SHOWN ON THESE SHEETS IS BASED ON LIMITED INVESTIGATIONS BY THE STATE AND IS IN NO WAY WARRANTED TO INDICATE THE CONDITIONS OF ACTUAL QUANTITIES OF WORK WHICH WILL BE REQUIRED.

PLOTTED: 7/25/2018

DESIGNER/DRAFTER: BC/CR
CHECKED BY: RB
SCALE AS NOTED

STATE OF CONNECTICUT
DEPARTMENT OF TRANSPORTATION

FILENAME: ...\SB_MSH_170_3192_MP_15.00_S-006.dgn

LOCHNER
H.W. LOCHNER, INC
55 Hartland St
East Hartford, CT 06108

APPROVED BY: R. BRAY DATE: 12/06/17

STATE OF CONNECTICUT RICHARD A. BRAY LICENSED PROFESSIONAL ENGINEER

PROJECT TITLE: BRIDGE NO. 09200R HOUSATONIC RAILROAD MP 15.00 OVER UNNAMED BROOK

TOWN: NEW MILFORD

DRAWING TITLE: STAGE CONSTRUCTION - 1

PROJECT NO. 170-3192
DRAWING NO. S1-6
SHEET NO. 03.01.07

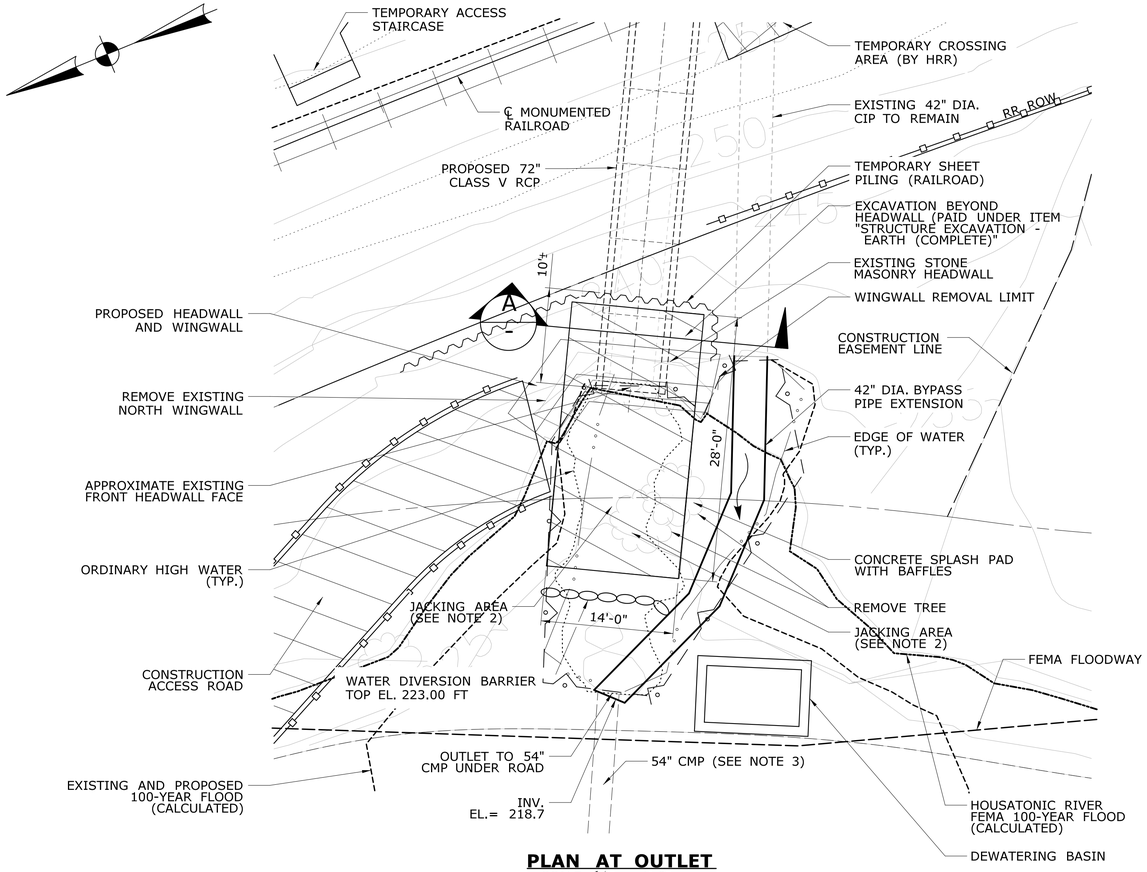

PLAN AT OUTLET

SCALE: 1/8" = 1'-0"

STAGE CONSTRUCTION (OUTLET):

1. PLACE TEMPORARY SHEET PILING (RAILROAD) AS SHOWN ON THE PLANS. SUPPORT EXISTING 42" DIAMETER CIP.
2. REMOVE EXISTING STONE MASONRY HEADWALL AND WINGWALLS TO LIMITS SHOWN. REMOVE STEEL LINER SECTIONS.
3. CONTINUE REMOVAL EXISTING STONE MASONRY ARCH AND STEEL LINER BEHIND STONE MASONRY HEADWALL TO FACE OF TEMPORARY EARTH RETAINING SYSTEM.
4. INSTALL JACKING AREA AS REQUIRED FOR THE PIPE JACKING OPERATION. INSTALL REACTION MEMBERS. PLACE JACKS.
5. BEGIN JACKING PROCEDURE TO PUSH THE 72" RCP INTO PLACE. INCLUDED AS PART OF THE PIPE JACKING OPERATION WILL BE THE REMOVAL OF OBSTRUCTIONS FROM THE LEADING END OF THE PIPE AS IT IS BEING JACKED. THESE OBSTRUCTIONS MAY INCLUDE BOULDERS, OR SECTIONS OF THE EXISTING MASONRY STRUCTURE. INCLUDING THE STEEL LINER.
6. ASSEMBLE PIPE SECTIONS IN THE WORK AREA AND JACK INTO PLACE. CONTINUE ADDING ADDITIONAL SECTIONS. CONTINUE JACKING PIPE SECTIONS INTO PLACE UNTIL PIPE LEADING END REACHES INLET HEADWALL.
7. EXCAVATE AND PLACE GRANULAR FILL AS SHOWN ON THE PLANS. CONSTRUCT CIP CONCRETE FOOTING FOR PROPOSED ENDWALL.
8. PLACE PIPE BEDDING MATERIAL TO THE LIMITS SHOWN. PLACE FINAL SECTION OF PIPE.
9. CONSTRUCT CIP CONCRETE HEADWALL AND WINGWALLS. BACKFILL TO REESTABLISH SLOPE.
10. INSTALL SPLASH PAD WITH BAFFLES.
11. REMOVE WATER HANDLING SYSTEM.

NOTES:

1. THE COST TO REMOVE STEEL ARCH LINER AND FOUNDATIONS WITHIN JACKING AREA LIMITS SHALL BE INCIDENTAL TO THE COST OF THE ITEM "REMOVAL OF EXISTING MASONRY".
2. THE SIZE OF THE JACKING AREA IS APPROXIMATE AND IS SHOWN HERE ONLY AS A REFERENCE. THE CONTRACTOR SHALL DETERMINE THE ACTUAL SIZE REQUIRED TO COMPLETE THE JACKING OPERATION.
3. THE CONTRACTOR SHALL PROTECT 54" CMP FROM ANY DAMAGE DUE TO PIPE JACKING ACTIVITIES.

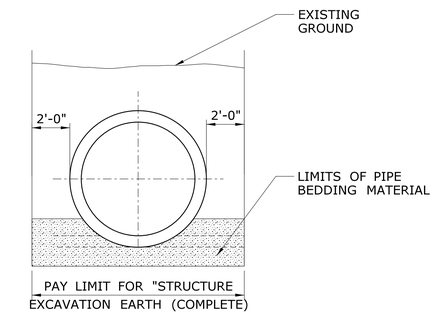

SECTION A

SCALE 1/4"=1'-0"

CROSSING NOTES:

1. THE TRACK ACCESS DETAIL SHALL BE THE RESPONSIBILITY OF HRR.
2. TEMPORARY CROSSING SHALL BE CONSTRUCTED WITH MINIMUM LENGTH REQUIRED FOR EQUIPMENT TO ACCESS THE TRACK WITHOUT DAMAGING THE RAILS.

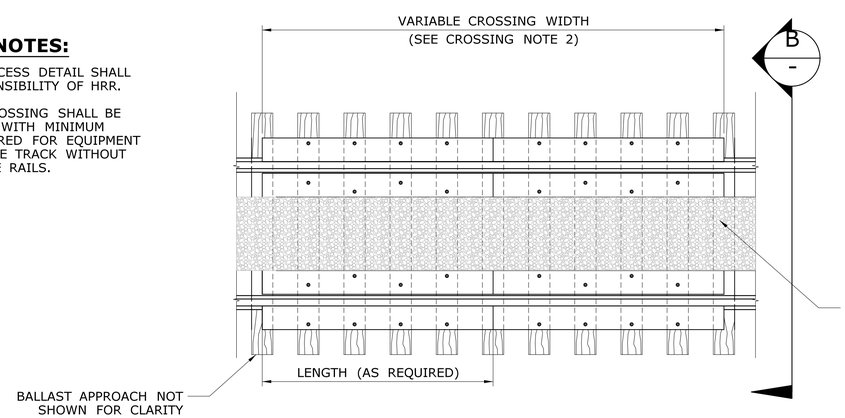

TEMPORARY TRACK ACCESS DETAIL

NTS

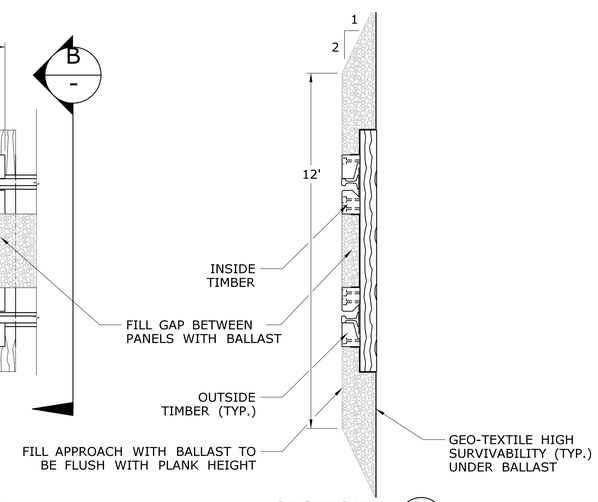

SECTION B

NTS

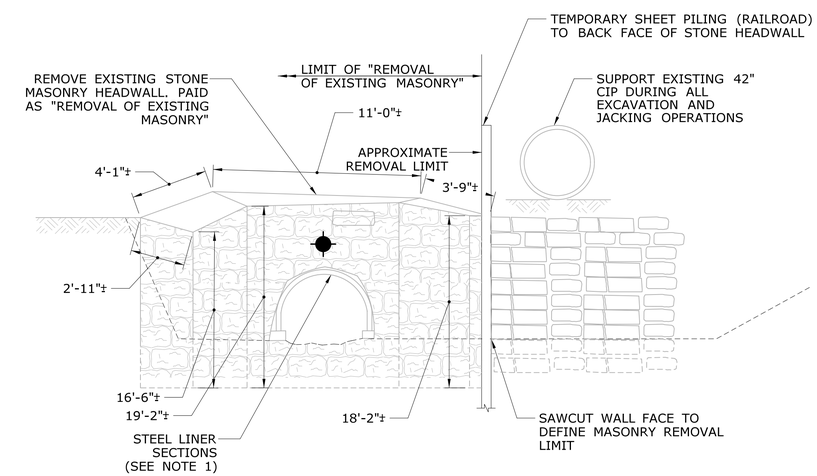

HEADWALL REMOVAL LIMITS

SCALE 1/4"=1'0"

REV.	DATE	REVISION DESCRIPTION	SHEET NO.
-	-	-	-
-	-	-	-
-	-	-	-
-	-	-	-
-	-	-	-
-	-	-	-

THE INFORMATION, INCLUDING ESTIMATED QUANTITIES OF WORK, SHOWN ON THESE SHEETS IS BASED ON LIMITED INVESTIGATIONS BY THE STATE AND IS IN NO WAY WARRANTED TO INDICATE THE CONDITIONS OF ACTUAL QUANTITIES OF WORK WHICH WILL BE REQUIRED.

PLOTTED: 7/25/2018

DESIGNER/DRAFTER: BC/CR
CHECKED BY: RB
SCALE AS NOTED

STATE OF CONNECTICUT
DEPARTMENT OF TRANSPORTATION

FILENAME: ...\SB_MSH_170_3192_MP_15.00_S-007.dgn

LOCHNER
H.W. LOCHNER, INC
55 Hartland St
East Hartford, CT 06108

APPROVED BY: R. BRAY DATE: 12/06/17

STATE OF CONNECTICUT RICHARD A. BRAY LICENSED PROFESSIONAL ENGINEER

PROJECT TITLE: BRIDGE NO. 09200R HOUSATONIC RAILROAD MP 15.00 OVER UNNAMED BROOK

TOWN: NEW MILFORD

DRAWING TITLE: STAGE CONSTRUCTION - 2

PROJECT NO. 170-3192
DRAWING NO. S1-7
SHEET NO. 03.01.08

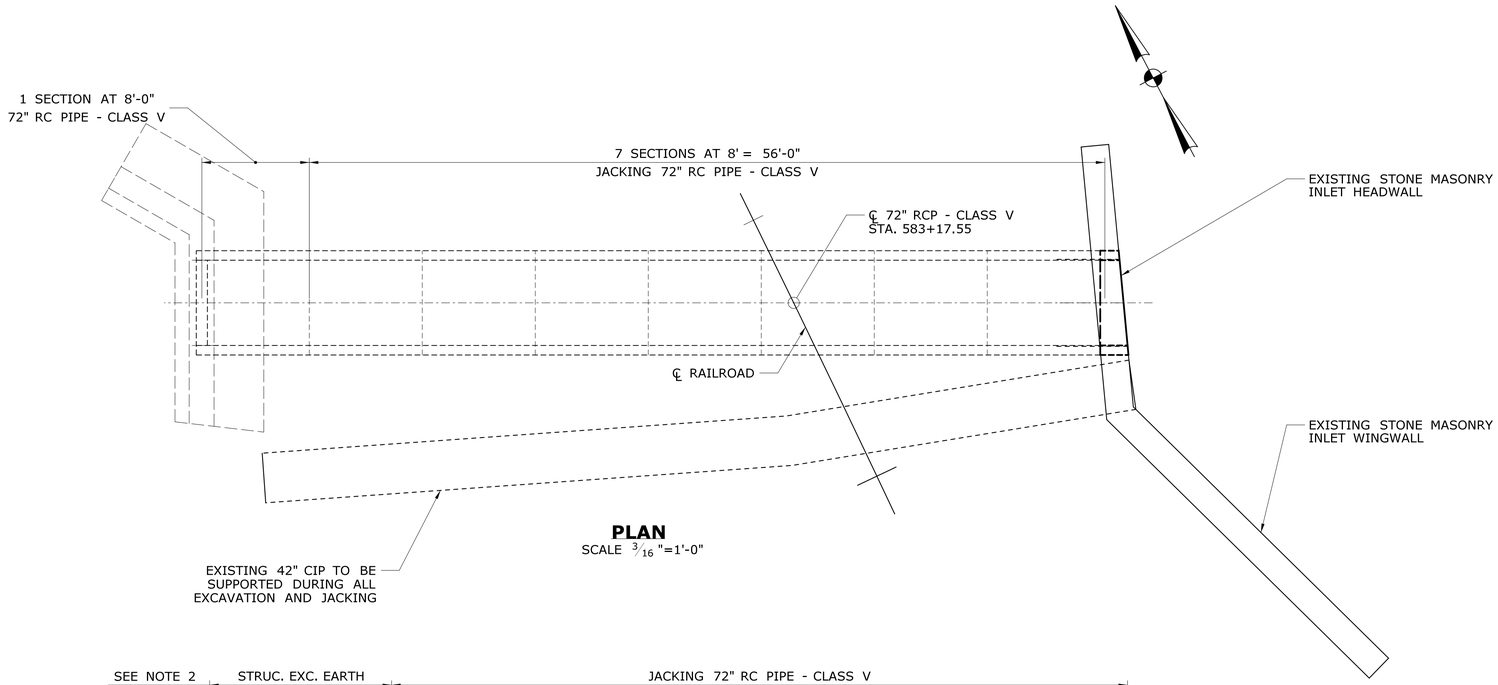

PLAN
SCALE $^{3}/_{16}$"=1'-0"

NOTES:

1. REMOVAL OF EXISTING MASONRY HEADWALL SHALL BE PAID UNDER THE ITEM "REMOVAL OF EXISTING MASONRY". ALL OTHER EXCAVATION, AND THE REMOVAL OF EXISTING STEEL LINED STONE MASONRY ARCH STRUCTURE WITHIN THESE LIMITS, SHALL BE PAID AS "STRUCTURE EXCAVATION -EARTH (COMPLETE)".
2. REMOVAL OF ANY AND ALL ROCK, METAL, AND ANY OTHER OBSTRUCTIONS SHALL BE PAID UNDER THE ITEMS SHOWN WITHIN THE SPECIFIED LIMITS.

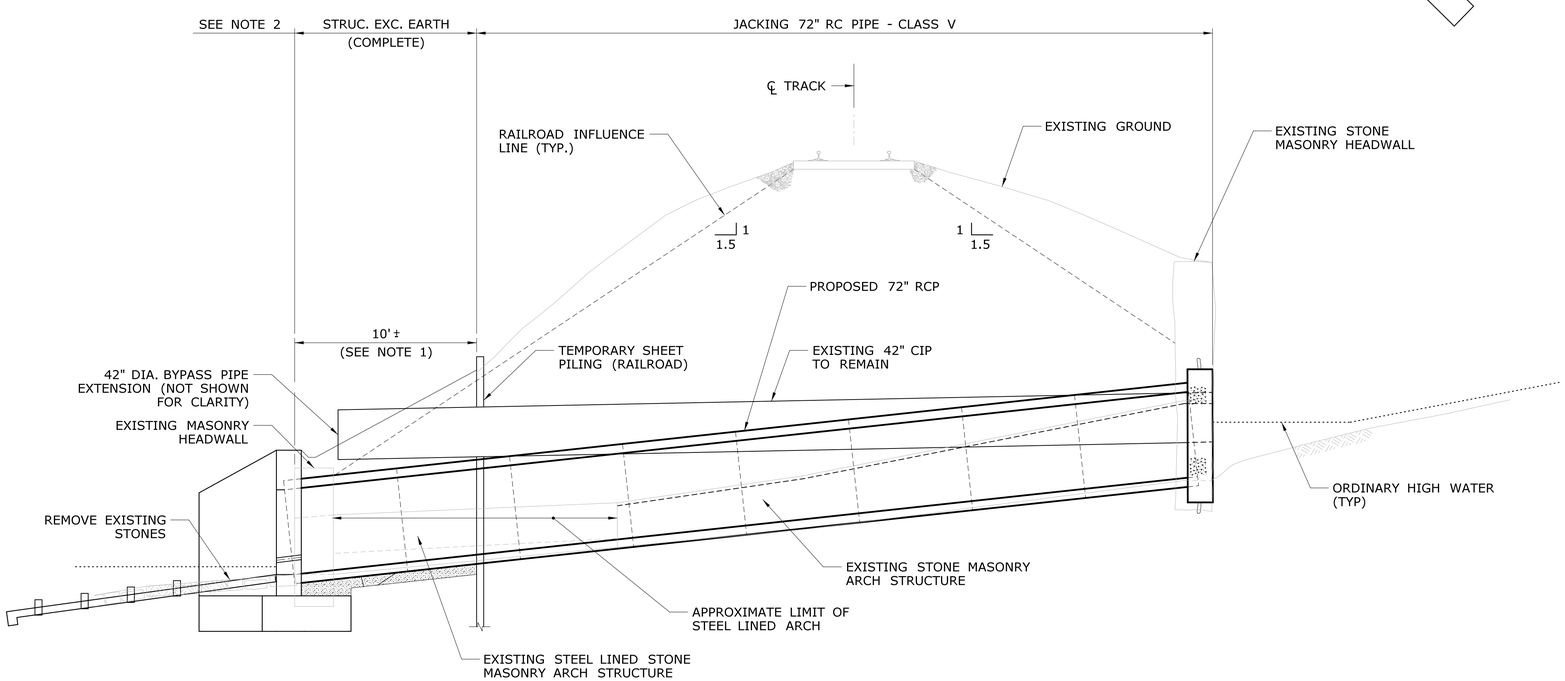

LONGITUDINAL SECTION
(LOOKING NORTH)
SCALE $^{3}/_{16}$"=1'-0"

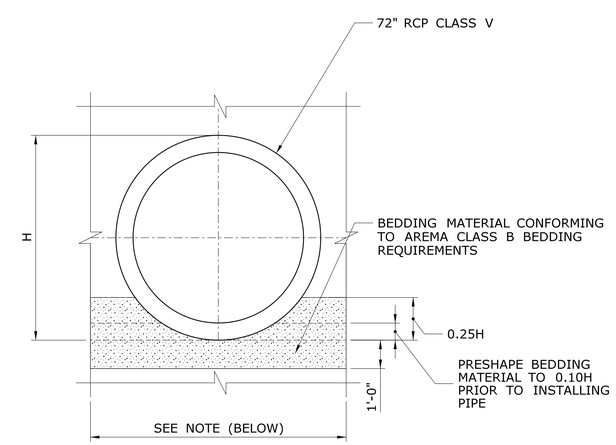

PIPE INSTALLATION DETAIL
SCALE $^{3}/_{8}$"=1'-0"

NOTE: MINIMUM WIDTH TO BE THE LARGER OF 1.5H OR H + 2'-0".

REV.	DATE	REVISION DESCRIPTION	SHEET NO.
-	-	-	-
-	-	-	-
-	-	-	-
-	-	-	-
-	-	-	-
-	-	-	-

THE INFORMATION, INCLUDING ESTIMATED QUANTITIES OF WORK, SHOWN ON THESE SHEETS IS BASED ON LIMITED INVESTIGATIONS BY THE STATE AND IS IN NO WAY WARRANTED TO INDICATE THE CONDITIONS OF ACTUAL QUANTITIES OF WORK WHICH WILL BE REQUIRED.

PLOTTED: 7/25/2018

DESIGNER/DRAFTER: BC/CR
CHECKED BY: RB
SCALE AS NOTED

STATE OF CONNECTICUT
DEPARTMENT OF TRANSPORTATION

FILENAME: ...\SB_MSH_170_3192_MP_15.00_S-008.DGN

LOCHNER
H.W. LOCHNER, INC
55 Hartland St
East Hartford, CT 06108

APPROVED BY: R. BRAY
DATE: 12/06/17

STATE OF CONNECTICUT
RICHARD A. BRAY
LICENSED PROFESSIONAL ENGINEER

PROJECT TITLE:
BRIDGE NO. 09200R HOUSATONIC RAILROAD MP 15.00 OVER UNNAMED BROOK

TOWN: **NEW MILFORD**

DRAWING TITLE: **LAYOUT PLAN AND SECTION**

PROJECT NO. **170-3192**
DRAWING NO. **S1-8**
SHEET NO. **03.01.09**

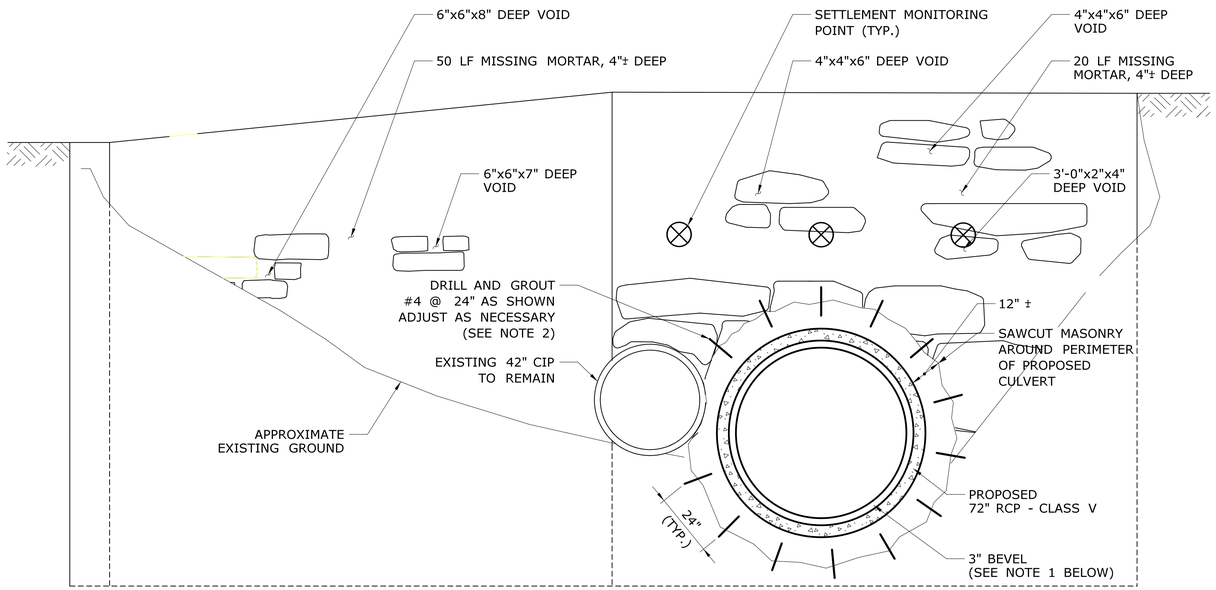

NOTE

1. ADJUST BAR SPACING TO AVOID CONTACT WITH EXISTING 42" CIP.

INLET DEVELOPED ELEVATION

SCALE: $^{3}/_{8}$" = 1'-0"

REPAIR NOTES:

1. THE DETERIORATION SHOWN AND THE RECOMMENDED METHODS OF REPAIR ARE INTENDED TO BE USED AS A GUIDE AND DOES NOT NECESSARILY REFLECT THE CURRENT CONDITION OF THE STRUCTURE. THE ENGINEER SHALL PERFORM AN INSPECTION TO DETERMINE THE LOCATIONS AND EXACT LIMITS OF ALL AREAS TO BE REPAIRED.
2. THE CONTRACTOR SHALL NOT PERFORM ANY WORK WITHOUT THE APPROVAL OF THE ENGINEER.

REPOINT MORTAR JOINTS NOTES:

1. THE REPOINT MORTAR JOINTS DETAIL SHALL BE APPLICABLE FOR BOTH REPOINTING OF JOINTS AND REPAIR OF CRACKS GREATER THAN $^{3}/_{16}$" OPENING.
2. SUBSTRATE MUST BE CLEAN, SOUND, AND FREE OF ALL LOOSE AND DETERIORATED CONCRETE.
3. MORTAR MUST BE HAND SCRUBBED INTO SUBSTRATE FILLING ALL PORES AND VOIDS. WHILE SUB COAT IS STILL PLASTIC, FORCE MATERIAL AGAINST EDGE OF REPAIR, WORKING TOWARD CENTER. ALLOW MORTAR TO SET THEN FINISH WITH STEEL TROWEL.
4. AREAS WHERE DEPTH OF REPAIR IS GREATER THAN 3" IN DEPTH VERTICAL OR $1^{1}/_{2}$" IN DEPTH OVERHEAD SHALL BE MADE IN LIFTS. THE TOP SURFACE OF EACH LIFT SHALL BE SCORED SO AS TO PRODUCE A ROUGHENED SURFACE FOR THE NEXT LIFT. THE PRECEDING LIFT SHALL BE ALLOWED TO REACH FINAL SET BEFORE APPLYING FRESH MATERIAL. THE FRESH MORTAR MUST BE SCRUBBED INTO THE PRECEDING LIFT.
5. REPAIRS PERFORMED ON VERTICAL AND OVERHEAD APPLICATIONS SHALL USE MORTAR DESIGNED FOR SUCH APPLICATION. THE CONTRACTOR SHALL SUBMIT ALL PRODUCT DATA PERTAINING TO THE DESIRED MIX IN CONFORMANCE WITH THE ITEM SPECIAL PROVISION.

REPOINTING CRITERIA:

1. LOOSE, SOFT OR UNSOUND MORTAR SHALL BE REMOVED BY MECHANICAL MEANS INCLUDING CHISELING, WIRE BRUSHING, AIR PRESSURE OR OTHER HAND TOOLS. WHERE DEPTH OF UNSOUND MORTAR EXCEEDS 2", JOINT SHALL BE REPOINTED AS SHOWN IN THE DETAIL.
2. WHERE DEPTH OF UNSOUND MORTAR EXCEEDS 12" AND CAVITIES EXIST IN JOINTS, GROUT INJECTION TUBES SHALL BE INSTALLED AND THE FIRST 3" OF THE JOINT SHALL BE REPOINTED. AFTER THE GROUT HAS SET THE CAVITY SHALL BE FILLED BY INJECTING GROUT.

REPAIR OF MASONRY VOIDS NOTES:

1. FOR INJECTING GROUT THROUGH GROUT TUBES, UTILIZE ONLY SUFFICIENT PRESSURE TO FORCE MORTAR TO FLOW SLOWLY THROUGH GROUT TUBE TO FILL THE MASONRY CAVITIES. MAINTAIN PRESSURE LEVELS IN ACCORDANCE WITH MANUFACTURER'S RECOMMENDATIONS.
2. CERTAIN AREAS MAY REQUIRE THE INSTALLATION OF SHORING AND FORMS TO ENSURE RETENTION OF THE MORTAR WITHIN THE VOIDS UNTIL THE MORTAR HAS SET.
3. BEGIN INJECTION OF GROUT IN LOWER-MOST GROUT TUBE FURTHEST TO ONE SIDE OF VOID UNTIL THERE IS THE APPEARANCE OF GROUT AT THE NEXT GROUT TUBE ADJACENT OR ABOVE THE GROUT TUBE BEING PUMPED, THUS INDICATING GROUT TRAVEL. WHEN GROUT TRAVEL IS INDICATED, DISCONTINUE INJECTION/PUMPING ON GROUT TUBE BEING PUMPED AND TRANSFER GROUT PUMPING TO NEXT ADJACENT GROUT TUBE. CONTINUE GROUTING PROCESS UNTIL VOID IS COMPLETELY FILLED AND GROUT EXITS FROM ALL THE UPPERMOST GROUT/VENT TUBES.
4. IF ANY VOIDS ARE FOUND TO BE EXCESSIVE IN SIZE, ALTERNATE METHODS OF GROUTING MAY BE USED TO FILL THE VOIDS.
5. GROUT TUBES USED FOR PUMPING AND VENTING SHALL BE CUT FLUSH AND SEALED NEAT WITH THE FINISHED SURFACE AFTER THE COMPLETION OF GROUTING.
6. DRILL AND GROUT ANCHOR HOOK REINFORCEMENT PER MANUFACTURER'S RECOMMENDATIONS.
7. THE COST OF DRILLING AND GROUTING OF REINFORCEMENT FOR REPAIR OF MASONRY VOIDS IS TO BE INCLUDED IN THE COST OF THE ITEM "REBUILD MASONRY WALL".
8. THE COST OF HOOK ANCHORS, WELDED STEEL WIRE FABRIC, GROUT, SHORING AND FORM WORK FOR REPAIR OF MASONRY VOIDS SHALL BE INCLUDED IN THE COST OF THE ITEM "REBUILD MASONRY WALL".
9. REPAIR OF MASONRY VOIDS SHALL BE DONE USING EITHER OF THE METHODS SHOWN IN THE DETAIL BELOW.

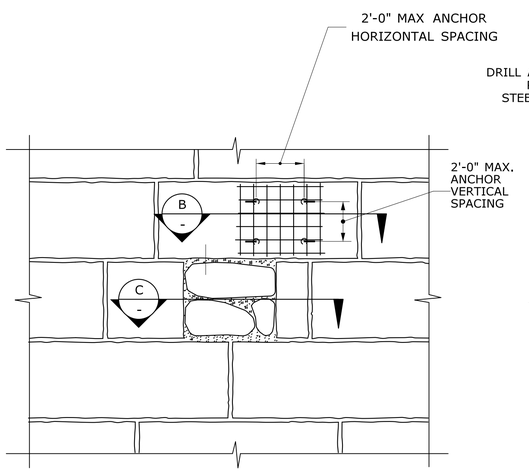

REPAIR OF MASONRY CAVITIES

N.T.S.

NOTE

1. THE CONTRACTOR MAY CHOOSE TO REPAIR MASONRY CAVITIES EITHER BY DRILLING AND GROUTING REINFORCMENT TO SUPPORT WELDED WIRE FABRIC OR BY PLACING NATURAL STONES AND FILLING WITH GROUT. THE COST OF THE REPAIRS SHALL BE PAID UNDER THE ITEM "REBUILD MASONRY WALL".

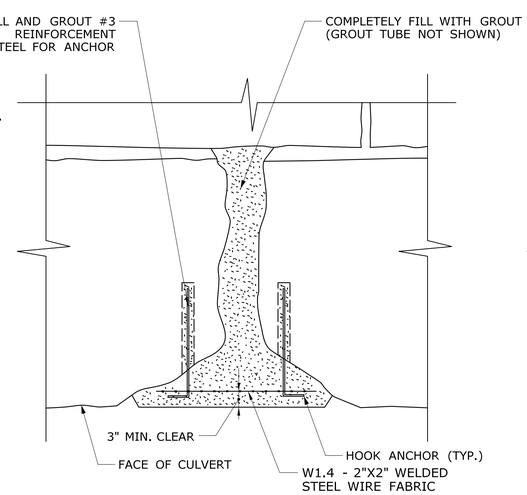

SECTION B

N.T.S.

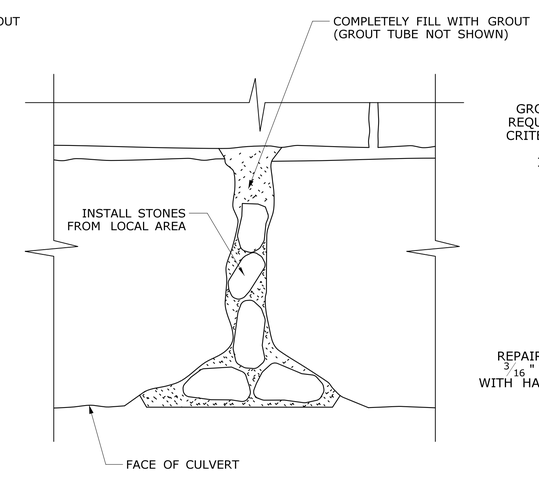

SECTION C

N.T.S.

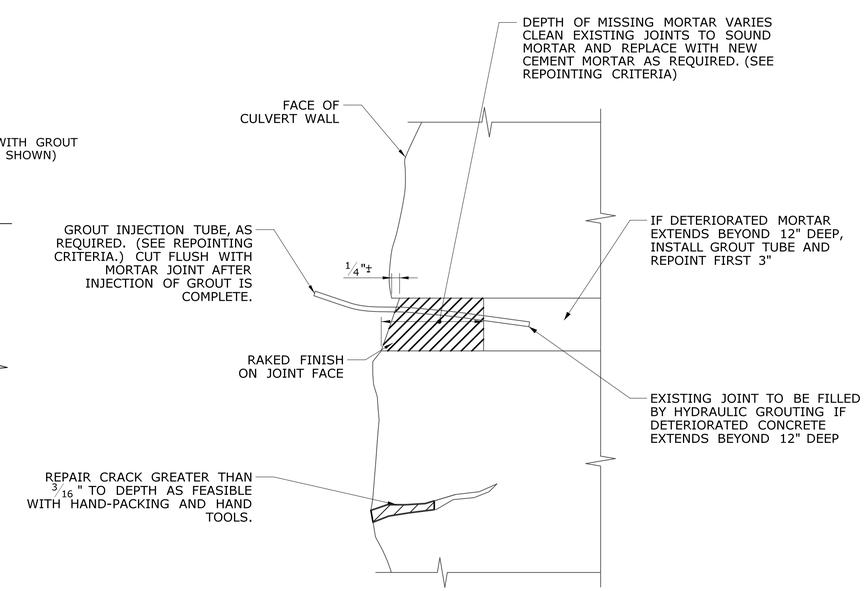

REPOINT MORTAR JOINTS

N.T.S.

REV.	DATE	REVISION DESCRIPTION	SHEET NO.
-	-	-	-
-	-	-	-
-	-	-	-
-	-	-	-
-	-	-	-
-	-	-	-

THE INFORMATION, INCLUDING ESTIMATED QUANTITIES OF WORK, SHOWN ON THESE SHEETS IS BASED ON LIMITED INVESTIGATIONS BY THE STATE AND IS IN NO WAY WARRANTED TO INDICATE THE CONDITIONS OF ACTUAL QUANTITIES OF WORK WHICH WILL BE REQUIRED.

PLOTTED: 7/25/2018

DESIGNER/DRAFTER: BC/CR
CHECKED BY: RB
SCALE AS NOTED

STATE OF CONNECTICUT
DEPARTMENT OF TRANSPORTATION

FILENAME: ...\SB_MSH_170_3192_MP_15.00_S-009.DGN

LOCHNER
H.W. LOCHNER, INC
55 Hartland St
East Hartford, CT 06108

APPROVED BY: R. BRAY
DATE: 12/06/17

STATE OF CONNECTICUT RICHARD A. BRAY LICENSED PROFESSIONAL ENGINEER

PROJECT TITLE:
BRIDGE NO. 09200R HOUSATONIC RAILROAD MP 15.00 OVER UNNAMED BROOK

TOWN: **NEW MILFORD**

DRAWING TITLE:
INLET HEADWALL REPAIR DETAILS - 1

PROJECT NO. **170-3192**
DRAWING NO. **S1-9**
SHEET NO. **03.01.10**

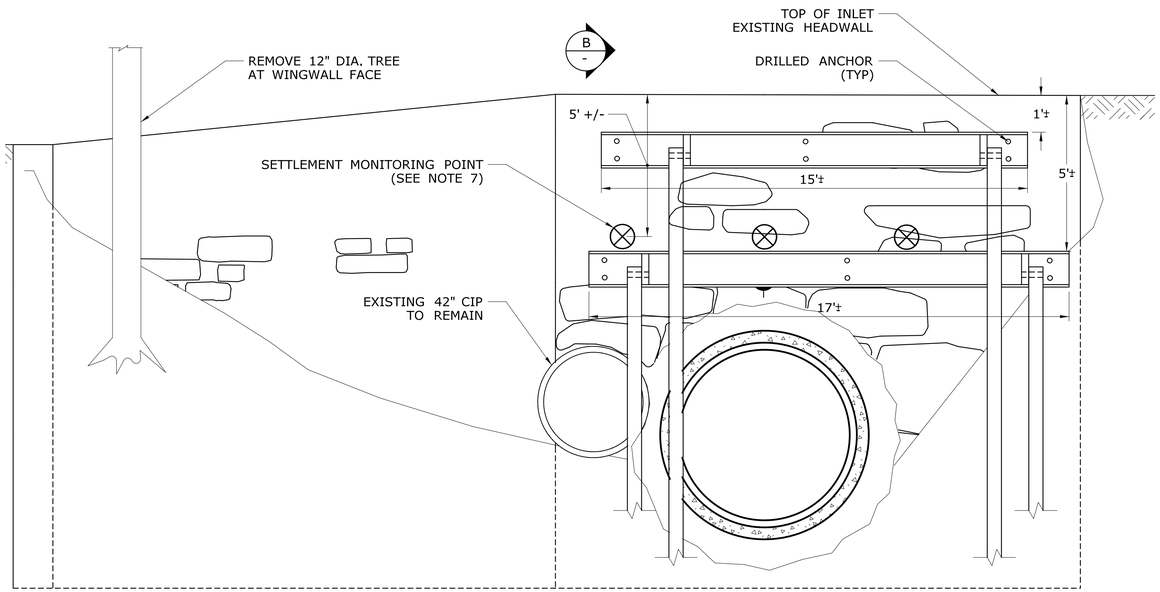

SUPPORT DETAILS (A / S1-6)

SCALE: 3/8" = 1'

NOTES

1. FILL ANCHOR HOLES WITH GROUT FOLLOWING REMOVAL OF BRACES. FILLED HOLE SURFACE SHALL CLOSELY MATCH EXISTING WALL SURFACE. GROUT COLOR SHALL BE SIMILAR TO THAT OF THE EXISTING STONE MASONRY.
2. PLACE SHIMS TO ENSURE UNIFORM BEARING ON WALL SURFACE IRREGULARITIES.
3. THE BRACING SYSTEM SHOWN HERE IS A SUGGESTED METHOD INTENDED TO ILLUSTRATE PROJECT REQUIREMENTS. THE CONTRACTOR SHALL DESIGN A BRACING SYSTEM TO SUPPORT THE HEADWALL DURING PIPE JACKING AND PREVENT ANY SHIFTING OF STONES.
4. ALL VOIDS CREATED OR ENCOUNTERED DURING PIPE JACKING SHALL BE FILLED WITH NON-SHRINK GROUT. NO VOIDS SHALL BE PRESENT IN THE FINAL CONDITION. THE COST TO PLACE THE GROUT SHALL BE INCLUDED AS PART OF THE CONTRACT PAY ITEM "JACKING 72" RCP CLASS V".
5. CAST BEVEL INLET SECTION. CAST INLET FACE SHALL MATCH INSIDE PIPE FACE. NO RESTRICTION TO FLOW SHALL OCCUR.
6. DRILL AND GROUT REINFORCEMENT AS SHOWN. BAR LENGTH SHALL BE FIELD DETERMINED BY THE CONTRACTOR.
7. SETTLEMENT MONITORING POINTS SHALL BE VISIBLE FOLLOWING INSTALLATION OF THE PROPOSED BRACING SYSTEM.

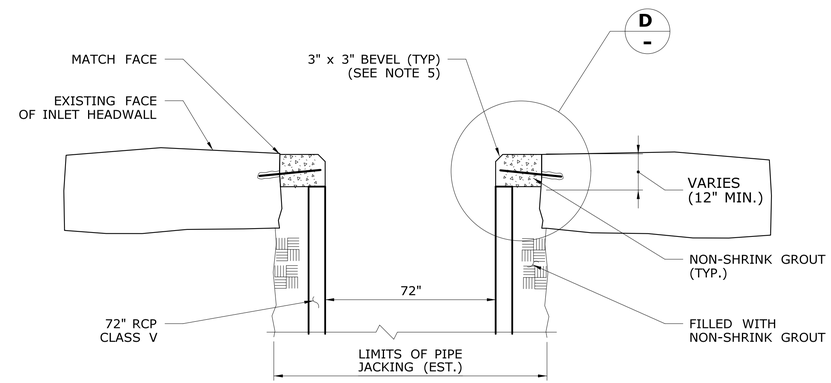

SECTION (C / -)

SCALE: 3/8" = 1'-0'

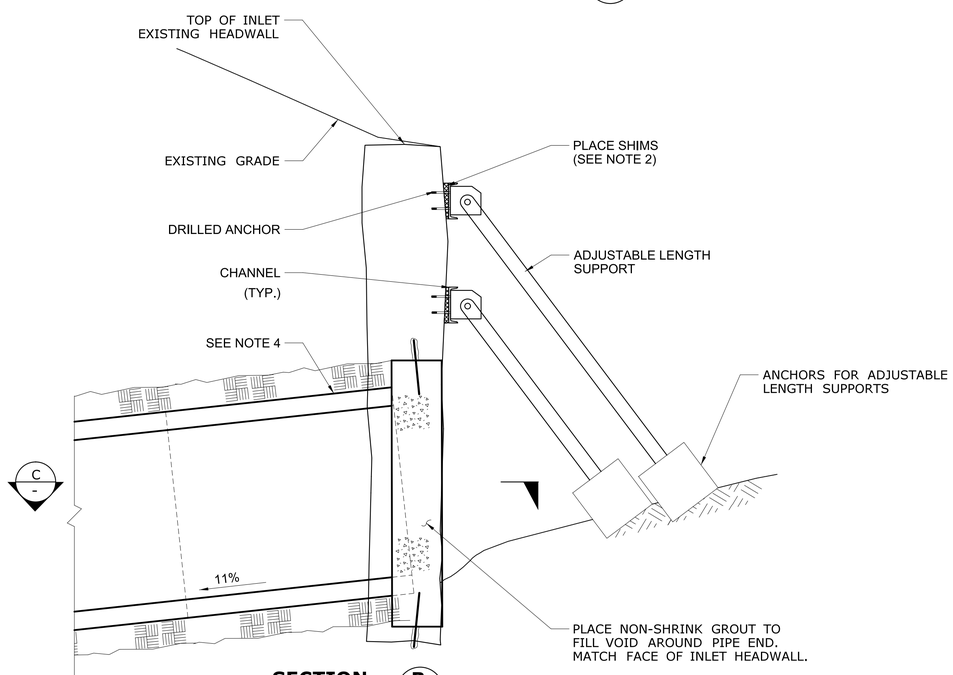

SECTION (B / -)

SCALE: 3/8" = 1'

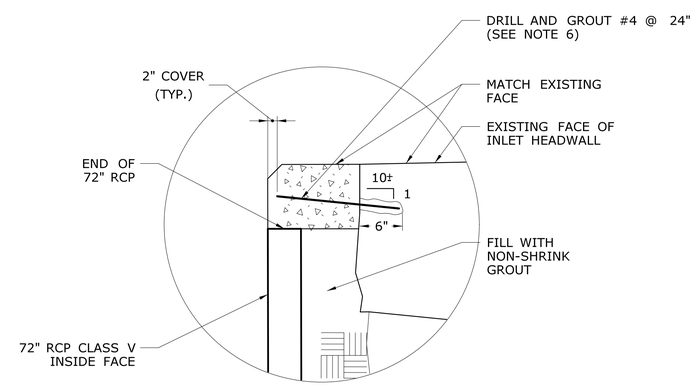

BEVEL DETAIL (D / -)

SCALE: 3/4" = 1'-0'

REV.	DATE	REVISION DESCRIPTION	SHEET NO.
-	-	-	-
-	-	-	-
-	-	-	-
-	-	-	-
-	-	-	-
-	-	-	-

THE INFORMATION, INCLUDING ESTIMATED QUANTITIES OF WORK, SHOWN ON THESE SHEETS IS BASED ON LIMITED INVESTIGATIONS BY THE STATE AND IS IN NO WAY WARRANTED TO INDICATE THE CONDITIONS OF ACTUAL QUANTITIES OF WORK WHICH WILL BE REQUIRED.

PLOTTED: 7/25/2018

DESIGNER/DRAFTER: BC/CR

CHECKED BY: RB

SCALE AS NOTED

STATE OF CONNECTICUT
DEPARTMENT OF TRANSPORTATION

FILENAME: ...\SB_MSH_170_3192_MP_15.00_S-010.DGN

LOCHNER
H.W. LOCHNER, INC
55 Hartland St
East Hartford, CT 06108

APPROVED BY: R. BRAY DATE: 12/06/17

STATE OF CONNECTICUT RICHARD A. BRAY LICENSED PROFESSIONAL ENGINEER

PROJECT TITLE: **BRIDGE NO. 09200R HOUSATONIC RAILROAD MP 15.00 OVER UNNAMED BROOK**

TOWN: **NEW MILFORD**

DRAWING TITLE: **INLET HEADWALL REPAIR DETAILS - 2**

PROJECT NO. **170-3192**

DRAWING NO. **S1-10**

SHEET NO. **03.01.11**

NOTE:

1. BEND THE WELDED WIRE FABRIC IN THE BAFFLE BLOCKS IN THE FIELD TO LAY AGAINST THE WELDED WIRE FABRIC IN THE SPASH PAD.
2. TIE THE TWO SHEETS OF WELDED WIRE FABRIC TOGETHER USING WIRE TIES AT A MINIMUM OF 4 LOCATIONS PER BAFFLE BLOCK.
3. PRECAST CONCRETE BAFFLE BLOCKS PAID UNDER THE ITEM "PRECAST CONCRETE CURBING"

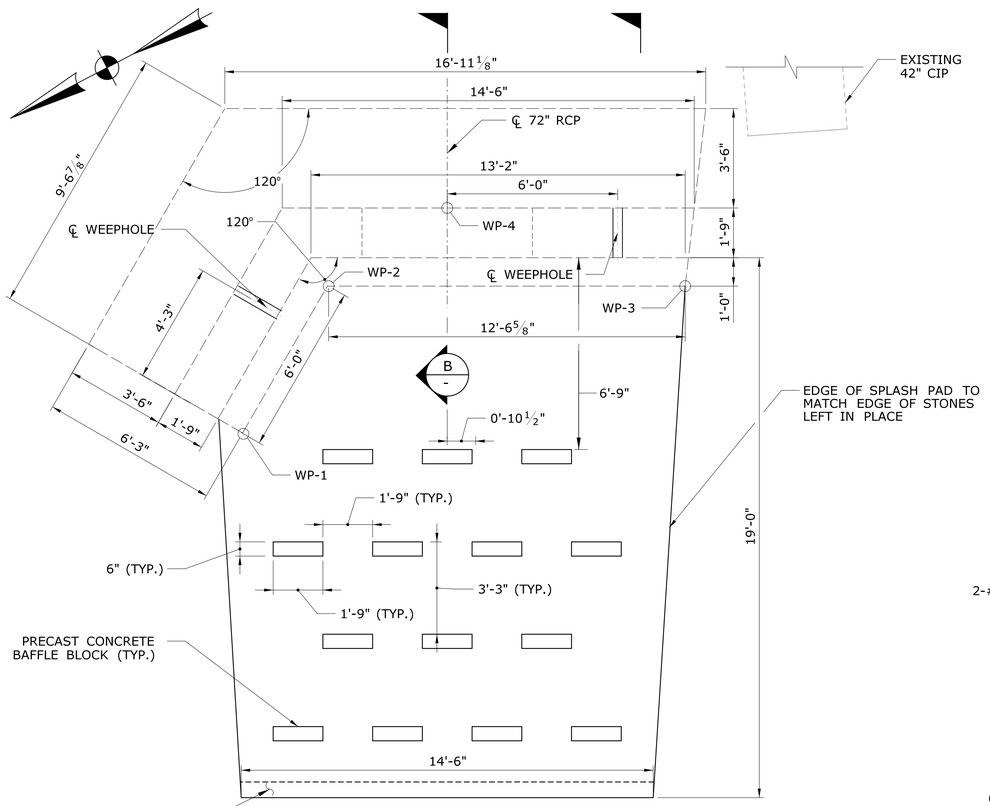

OUTLET PLAN VIEW
SCALE: 3/8" = 1'

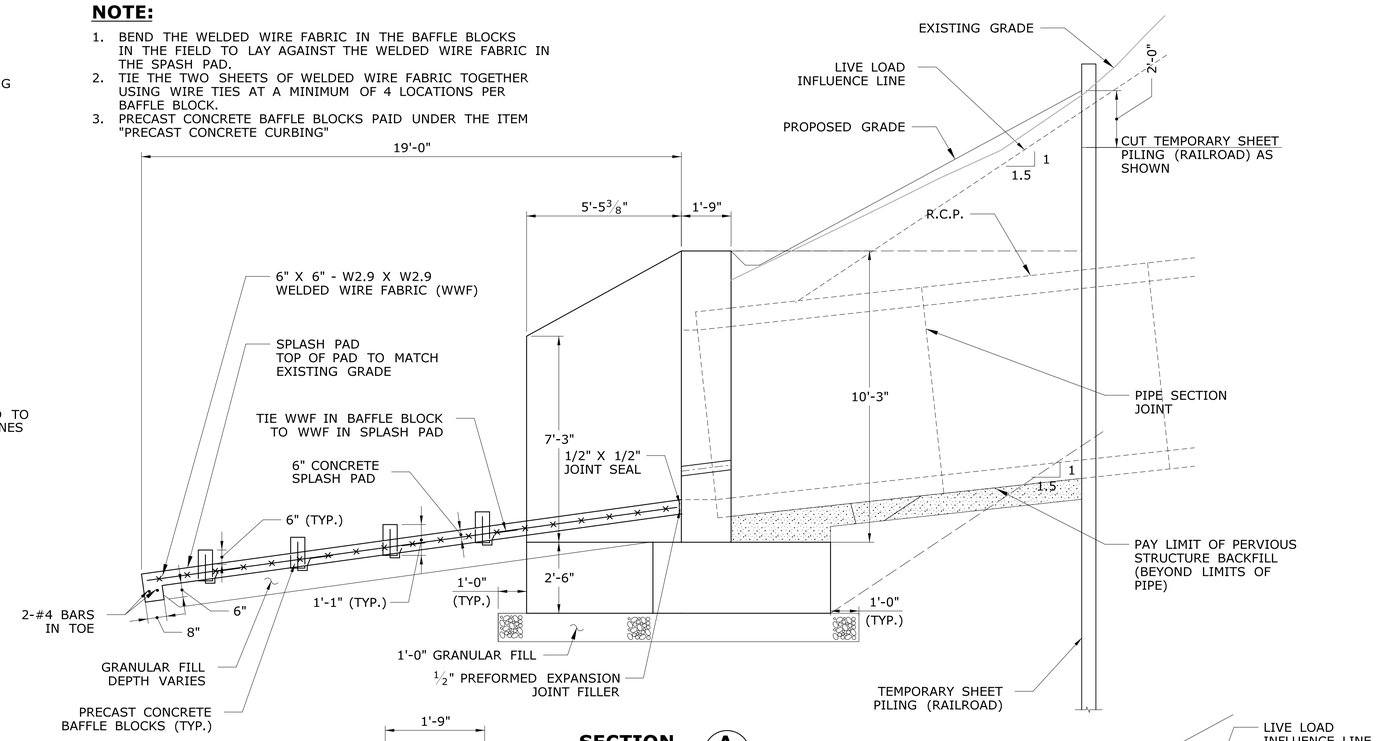

SECTION A
SCALE: 3/8" = 1'

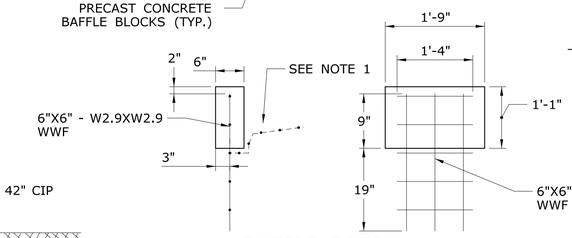

BAFFLE DETAIL
N.T.S.

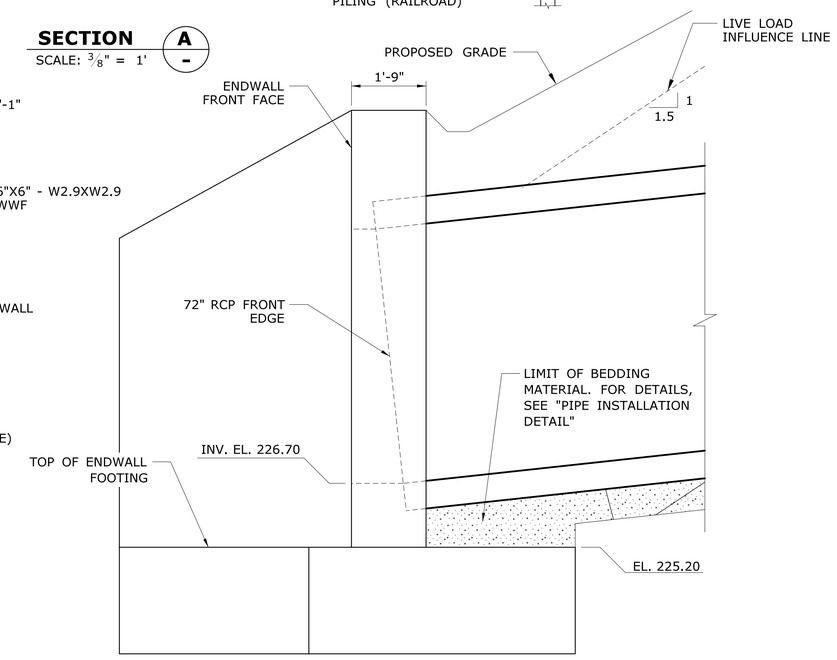

SECTION B
SCALE: 1/2" = 1'

MAXIMUM DESIGN FOUNDATION PRESSURE = 1.0 TSF

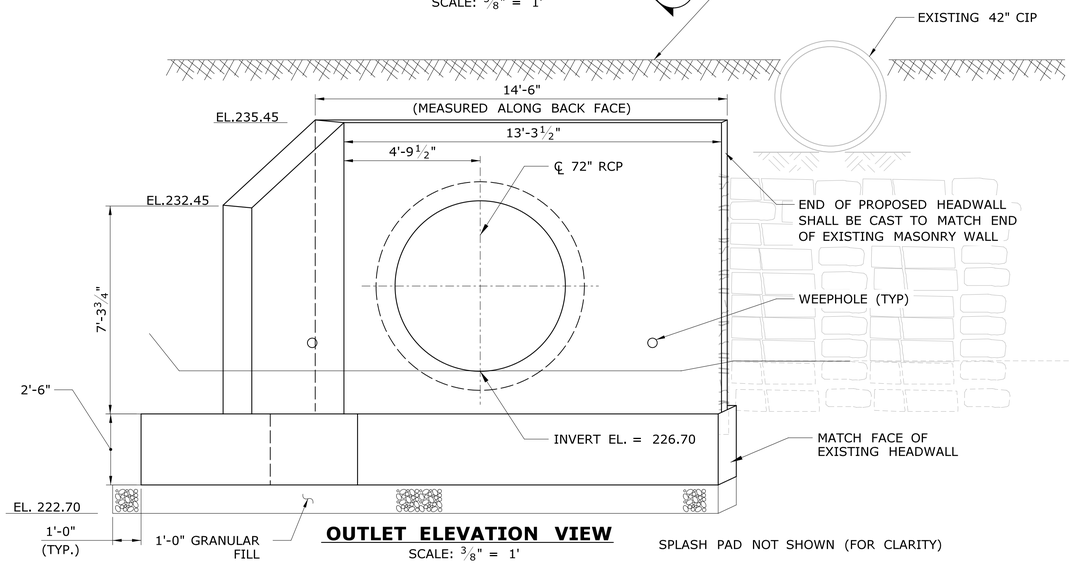

OUTLET ELEVATION VIEW
SCALE: 3/8" = 1'

SPLASH PAD NOT SHOWN (FOR CLARITY)

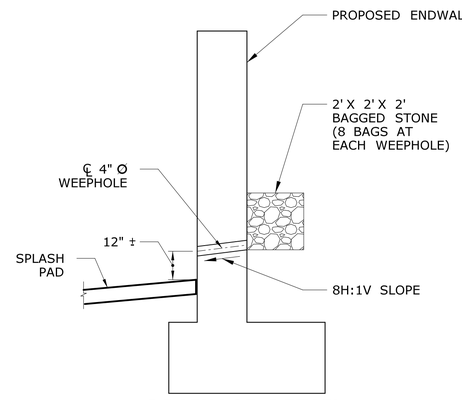

DRAINAGE DETAIL
(WINGWALL DETAIL SIMILAR)
SCALE: 3/8" = 1'

REV.	DATE	REVISION DESCRIPTION	SHEET NO.
-	-	-	-
-	-	-	-
-	-	-	-
-	-	-	-
-	-	-	-
-	-	-	-

THE INFORMATION, INCLUDING ESTIMATED QUANTITIES OF WORK, SHOWN ON THESE SHEETS IS BASED ON LIMITED INVESTIGATIONS BY THE STATE AND IS IN NO WAY WARRANTED TO INDICATE THE CONDITIONS OF ACTUAL QUANTITIES OF WORK WHICH WILL BE REQUIRED.

PLOTTED: 7/25/2018

DESIGNER/DRAFTER: BC/CR
CHECKED BY: RB
SCALE AS NOTED

STATE OF CONNECTICUT
DEPARTMENT OF TRANSPORTATION

FILENAME: ...\SB_MSH_170_3192_MP_15.00_S-011.DGN

LOCHNER
H.W. LOCHNER, INC
55 Hartland St
East Hartford, CT 06108

APPROVED BY: R. BRAY
DATE: 12/06/17

STATE OF CONNECTICUT RICHARD A. BRAY LICENSED PROFESSIONAL ENGINEER

PROJECT TITLE:
BRIDGE NO. 09200R HOUSATONIC RAILROAD MP 15.00 OVER UNNAMED BROOK

TOWN: **NEW MILFORD**

DRAWING TITLE: **HEADWALL AND WINGWALL DETAILS**

PROJECT NO. **170-3192**
DRAWING NO. **S1-11**
SHEET NO. **03.01.12**

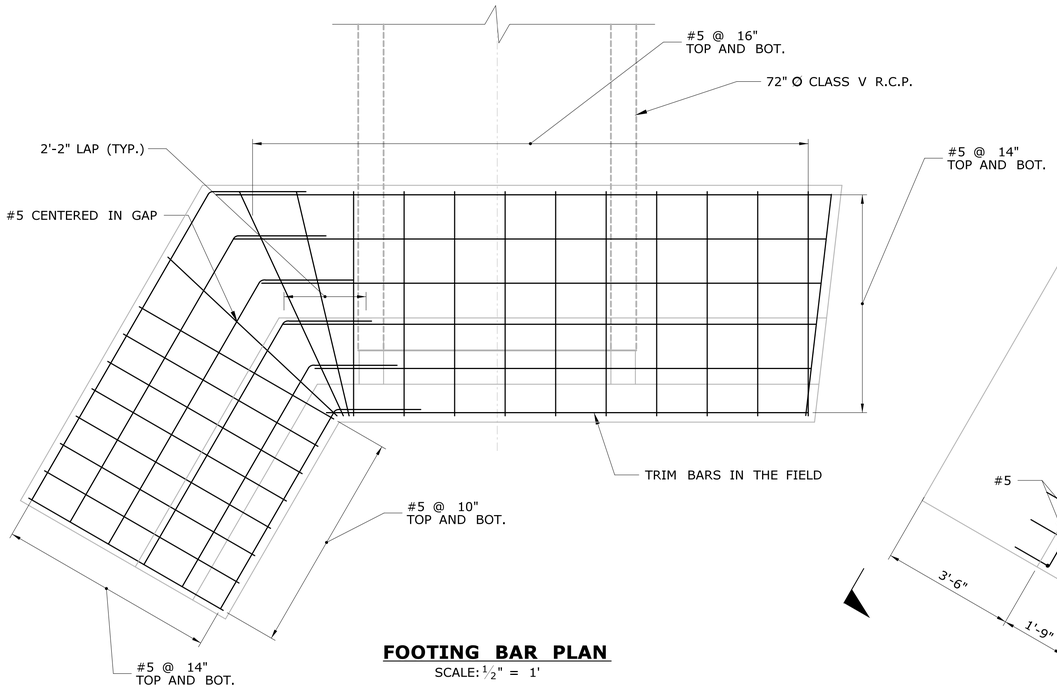

FOOTING BAR PLAN
SCALE: ½" = 1'

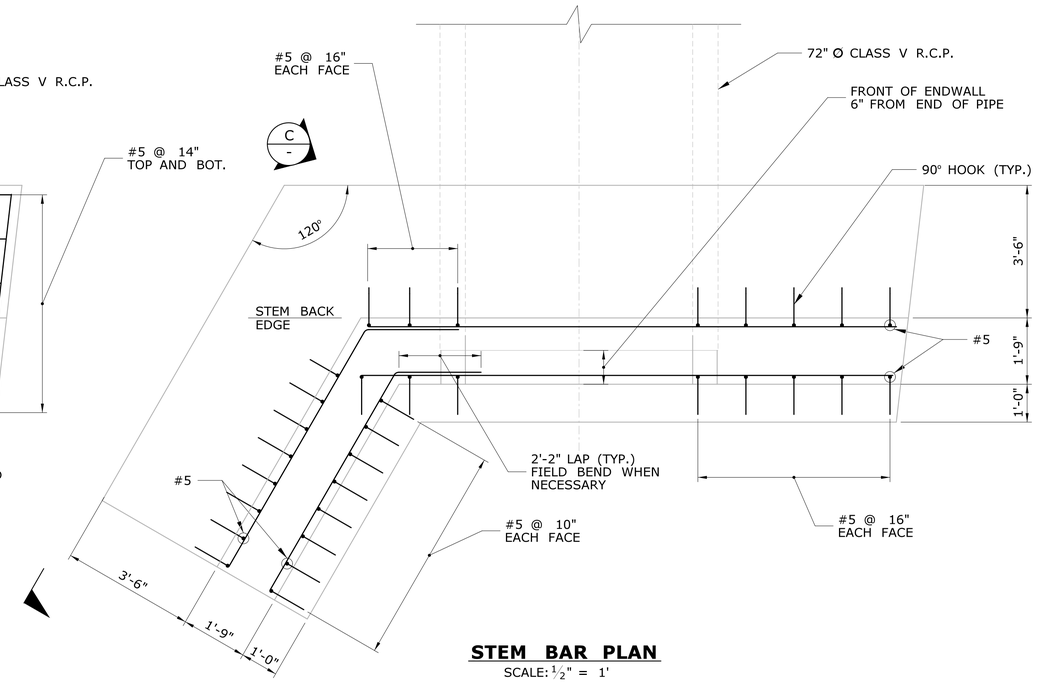

STEM BAR PLAN
SCALE: ½" = 1'

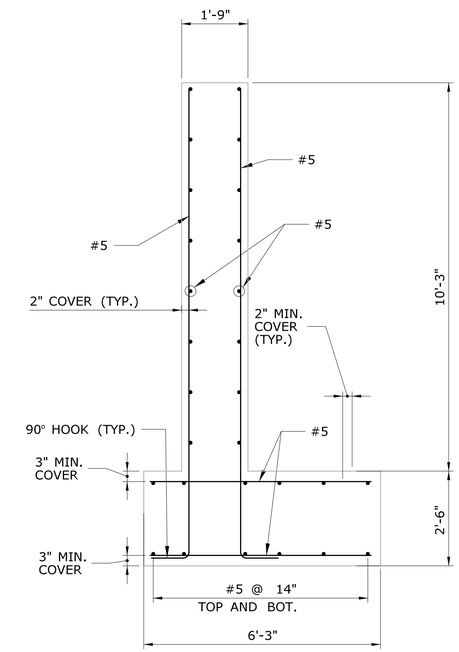

ENDWALL SECTION A
SCALE: ½" = 1'

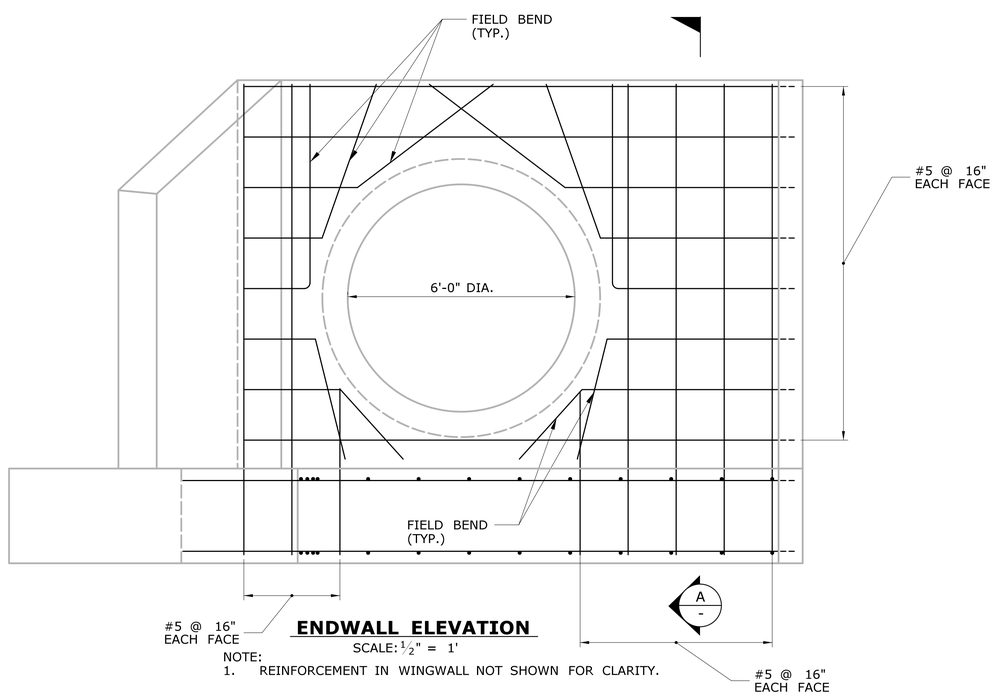

ENDWALL ELEVATION
SCALE: ½" = 1'

NOTE:
1. REINFORCEMENT IN WINGWALL NOT SHOWN FOR CLARITY.

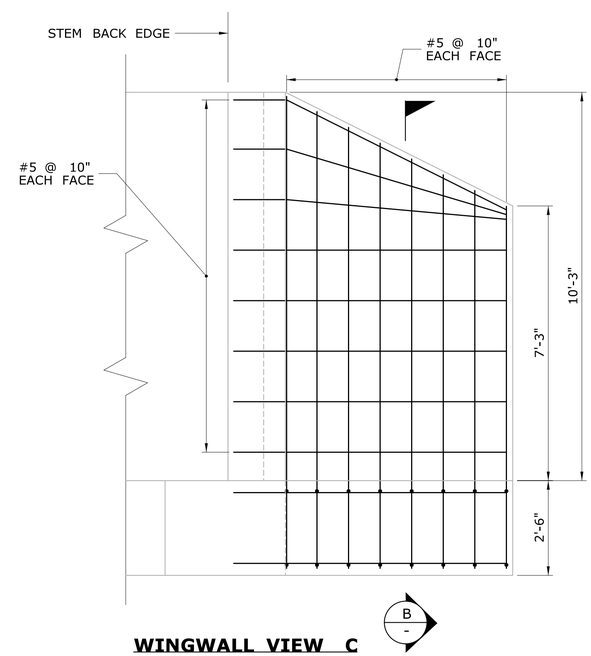

WINGWALL VIEW C
SCALE: ½" = 1'

NOTE:
1. REINFORCEMENT IN ENDWALL NOT SHOWN FOR CLARITY.

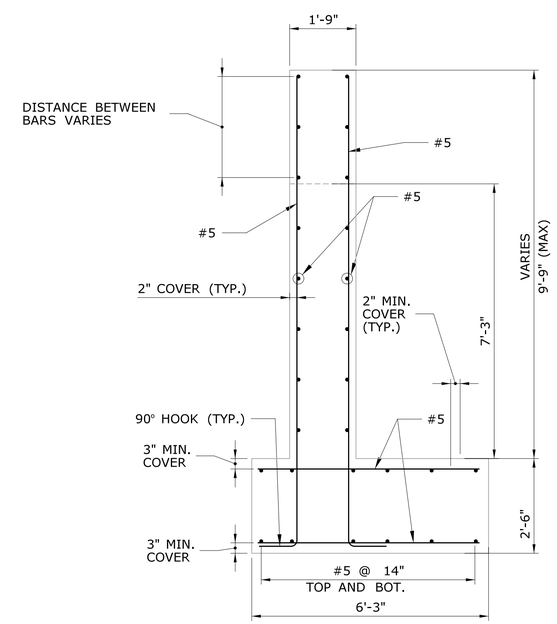

WINGWALL SECTION B
SCALE: ½" = 1'

REV.	DATE	REVISION DESCRIPTION	SHEET NO.
-	-	-	-
-	-	-	-
-	-	-	-
-	-	-	-
-	-	-	-
-	-	-	-

THE INFORMATION, INCLUDING ESTIMATED QUANTITIES OF WORK, SHOWN ON THESE SHEETS IS BASED ON LIMITED INVESTIGATIONS BY THE STATE AND IS IN NO WAY WARRANTED TO INDICATE THE CONDITIONS OF ACTUAL QUANTITIES OF WORK WHICH WILL BE REQUIRED.

PLOTTED: 7/25/2018

DESIGNER/DRAFTER: BC/CR
CHECKED BY: RB
SCALE AS NOTED

STATE OF CONNECTICUT
DEPARTMENT OF TRANSPORTATION

FILENAME: ...\SB_MSH_170_3192_MP_15.00_S-012.DGN

LOCHNER
H.W. LOCHNER, INC
55 Hartland St
East Hartford, CT 06108

APPROVED BY: R. BRAY
DATE: 12/06/17

STATE OF CONNECTICUT
RICHARD A. BRAY
LICENSED
PROFESSIONAL ENGINEER

PROJECT TITLE:
BRIDGE NO. 09200R HOUSATONIC RAILROAD MP 15.00 OVER UNNAMED BROOK

TOWN: **NEW MILFORD**

DRAWING TITLE: **ENDWALL DETAILS**

PROJECT NO. **170-3192**
DRAWING NO. **S1-12**
SHEET NO. **03.01.13**