03.02 - BRIDGE NO. 09204R
INDEX OF DRAWINGS

DRAWING NUMBER	DRAWING TITLE	DRAWING NUMBER	
S2-0	INDEX OF DRAWINGS		
S2-1	SITE PLAN		
S2-2	GENERAL PLAN AND ELEVATION		
S2-3	PROFILE AND TYPICAL SECTIONS		
S2-4	BORING LOGS - 1		
S2-5	BORING LOGS - 2		
S2-6	CONSTRUCTION ACCESS		
S2-7	STAGE CONSTRUCTION		
S2-8	CULVERT PLAN AND ELEVATION		
S2-9	CULVERT DETAILS		
S2-10	WINGWALL ELEVATIONS		
S2-11	WINGWALL DETAILS		
S2-12	MISCELLANEOUS DETAILS		

DESIGNED BY:

LOCHNER
H.W. LOCHNER, INC
55 Hartland Street, Suite 401
East Hartford, CT 06108

STATE OF CONNECTICUT · RICHARD A. BRAY · LICENSED PROFESSIONAL ENGINEER

Richard Arthur Bray
2018.07.25
17:04:11 -04'00'

VOLUME 3 SUBSETS

SUBSET NO.	SUBSET TITLE	SUBSET SHEET COUNT
01	BRIDGE NO. 09200R	13
02	BRIDGE NO. 09204R	13
03	BRIDGE NO. 09206R	13
04	BRIDGE NO. 09223R	21

REV.	DATE	REVISION DESCRIPTION	SHEET NO.
-	-	-	-
-	-	-	-
-	-	-	-
-	-	-	-
-	-	-	-
-	-	-	-

THE INFORMATION, INCLUDING ESTIMATED QUANTITIES OF WORK, SHOWN ON THESE SHEETS IS BASED ON LIMITED INVESTIGATIONS BY THE STATE AND IS IN NO WAY WARRANTED TO INDICATE THE CONDITIONS OF ACTUAL QUANTITIES OF WORK WHICH WILL BE REQUIRED.

PLOTTED: 7/25/2018

DESIGNER/DRAFTER: BC/CR
CHECKED BY: RB

STATE OF CONNECTICUT
DEPARTMENT OF TRANSPORTATION

FILENAME: ...\SB_MSH_170_3192_MP_21.62_INDEX.dgn

LOCHNER
H.W. LOCHNER, INC
55 Hartland St
East Hartford, CT 06108

APPROVED BY: R. BRAY DATE: 12/06/17

STATE OF CONNECTICUT · RICHARD A. BRAY · LICENSED PROFESSIONAL ENGINEER

PROJECT TITLE:
BRIDGE NO. 09204R HOUSATONIC RAILROAD MP 21.62 OVER WOMENSHENUK BROOK

TOWN: **KENT**

DRAWING TITLE: **INDEX OF DRAWINGS**

PROJECT NO. **170-3192**
DRAWING NO. **S2-0**
SHEET NO. **03.02.01**

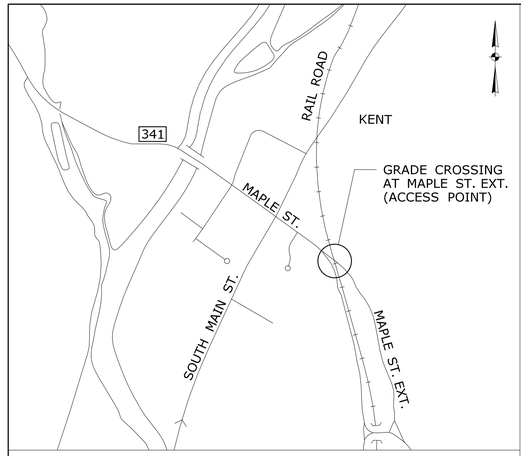

ALTERNATE TRACK ACCESS - SITE NO.2
NTS

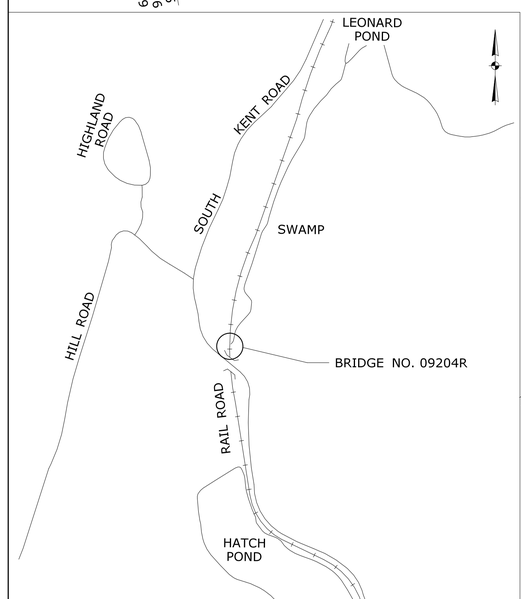

LOCATION PLAN - SITE NO.2
NTS

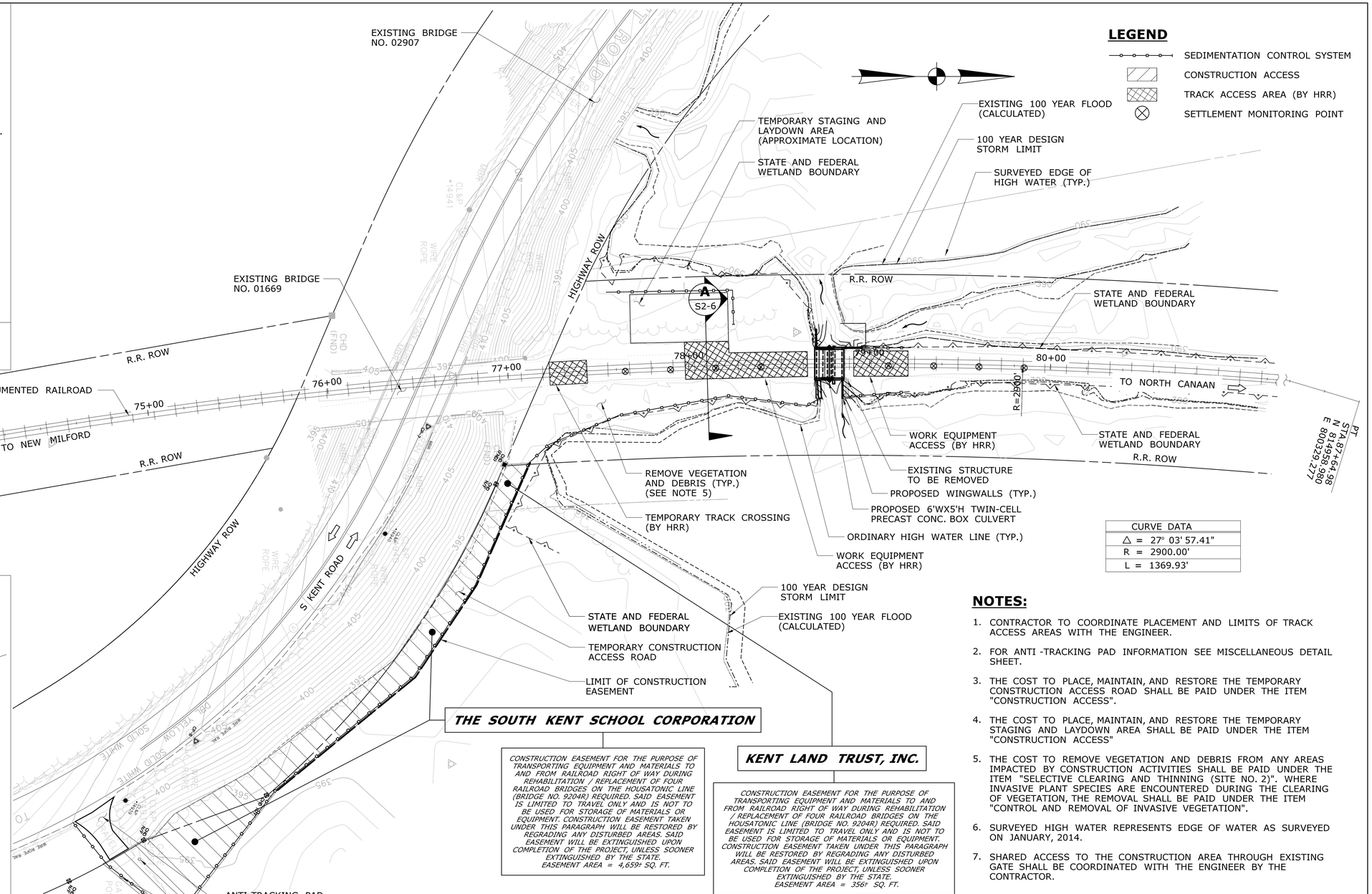

PLAN
SCALE: 1" = 30'

LEGEND

- SEDIMENTATION CONTROL SYSTEM
- CONSTRUCTION ACCESS
- TRACK ACCESS AREA (BY HRR)
- SETTLEMENT MONITORING POINT

CURVE DATA
Δ = 27° 03' 57.41"
R = 2900.00'
L = 1369.93'

NOTES:

1. CONTRACTOR TO COORDINATE PLACEMENT AND LIMITS OF TRACK ACCESS AREAS WITH THE ENGINEER.
2. FOR ANTI -TRACKING PAD INFORMATION SEE MISCELLANEOUS DETAIL SHEET.
3. THE COST TO PLACE, MAINTAIN, AND RESTORE THE TEMPORARY CONSTRUCTION ACCESS ROAD SHALL BE PAID UNDER THE ITEM "CONSTRUCTION ACCESS".
4. THE COST TO PLACE, MAINTAIN, AND RESTORE THE TEMPORARY STAGING AND LAYDOWN AREA SHALL BE PAID UNDER THE ITEM "CONSTRUCTION ACCESS"
5. THE COST TO REMOVE VEGETATION AND DEBRIS FROM ANY AREAS IMPACTED BY CONSTRUCTION ACTIVITIES SHALL BE PAID UNDER THE ITEM "SELECTIVE CLEARING AND THINNING (SITE NO. 2)". WHERE INVASIVE PLANT SPECIES ARE ENCOUNTERED DURING THE CLEARING OF VEGETATION, THE REMOVAL SHALL BE PAID UNDER THE ITEM "CONTROL AND REMOVAL OF INVASIVE VEGETATION".
6. SURVEYED HIGH WATER REPRESENTS EDGE OF WATER AS SURVEYED ON JANUARY, 2014.
7. SHARED ACCESS TO THE CONSTRUCTION AREA THROUGH EXISTING GATE SHALL BE COORDINATED WITH THE ENGINEER BY THE CONTRACTOR.

THE SOUTH KENT SCHOOL CORPORATION

CONSTRUCTION EASEMENT FOR THE PURPOSE OF TRANSPORTING EQUIPMENT AND MATERIALS TO AND FROM RAILROAD RIGHT OF WAY DURING REHABILITATION / REPLACEMENT OF FOUR RAILROAD BRIDGES ON THE HOUSATONIC LINE (BRIDGE NO. 9204R) REQUIRED. SAID EASEMENT IS LIMITED TO TRAVEL ONLY AND IS NOT TO BE USED FOR STORAGE OF MATERIALS OR EQUIPMENT. CONSTRUCTION EASEMENT TAKEN UNDER THIS PARAGRAPH WILL BE RESTORED BY REGRADING ANY DISTURBED AREAS. SAID EASEMENT WILL BE EXTINGUISHED UPON COMPLETION OF THE PROJECT, UNLESS SOONER EXTINGUISHED BY THE STATE.
EASEMENT AREA = 4,659± SQ. FT.

KENT LAND TRUST, INC.

CONSTRUCTION EASEMENT FOR THE PURPOSE OF TRANSPORTING EQUIPMENT AND MATERIALS TO AND FROM RAILROAD RIGHT OF WAY DURING REHABILITATION / REPLACEMENT OF FOUR RAILROAD BRIDGES ON THE HOUSATONIC LINE (BRIDGE NO. 9204R) REQUIRED. SAID EASEMENT IS LIMITED TO TRAVEL ONLY AND IS NOT TO BE USED FOR STORAGE OF MATERIALS OR EQUIPMENT. CONSTRUCTION EASEMENT TAKEN UNDER THIS PARAGRAPH WILL BE RESTORED BY REGRADING ANY DISTURBED AREAS. SAID EASEMENT WILL BE EXTINGUISHED UPON COMPLETION OF THE PROJECT, UNLESS SOONER EXTINGUISHED BY THE STATE.
EASEMENT AREA = 356± SQ. FT.

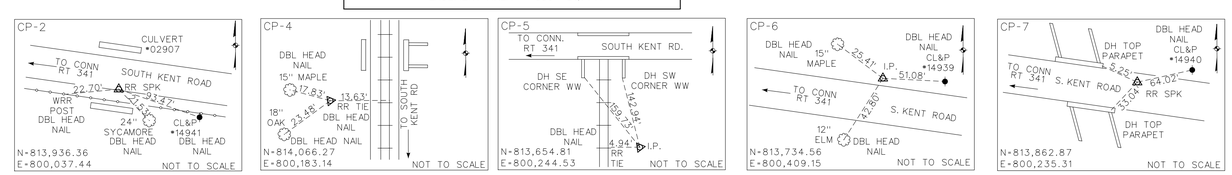

SURVEY TIES
NTS

REV.	DATE	REVISION DESCRIPTION	SHEET NO.
-	-	-	-
-	-	-	-
-	-	-	-
-	-	-	-
-	-	-	-
-	-	-	-

THE INFORMATION, INCLUDING ESTIMATED QUANTITIES OF WORK, SHOWN ON THESE SHEETS IS BASED ON LIMITED INVESTIGATIONS BY THE STATE AND IS IN NO WAY WARRANTED TO INDICATE THE CONDITIONS OF ACTUAL QUANTITIES OF WORK WHICH WILL BE REQUIRED.

PLOTTED: 7/25/2018

DESIGNER/DRAFTER: BC/CR
CHECKED BY: RB
SCALE AS NOTED

STATE OF CONNECTICUT
DEPARTMENT OF TRANSPORTATION

FILENAME: ...\SB_MSH_170_3192_MP_21.62_S-001.DGN

LOCHNER
H.W. LOCHNER, INC
55 Hartland St
East Hartford, CT 06108

APPROVED BY: R. BRAY
DATE: 12/06/17

STATE OF CONNECTICUT
RICHARD A. BRAY
LICENSED PROFESSIONAL ENGINEER

PROJECT TITLE:
BRIDGE NO. 09204R HOUSATONIC RAILROAD MP 21.62 OVER WOMENSHENUK BROOK

TOWN: **KENT**

DRAWING TITLE: **SITE PLAN**

PROJECT NO. **170-3192**
DRAWING NO. **S2-1**
SHEET NO. **03.02.02**

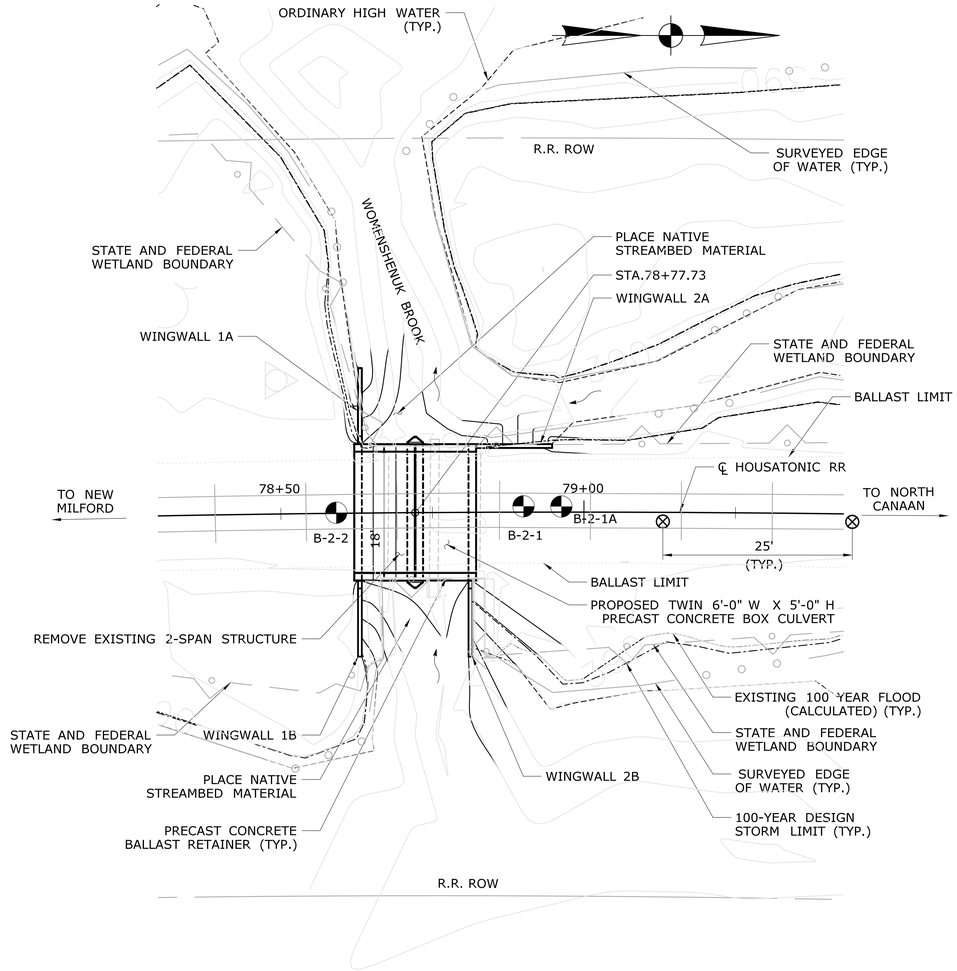

PLAN

SCALE: 1" = 10'-0"

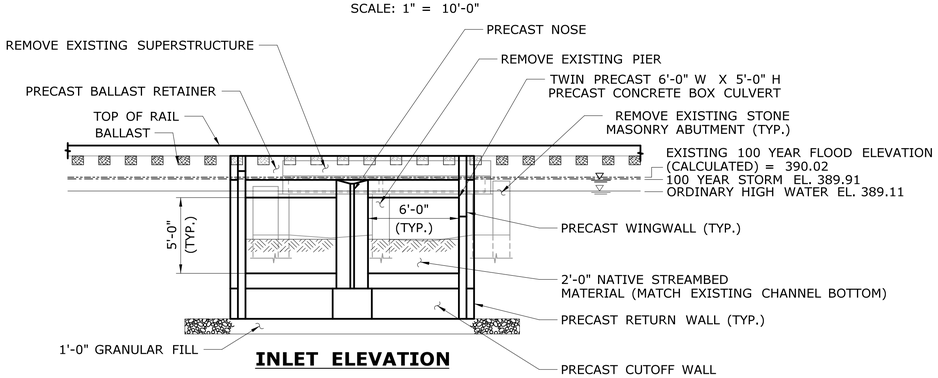

INLET ELEVATION

SCALE: 1" = 5'-0"

GENERAL NOTES

SPECIFICATIONS:
CONNECTICUT DEPARTMENT OF TRANSPORTATION FORM 817, DATED 2016, SUPPLEMENTAL SPECIFICATIONS, DATED JANUARY 2018, AND SPECIAL PROVISIONS.

DESIGN SPECIFICATIONS:
AMERICAN RAILWAY ENGINEERING AND MAINTENANCE-OF-WAY ASSOCIATION (AREMA) MANUAL FOR RAILWAY ENGINEERING (2016).

MAINTENANCE OF RAIL OPERATIONS:
DURING CONSTRUCTION, THE CONTRACTOR SHALL NOT INTERFERE WITH RAIL OPERATIONS EXCEPT AS SPECIFICALLY PERMITTED BY SPECIFICATIONS. SEE SECTION 1.08-PROSECUTION AND PROGRESS.

ALLOWABLE DESIGN STRESSES:
PRECAST CONCRETE — BASED ON f'_c = 5,000 PSI
REINFORCEMENT (ASTM A615 GRADE 60) — BASED ON f_y = 60,000 PSI

LIVE LOAD:
COOPER E80 LOADING

CONCRETE COVER:
EXPOSED EDGES OF CONCRETE SHALL HAVE 2" COVER UNLESS DIMENSIONED OTHERWISE.

EXPOSED EDGES:
EXPOSED EDGES OF CONCRETE SHALL BE BEVELED 1" X 1" UNLESS DIMENSIONED OTHERWISE.

PREFORMED EXPANSION JOINT FILLER:
THE COST OF FURNISHING AND INSTALLING PREFORMED EXPANSION JOINT FILLER SHALL BE INCLUDED IN THE COST OF THE ITEM "6' X 5' PRECAST CONCRETE BOX CULVERT".

CONSTRUCTION JOINTS:
CONSTRUCTION JOINTS OTHER THAN THOSE SHOWN ON THE PLANS WILL NOT BE PERMITTED WITHOUT THE PRIOR APPROVAL OF THE ENGINEER.

REINFORCEMENT:
ALL REINFORCEMENT SHALL BE ASTM A615, GRADE 60.

UTILITIES:
THE CONTRACTOR SHALL VERIFY THE SIZE AND LOCATION OF ALL UTILITIES WITHIN THE PROJECT LIMITS PRIOR TO THE START OF CONSTRUCTION AND SHALL TAKE NECESSARY PRECAUTIONS WHEN WORKING NEAR UTILITIES SO AS NOT TO DISTURB THEM. COORDINATE THE REQUIREMENTS FOR PROTECTION AND/OR RELOCATION OF UTILITIES WITH THE UTILITY OWNER PRIOR TO STARTING WORK.

ELEVATIONS:
ALL ELEVATIONS ARE GIVEN IN FEET AND ARE REFERENCED TO NAVD 1988. WHEN ELEVATIONS ARE GIVEN TO LESS THAN TWO DECIMAL PLACES, THE OMITTED DIGITS SHALL BE ASSUMED TO BE ZEROES.

EXISTING DIMENSIONS:
DIMENSIONS OF THE EXISTING STRUCTURE SHOWN ON THESE PLANS ARE FOR GENERAL REFERENCE ONLY. THEY ARE NOT GUARANTEED. THE CONTRACTOR SHALL TAKE ALL FIELD MEASUREMENTS NECESSARY FOR THEIR ACCURACY. WHEN SHOP DRAWINGS BASED ON FIELD MEASUREMENTS ARE SUBMITTED FOR APPROVAL, THE FIELD MEASUREMENT SHALL ALSO BE SUBMITTED FOR REFERENCE BY THE REVIEWER.

PRECAST CONCRETE DIMENSIONS:
THE DIMENSIONS SHOWN ON THE PLANS ARE ASSUMED DIMENSIONS AND ARE FOR THE PURPOSE OF DEMONSTRATING THE REQUIREMENTS OF THE PROJECT. THE CONTRACTOR SHALL SUBMIT WORKING DRAWINGS WHERE REQUIRED BY THE SPECIAL PROVISIONS WHICH SHOW ACTUAL STRUCTURE DIMENSIONS.

ABBREVIATIONS

AS	AS SHOWN
HRR	HOUSATONIC RAILROAD
MP	MILE POST
P/C	PRECAST
ROW	RIGHT OF WAY
RR	RAILROAD
TYP	TYPICAL
WP	WORKING POINT

NOTICE TO BRIDGE INSPECTORS

THE DEPARTMENT'S BRIDGE SAFETY PROCEDURES REQUIRE THIS BRIDGE TO BE INSPECTED FOR, BUT NOT LIMITED TO, ALL APPLICABLE COMPONENTS INDICATED IN THE GOVERNING MANUALS FOR BRIDGE INSPECTION. ATTENTION MUST BE GIVEN TO INSPECTING THE FOLLOWING SPECIAL COMPONENTS AND DETAILS. (THE LISTING OF COMPONENTS FOR SPECIFIC ATTENTION SHALL NOT BE CONSTRUED TO REDUCE THE IMPORTANCE OF INSPECTION OF ANY OTHER COMPONENT OF THE STRUCTURE). THE FREQUENCY OF INSPECTION OF THIS STRUCTURE SHALL BE IN ACCORDANCE WITH THE GOVERNING MANUALS FOR BRIDGE INSPECTION, UNLESS OTHERWISE DIRECTED BY THE MANAGER OF BRIDGE SAFETY AND EVALUATION.

COMPONENT OR DETAIL	STRUCTURE SHEET REFERENCE
NONE	

INSPECTION OF FIELD WELDS

METHOD	UNIT	QUANTITY
ULTRASONIC	inch	0
MAGNETIC PARTICLE	feet	0

TRANSPORTATION DIMENSIONS AND WEIGHT DATA

MEMBER	SHIPPING LENGTH	SHIPPING HEIGHT	SHIPPING WIDTH	SHIPPING WEIGHT
P/C CULVERT	9'-0"	7'-0"	8'-0"	37,500 lbs

HYDRAULIC DATA

DRAINAGE AREA	1.94 SQ MI
DESIGN FREQUENCY	100 YR
DESIGN DISCHARGE	171 CFS
AVERAGE DAILY FLOW ELEVATION	389.00 ESTIMATED
UPSTREAM DESIGN WATER SURFACE ELEVATION	390.26
DOWNSTREAM DESIGN WATER SURFACE ELEVATION	390.26

TABLE OF BRIDGE QUANTITIES

ITEM	UNIT	QTY.
CONSTRUCTION ACCESS	LS	LS
ENVIRONMENTAL HEALTH AND SAFETY	LS	LS
EARTH EXCAVATION	CY	40
CHANNEL EXCAVATION - EARTH	CY	125
EXCAVATION AND REUSE OF EXISTING CHANNEL BOTTOM MATERIAL	CY	110
SETTLEMENT MONITORING PROGRAM	LS	LS
STRUCTURE EXCAVATION - EARTH (COMPLETE)	CY	90
HANDLING WATER (SITE NO. 2)	LS	LS
ANTI-TRACKING PAD	SY	75
GRANULAR FILL	CY	30
BALLAST	CY	25
SUBBALLAST	CY	35
PERVIOUS STRUCTURE BACKFILL	CY	40
SEDIMENTATION CONTROL SYSTEM	LF	750
REMOVAL OF SUPERSTRUCTURE (SITE NO. 2)	LS	LS
PRECAST SUBSTRUCTURE ELEMENTS	CY	5
6'X5' PRECAST CONCRETE BOX CULVERT	LF	36
RETAINING WALL (SITE NO.2)	LS	LS
DAMPPROOFING	SY	90
CONSERVATION SEEDING FOR SLOPES	SY	900
WETLAND GRASS ESTABLISHMENT	SF	2000
SELECTIVE CLEARING AND THINNING (SITE NO. 2)	LS	LS
CONTROL AND REMOVAL OF INVASIVE VEGETATION	SY	300
REMOVAL OF EXISTING MASONRY	CY	50
MOBILIZATION AND PROJECT CLOSEOUT	LS	LS
CONSTRUCTION STAKING (SITE 2)	LS	LS

BORING LEGEND

B-2-X — LOCATION OF BORING PERFORMED BY GEODESIGN, INC. OF MIDDLEBURY, CT BETWEEN MARCH 17, 2014 AND MARCH 19, 2014

⊗ SETTLEMENT MONITORING POINT

REV.	DATE	REVISION DESCRIPTION	SHEET NO.
-	-	-	-
-	-	-	-
-	-	-	-
-	-	-	-
-	-	-	-
-	-	-	-

THE INFORMATION, INCLUDING ESTIMATED QUANTITIES OF WORK, SHOWN ON THESE SHEETS IS BASED ON LIMITED INVESTIGATIONS BY THE STATE AND IS IN NO WAY WARRANTED TO INDICATE THE CONDITIONS OF ACTUAL QUANTITIES OF WORK WHICH WILL BE REQUIRED.

PLOTTED: 7/25/2018

DESIGNER/DRAFTER: BC/CR
CHECKED BY: RB
SCALE AS NOTED

STATE OF CONNECTICUT
DEPARTMENT OF TRANSPORTATION

FILENAME: ...\SB_MSH_170_3192_MP_21.62_S-002.DGN

LOCHNER
H.W. LOCHNER, INC
55 Hartland St
East Hartford, CT 06108

APPROVED BY: R. BRAY
DATE: 12/06/17

STATE OF CONNECTICUT — RICHARD A. BRAY — LICENSED PROFESSIONAL ENGINEER

PROJECT TITLE:
BRIDGE NO. 09204R HOUSATONIC RAILROAD MP 21.62 OVER WOMENSHENUK BROOK

TOWN: **KENT**

DRAWING TITLE: **GENERAL PLAN AND ELEVATION**

PROJECT NO. **170-3192**
DRAWING NO. **S2-2**
SHEET NO. **03.02.03**

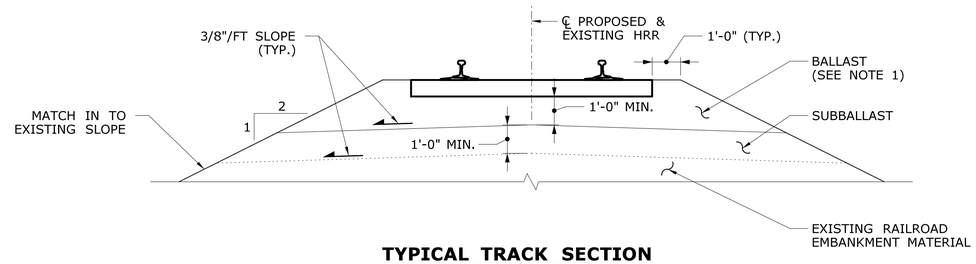

TYPICAL TRACK SECTION

NOT TO SCALE

1. THE CONTRACTOR SHALL INSTALL BALLAST UP TO 4" BELOW THE BOTTOM OF THE RAILROAD TIES.

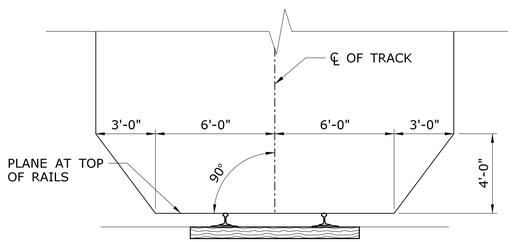

RAILROAD CLEARANCE DIAGRAM

N.T.S.

NOTE:

1. THE LATERAL CLEARANCE EACH SIDE OF TRACK CENTERLINE SHALL BE INCREASED $1\frac{1}{2}$" PER DEGREE OF CURVATURE.

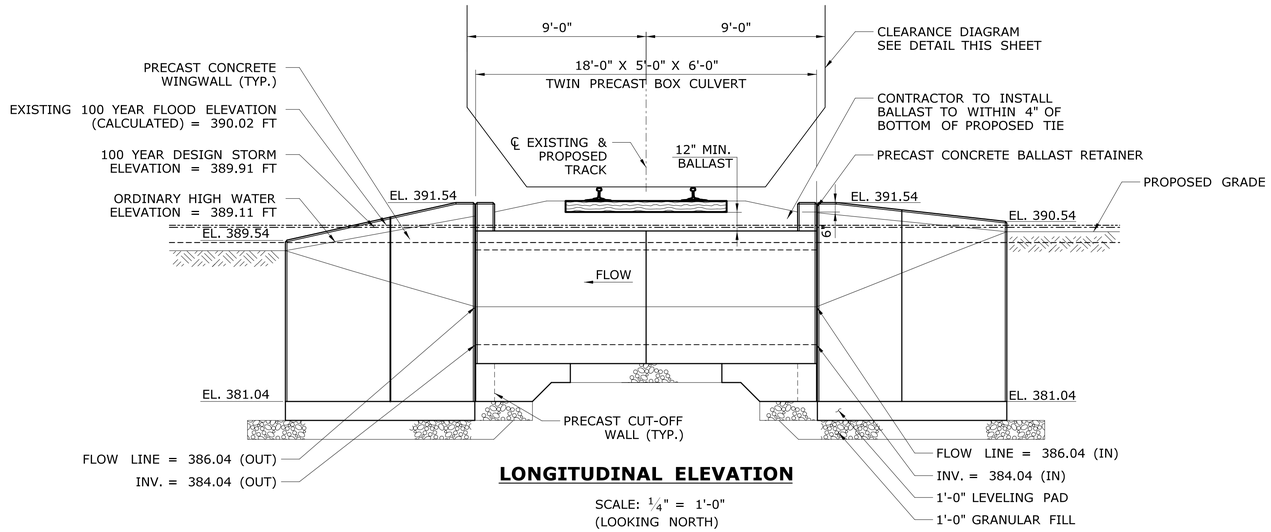

LONGITUDINAL ELEVATION

SCALE: $\frac{1}{4}$" = 1'-0"
(LOOKING NORTH)

GENERAL NOTE:

1. THE SECTION OF TRACK REMOVED FOR THE CONSTRUCTION OF THE REPLACEMENT CULVERTS SHALL BE REPLACED OR REINSTALLED TO MATCH THE EXISTING TRACK GEOMETRY. TRACK GEOMETRY SHOWN HERE IS BASED ON LIMITED FIELD INVESTIGATION.

2. WORKING POINT COORDINATES SHOWN HERE ARE BASED ON THE PRECAST CONCRETE BOX CULVERT GEOMETRY SHOWN IN THESE PLANS.

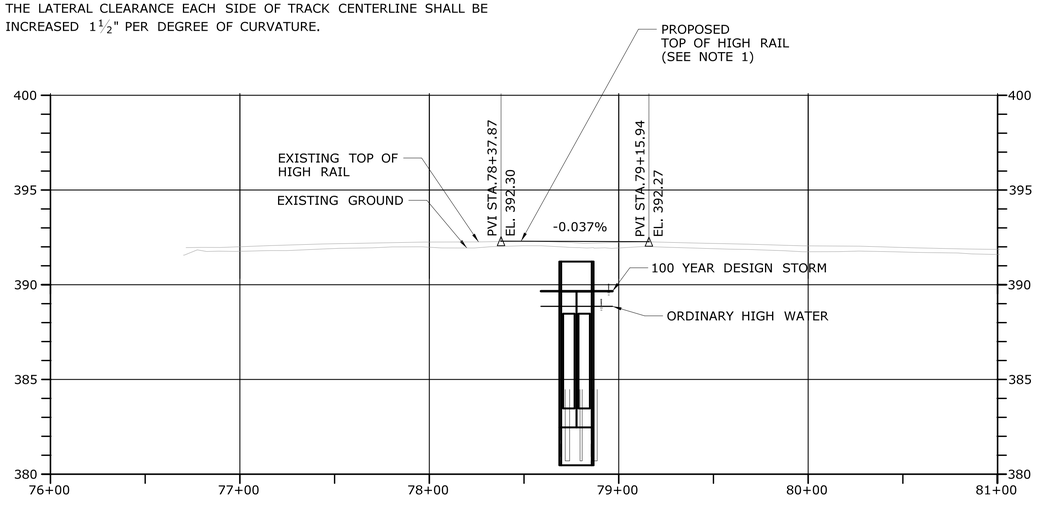

RAILROAD PROFILE

SCALE: VERTICAL 1" = 4'-0"
HORIZONTAL 1" = 40'

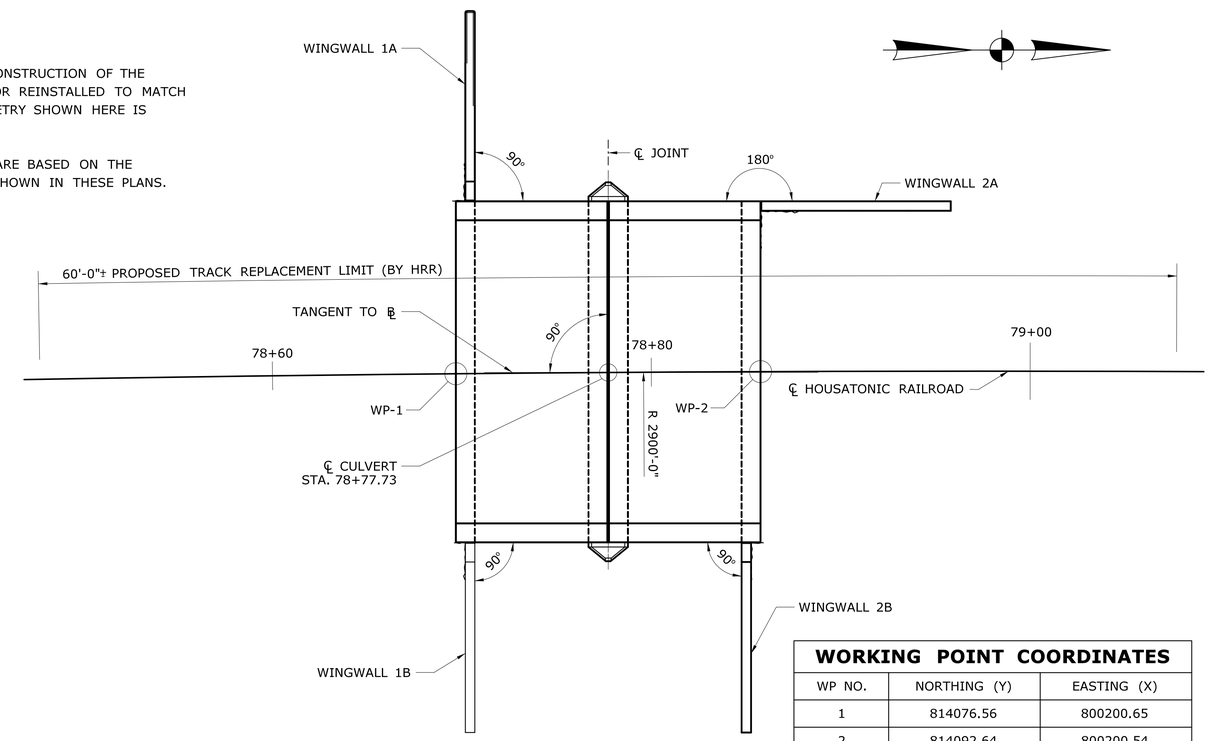

WORKING POINT COORDINATES		
WP NO.	NORTHING (Y)	EASTING (X)
1	814076.56	800200.65
2	814092.64	800200.54

LAYOUT PLAN

SCALE: $\frac{1}{4}$" = 1'-0"

REV.	DATE	REVISION DESCRIPTION	SHEET NO.
-	-	-	-
-	-	-	-
-	-	-	-
-	-	-	-
-	-	-	-
-	-	-	-

THE INFORMATION, INCLUDING ESTIMATED QUANTITIES OF WORK, SHOWN ON THESE SHEETS IS BASED ON LIMITED INVESTIGATIONS BY THE STATE AND IS IN NO WAY WARRANTED TO INDICATE THE CONDITIONS OF ACTUAL QUANTITIES OF WORK WHICH WILL BE REQUIRED.

PLOTTED: 7/25/2018

DESIGNER/DRAFTER: BC/CR
CHECKED BY: RB
SCALE AS NOTED

STATE OF CONNECTICUT
DEPARTMENT OF TRANSPORTATION

FILENAME: ...\SB_MSH_170_3192_MP_21.62_S-003.DGN

LOCHNER
H.W. LOCHNER, INC
55 Hartland St
East Hartford, CT 06108

APPROVED BY: R. BRAY
DATE: 12/06/17

STATE OF CONNECTICUT RICHARD A. BRAY LICENSED PROFESSIONAL ENGINEER

PROJECT TITLE:
BRIDGE NO. 09204R HOUSATONIC RAILROAD MP 21.62 OVER WOMENSHENUK BROOK

TOWN: **KENT**

DRAWING TITLE: **PROFILE, AND TYPICAL SECTIONS**

PROJECT NO. **170-3192**
DRAWING NO. **S2-3**
SHEET NO. **03.02.04**

B-2-1 1 of 1

Driller: Trent Roe	**Connecticut DOT Boring Report**	Hole No.: B-2-1	
Inspector: Robert Marshall	Town: KENT	Stat./Offset: 78+92/0	
Engineer: GeoDesign, Inc.	Project No.: 170-3192 (Geo: 0331-019.00)	Northing: 814098.9	
Start Date: 3-18-14	Route No.:	Easting: 800199.75	
Finish Date: 3-19-14	Bridge No.: 09204R	Surface Elevation: 391.5	
Project Description: Four Railroad Bridges on the Berkshire Line of the Housatonic Railroad (MP 21.62)			
Casing Size/Type: HW-4" ID	Sampler Type/Size: SS:1-3/8" ID	Core Barrel Type:	
Hammer Wt.: 300 lb. Fall: 24in.	Hammer Wt.: 140 lb. Fall: 30 in.		
Groundwater Observations: @2.5 feet after 0 hours			

Depth (ft)	Sample Type/No.	Blows on Sampler per 6 inches	Pen. (in.)	Rec. (in.)	RQD %	Generalized Strata Description	Material Description and Notes	Elevation (ft)
0	S-1	7 8 13 38	24	8		Misc. Fill	Medium dense, brown to black fine to coarse SAND, some fine to coarse Gravel, little Silt, (damp)	390
	S-2	14 7 46 23	24	9			Very dense, brown to dark brown fine to medium SAND, some fine to coarse Gravel, trace (-) Silt, (damp)	
5	S-3	21 16 13 23	24	14			Medium dense, gray to brown fine to medium SAND, little Silt, (wet)	385
	S-4	26 48 50/5"	17	18		Gravelly Sand	Very dense, gray fine to medium SAND, some fine to coarse Gravel, little (-) Silt, (wet)	
10	S-5	25 26 29 18	24	9			Very dense, gray fine to coarse SAND and fine to coarse GRAVEL, little Silt, (wet)	380
15						Boulder		
	S-6	31 20 18 17	24	2		Gravelly Sand	Dense, fine to coarse GRAVEL and coarse SAND, trace Silt, (wet)	375
						Boulder		
20						Gravelly Sand		370
	S-7	13 17 12 14	24	5			Medium dense, gray fine to medium SAND and fine to coarse GRAVEL, little (-) Silt, (wet)	
							END OF BORING 23.5ft	
25								365
30								

Sample Type: S = Split Spoon C = Core UP = Undisturbed Piston V = Vane Shear Test

Proportions Used: Trace = 1 - 10%, Little = 10 - 20%, Some = 20 - 35%, And = 35 - 50%

Total Penetration in Earth: 23.5ft Rock: 0ft	NOTES: 1. Pilot hole to 5 feet with 4" solid stem augers then switched to 4" ID flush joint casing. Augered past obstruction from 2.5 to 4.5 feet. 2. Roller bit pilot hole through boulder from 14.8 to 15.5 feet and from 18 to 21 feet. 3. Unable to advance casing beyond 18 feet with borehole subsequently abandoned following 21.5 to 23.5 foot sample. 4. Boring offset 5 feet north, see Log B-2-1A.	Sheet 1 of 1
No. of Soil Samples: 7 No. of Core Runs: 0		SM-001-M REV. 1/02

B-2-1A 1 of 2

Driller: Trent Roe	**Connecticut DOT Boring Report**	Hole No.: B-2-1A	
Inspector: Robert Marshall	Town: KENT	Stat./Offset: 78+97	
Engineer: GeoDesign, Inc.	Project No.: 170-3192 (Geo: 0331-019.00)	Northing: 814103.9	
Start Date: 3-19-14	Route No.:	Easting: 800199.78	
Finish Date: 3-19-14	Bridge No.: 09204R	Surface Elevation: 391.5	
Project Description: Four Railroad Bridges on the Berkshire Line of the Housatonic Railroad (MP 21.62)			
Casing Size/Type: HW-4" ID	Sampler Type/Size: SS:1-3/8" ID	Core Barrel Type:	
Hammer Wt.: 300 lb. Fall: 24in.	Hammer Wt.: 140 lb. Fall: 30 in.		
Groundwater Observations: @2 feet after 0 hours			

Depth (ft)	Sample Type/No.	Blows on Sampler per 6 inches	Pen. (in.)	Rec. (in.)	RQD %	Generalized Strata Description	Material Description and Notes	Elevation (ft)
0						Misc. Fill		390
5								385
10						Gravelly Sand		380
15								375
20								370
25						Boulder		
	S-1	21 22 34 26	24	6		Gravelly Sand	Very dense, gray fine to medium SAND, some (+) fine to coarse Gravel, little (-) Silt, (wet)	365
30						Sandy Silt		

Sample Type: S = Split Spoon C = Core UP = Undisturbed Piston V = Vane Shear Test

Proportions Used: Trace = 1 - 10%, Little = 10 - 20%, Some = 20 - 35%, And = 35 - 50%

Total Penetration in Earth: 37ft Rock: 0ft	NOTES: 1. Pilot hole to 15 feet with 4" solid stem augers then switched to 4" flush joint casing. 2. Solid stem augers advanced through inferred cobbles/boulders to 9 feet. 3. Roller bit through boulder from 24.8 to 25.5 feet. 4. Casing advanced to 25.5 feet prior to taking first sample.	Sheet 1 of 2
No. of Soil Samples: 3 No. of Core Runs: 0		SM-001-M REV. 1/02

B-2-1A 2 of 2

Driller: Trent Roe	**Connecticut DOT Boring Report**	Hole No.: B-2-1A	
Inspector: Robert Marshall	Town: KENT	Stat./Offset: 78+97	
Engineer: GeoDesign, Inc.	Project No.: 170-3192 (Geo: 0331-019.00)	Northing: 814103.9	
Start Date: 3-19-14	Route No.:	Easting: 800199.78	
Finish Date: 3-19-14	Bridge No.: 09204R	Surface Elevation: 391.5	
Project Description: Four Railroad Bridges on the Berkshire Line of the Housatonic Railroad (MP 21.62)			
Casing Size/Type: HW-4" ID	Sampler Type/Size: SS:1-3/8" ID	Core Barrel Type:	
Hammer Wt.: 300 lb. Fall: 24in.	Hammer Wt.: 140 lb. Fall: 30 in.		
Groundwater Observations: @2 feet after 0 hours			

Depth (ft)	Sample Type/No.	Blows on Sampler per 6 inches	Pen. (in.)	Rec. (in.)	RQD %	Generalized Strata Description	Material Description and Notes	Elevation (ft)
30	S-2	3 5 10 12	24	7		Sandy Silt *(con't)*	Medium dense, fine to coarse SAND and SILT, trace fine Gravel, trace Clay, (damp)	360
						Gravelly Sand		
35	S-3	8 14 14 19	24	11			Medium dense, gray fine to medium SAND, some Silt, little fine to coarse Gravel, (wet)	355
							END OF BORING 37ft	
40								350
45								345
50								340
55								335
60								

Sample Type: S = Split Spoon C = Core UP = Undisturbed Piston V = Vane Shear Test

Proportions Used: Trace = 1 - 10%, Little = 10 - 20%, Some = 20 - 35%, And = 35 - 50%

Total Penetration in Earth: 37ft Rock: 0ft	NOTES: 1. Pilot hole to 15 feet with 4" solid stem augers then switched to 4" flush joint casing. 2. Solid stem augers advanced through inferred cobbles/boulders to 9 feet. 3. Roller bit through boulder from 24.8 to 25.5 feet. 4. Casing advanced to 25.5 feet prior to taking first sample.	Sheet 2 of 2
No. of Soil Samples: 3 No. of Core Runs: 0		SM-001-M REV. 1/02

-	-	-	-
-	-	-	-
-	-	-	-
-	-	-	-
-	-	-	-
-	-	-	-

THE INFORMATION, INCLUDING ESTIMATED QUANTITIES OF WORK, SHOWN ON THESE SHEETS IS BASED ON LIMITED INVESTIGATIONS BY THE STATE AND IS IN NO WAY WARRANTED TO INDICATE THE CONDITIONS OF ACTUAL QUANTITIES OF WORK WHICH WILL BE REQUIRED.

GEODESIGN

GEODESIGN

NOT TO SCALE

STATE OF CONNECTICUT
DEPARTMENT OF TRANSPORTATION

GEODESIGN
A M E C Company
Geotechnical Construction Environmental
Engineers & Scientists
984 Southford Road • Middlebury, CT 06762
Telephone: (203) 758-8836 Fax: (203) 758-8842

APPROVED BY: R. BRAY
DATE: 11/01/16

STATE OF CONNECTICUT
RICHARD A. BRAY
LICENSED PROFESSIONAL ENGINEER

BRIDGE NO. 09204R HOUSATONIC RAILROAD MP 21.62 OVER WOMENSHENUK BROOK

KENT

BORING LOGS-1

170-3192

S2-4

03.02.05

B-2-2 1 of 2

Driller: Trent Roe	**Connecticut DOT Boring Report**		Hole No.: B-2-2
Inspector: Robert Marshall	Town: KENT		Stat./Offset: 78+67/0
Engineer: GeoDesign, Inc.	Project No.: 170-3192 (Geo: 0331-019.00)		Northing: 814074.19
Start Date: 3-17-14	Route No.:		Easting: 800200.59
Finish Date: 3-18-14	Bridge No.: 09204R		Surface Elevation: 391.5
Project Description: Four Railroad Bridges on the Berkshire Line of the Housatonic Railroad (MP 21.62)			
Casing Size/Type: HW-4" ID	Sampler Type/Size: SS:1-3/8" ID		Core Barrel Type:
Hammer Wt.: 300 lb. Fall: 24in.	Hammer Wt.: 140 lb. Fall: 30 in.		
Groundwater Observations: @2 feet after 0 hours			

Depth (ft)	Sample Type/No.	Blows on Sampler per 6 inches	Pen. (in.)	Rec. (in.)	RQD %	Generalized Strata Description	Material Description and Notes	Elevation (ft)
0	S-1	7 8 10 7	24	12		Misc. Fill	Medium dense, black to brown fine to coarse SAND, little fine to coarse Gravel, little (-) Silt, (damp)	390
	S-2	5 2 1 2	24	2			Very loose, brown fine to medium SAND, little fine to coarse Gravel, little (-) Silt, (wet)	
5	S-3	14 19 16 21	24	16		Gravelly Sand	Dense, brown fine to medium SAND, some (-) fine to coarse Gravel, little (-) Silt, (wet)	385
	S-4	18 32 31 26	24	7			Very dense, brown fine to coarse SAND, little (+) Silt, little fine to coarse Gravel, (damp)	
10	S-5	22 22 23 29	24	8			Dense, gray brown fine to coarse SAND, some fine to coarse Gravel, little (-) Silt, (wet)	380
15	S-6	15 21 17 14	24	11			Medium dense, gray brown fine to coarse SAND, some fine to coarse Gravel, little Silt, (wet)	375
20	S-7	15 23 26 28	24	12			Dense, gray brown fine to coarse SAND, some fine to coarse Gravel, trace Silt, (wet)	370
25	S-8	28 25 22 19	24	7			Dense, gray brown fine to coarse SAND, some fine to coarse Gravel, trace Silt, (wet)	365
30								

Sample Type: S = Split Spoon C = Core UP = Undisturbed Piston V = Vane Shear Test

Proportions Used: Trace = 1 - 10%, Little = 10 - 20%, Some = 20 - 35%, And = 35 - 50%

Total Penetration in Earth: 50ft Rock: 0ft	NOTES: 1. Boring advanced to 10 feet using 4" OD solid stem augers then switched 4" ID flush joint casing. 2. Roller bit broke off down hole during advancement to 50 foot depth through inferred gravelly sands, unable to obtain sample at 50 feet.	Sheet 1 of 2
No. of Soil Samples: 12 No. of Core Runs: 0		SM-001-M REV. 1/02

B-2-2 2 of 2

Driller: Trent Roe	**Connecticut DOT Boring Report**		Hole No.: B-2-2
Inspector: Robert Marshall	Town: KENT		Stat./Offset: 78+67/0
Engineer: GeoDesign, Inc.	Project No.: 170-3192 (Geo: 0331-019.00)		Northing: 814074.19
Start Date: 3-17-14	Route No.:		Easting: 800200.59
Finish Date: 3-18-14	Bridge No.: 09204R		Surface Elevation: 391.5
Project Description: Four Railroad Bridges on the Berkshire Line of the Housatonic Railroad (MP 21.62)			
Casing Size/Type: HW-4" ID	Sampler Type/Size: SS:1-3/8" ID		Core Barrel Type:
Hammer Wt.: 300 lb. Fall: 24in.	Hammer Wt.: 140 lb. Fall: 30 in.		
Groundwater Observations: @2 feet after 0 hours			

Depth (ft)	Sample Type/No.	Blows on Sampler per 6 inches	Pen. (in.)	Rec. (in.)	RQD %	Generalized Strata Description	Material Description and Notes	Elevation (ft)
30	S-9	21 18 20 22	24	12		Gravelly Sand *(con't)*	Dense, gray fine to medium SAND, some fine to coarse Gravel, little Silt, (wet)	360
35	S-10	23 24 23 21	24	4			Dense, gray fine to medium SAND, some fine to coarse Gravel, little Silt, (wet)	355
40	S-11	31 43 35 34	24	16			Very dense, gray fine to medium SAND, some fine to coarse Gravel, little Silt, (wet)	350
45	S-12	10 18 54 46	24	11			Very dense, gray fine to medium SAND, some fine to coarse Gravel, little Silt, (wet)	345
50							END OF BORING 50ft	340
55								335
60								

Sample Type: S = Split Spoon C = Core UP = Undisturbed Piston V = Vane Shear Test

Proportions Used: Trace = 1 - 10%, Little = 10 - 20%, Some = 20 - 35%, And = 35 - 50%

Total Penetration in Earth: 50ft Rock: 0ft	NOTES: 1. Boring advanced to 10 feet using 4" OD solid stem augers then switched 4" ID flush joint casing. 2. Roller bit broke off down hole during advancement to 50 foot depth through inferred gravelly sancs, unable to obtain sample at 50 feet.	Sheet 2 of 2
No. of Soil Samples: 12 No. of Core Runs: 0		SM-001-M REV. 1/02

REV.	DATE	REVISION DESCRIPTION	SHEET NO.
-	-	-	-
-	-	-	-
-	-	-	-
-	-	-	-
-	-	-	-
-	-	-	-

THE INFORMATION, INCLUDING ESTIMATED QUANTITIES OF WORK, SHOWN ON THESE SHEETS IS BASED ON LIMITED INVESTIGATIONS BY THE STATE AND IS IN NO WAY WARRANTED TO INDICATE THE CONDITIONS OF ACTUAL QUANTITIES OF WORK WHICH WILL BE REQUIRED.

PLOTTED: 7/25/2018

DESIGNER/DRAFTER: GEODESIGN

CHECKED BY: GEODESIGN

NOT TO SCALE

STATE OF CONNECTICUT
DEPARTMENT OF TRANSPORTATION

FILENAME: ...\SB_MSH_170_3192_MP_21.62_S-005.dgn

GEODESIGN INCORPORATED
Geotechnical Construction Environmental
Engineers & Scientists
964 Southford Road Middlebury, CT 06762
Telephone (203) 758-8264 Fax (203) 758-8842

APPROVED BY: R. BRAY DATE: 12/06/17

STATE OF CONNECTICUT RICHARD A. BRAY LICENSED PROFESSIONAL ENGINEER

PROJECT TITLE:
BRIDGE NO. 09204R HOUSATONIC RAILROAD MP 21.62 OVER WOMENSHENUK BROOK

TOWN: **KENT**

DRAWING TITLE: **BORING LOGS-2**

PROJECT NO. **170-3192**

DRAWING NO. **S2-5**

SHEET NO. **03.02.06**

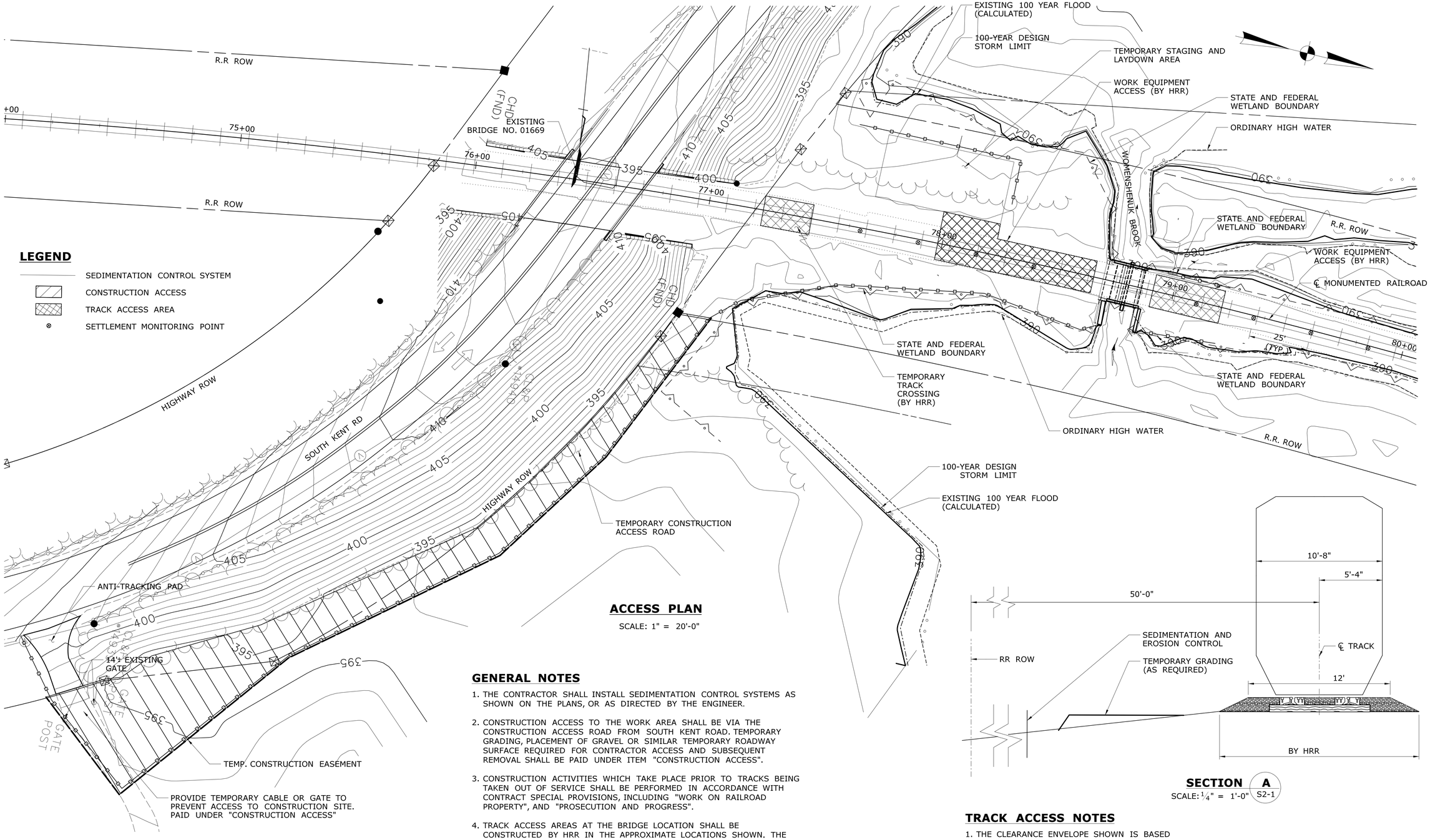

LEGEND

- SEDIMENTATION CONTROL SYSTEM
- CONSTRUCTION ACCESS
- TRACK ACCESS AREA
- SETTLEMENT MONITORING POINT

ACCESS PLAN

SCALE: 1" = 20'-0"

SECTION A

SCALE: 1/4" = 1'-0" (S2-1)

GENERAL NOTES

1. THE CONTRACTOR SHALL INSTALL SEDIMENTATION CONTROL SYSTEMS AS SHOWN ON THE PLANS, OR AS DIRECTED BY THE ENGINEER.
2. CONSTRUCTION ACCESS TO THE WORK AREA SHALL BE VIA THE CONSTRUCTION ACCESS ROAD FROM SOUTH KENT ROAD. TEMPORARY GRADING, PLACEMENT OF GRAVEL OR SIMILAR TEMPORARY ROADWAY SURFACE REQUIRED FOR CONTRACTOR ACCESS AND SUBSEQUENT REMOVAL SHALL BE PAID UNDER ITEM "CONSTRUCTION ACCESS".
3. CONSTRUCTION ACTIVITIES WHICH TAKE PLACE PRIOR TO TRACKS BEING TAKEN OUT OF SERVICE SHALL BE PERFORMED IN ACCORDANCE WITH CONTRACT SPECIAL PROVISIONS, INCLUDING "WORK ON RAILROAD PROPERTY", AND "PROSECUTION AND PROGRESS".
4. TRACK ACCESS AREAS AT THE BRIDGE LOCATION SHALL BE CONSTRUCTED BY HRR IN THE APPROXIMATE LOCATIONS SHOWN. THE CONTRACTOR SHALL COORDINATE LIMITS OF ACCESS AREAS WITH THE ENGINEER.

TRACK ACCESS NOTES

1. THE CLEARANCE ENVELOPE SHOWN IS BASED ON AREMA PLATE "F"

REV.	DATE	REVISION DESCRIPTION	SHEET NO.
-	-	-	-
-	-	-	-
-	-	-	-
-	-	-	-
-	-	-	-
-	-	-	-

THE INFORMATION, INCLUDING ESTIMATED QUANTITIES OF WORK, SHOWN ON THESE SHEETS IS BASED ON LIMITED INVESTIGATIONS BY THE STATE AND IS IN NO WAY WARRANTED TO INDICATE THE CONDITIONS OF ACTUAL QUANTITIES OF WORK WHICH WILL BE REQUIRED.

PLOTTED: 7/25/2018

DESIGNER/DRAFTER: BC/CR
CHECKED BY: RB
SCALE AS NOTED

STATE OF CONNECTICUT
DEPARTMENT OF TRANSPORTATION

FILENAME: ...\SB_MSH_170_3192_MP_21.62_S-006.DGN

LOCHNER
H.W. LOCHNER, INC
55 Hartland St
East Hartford, CT 06108

APPROVED BY: R. BRAY DATE: 12/06/17

STATE OF CONNECTICUT RICHARD A. BRAY LICENSED PROFESSIONAL ENGINEER

PROJECT TITLE:
BRIDGE NO. 09204R HOUSATONIC RAILROAD MP 21.62 OVER WOMENSHENUK BROOK

TOWN: **KENT**

DRAWING TITLE: **CONSTRUCTION ACCESS PLAN**

PROJECT NO. **170-3192**
DRAWING NO. **S2-6**
SHEET NO. **03.02.07**

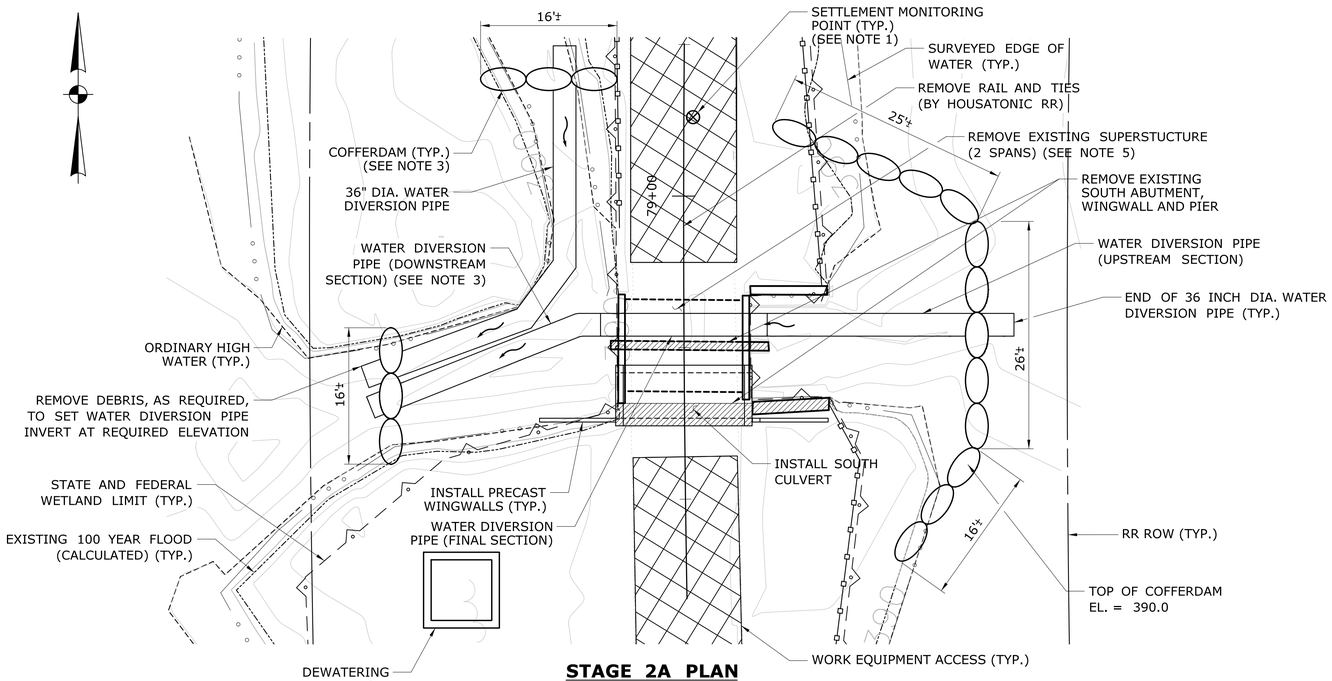

STAGE 2A PLAN

SCALE: 1" = 10'-0"

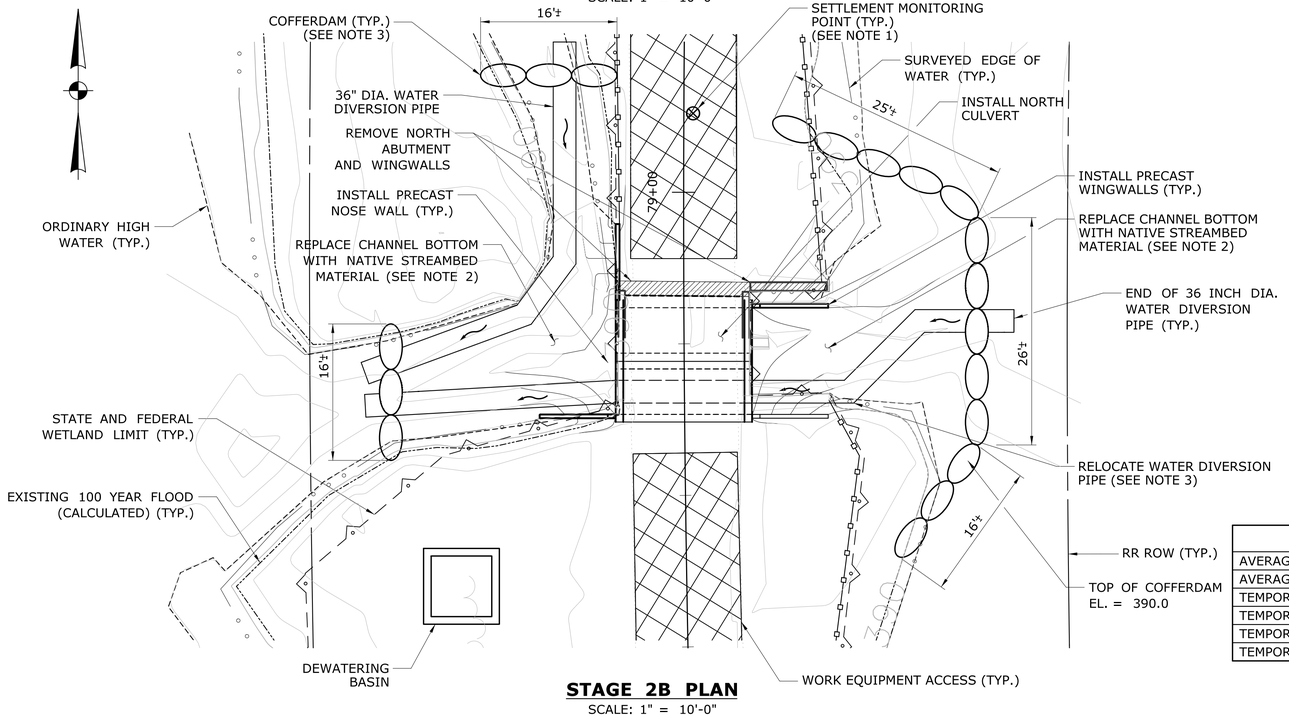

STAGE 2B PLAN

SCALE: 1" = 10'-0"

LEGEND

- REMOVAL OF EXISTING MASONRY
- SEDIMENTATION CONTROL SYSTEM
- COFFERDAM SYSTEM

NOTES:

1. FOR SETTLEMENT MONITORING POINT SUGGESTED LOCATIONS AND SPACING,SEE CONSTRUCTION ACCESS PLAN.
2. FOR LIMITS OF PLACEMENT FOR NATURAL CHANNEL BOTTOM MATERIAL, SEE WINGWALL DETAILS.
3. THE COST TO PLACE THE COFFERDAM, WATER DIVERSION PIPE AND RELOCATING WATER DIVERSION PIPE SHALL BE PAID UNDER THE ITEM "HANDLING WATER (SITE NO. 2)".
4. THE COST TO PROVIDE PUMPS SHALL BE PAID UNDER THE ITEM "HANDLING WATER (SITE NO. 2)".
5. THE EXISTING BRIDGE SUPERSTRUCTURE IS ASSUMED TO CONSIST OF STEEL STRINGERS SUPPORTING A CONCRETE DECK. THE CONTRACTOR SHALL VERIFY EXISTING CONDITIONS.

TEMP. HYDRAULIC DATA

AVERAGE DAILY FLOW	4 CFS
AVERAGE SPRING FLOW	7 CFS
TEMPORARY DESIGN DISCHARGE	7 CFS
TEMPORARY DESIGN FREQUENCY	2-YEAR
TEMPORARY WATER SURFACE ELEVATION UPSTREAM	389.20
TEMPORARY WATER SURFACE ELEVATION DOWNSTREAM	386.96

THE STEPS LISTED ARE NOT INTENDED TO COVER ALL DETAILS OF THE WORK. THE CONTRACTOR SHALL PREPARE A DETAILED SEQUENCE AND SCHEDULE. STRUCTURE WORK MUST BE COORDINATED AND SEQUENCED WITH OTHER PROJECT WORK.

STAGE 1 (TRACK IN SERVICE)

THE FOLLOWING STEPS WILL BE PERFORMED BY THE CONTRACTOR, UNLESS OTHERWISE NOTED, DURING SHORT TERM TRACK OUTAGES (DAILY OR WEEKEND).

1. INSTALL SEDIMENTATION CONTROL SYSTEM.
2. CONSTRUCT TEMPORARY ACCESS ROADWAY AND ANTI-TRACKING PAD.
3. INSTALL SETTLEMENT MONITORING POINTS AS SHOWN ON THE PLANS. BEGIN SETTLEMENT MONITORING PROGRAM.
4. HRR SHALL CONSTRUCT TEMPORARY TRACK CROSSING AND TEMPORARY EQUIPMENT ACCESS.
5. PREPARE CONSTRUCTION STAGING/LAYDOWN AREA WITHIN RAILROAD ROW.
6. INSTALL COFFERDAM. PLACE WATER DIVERSION PIPE FROM UPSTREAM AND DOWNSTREAM COFFERDAMS. TOP OF COFFERDAM TO BE AT ELEVATION 390.0. PIPE INVERT TO BE 386'±.

STAGE 2A (TRACK OUT OF SERVICE)

THE FOLLOWING STEPS SHALL BE PERFORMED DURING A LONG TERM TRACK OUTAGE. ALL WORK IN STAGE 2A SHALL BE PERFORMED BY THE CONTRACTOR UNLESS NOTED OTHERWISE.

1. HRR SHALL REMOVE TRACK AND TIES WITHIN THE APPROXIMATE LIMITS SHOWN ON THE PLANS.
2. REMOVE BALLAST AND SUBBALLAST TO TOP OF EXISTING STRUCTURE.
3. REMOVE EXISTING SUPERSTRUCTURE.
4. BEGIN PUMPING TO REMOVE WATER FROM WORK AREA. SEE NOTE 4.
5. REMOVE PIER STEM. REMOVE CHANNEL BOTTOM MATERIAL FROM CHANNEL, PARTICULARLY AT THE FACE OF THE NORTH ABUTMENT.
6. PLACE FINAL SECTION OF WATER DIVERSION PIPE TO ESTABLISH FLOW.
7. EXCAVATE BEHIND AND REMOVE SOUTH ABUTMENT AND FOOTING. REMOVE WINGWALLS. EXCAVATION AND STORAGE OF CHANNEL BOTTOM MATERIAL SHALL BE IN ACCORDANCE WITH THE ITEM "EXCAVATION AND REUSE OF EXISTING CHANNEL BOTTOM MATERIAL"
8. REMOVE PIER FOOTING.
9. PLACE GRANULAR FILL TO THE LIMITS SHOWN
10. PLACE PRECAST CUTOFF WALLS, AND RETURN WALLS.
11. PLACE SOUTH CULVERT SECTION. EDGE OF BOTTOM SLAB SHALL ALIGN WITH EDGE OF CUTOFF WALL.
12. APPLY DAMPPROOFING TO CULVERT TOP AND SIDES.
13. DRILL HOLES INTO PRECAST CUTOFF WALL. PLACE ANCHOR BARS. GROUT WITH NON-SHRINK GROUT.
14. INSTALL WINGWALLS 1A AND 1B.
15. PLACE PERVIOUS STRUCTURE BACKFILL BEHIND CULVERT AND WINGWALLS.

STAGE 2B (TRACK OUT OF SERVICE)

THE FOLLOWING STEPS SHALL BE PERFORMED DURING A LONG TERM TRACK OUTAGE IN COORDINATION WITH HRR. ALL WORK IN STAGE 2B SHALL BE PERFORMED BY THE CONTRACTOR UNLESS NOTED OTHERWISE.

1. SHIFT WATER DIVERSION PIPE TO PASS THROUGH CULVERT SECTION PLACED IN STAGE 2A, AS SHOWN ON THE PLANS.
2. EXCAVATE TO LIMITS SHOWN. REMOVE NORTH ABUTMENT AND FOOTING. REMOVE WINGWALLS. EXCAVATION AND STORAGE OF CHANNEL BOTTOM MATERIAL SHALL BE IN ACCORDANCE WITH THE ITEM "EXCAVATION AND REUSE OF EXISTING CHANNEL BOTTOM MATERIAL".
3. PLACE GRANULAR FILL.
4. INSTALL THREADED ANCHOR BAR INTO CUTOFF WALL INSTALLED IN STAGE 2A.
5. PLACE REMAINING SECTION OF THE PRECAST CUTOFF WALL AND RETURN WALL. SECURE THE SECTIONS UTILIZING THREADED ANCHOR BARS INTO THE GROUT SLEEVES CAST INTO THE CUTOFF WALL.
6. APPLY DAMPPROOFING TO WALL FACE MATCHING PREVIOUSLY PLACED SECTION PRIOR TO PLACING CULVERT SECTION.
7. PLACE NORTH CULVERT SECTION. EDGE OF BOTTOM SLAB SHALL ALIGN WITH EDGE OF CUTOFF WALL.
8. APPLY DAMPPROOFING TO EXPOSED SIDES OF CULVERT.
9. DRILL HOLES INTO PRECAST CUTOFF WALL. PLACE ANCHOR BARS. GROUT WITH NON-SHRINK GROUT.
10. INSTALL WINGWALLS 2A AND 2B.
11. PLACE PERVIOUS STRUCTURE BACKFILL BEHIND CULVERT AND WINGWALLS.
12. INSTALL PRECAST NOSEWALL SECTIONS. AFTER INSTALLATION OF NOSEWALL, FLOAT SAND INTO 1" JOINT BETWEEN CULVERT SECTIONS. INSTALL PRECAST BALLAST RETAINER SECTIONS AT CULVERT ENDS.
13. PLACE SUBBALLAST.
14. PLACE BALLAST TO 4" BELOW BOTTOM OF TIES.
15. HRR SHALL COMPLETE BALLAST INSTALLATION, PLACE TIES, AND RAIL.

STAGE 3 (TRACK IN SERVICE)

THE FOLLOWING STEPS MAY BE PERFORMED WITH TRACK IN SERVICE, IN COORDINATION WITH HRR. THE CONTRACTOR SHALL HAVE THE OPTION OF COMPLETING STAGE 3 WORK PRIOR TO RESTORATION OF TRACK OPERATION; HOWEVER, ALL WORK MUST BE COMPLETE WITHIN THE LIMITS OF THE SCHEDULED TRACK OUTAGE. ALL WORK IN STAGE 3 SHALL BE PERFORMED BY THE CONTRACTOR UNLESS NOTED OTHERWISE.

1. SET CHANNEL BOTTOM MATERIAL TO THE LIMITS SHOWN. PLACE CHANNEL BOTTOM MATERIAL WITHIN THE NORTH CULVERT SECTION.
2. REMOVE WATER DIVERSION PIPE FROM SOUTH CULVERT SECTION. COFFERDAM SHALL REMAIN IN PLACE. PLACE CHANNEL BOTTOM
3. MATERIAL WITHIN THE SOUTH CULVERT SECTION. REMOVE COFFERDAM AND RESTORE CHANNEL FLOW.

REV.	DATE	REVISION DESCRIPTION	SHEET NO.
-	-	-	-
-	-	-	-
-	-	-	-
-	-	-	-
-	-	-	-
-	-	-	-

THE INFORMATION, INCLUDING ESTIMATED QUANTITIES OF WORK, SHOWN ON THESE SHEETS IS BASED ON LIMITED INVESTIGATIONS BY THE STATE AND IS IN NO WAY WARRANTED TO INDICATE THE CONDITIONS OF ACTUAL QUANTITIES OF WORK WHICH WILL BE REQUIRED.

PLOTTED: 7/25/2018

DESIGNER/DRAFTER: BC/CR
CHECKED BY: RB
SCALE IN FEET 0 10 20
SCALE 1"=10'

STATE OF CONNECTICUT
DEPARTMENT OF TRANSPORTATION

FILENAME: ...\SB_MSH_170_3192_MP_21.62_S-007.DGN

LOCHNER
H.W. LOCHNER, INC
55 Hartland St
East Hartford, CT 06108

APPROVED BY: R. BRAY DATE: 12/06/17

STATE OF CONNECTICUT RICHARD A. BRAY LICENSED PROFESSIONAL ENGINEER

PROJECT TITLE:
BRIDGE NO. 09204R HOUSATONIC RAILROAD MP 21.62 OVER WOMENSHENUK BROOK

TOWN: **KENT**

DRAWING TITLE: **STAGE CONSTRUCTION**

PROJECT NO. **170-3192**
DRAWING NO. **S2-7**
SHEET NO. **03.02.08**

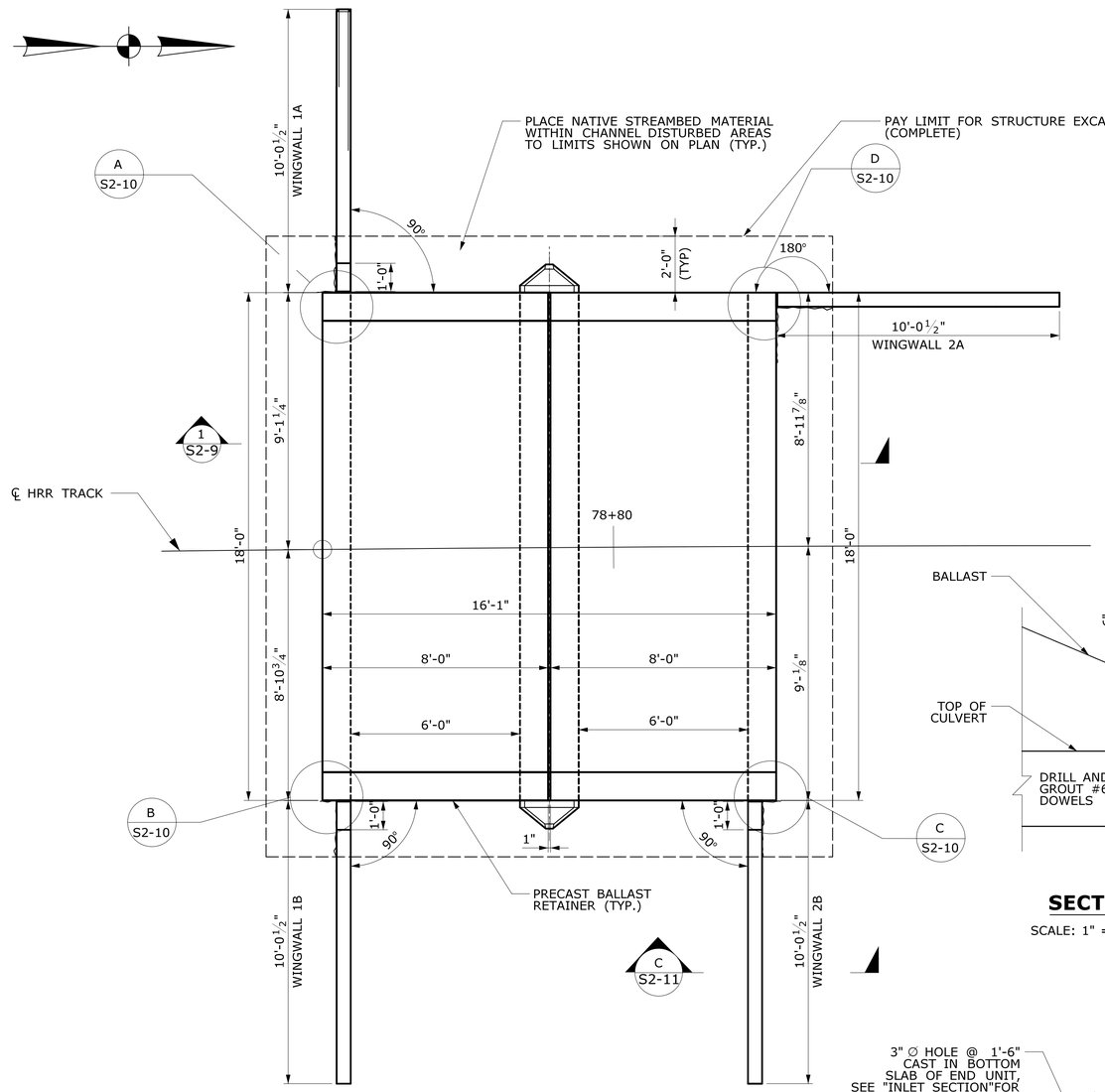

PLAN

SCALE: ⅜" = 1'-0"

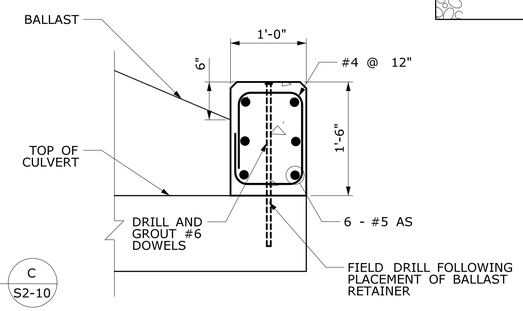

SECTION A

SCALE: 1" = 1'-0"

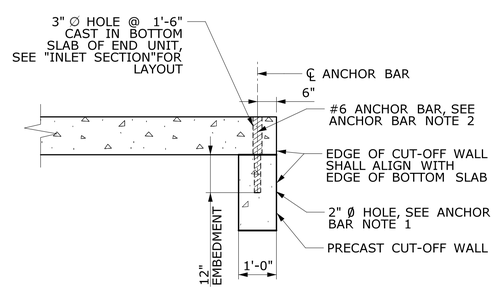

SECTION B

SCALE: ½ = 1'-0"

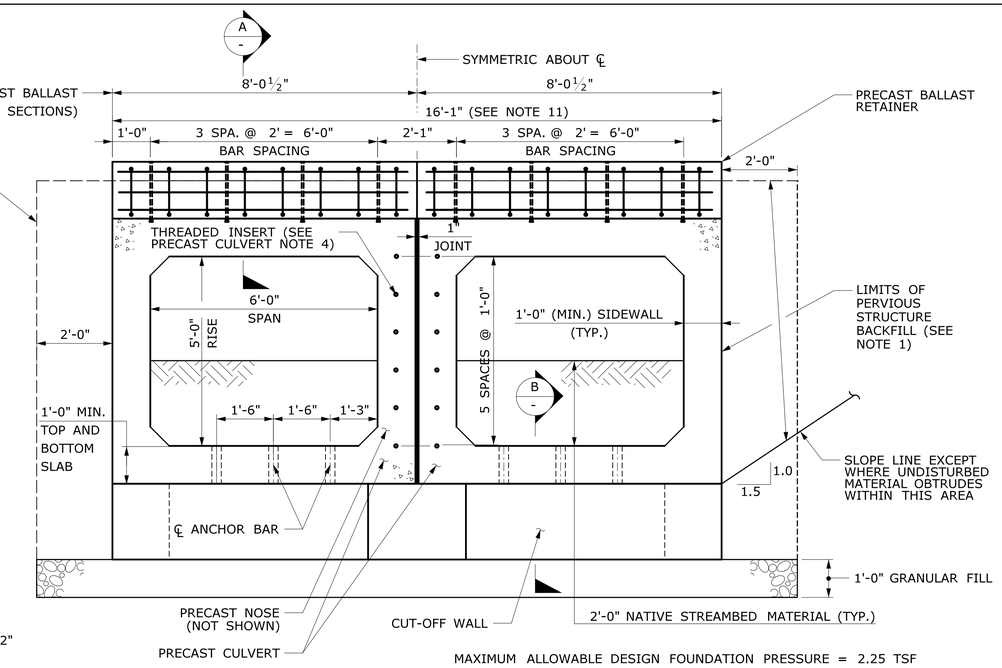

INLET SECTION (OUTLET SIMILAR)

SCALE: ½" = 1'-0"

NOTES:

1. PAYMENT FOR EXCAVATION FOR THE PLACEMENT OF PERVIOUS STRUCTURE BACKFILL OUTSIDE THE LIMITS OF "STRUCTURE EXCAVATION -EARTH (COMPLETE)" SHALL BE PAID UNDER THE ITEM "EARTH EXCAVATION"

ANCHOR BAR NOTES:

1. DRILL 2" Ø HOLE INTO CUT-OFF WALL AFTER PLACING END UNIT.
2. GROUT #6 X 1'-6" LONG ANCHOR BAR CENTERED IN HOLE WITH NON-SHRINK GROUT.

PRECAST CULVERT NOTES:

1. THE CONTRACTOR SHALL DESIGN, MANUFACTURE AND CONSTRUCT PRECAST BOX CULVERT IN ACCORDANCE WITH THE SPECIAL PROVISIONS FOR 6'X5' PRECAST CONCRETE BOX CULVERT AND THE INSIDE DIMENSIONS, LENGTH, AND DETAILS SHOWN ON THESE PLANS.
2. ALL INSERTS OR HOLES CAST INTO THE CULVERT SECTIONS FOR THE SOLE PURPOSE OF HANDLING AND SETTING THE UNITS SHALL BE GROUTED OVER TO A SMOOTH FINISH UPON COMPLETION OF THE WORK.
3. NON-SHRINK GROUT SHALL BE USED TO GROUT THE REINFORCEMENT.
4. PROVIDE HOLES IN END UNITS FOR ANCHOR BARS AT CUT-OFF-WALLS. SEE ANCHOR BAR DETAIL ON THIS SHEET FOR MORE INFORMATION.
5. THE CONTRACTOR SHALL DESIGN, MANUFACTURE, AND CONSTRUCT ALL PRECAST SUBSTRUCTURE ELEMENTS IN ACCORDANCE WITH THE SPECIAL PROVISION FOR "PRECAST SUBSTRUCTURE ELEMENTS" AND THE DIMENSIONS, LENGTH, AND DETAILS SHOWN ON THESE PLANS.
6. PAYMENT FOR ALL PRECAST ELEMENTS, INCLUDING BALLAST RETAINER, CUTOFF WALL, RETURN WALLS, AND NOSE SHALL BE PAID UNDER THIS ITEM.
7. ALL REINFORCEMENT TO HAVE A 2" COVER UNLESS OTHERWISE NOTED.
8. SOME DIMENSIONS ARE BASED ON ASSUMPTION THAT CONTRACTOR'S DESIGN OF PRECAST CULVERTS WILL USE THE MINIMUM WALL THICKNESS OF 12". THESE DIMENSIONS SHALL BE INCREASED IF WALL THICKNESS IS GREATER.

REV.	DATE	REVISION DESCRIPTION	SHEET NO.
-	-	-	-
-	-	-	-
-	-	-	-
-	-	-	-
-	-	-	-
-	-	-	-

THE INFORMATION, INCLUDING ESTIMATED QUANTITIES OF WORK, SHOWN ON THESE SHEETS IS BASED ON LIMITED INVESTIGATIONS BY THE STATE AND IS IN NO WAY WARRANTED TO INDICATE THE CONDITIONS OF ACTUAL QUANTITIES OF WORK WHICH WILL BE REQUIRED.

PLOTTED: 7/25/2018

DESIGNER/DRAFTER: BC/CR
CHECKED BY: RB
SCALE AS NOTED

STATE OF CONNECTICUT
DEPARTMENT OF TRANSPORTATION

FILENAME: ...\SB_MSH_170_3192_MP_21.62_S-008.DGN

LOCHNER
H.W. LOCHNER, INC
55 Hartland St
East Hartford, CT 06108

APPROVED BY: R. BRAY DATE: 12/06/17

STATE OF CONNECTICUT RICHARD A. BRAY LICENSED PROFESSIONAL ENGINEER

PROJECT TITLE: BRIDGE NO. 09204R HOUSATONIC RAILROAD MP 21.62 OVER WOMENSHENUK BROOK

TOWN: KENT

DRAWING TITLE: CULVERT PLAN AND ELEVATION

PROJECT NO. 170-3192
DRAWING NO. S2-8
SHEET NO. 03.02.09

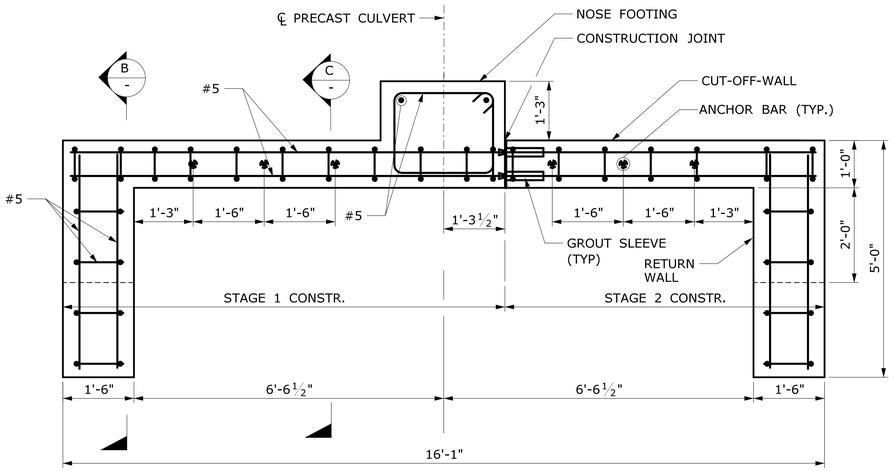

CUTOFF/RETURN WALL

(WEST SIDE SHOWN, EAST SIDE SIMILAR)
SCALE: 5/8" = 1'-0"

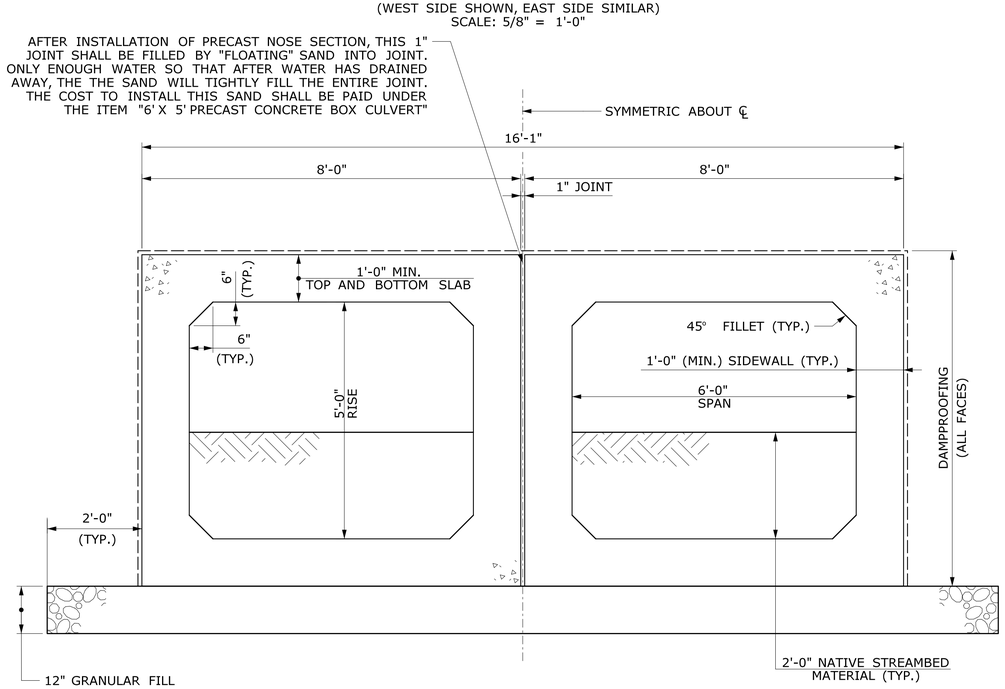

SECTION 1 / S2-8
SCALE: 5/8" = 1'-0"

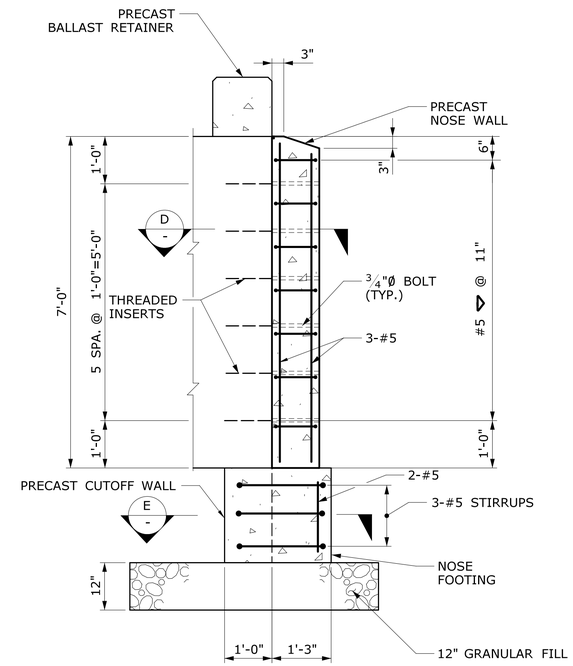

SECTION THRU CULVERT CENTERLINE

SCALE: 5/8" = 1'-0"

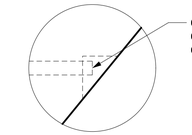

DETAIL X
SCALE: 3" = 1'-0"

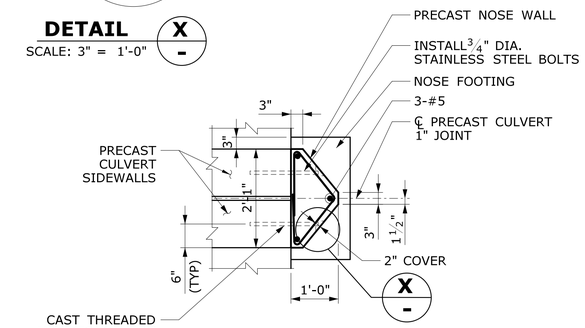

SECTION D
SCALE: 5/8" = 1'-0"

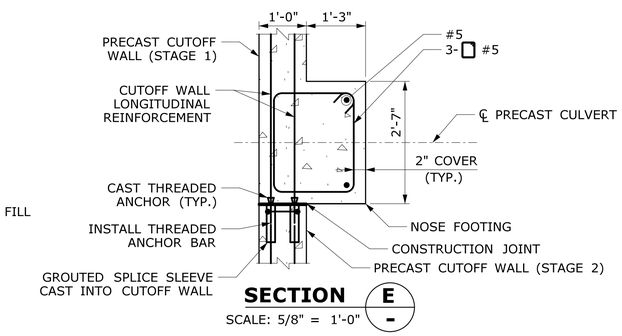

SECTION E
SCALE: 5/8" = 1'-0"

NOSE DETAIL

SCALE: AS NOTED

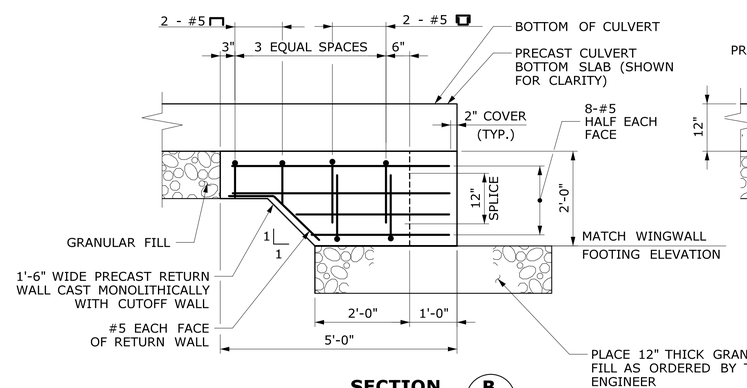

SECTION B
SCALE: 5/8" = 1'-0"

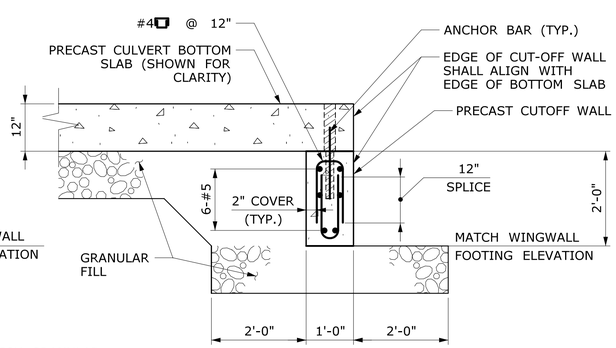

SECTION C
SCALE: 5/8" = 1'-0"

CUTOFF WALL AND RETURN WALL DETAIL

SCALE: AS NOTED

REV.	DATE	REVISION DESCRIPTION	SHEET NO.
-	-	-	-
-	-	-	-
-	-	-	-
-	-	-	-
-	-	-	-
-	-	-	-

THE INFORMATION, INCLUDING ESTIMATED QUANTITIES OF WORK, SHOWN ON THESE SHEETS IS BASED ON LIMITED INVESTIGATIONS BY THE STATE AND IS IN NO WAY WARRANTED TO INDICATE THE CONDITIONS OF ACTUAL QUANTITIES OF WORK WHICH WILL BE REQUIRED.

PLOTTED: 7/25/2018

DESIGNER/DRAFTER: BC/CR
CHECKED BY: RB
SCALE AS NOTED

STATE OF CONNECTICUT
DEPARTMENT OF TRANSPORTATION

FILENAME: ...\SB_MSH_170_3192_MP_21.62_S-009.DGN

LOCHNER
H.W. LOCHNER, INC
55 Hartland St
East Hartford, CT 06108

APPROVED BY: R. BRAY
DATE: 12/06/17

STATE OF CONNECTICUT RICHARD A. BRAY LICENSED PROFESSIONAL ENGINEER

PROJECT TITLE:
BRIDGE NO. 09204R HOUSATONIC RAILROAD MP 21.62 OVER WOMENSHENUK BROOK

TOWN: **KENT**

DRAWING TITLE: **CULVERT DETAILS**

PROJECT NO. **170-3192**
DRAWING NO. **S2-9**
SHEET NO. **03.02.10**

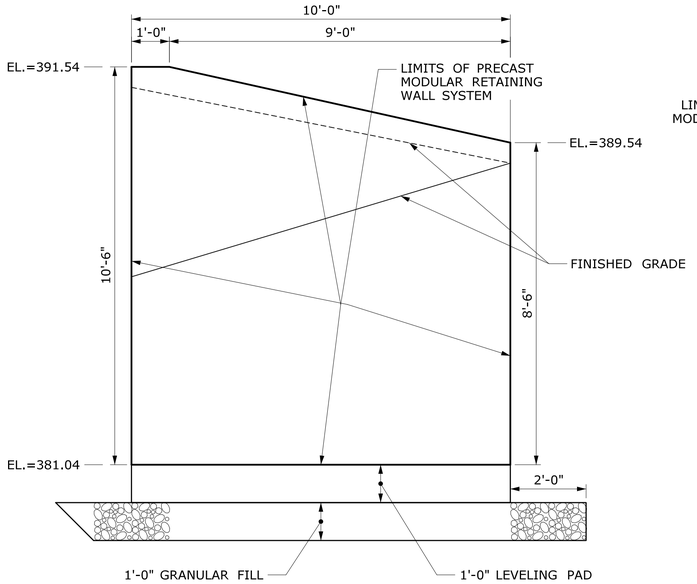

WINGWALL 1A ELEVATION
SCALE: ½" = 1'-0"

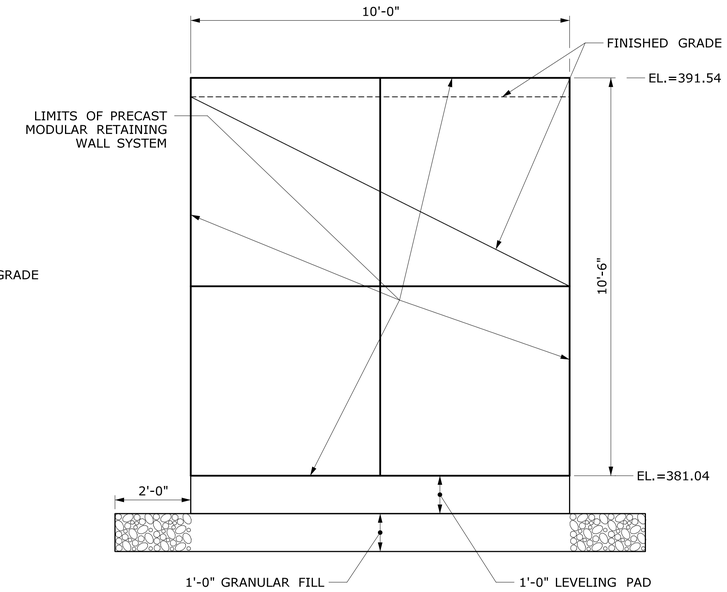

WINGWALL 2A ELEVATION
SCALE: ½" = 1'-0"

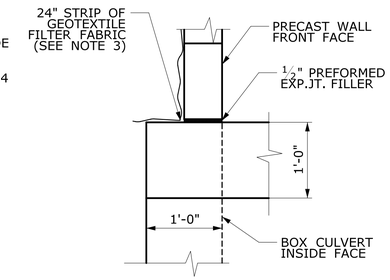

JOINT DETAIL A S2-8
SCALE: 1" = 1

NOTE:
PRECAST HEADWALL, AND WINGWALL CAPS NOT SHOWN FOR CLARIFY.

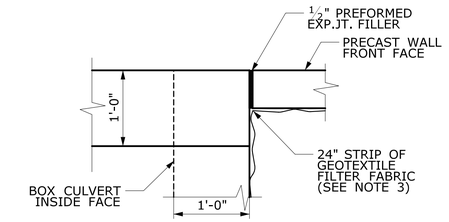

JOINT DETAIL D S2-8
SCALE: 1" = 1

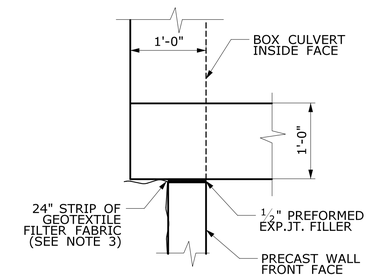

JOINT DETAIL B S2-8
SCALE: 1" = 1

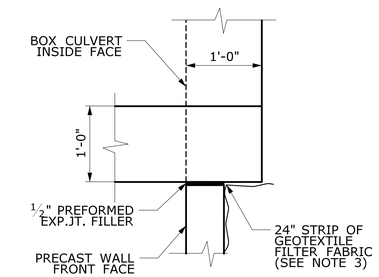

JOINT DETAIL C S2-8
SCALE: 1" = 1

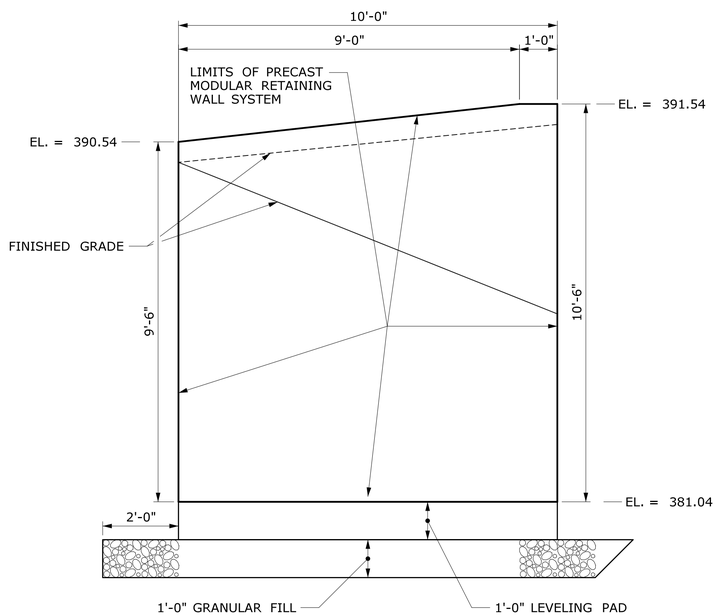

WINGWALL 1B ELEVATION
SCALE: ½" = 1'-0"

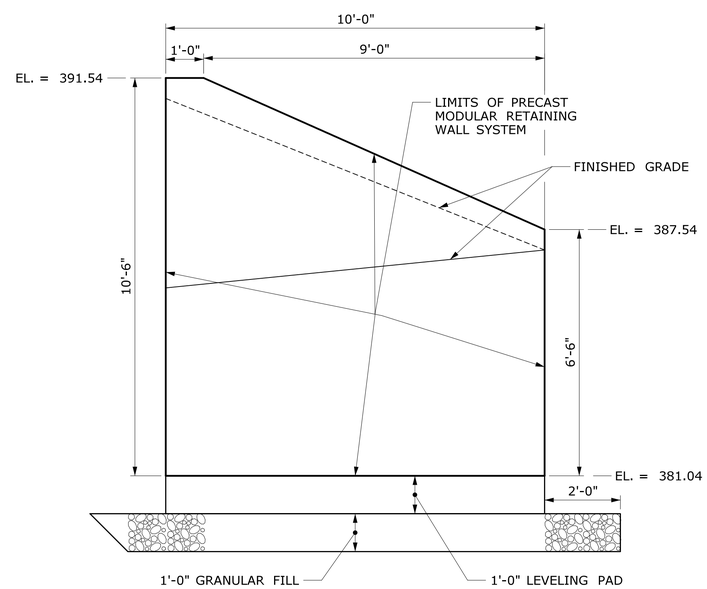

WINGWALL 2B ELEVATION
SCALE: ½" = 1'-0"

MODULAR WALL SYSTEM NOTES

1. THE CONTRACTOR SHALL SELECT, DESIGN AND CONSTRUCT ONE OF THE FOLLOWING WALL SYSTEMS IN ACCORDANCE WITH THE SPECIAL PROVISION "RETAINING WALL (SITE NO. 2)".

DOUBLEWAL-STANDARD MODULE DOUBLEWAL 173 CHURCH STREET YALESVILLE, CT 06492 (203) 269-3119	T-WALL RETAINING WALL SYSTEM THE NEEL COMPANY 8328-D TRAFORD LANE SPRINGFIELD, VA 22152 (703) 913-7858

2. THE MAXIMUM ALLOWABLE BEARING PRESSURE = 2.25 TSF
3. FURNISHING AND INSTALLATION OF GEOTEXTILE FILTER FABRIC SHALL BE INCLUDED IN THE ITEM "RETAINING WALL (SITE NO. 2)".
4. FOR ADDITIONAL WINGWALL SECTION NOTES SEE DRAWING "WINGWALL DETAILS".

REV.	DATE	REVISION DESCRIPTION	SHEET NO.
-	-	-	-
-	-	-	-
-	-	-	-
-	-	-	-
-	-	-	-
-	-	-	-

THE INFORMATION, INCLUDING ESTIMATED QUANTITIES OF WORK, SHOWN ON THESE SHEETS IS BASED ON LIMITED INVESTIGATIONS BY THE STATE AND IS IN NO WAY WARRANTED TO INDICATE THE CONDITIONS OF ACTUAL QUANTITIES OF WORK WHICH WILL BE REQUIRED.

PLOTTED: 7/25/2018

DESIGNER/DRAFTER: BC/CR
CHECKED BY: RB
SCALE AS NOTED

STATE OF CONNECTICUT
DEPARTMENT OF TRANSPORTATION

FILENAME: ...\SB_MSH_170_3192_MP_21.62_S-010.DGN

LOCHNER
H.W. LOCHNER, INC
55 Hartland St
East Hartford, CT 06108

APPROVED BY: R. BRAY
DATE: 12/06/17

STATE OF CONNECTICUT RICHARD A. BRAY LICENSED PROFESSIONAL ENGINEER

PROJECT TITLE:
BRIDGE NO. 09204R HOUSATONIC RAILROAD MP 21.62 OVER WOMENSHENUK BROOK

TOWN: **KENT**

DRAWING TITLE: **WINGWALL ELEVATIONS**

PROJECT NO. **170-3192**
DRAWING NO. **S2-10**
SHEET NO. **03.02.11**

WINGWALL SECTION NOTES:

1. WALL DESIGN HEIGHT "H" FOR PROPRIETARY WALL SECTIONS SHALL BE MEASURED FROM THE TOP OF SLOPE TO THE TOP OF LEVELING PAD.
2. COST OF PRECAST LEVELING PAD SHALL BE INCLUDED IN THE LUMP SUM COST OF "RETAINING WALL (SITE NO. 2)."
3. DETAILS SHOWN ON THIS SHEET ARE NOT SPECIFIC. THE CONTRACTOR SHALL MODIFY THE SECTIONS AND DETAILS TO CONFORM TO SPECIFIC SITE REQUIREMENTS.
4. ANY ADDITIONAL PERVIOUS STRUCTURE BACKFILL REQUIRED FOR THIS WALL OUTSIDE THE PAY LIMITS SHOWN ON THIS SHEET SHALL BE INCLUDED IN THE LUMP SUM COST OF "RETAINING WALL (SITE NO. 2)".
5. WHERE A REINFORCED CONCRETE FOOTING IS PROVIDED UNDER THE FRONT OF THE MODULE, THE EMBEDMENT DEPTH SHALL BE MEASURED TO THE BOTTOM OF THE FOOTING.
6. THE PROPRIETARY WALL SHALL HAVE NO OBSTRUCTIONS, SUCH AS STEMS, WITHIN THE LIMITS SHOWN. VERTICAL LIMITS ARE MEASURED FROM THE BOTTOM OF TIE.
7. FOR ADDITIONAL MODULAR WALL SYSTEM NOTES, SEE DRAWING "WINGWALL ELEVATIONS".

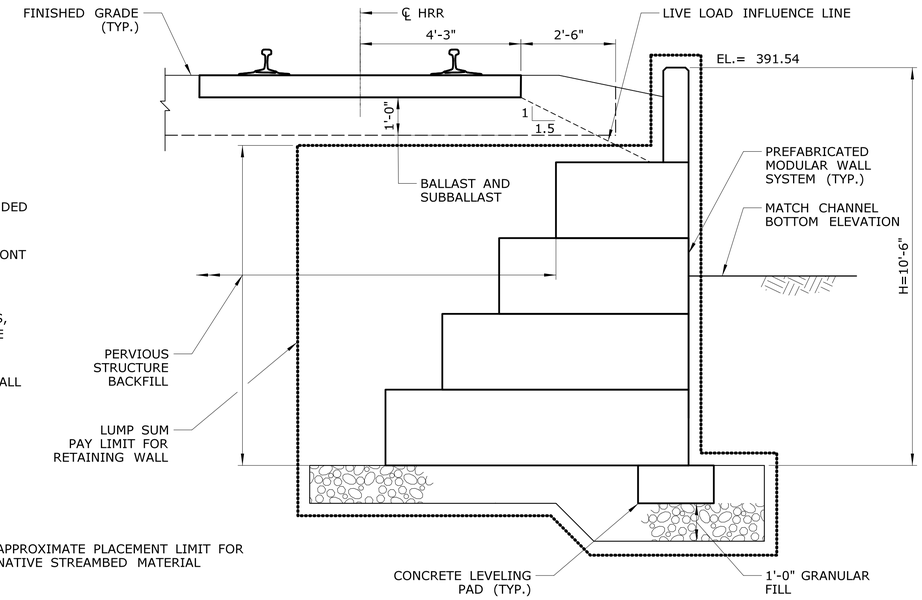

SECTION C / S2-8
SCALE: 1/2" = 1'-0"

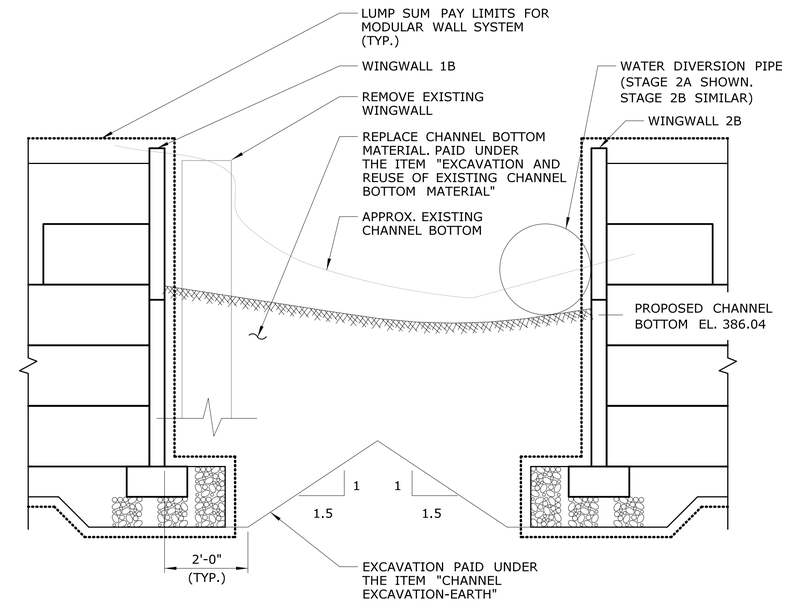

SECTION A / -
NOT TO SCALE
(PROPOSED CULVERT NOT SHOWN)

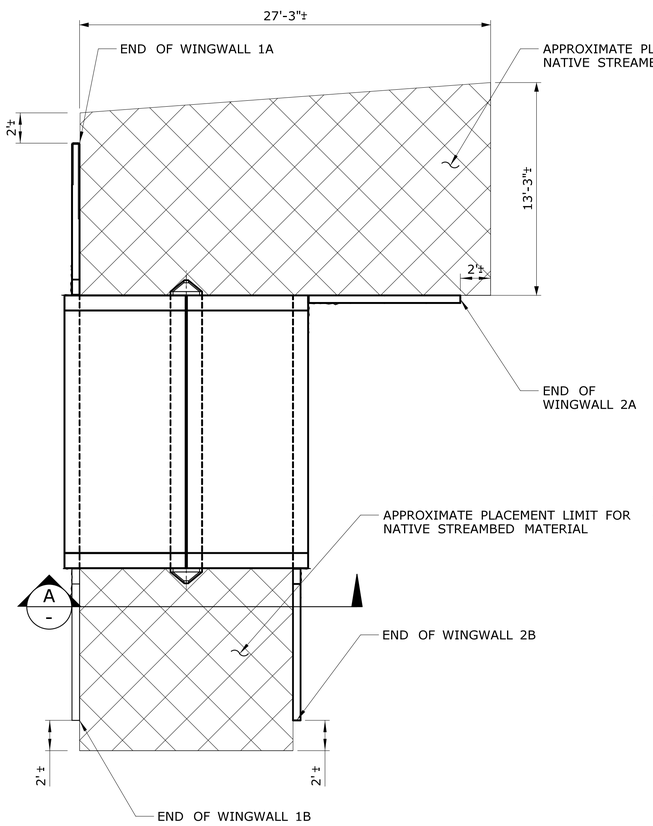

CHANNEL BOTTOM MATERIAL LIMITS
SCALE: 1"=50'

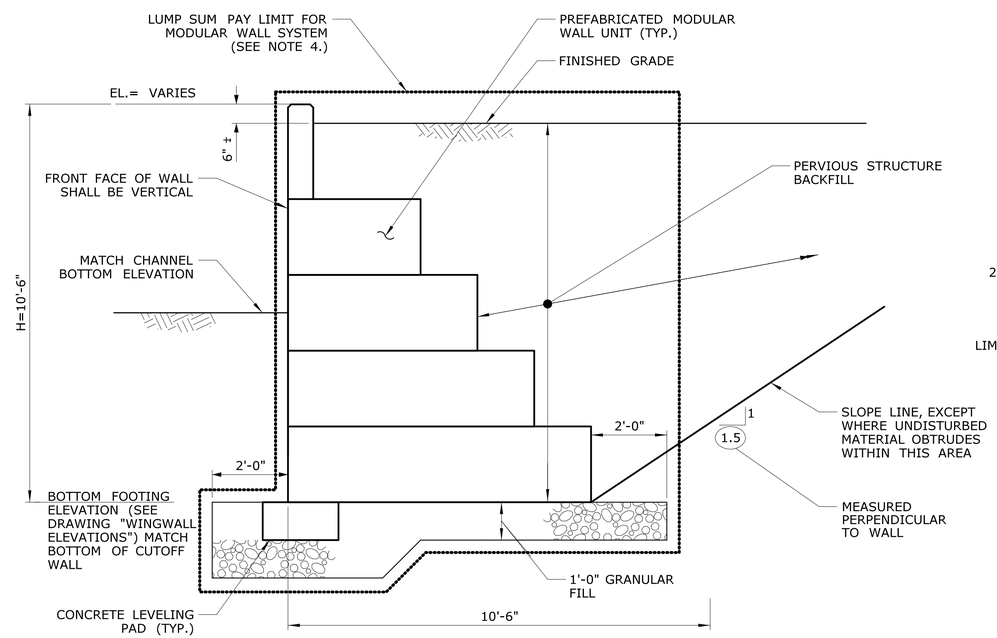

TYPICAL WINGWALL SECTION
SCALE: 1/2" = 1'-0"

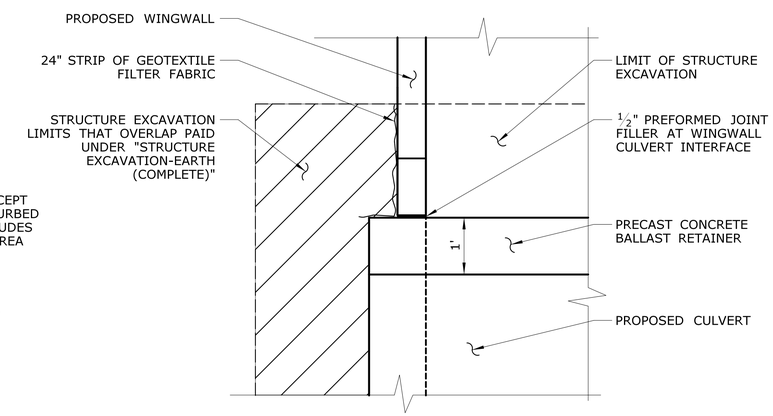

WINGWALL CULVERT INTERFACE DETAIL
SCALE: 3/4" = 1'

REV.	DATE	REVISION DESCRIPTION	SHEET NO.
-	-	-	-
-	-	-	-
-	-	-	-
-	-	-	-
-	-	-	-
-	-	-	-

THE INFORMATION, INCLUDING ESTIMATED QUANTITIES OF WORK, SHOWN ON THESE SHEETS IS BASED ON LIMITED INVESTIGATIONS BY THE STATE AND IS IN NO WAY WARRANTED TO INDICATE THE CONDITIONS OF ACTUAL QUANTITIES OF WORK WHICH WILL BE REQUIRED.

PLOTTED: 7/25/2018

DESIGNER/DRAFTER: BC/CR
CHECKED BY: RB
SCALE AS NOTED

STATE OF CONNECTICUT
DEPARTMENT OF TRANSPORTATION

FILENAME: ...\SB_MSH_170_3192_MP_21.62_S-011.DGN

LOCHNER
H.W. LOCHNER, INC
55 Hartland St
East Hartford, CT 06108

APPROVED BY: R. BRAY DATE: 12/06/17

STATE OF CONNECTICUT RICHARD A. BRAY LICENSED PROFESSIONAL ENGINEER

PROJECT TITLE: BRIDGE NO. 09204R HOUSATONIC RAILROAD MP 21.62 OVER WOMENSHENUK BROOK

TOWN: KENT

DRAWING TITLE: WINGWALL DETAILS

PROJECT NO. 170-3192
DRAWING NO. S2-11
SHEET NO. 03.02.12

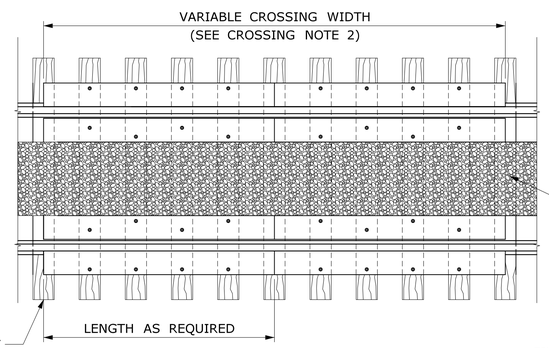

TEMPORARY TRACK ACCESS
NTS

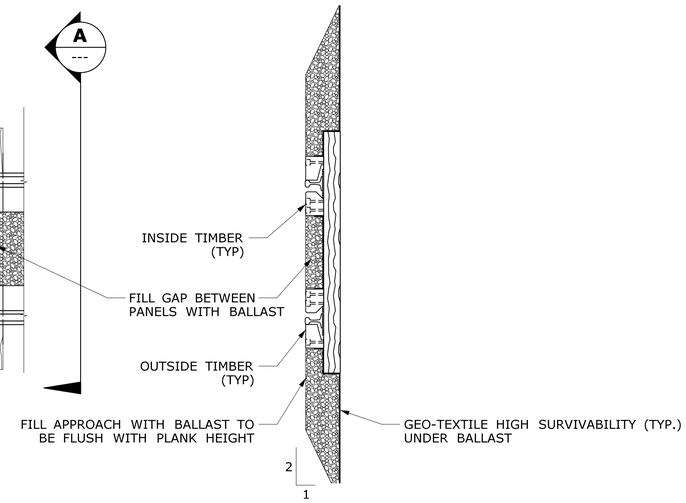

SECTION A ---
NTS

CROSSING NOTES:

1. THE TRACK ACCESS DETAIL SHALL BE THE RESPONSIBILITY OF HRR.
2. TEMPORARY CROSSING SHALL BE CONSTRUCTED WITH MINIMUM LENGTH REQUIRED FOR EQUIPMENT TO ACCESS THE TRACK WITHOUT DAMAGING THE RAILS

REV.	DATE	REVISION DESCRIPTION	SHEET NO.
-	-	-	-
-	-	-	-
-	-	-	-
-	-	-	-
-	-	-	-
-	-	-	-

THE INFORMATION, INCLUDING ESTIMATED QUANTITIES OF WORK, SHOWN ON THESE SHEETS IS BASED ON LIMITED INVESTIGATIONS BY THE STATE AND IS IN NO WAY WARRANTED TO INDICATE THE CONDITIONS OF ACTUAL QUANTITIES OF WORK WHICH WILL BE REQUIRED.

PLOTTED: 7/25/2018

DESIGNER/DRAFTER: BC/CR
CHECKED BY: RB
SCALE AS NOTED

STATE OF CONNECTICUT
DEPARTMENT OF TRANSPORTATION

FILENAME: ...\SB_MSH_170_3192_MP_21.62_S-012.DGN

LOCHNER
H.W. LOCHNER, INC
55 Hartland St
East Hartford, CT 06108

APPROVED BY: R. BRAY DATE: 12/06/17

STATE OF CONNECTICUT RICHARD A. BRAY LICENSED PROFESSIONAL ENGINEER

PROJECT TITLE:
BRIDGE NO. 09204R HOUSATONIC RAILROAD MP 21.62 OVER WOMENSHENUK BROOK

TOWN: **KENT**

DRAWING TITLE: **MISCELLANEOUS DETAILS**

PROJECT NO. **170-3192**
DRAWING NO. **S2-12**
SHEET NO. **03.02.13**