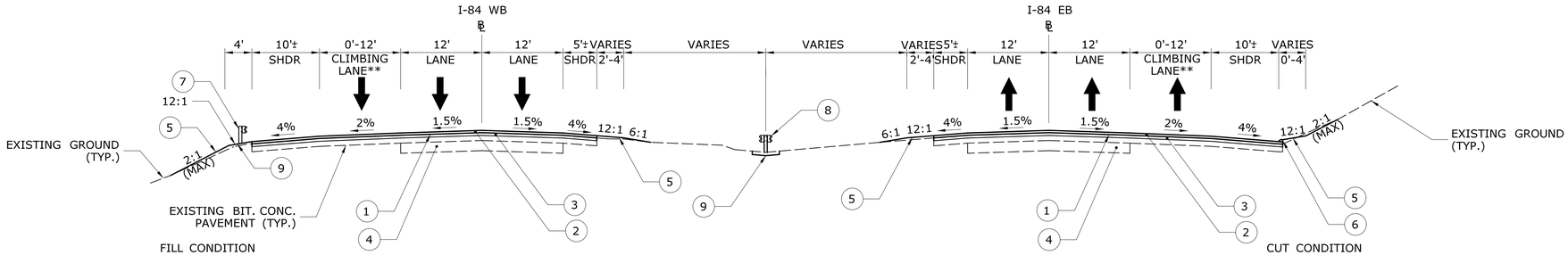

WB 99+00 TO WB 106+20
WB 123+45 TO WB 132+30
WB 145+20 TO WB 159+30
WB 172+80 TO WB 178+20
WB 200+20 TO WB 204+25
WB 232+00 TO WB 249+10
WB 257+70 TO WB 294+90

EB 96+00 TO EB 106+20
EB 123+10 TO EB 133+80
EB 148+50 TO EB 156+50
EB 178+00 TO EB 178+30
EB 198+00 TO EB 204+90
EB 233+00 TO EB 248+10
EB 256+50 TO EB 297+00
EB 307+50 TO EB 310+00

I-84 NORMAL SECTION

SCALE: N.T.S.

**EB 118+90 TO 148+35
WB 180+40 TO 232+40

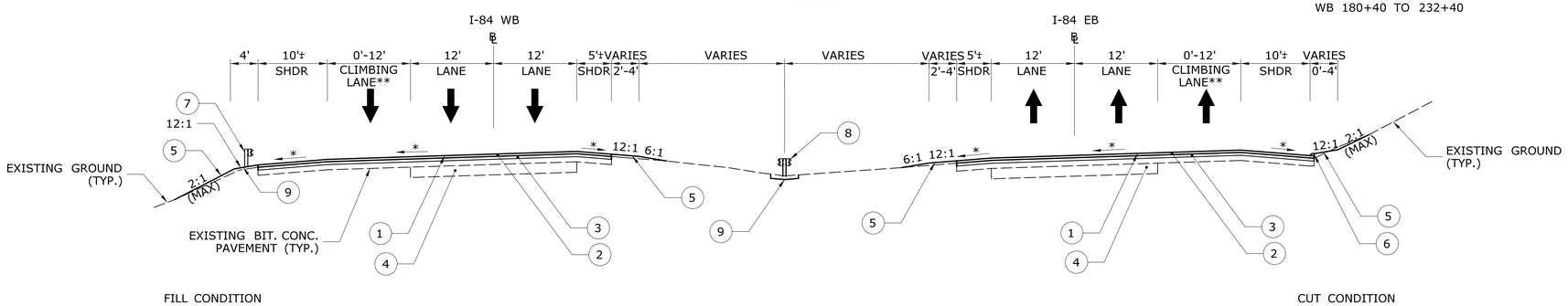

WB 106+20 TO WB 123+45
WB 132+30 TO WB 145+20
WB 159+30 TO WB 172+80
WB 178+20 TO WB 200+20
WB 204+25 TO WB 232+00
WB 249+10 TO WB 257+70
WB 294+90 TO WB 301+00

EB 106+20 TO EB 123+10
EB 133+80 TO EB 148+50
EB 156+50 TO EB 178+00
EB 178+30 TO EB 198+00
EB 204+90 TO EB 233+00
EB 248+10 TO EB 256+50
EB 297+00 TO EB 307+50

I-84 SUPERELEVATED SECTION

SCALE: N.T.S.

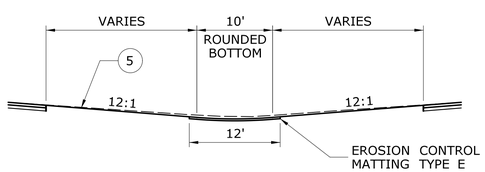

MEDIAN GRADING 1

SCALE: N.T.S.
EB 106+00 TO EB 110+00
EB 135+90 TO EB 136+60
EB 194+75 TO EB 206+40

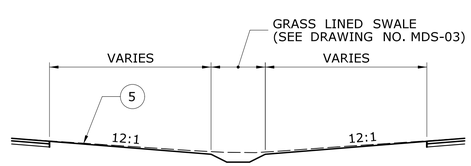

MEDIAN GRADING 2

SCALE: N.T.S.
EB 110+00 TO EB 135+90

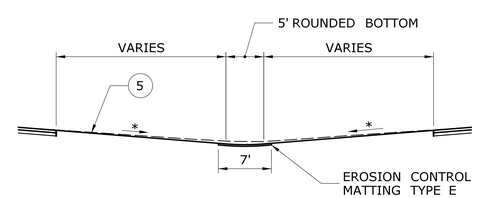

MEDIAN GRADING 3

SCALE: N.T.S.
EB 294+90 TO EB 305+20

GENERAL NOTES

1. MATERIAL FOR TACK COAT SHALL BE APPLIED PER SECTION 4.06 OF FORM 817.
2. EXISTING REINFORCED CONCRETE PAVEMENT LOCATION IS APPROXIMATE AND SHOWN FOR REFERENCE ONLY
3. SEVEN FOOT LONG STEEL POSTS SHALL BE INSTALLED WHEN METAL BEAM RAIL IS PROPOSED AND THE DISTANCE FROM THE EDGE OF PAVEMENT TO THE OUTER LIMIT OF THE 12:1 SNOW SHELF IS LESS THAN 4'.
4. ANY MILLED SURFACE, OR PORTION THEREOF, THAT IS EXPOSED TO TRAFFIC SHALL BE PAVED WITHIN FIFTEEN (15) CALENDAR DAYS.
5. PROPOSED EDGE OF PAVEMENT IS TO MATCH THE EXISTING EDGE OF PAVEMENT UNLESS OTHERWISE NOTED.

DESIGNED BY:
BL COMPANIES

BL Companies
BL COMPANIES, INC.
355 RESEARCH PARKWAY
MERIDEN, CT 06450

STATE OF CONNECTICUT
MICHAEL G. FISHER
No. 21170
LICENSED
PROFESSIONAL ENGINEER

Digitally signed by Michael G. Fisher
Date: 2018.10.11 08:38:04-04'00'

LEGEND

1. MILL 2.5" TO 4.0" OF HMA △1
2. 2" PMA S0.5 TRAFFIC LEVEL 3
3. 2.5" PMA S0.5 TRAFFIC LEVEL 3
4. 9" EXIST. REINFORCED CONCRETE PAVEMENT (APPROXIMATE LOCATION)
5. 4" TOP SOIL & TURF ESTABLISHMENT
6. BITUMINOUS CONCRETE PARK CURBING
7. METAL BEAM RAIL (TYPE R-B MASH) (SEE ROADWAY PLANS FOR LOCATIONS)
8. METAL BEAM RAIL (TYPE MD-B MASH) (SEE ROADWAY PLANS FOR LOCATIONS)
9. 6" PROCESSED AGGREGATE (WHERE GUIDERAIL IS INSTALLED)
10. MILL 3" OF HMA
11. 2" PMA S0.5 TRAFFIC LEVEL 3
12. 1" HMA S0.25 TRAFFIC LEVEL 2
13. 4" PMA S0.5 TRAFFIC LEVEL 3 IN TWO EQUAL LIFTS
14. 4" HMA S1.0 TRAFFIC LEVEL 3
15. 12" SUBBASE
16. HMA S0.25 TRAFFIC LEVEL 2 WEDGE COURSE. (MAX. LIFT = 1.5") △1 △2
17. CUT BITUMINOUS CONCRETE PAVEMENT
18. SAWING AND SEALING JOINTS IN BITUMINOUS CONCRETE PAVEMENT

* SLOPE VARIES (SEE CROSS-SECTIONS)

ADDENDUM NO. 3

REV.	DATE	REVISION DESCRIPTION	SHEET NO.
△1	09/13/18	LEGEND MODIFIED	03.04.A1
△2	10/10/18	LEGEND MODIFIED	03.04.A3

Plotted Date: 10/10/2018

DESIGNER/DRAFTER: **SF/JE**
CHECKED BY: **MF**
SCALE AS NOTED

STATE OF CONNECTICUT
DEPARTMENT OF TRANSPORTATION

Filename: ...\HW_MSH_0096_0200_TYP-1_A3.dgn

SIGNATURE/BLOCK:
BL Companies
BL COMPANIES, INC.
355 RESEARCH PARKWAY
MERIDEN, CT 06450

PROJECT TITLE:
I-84 RESURFACING, BRIDGE REHABILITATION, AND SAFETY IMPROVEMENTS

TOWN: **NEWTOWN**

DRAWING TITLE: **TYPICAL SECTIONS**

PROJECT NO. **96-200**
DRAWING NO. **TYP-01**
SHEET NO. **03.04.A3**

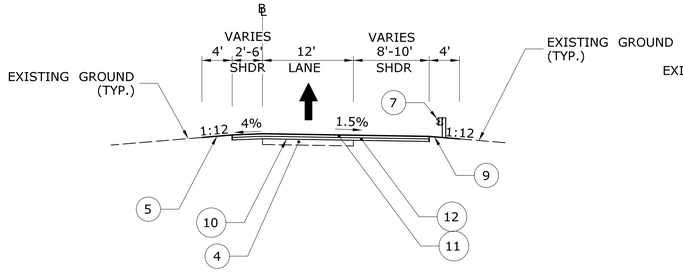

RAMPS A, C, D, G, H & K NORMAL SECTION

SCALE: N.T.S.

D 20+30 TO D 21+70
G 79+90 TO G 80+50
H 82+00 TO G 88+50
K 82+23 TO K 84+00

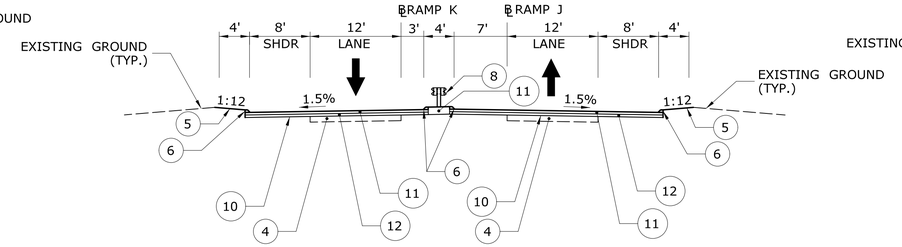

ABUTTING RAMPS J & K NORMAL SECTION

SCALE: N.T.S.

J 95+27 TO J 95+92
K 84+00 TO K 84+47

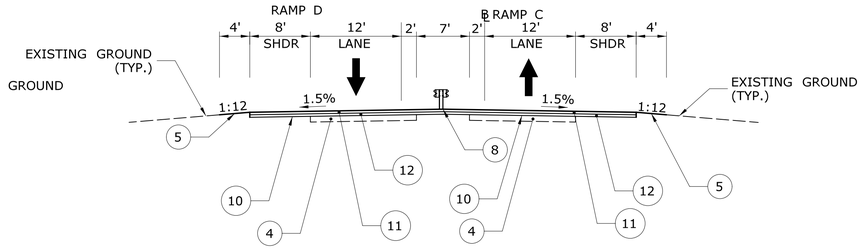

ABUTTING RAMPS C & D NORMAL SECTION

SCALE: N.T.S.

C 22+90 TO C 26+80

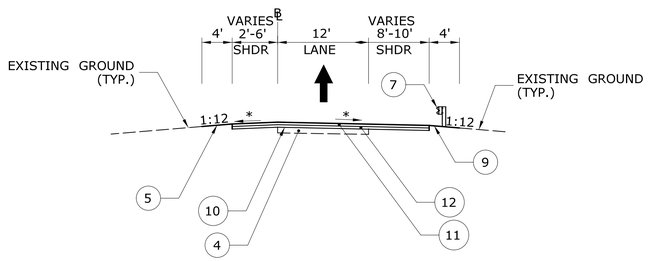

RAMPS A, C, D, G, H & K SUPERELEVATED SECTION

SCALE: N.T.S.

A 10+50 TO A 15+70
C 12+00 TO C 21+97.57
D 16+00 TO D 20+30
D 21+70 TO D 27+52.31
G 74+52 TO G 79+90
H 88+50 TO H 96+00
K 86+50 TO K 97+50

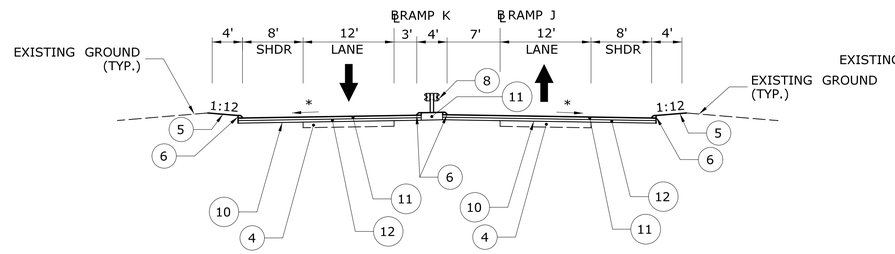

ABUTTING RAMPS J & K SUPERELEVATED SECTION

SCALE: N.T.S.

J 93+50 TO J 95+27
K 84+47 TO K 86+50

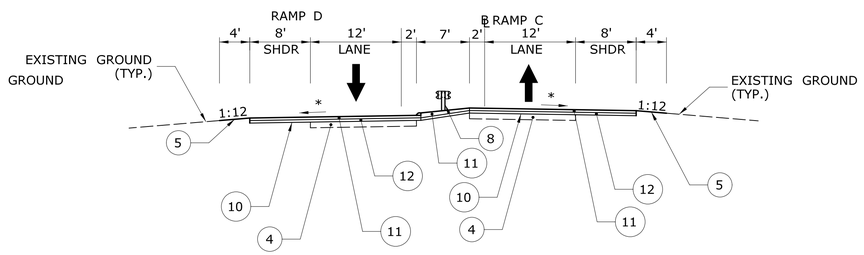

ABUTTING RAMPS C & D SUPERELEVATED SECTION

SCALE: N.T.S.

C 21+97.57 TO C 22+90

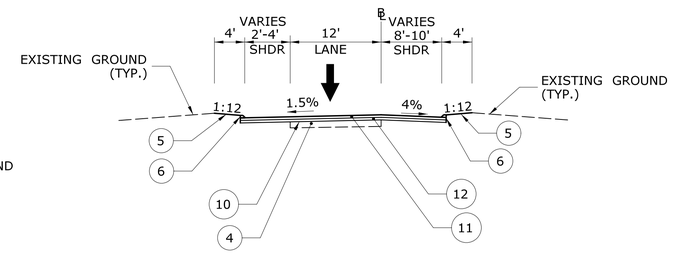

RAMPS B & J NORMAL SECTION

SCALE: N.T.S.

B 13+80 TO B 15+00
J 85+50 TO J 87+60
J 95+92 TO J 96+70

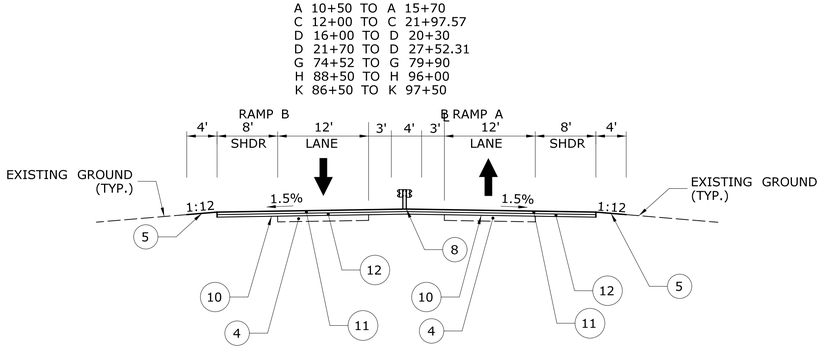

ABUTTING RAMPS A & B NORMAL SECTION

SCALE: N.T.S.

A 19+05 TO A 23+50
B 19+30 TO B 19+62.57

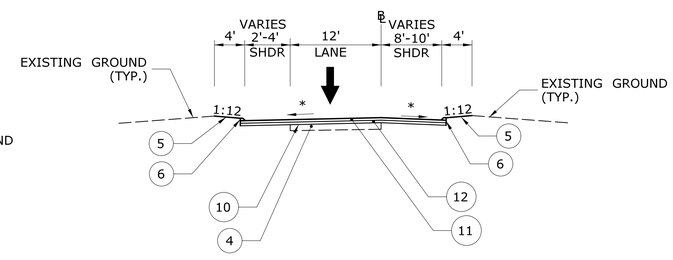

RAMPS B & J SUPERELEVATED SECTION

SCALE: N.T.S.

B 6+84.5 TO B 13+80
B 15+00 TO B 15+70
J 87+60 TO J 93+50
J 96+70 TO J 99+17

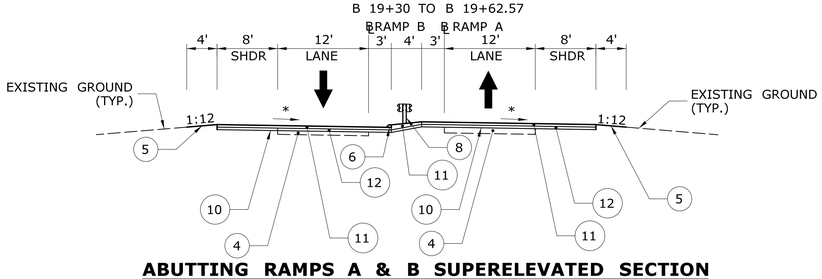

ABUTTING RAMPS A & B SUPERELEVATED SECTION

SCALE: N.T.S.

A 15+70 TO A 19+05
B 15+70 TO B 19+30

LEGEND

1. MILL 2.5" TO 4.0" OF HMA △1
2. 2" PMA S0.5 TRAFFIC LEVEL 3
3. 2.5" PMA S0.5 TRAFFIC LEVEL 3
4. 9" EXIST. REINFORCED CONCRETE PAVEMENT (APPROXIMATE LOCATION)
5. 4" TOP SOIL & TURF ESTABLISHMENT
6. BITUMINOUS CONCRETE PARK CURBING
7. METAL BEAM RAIL (TYPE R-B MASH) (SEE ROADWAY PLANS FOR LOCATIONS)
8. METAL BEAM RAIL (TYPE MD-B MASH) (SEE ROADWAY PLANS FOR LOCATIONS)
9. 6" PROCESSED AGGREGATE (WHERE GUIDERAIL IS INSTALLED)
10. MILL 3" OF HMA
11. 2" PMA S0.5 TRAFFIC LEVEL 3
12. 1" HMA S0.25 TRAFFIC LEVEL 2
13. 4" PMA S0.5 TRAFFIC LEVEL 3 IN TWO EQUAL LIFTS
14. 4" HMA S1.0 TRAFFIC LEVEL 3
15. 12" SUBBASE
16. HMA S0.25 TRAFFIC LEVEL 2 WEDGE COURSE. (MAX. LIFT = 1.5") △2
17. CUT BITUMINOUS CONCRETE PAVEMENT
18. SAWING AND SEALING JOINTS IN BITUMINOUS CONCRETE PAVEMENT

* SLOPE VARIES (SEE CROSS-SECTIONS)

ADDENDUM NO. 3

REV.	DATE	REVISION DESCRIPTION	SHEET NO.
△1	09/13/18	LEGEND MODIFIED	03.05.A1
△2	10/10/18	LEGEND MODIFIED	03.05.A3

Plotted Date: 10/10/2018

DESIGNER/DRAFTER: SF/JE
CHECKED BY: MF
SCALE AS NOTED

STATE OF CONNECTICUT
DEPARTMENT OF TRANSPORTATION

Filename: ...\HW_MSH_0096_0200_TYP-2_A3.dgn

SIGNATURE/BLOCK:
BL Companies
BL COMPANIES, INC.
355 RESEARCH PARKWAY
MERIDEN, CT 06450

PROJECT TITLE:
I-84 RESURFACING, BRIDGE REHABILITATION, AND SAFETY IMPROVEMENTS

TOWN: NEWTOWN

DRAWING TITLE: TYPICAL SECTIONS

PROJECT NO. 96-200
DRAWING NO. TYP-02
SHEET NO. 03.05.A3

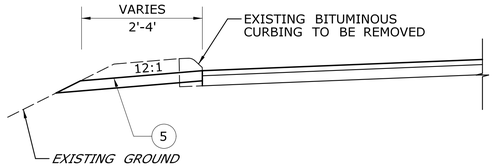

TYPICAL GRADING FOR REMOVAL OF EXISTING CURBING

SCALE: N.T.S.

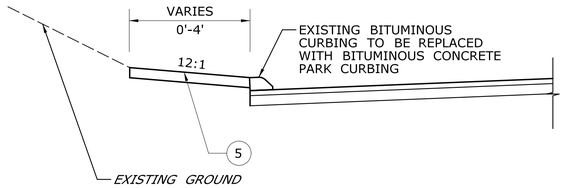

TYPICAL GRADING FOR REPLACEMENT OF EXISTING CURBING

SCALE: N.T.S.

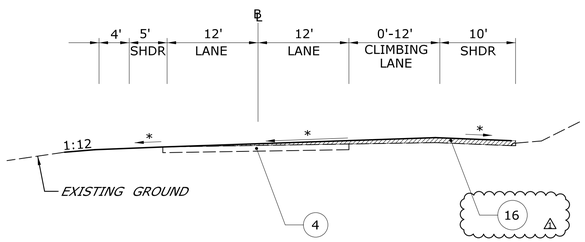

TYPICAL DETAIL OF WEDGE COURSE

SCALE: N.T.S.

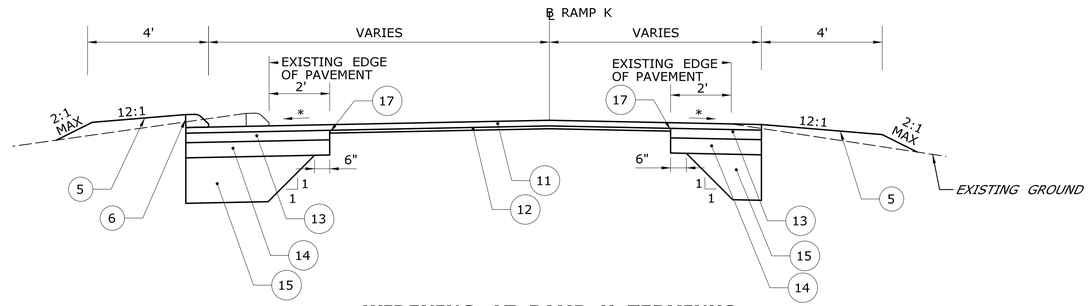

WIDENING AT RAMP K TERMINUS

SCALE: N.T.S.

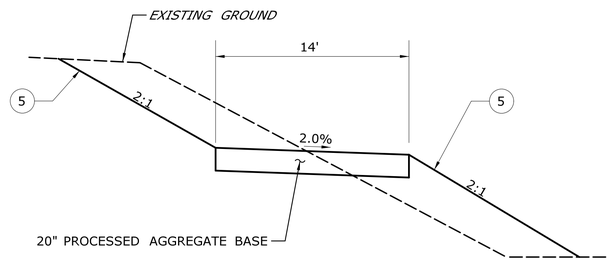

ACCESS ROAD TYPICAL SECTION

SCALE: N.T.S.
CULVERT SITE 1 - EB
CULVERT SITE 2 - EB
CULVERT SITE 3 - EB
CULVERT SITE 4 - EB

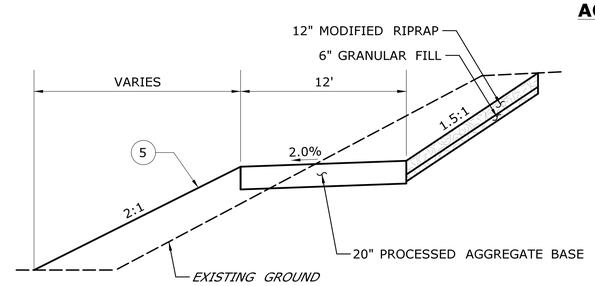

ACCESS ROAD TYPICAL SECTION

SCALE: N.T.S.
CULVERT SITE 2 - WB

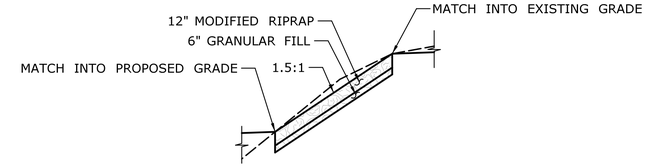

MODIFIED RIPRAP PROTECTED SLOPE

SCALE: N.T.S.

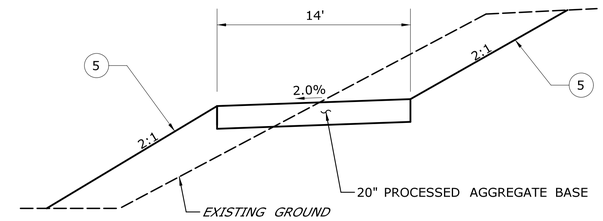

ACCESS ROAD TYPICAL SECTION

SCALE: N.T.S.
CULVERT SITE 1 - WB
CULVERT SITE 3 - WB
CULVERT SITE 4 - WB

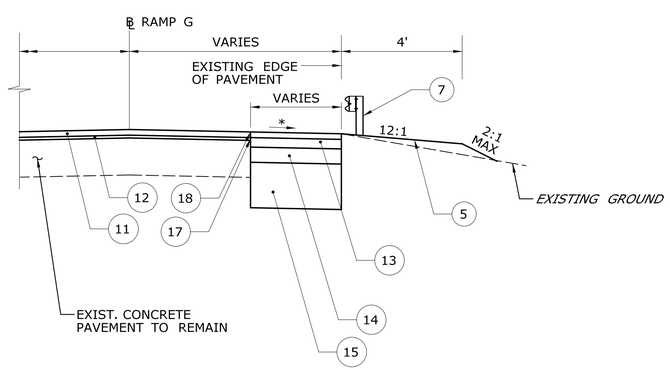

FULL DEPTH RECONSTRUCTION AT RAMP G TERMINUS

SCALE: N.T.S.

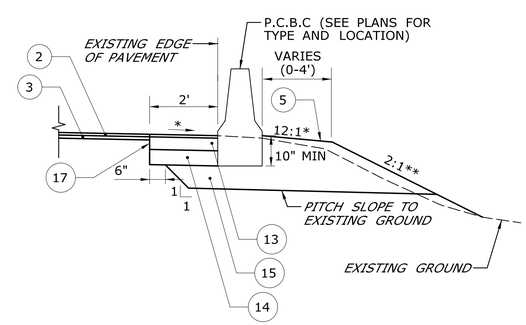

*POSITIVE SLOPE IN CUT CONDITIONS VARIES.

**1.5:1 IN RESTRICTED AREAS. SEE RIPRAP SLOPE DETAIL THIS SHEET.

FULL DEPTH RECONSTRUCTION AT P.C.B.C - 1

SCALE: N.T.S.

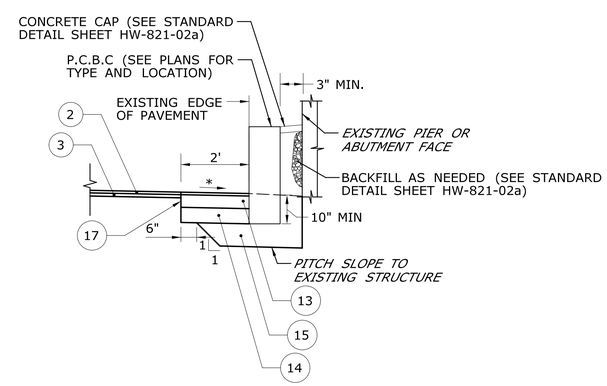

FULL DEPTH RECONSTRUCTION AT P.C.B.C - 2

SCALE: N.T.S.

LEGEND

1. MILL 2.5" TO 4.0" OF HMA △1
2. 2" PMA S0.5 TRAFFIC LEVEL 3
3. 2.5" PMA S0.5 TRAFFIC LEVEL 3
4. 9" EXIST. REINFORCED CONCRETE PAVEMENT (APPROXIMATE LOCATION)
5. 4" TOP SOIL & TURF ESTABLISHMENT
6. BITUMINOUS CONCRETE PARK CURBING
7. METAL BEAM RAIL (TYPE R-B MASH) (SEE ROADWAY PLANS FOR LOCATIONS)
8. METAL BEAM RAIL (TYPE MD-B MASH) (SEE ROADWAY PLANS FOR LOCATIONS)
9. 6" PROCESSED AGGREGATE (WHERE GUIDERAIL IS INSTALLED)
10. MILL 3" OF HMA
11. 2" PMA S0.5 TRAFFIC LEVEL 3
12. 1" HMA S0.25 TRAFFIC LEVEL 2
13. 4" PMA S0.5 TRAFFIC LEVEL 3 IN TWO EQUAL LIFTS
14. 4" HMA S1.0 TRAFFIC LEVEL 3
15. 12" SUBBASE
16. HMA S0.25 TRAFFIC LEVEL 2 WEDGE COURSE. (MAX. LIFT = 1.5") △1 △2
17. CUT BITUMINOUS CONCRETE PAVEMENT
18. SAWING AND SEALING JOINTS IN BITUMINOUS CONCRETE PAVEMENT

* SLOPE VARIES (SEE CROSS-SECTIONS)

ADDENDUM NO. 3

REV.	DATE	REVISION DESCRIPTION	SHEET NO.
△1	09/13/18	LEGEND AND DETAIL MODIFIED	03.06.A1
△2	10/10/18	LEGEND MODIFIED	03.06.A3

THE INFORMATION, INCLUDING ESTIMATED QUANTITIES OF WORK, SHOWN ON THESE SHEETS IS BASED ON LIMITED INVESTIGATIONS BY THE STATE AND IS IN NO WAY WARRANTED TO INDICATE THE CONDITIONS OF ACTUAL QUANTITIES OF WORK WHICH WILL BE REQUIRED.

Plotted Date: 10/10/2018

DESIGNER/DRAFTER: SF/JE
CHECKED BY: MF
SCALE AS NOTED

STATE OF CONNECTICUT
DEPARTMENT OF TRANSPORTATION

Filename: ...\HW_MSH_0096_0200_TYP-3_A3.dgn

SIGNATURE/BLOCK:
BL COMPANIES, INC.
355 RESEARCH PARKWAY
MERIDEN, CT 06450

PROJECT TITLE:
I-84 RESURFACING, BRIDGE REHABILITATION, AND SAFETY IMPROVEMENTS

TOWN: **NEWTOWN**

DRAWING TITLE: **TYPICAL SECTIONS**

PROJECT NO. **96-200**
DRAWING NO. **TYP-03**
SHEET NO. **03.06.A3**