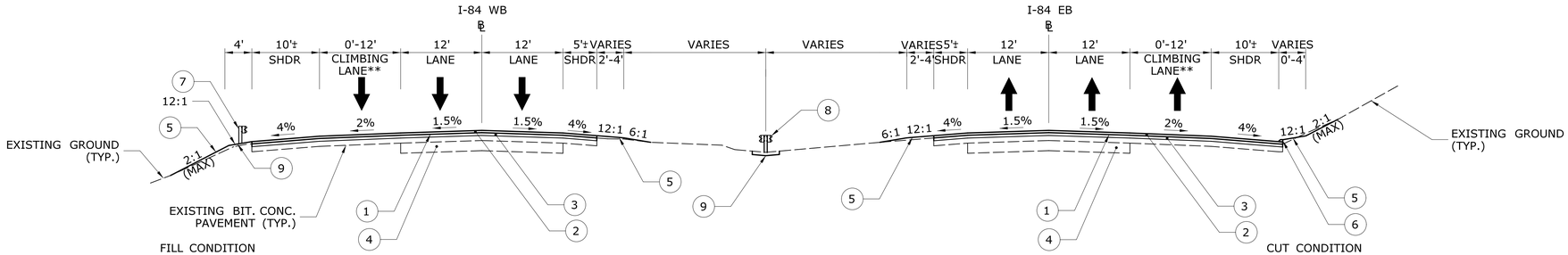

WB 99+00 TO WB 106+20
WB 123+45 TO WB 132+30
WB 145+20 TO WB 159+30
WB 172+80 TO WB 178+20
WB 200+20 TO WB 204+25
WB 232+00 TO WB 249+10
WB 257+70 TO WB 294+90

EB 96+00 TO EB 106+20
EB 123+10 TO EB 133+80
EB 148+50 TO EB 156+50
EB 178+00 TO EB 178+30
EB 198+00 TO EB 204+90
EB 233+00 TO EB 248+10
EB 256+50 TO EB 297+00
EB 307+50 TO EB 310+00

I-84 NORMAL SECTION

SCALE: N.T.S.

**EB 118+90 TO 148+35
WB 180+40 TO 232+40

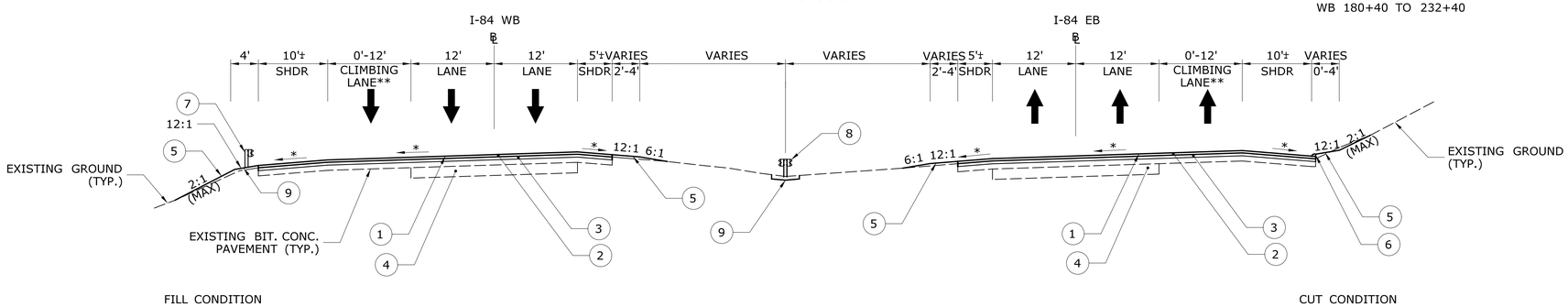

WB 106+20 TO WB 123+45
WB 132+30 TO WB 145+20
WB 159+30 TO WB 172+80
WB 178+20 TO WB 200+20
WB 204+25 TO WB 232+00
WB 249+10 TO WB 257+70
WB 294+90 TO WB 301+00

EB 106+20 TO EB 123+10
EB 133+80 TO EB 148+50
EB 156+50 TO EB 178+00
EB 178+30 TO EB 198+00
EB 204+90 TO EB 233+00
EB 248+10 TO EB 256+50
EB 297+00 TO EB 307+50

I-84 SUPERELEVATED SECTION

SCALE: N.T.S.

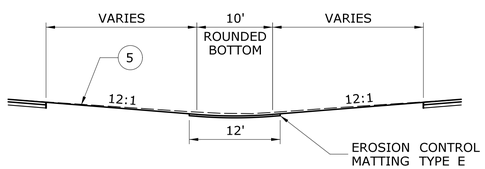

MEDIAN GRADING 1

SCALE: N.T.S.
EB 106+00 TO EB 110+00
EB 135+90 TO EB 136+60
EB 194+75 TO EB 206+40

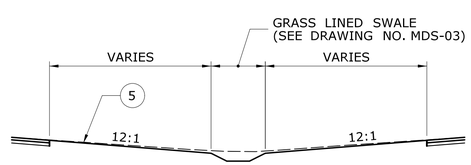

MEDIAN GRADING 2

SCALE: N.T.S.
EB 110+00 TO EB 135+90

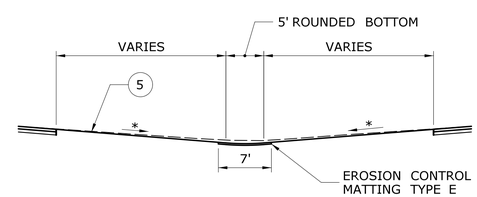

MEDIAN GRADING 3

SCALE: N.T.S.
EB 294+90 TO EB 305+20

GENERAL NOTES

1. MATERIAL FOR TACK COAT SHALL BE APPLIED PER SECTION 4.06 OF FORM 817.
2. EXISTING REINFORCED CONCRETE PAVEMENT LOCATION IS APPROXIMATE AND SHOWN FOR REFERENCE ONLY
3. SEVEN FOOT LONG STEEL POSTS SHALL BE INSTALLED WHEN METAL BEAM RAIL IS PROPOSED AND THE DISTANCE FROM THE EDGE OF PAVEMENT TO THE OUTER LIMIT OF THE 12:1 SNOW SHELF IS LESS THAN 4'.
4. ANY MILLED SURFACE, OR PORTION THEREOF, THAT IS EXPOSED TO TRAFFIC SHALL BE PAVED WITHIN FIFTEEN (15) CALENDAR DAYS.
5. PROPOSED EDGE OF PAVEMENT IS TO MATCH THE EXISTING EDGE OF PAVEMENT UNLESS OTHERWISE NOTED.

DESIGNED BY:
BL COMPANIES

BL Companies
BL COMPANIES, INC.
355 RESEARCH PARKWAY
MERIDEN, CT 06450

STATE OF CONNECTICUT
MICHAEL G. FISHER
No. 21170
LICENSED
PROFESSIONAL ENGINEER

Digitally signed by Michael G. Fisher
Date: 2018.09.21 10:25:36-04'00'

LEGEND

1. MILL 2.5" TO 4.0" OF HMA ⚠
2. 2" PMA S0.5 TRAFFIC LEVEL 3
3. 2.5" PMA S0.5 TRAFFIC LEVEL 3
4. 9" EXIST. REINFORCED CONCRETE PAVEMENT (APPROXIMATE LOCATION)
5. 4" TOP SOIL & TURF ESTABLISHMENT
6. BITUMINOUS CONCRETE PARK CURBING
7. METAL BEAM RAIL (TYPE R-B MASH) (SEE ROADWAY PLANS FOR LOCATIONS)
8. METAL BEAM RAIL (TYPE MD-B MASH) (SEE ROADWAY PLANS FOR LOCATIONS)
9. 6" PROCESSED AGGREGATE (WHERE GUIDERAIL IS INSTALLED)
10. MILL 3" OF HMA
11. 2" PMA S0.5 TRAFFIC LEVEL 3
12. 1" HMA S0.25 TRAFFIC LEVEL 2
13. 4" PMA S0.5 TRAFFIC LEVEL 3 IN TWO EQUAL LIFTS
14. 4" HMA S1.0 TRAFFIC LEVEL 3
15. 12" SUBBASE
16. HMA S0.25 TRAFFIC LEVEL 3 WEDGE COURSE. (MAX. LIFT = 2.5") ⚠
17. CUT BITUMINOUS CONCRETE PAVEMENT
18. SAWING AND SEALING JOINTS IN BITUMINOUS CONCRETE PAVEMENT

* SLOPE VARIES (SEE CROSS-SECTIONS)

ADDENDUM NO. 1

REV.	DATE	REVISION DESCRIPTION	SHEET NO.
⚠	09/13/18	LEGEND MODIFIED	03.04.A1

Plotted Date: 9/20/2018

DESIGNER/DRAFTER: SF/JE
CHECKED BY: MF
SCALE AS NOTED

STATE OF CONNECTICUT
DEPARTMENT OF TRANSPORTATION

Filename: ...\HW_MSH_0096_0200_TYP-1_A1.dgn

SIGNATURE/BLOCK:
STATE OF CONNECTICUT MICHAEL G. FISHER No. 21170 LICENSED PROFESSIONAL ENGINEER
BL Companies
BL COMPANIES, INC.
355 RESEARCH PARKWAY
MERIDEN, CT 06450

PROJECT TITLE:
I-84 RESURFACING, BRIDGE REHABILITATION, AND SAFETY IMPROVEMENTS

TOWN: **NEWTOWN**

DRAWING TITLE: **TYPICAL SECTIONS**

PROJECT NO. **96-200**
DRAWING NO. **TYP-01**
SHEET NO. **03.04.A1**

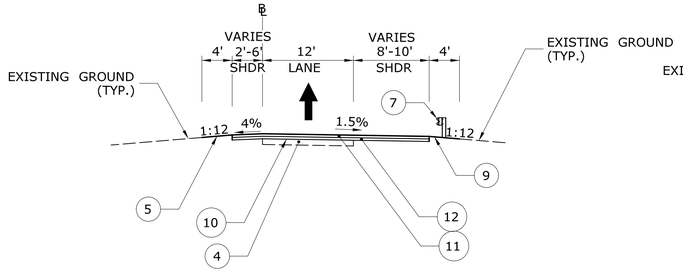

RAMPS A, C, D, G, H & K NORMAL SECTION

SCALE: N.T.S.

D 20+30 TO D 21+70
G 79+90 TO G 80+50
H 82+00 TO G 88+50
K 82+23 TO K 84+00

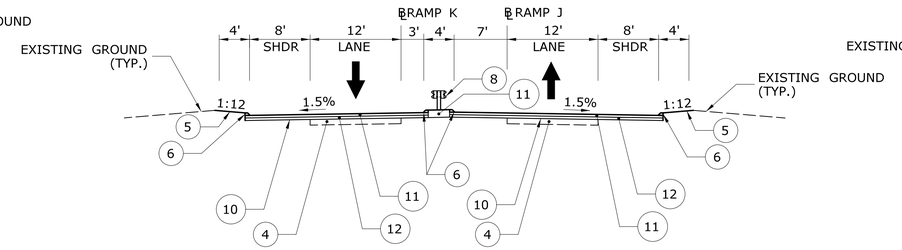

ABUTTING RAMPS J & K NORMAL SECTION

SCALE: N.T.S.

J 95+27 TO J 95+92
K 84+00 TO K 84+47

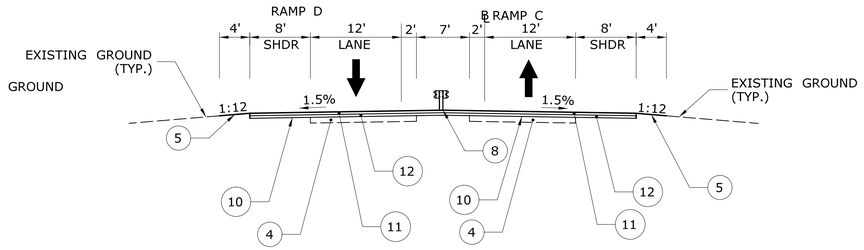

ABUTTING RAMPS C & D NORMAL SECTION

SCALE: N.T.S.

C 22+90 TO C 26+80

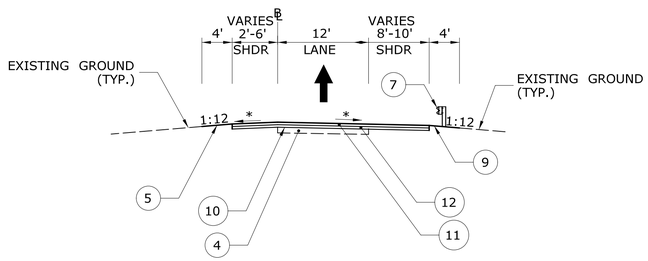

RAMPS A, C, D, G, H & K SUPERELEVATED SECTION

SCALE: N.T.S.

A 10+50 TO A 15+70
C 12+00 TO C 21+97.57
D 16+00 TO D 20+30
D 21+70 TO D 27+52.31
G 74+52 TO G 79+90
H 88+50 TO H 96+00
K 86+50 TO K 97+50

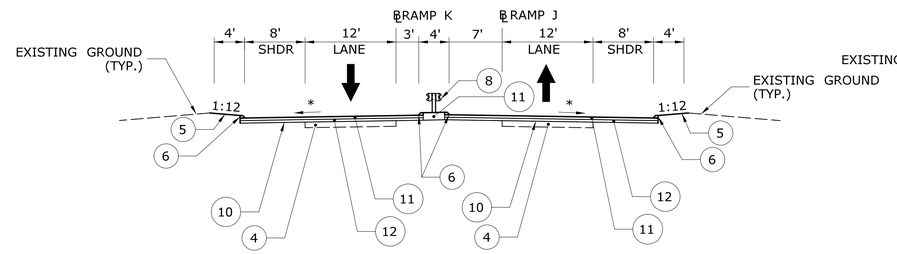

ABUTTING RAMPS J & K SUPERELEVATED SECTION

SCALE: N.T.S.

J 93+50 TO J 95+27
K 84+47 TO K 86+50

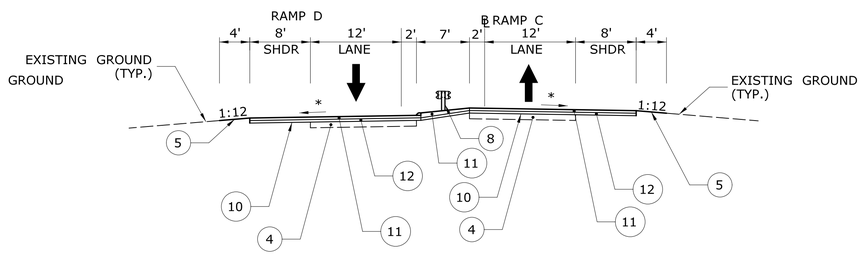

ABUTTING RAMPS C & D SUPERELEVATED SECTION

SCALE: N.T.S.

C 21+97.57 TO C 22+90

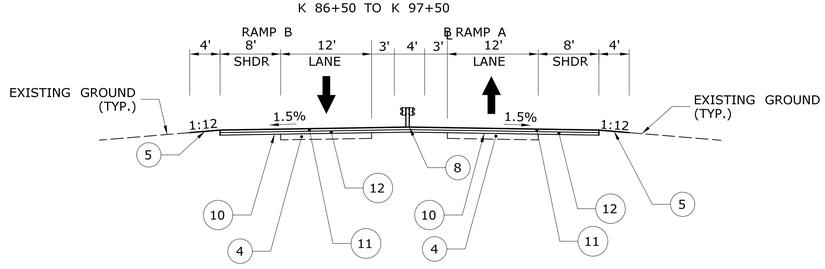

ABUTTING RAMPS A & B NORMAL SECTION

SCALE: N.T.S.

A 19+05 TO A 23+50
B 19+30 TO B 19+62.57

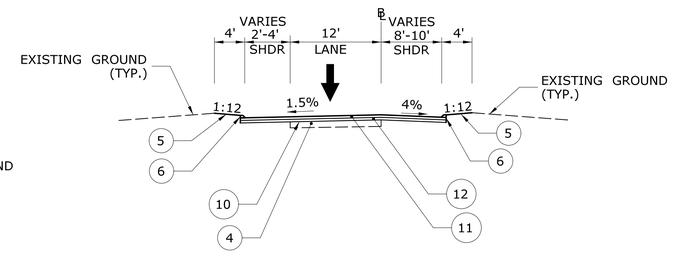

RAMPS B & J NORMAL SECTION

SCALE: N.T.S.

B 13+80 TO B 15+00
J 85+50 TO J 87+60
J 95+92 TO J 96+70

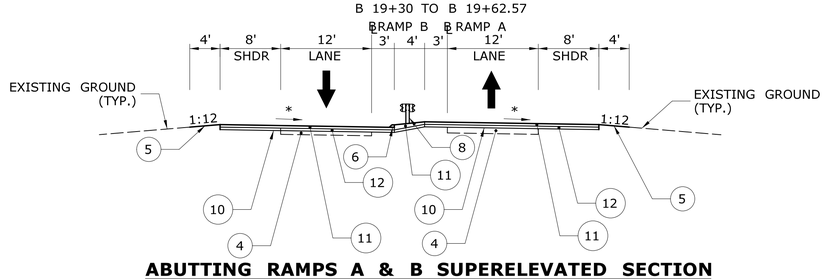

ABUTTING RAMPS A & B SUPERELEVATED SECTION

SCALE: N.T.S.

A 15+70 TO A 19+05
B 15+70 TO B 19+30

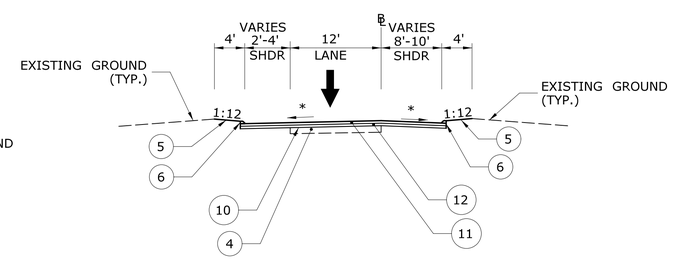

RAMPS B & J SUPERELEVATED SECTION

SCALE: N.T.S.

B 6+84.5 TO B 13+80
B 15+00 TO B 15+70
J 87+60 TO J 93+50
J 96+70 TO J 99+17

LEGEND

1. MILL 2.5" TO 4.0" OF HMA ⚠
2. 2" PMA S0.5 TRAFFIC LEVEL 3
3. 2.5" PMA S0.5 TRAFFIC LEVEL 3
4. 9" EXIST. REINFORCED CONCRETE PAVEMENT (APPROXIMATE LOCATION)
5. 4" TOP SOIL & TURF ESTABLISHMENT
6. BITUMINOUS CONCRETE PARK CURBING
7. METAL BEAM RAIL (TYPE R-B MASH) (SEE ROADWAY PLANS FOR LOCATIONS)
8. METAL BEAM RAIL (TYPE MD-B MASH) (SEE ROADWAY PLANS FOR LOCATIONS)
9. 6" PROCESSED AGGREGATE (WHERE GUIDERAIL IS INSTALLED)
10. MILL 3" OF HMA
11. 2" PMA S0.5 TRAFFIC LEVEL 3
12. 1" HMA S0.25 TRAFFIC LEVEL 2
13. 4" PMA S0.5 TRAFFIC LEVEL 3 IN TWO EQUAL LIFTS
14. 4" HMA S1.0 TRAFFIC LEVEL 3
15. 12" SUBBASE
16. HMA S0.25 TRAFFIC LEVEL 3 WEDGE COURSE. (MAX. LIFT = 2.5") ⚠
17. CUT BITUMINOUS CONCRETE PAVEMENT
18. SAWING AND SEALING JOINTS IN BITUMINOUS CONCRETE PAVEMENT

* SLOPE VARIES (SEE CROSS-SECTIONS)

ADDENDUM NO. 1

REV.	DATE	REVISION DESCRIPTION	SHEET NO.
⚠	09/13/18	LEGEND MODIFIED	03.05.A1

Plotted Date: 9/20/2018

DESIGNER/DRAFTER: SF/JE
CHECKED BY: MF
SCALE AS NOTED

STATE OF CONNECTICUT
DEPARTMENT OF TRANSPORTATION

Filename: ...\HW_MSH_0096_0200_TYP-2_A1.dgn

SIGNATURE/BLOCK:
BL Companies
BL COMPANIES, INC.
355 RESEARCH PARKWAY
MERIDEN, CT 06450

PROJECT TITLE:
I-84 RESURFACING, BRIDGE REHABILITATION, AND SAFETY IMPROVEMENTS

TOWN: NEWTOWN

DRAWING TITLE: TYPICAL SECTIONS

PROJECT NO. 96-200
DRAWING NO. TYP-02
SHEET NO. 03.05.A1

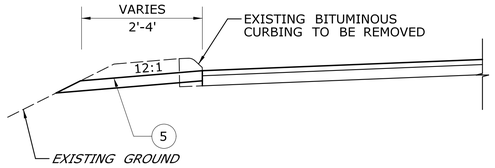

TYPICAL GRADING FOR REMOVAL OF EXISTING CURBING

SCALE: N.T.S.

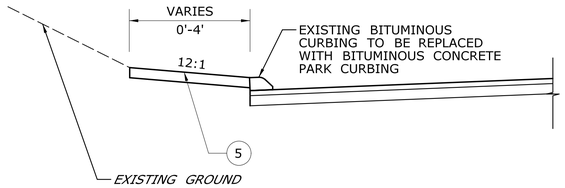

TYPICAL GRADING FOR REPLACEMENT OF EXISTING CURBING

SCALE: N.T.S.

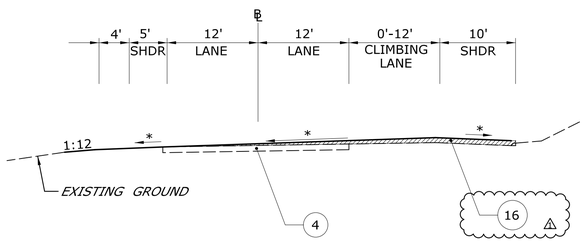

TYPICAL DETAIL OF WEDGE COURSE

SCALE: N.T.S.

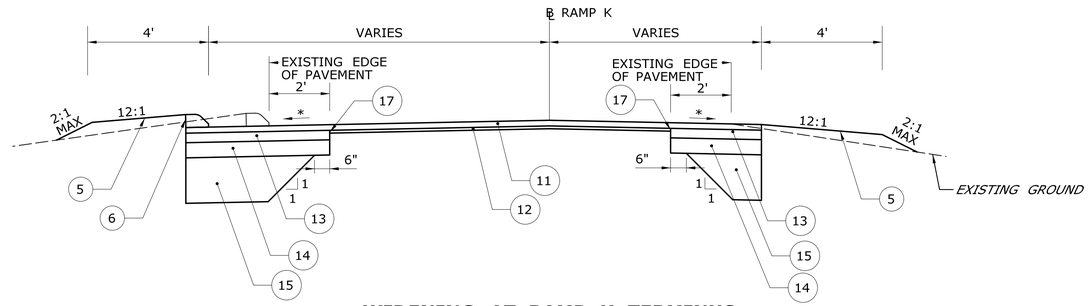

WIDENING AT RAMP K TERMINUS

SCALE: N.T.S.

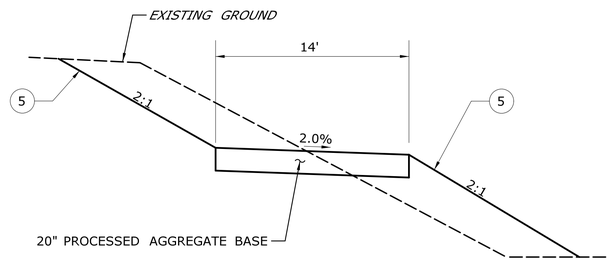

ACCESS ROAD TYPICAL SECTION

SCALE: N.T.S.
CULVERT SITE 1 - EB
CULVERT SITE 2 - EB
CULVERT SITE 3 - EB
CULVERT SITE 4 - EB

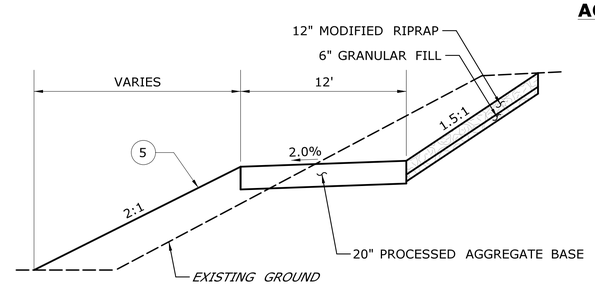

ACCESS ROAD TYPICAL SECTION

SCALE: N.T.S.
CULVERT SITE 2 - WB

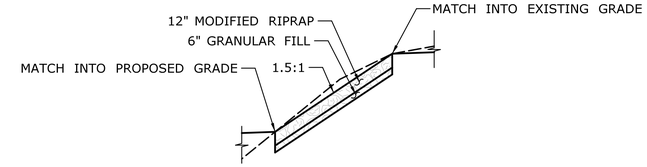

MODIFIED RIPRAP PROTECTED SLOPE

SCALE: N.T.S.

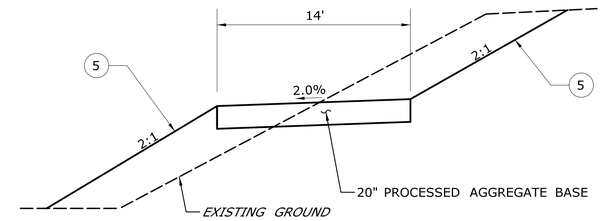

ACCESS ROAD TYPICAL SECTION

SCALE: N.T.S.
CULVERT SITE 1 - WB
CULVERT SITE 3 - WB
CULVERT SITE 4 - WB

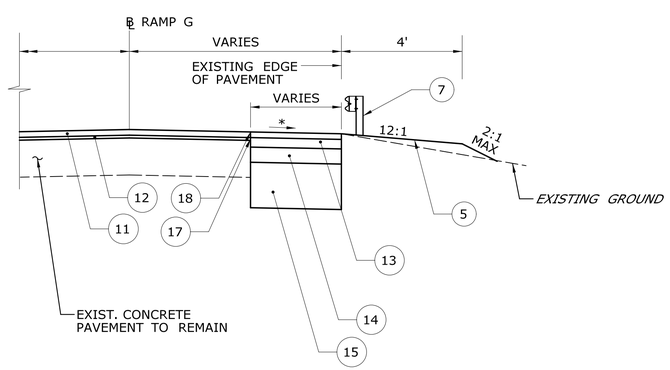

FULL DEPTH RECONSTRUCTION AT RAMP G TERMINUS

SCALE: N.T.S.

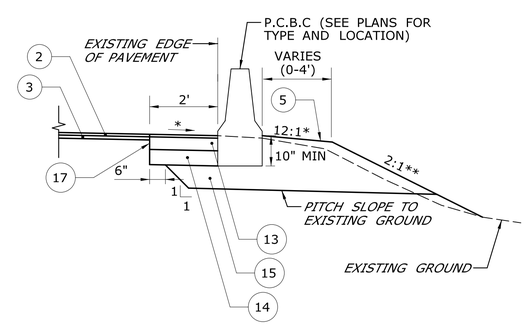

*POSITIVE SLOPE IN CUT CONDITIONS VARIES.

**1.5:1 IN RESTRICTED AREAS. SEE RIPRAP SLOPE DETAIL THIS SHEET.

FULL DEPTH RECONSTRUCTION AT P.C.B.C - 1

SCALE: N.T.S.

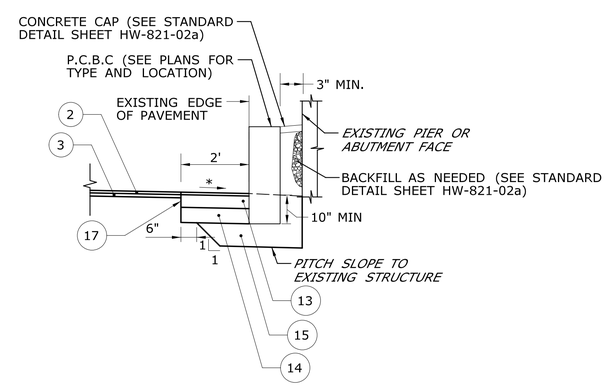

FULL DEPTH RECONSTRUCTION AT P.C.B.C - 2

SCALE: N.T.S.

LEGEND

1. MILL 2.5" TO 4.0" OF HMA ⚠
2. 2" PMA S0.5 TRAFFIC LEVEL 3
3. 2.5" PMA S0.5 TRAFFIC LEVEL 3
4. 9" EXIST. REINFORCED CONCRETE PAVEMENT (APPROXIMATE LOCATION)
5. 4" TOP SOIL & TURF ESTABLISHMENT
6. BITUMINOUS CONCRETE PARK CURBING
7. METAL BEAM RAIL (TYPE R-B MASH) (SEE ROADWAY PLANS FOR LOCATIONS)
8. METAL BEAM RAIL (TYPE MD-B MASH) (SEE ROADWAY PLANS FOR LOCATIONS)
9. 6" PROCESSED AGGREGATE (WHERE GUIDERAIL IS INSTALLED)
10. MILL 3" OF HMA
11. 2" PMA S0.5 TRAFFIC LEVEL 3
12. 1" HMA S0.25 TRAFFIC LEVEL 2
13. 4" PMA S0.5 TRAFFIC LEVEL 3 IN TWO EQUAL LIFTS
14. 4" HMA S1.0 TRAFFIC LEVEL 3
15. 12" SUBBASE
16. HMA S0.25 TRAFFIC LEVEL 3 WEDGE COURSE. (MAX. LIFT = 2.5") ⚠
17. CUT BITUMINOUS CONCRETE PAVEMENT
18. SAWING AND SEALING JOINTS IN BITUMINOUS CONCRETE PAVEMENT

* SLOPE VARIES (SEE CROSS-SECTIONS)

ADDENDUM NO. 1

REV.	DATE	REVISION DESCRIPTION	SHEET NO.
⚠	09/13/18	LEGEND AND DETAIL MODIFIED	03.06.A1

THE INFORMATION, INCLUDING ESTIMATED QUANTITIES OF WORK, SHOWN ON THESE SHEETS IS BASED ON LIMITED INVESTIGATIONS BY THE STATE AND IS IN NO WAY WARRANTED TO INDICATE THE CONDITIONS OF ACTUAL QUANTITIES OF WORK WHICH WILL BE REQUIRED.

Plotted Date: 9/20/2018

DESIGNER/DRAFTER: SF/JE
CHECKED BY: MF
SCALE AS NOTED

STATE OF CONNECTICUT
DEPARTMENT OF TRANSPORTATION

Filename: ...\HW_MSH_0096_0200_TYP-3_A1.dgn

SIGNATURE/BLOCK:
BL COMPANIES, INC.
355 RESEARCH PARKWAY
MERIDEN, CT 06450

PROJECT TITLE:
I-84 RESURFACING, BRIDGE REHABILITATION, AND SAFETY IMPROVEMENTS

TOWN: **NEWTOWN**

DRAWING TITLE: **TYPICAL SECTIONS**

PROJECT NO. **96-200**
DRAWING NO. **TYP-03**
SHEET NO. **03.06.A1**

NOTE:
EXISTING CONCRETE CHANNEL REMOVAL IS TO BE PAID FOR UNDER ITEM 0974001 - REMOVAL OF EXISTING MASONRY.

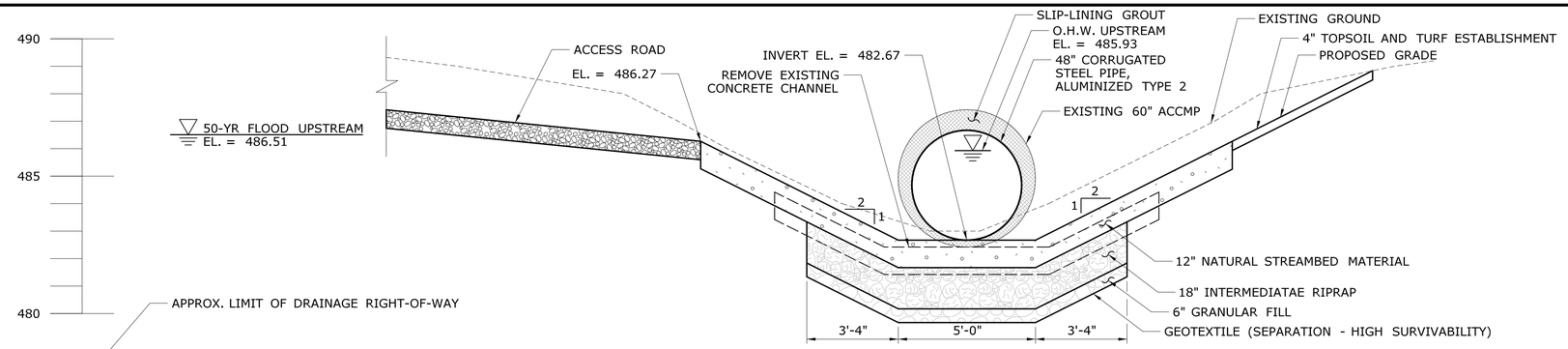

INLET ELEVATION

SCALE: 3/8" = 1'-0"
STA. 146+00 EB 60' RT.

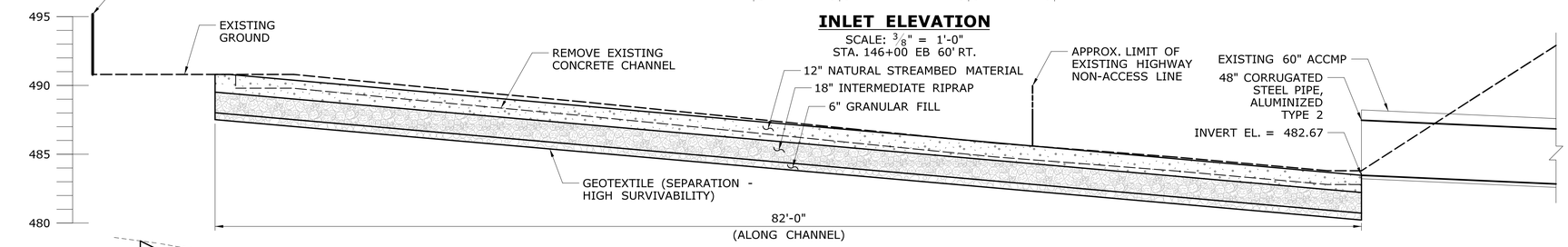

INLET SECTION

SCALE: 1" = 5'-0"

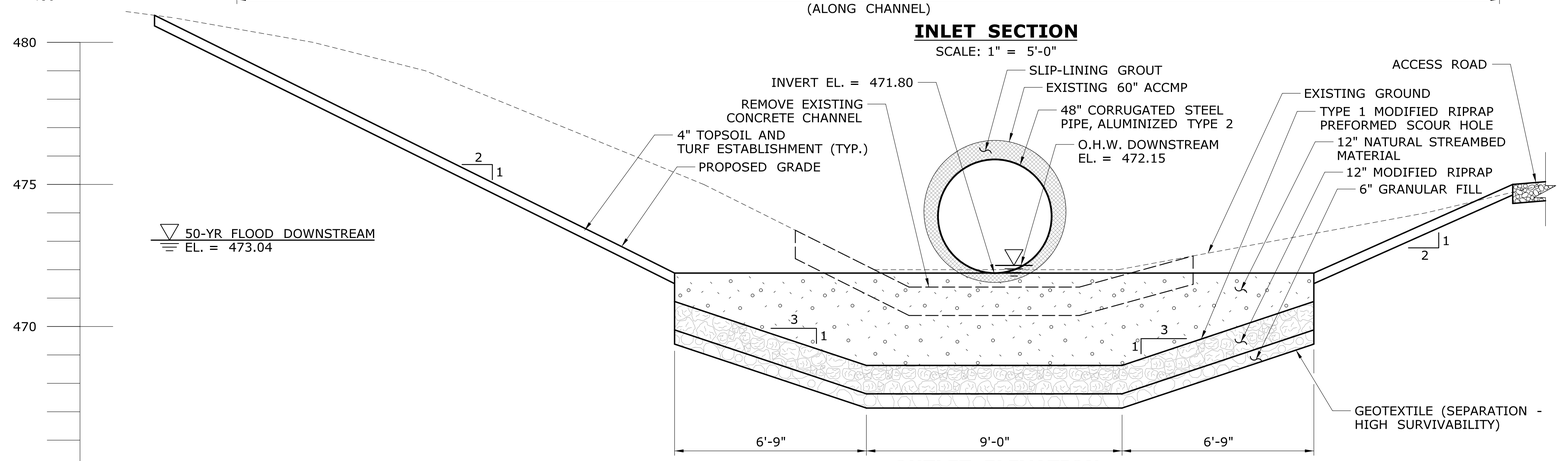

OUTLET ELEVATION

SCALE: 3/8" = 1'-0"
STA. 146+00 WB 63' LT.

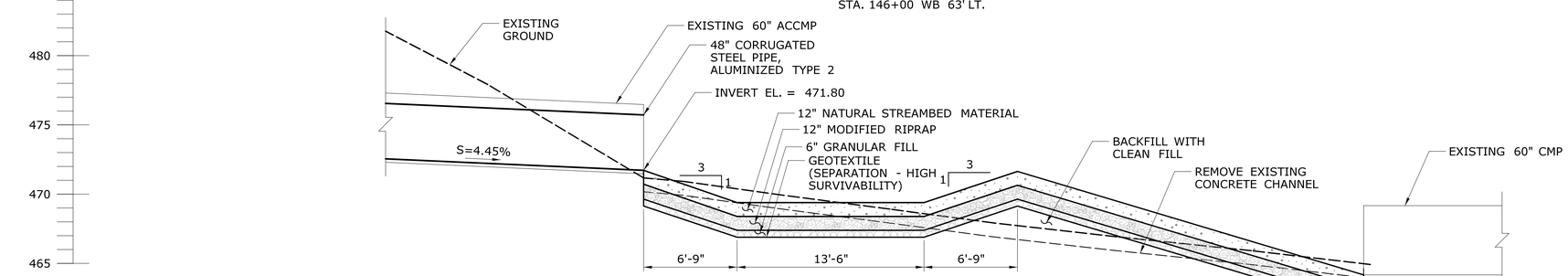

OUTLET SECTION

SCALE: 1" = 5'-0"

HYDRAULIC DATA	
DRAINAGE AREA	0.12 SQ. MILE
FREQUENCY	50 YEAR
DESIGN DISCHARGE	92 CFS
AVERAGE DAILY FLOW ELEVATION UPSTREAM	485.78 FT.
AVERAGE DAILY FLOW ELEVATION DOWNSTREAM	470.85 FT.
UPSTREAM DESIGN WATER SURFACE ELEVATION	486.51 FT.
DOWNSTREAM DESIGN WATER SURFACE ELEVATION	473.04 FT.
MAXIMUM SCOUR ELEVATION FREQUENCY DISCHARGE	N/A N/A N/A
WORST CASE SCOUR SUBSTRUCTURE UNIT	N/A

ADDENDUM NO. 1

REV.	DATE	REVISION DESCRIPTION	SHEET NO.
1	09/13/18	NOTE ADDED	03.10.A1

THE INFORMATION, INCLUDING ESTIMATED QUANTITIES OF WORK, SHOWN ON THESE SHEETS IS BASED ON LIMITED INVESTIGATIONS BY THE STATE AND IS IN NO WAY WARRANTED TO INDICATE THE CONDITIONS OF ACTUAL QUANTITIES OF WORK WHICH WILL BE REQUIRED.

Plotted Date: 9/20/2018

DESIGNER/DRAFTER: JE
CHECKED BY: MF
SCALE AS NOTED

STATE OF CONNECTICUT
DEPARTMENT OF TRANSPORTATION

Filename: ...\HW_MSH_0096_0200_MDS-4_A1.dgn

SIGNATURE/BLOCK:
BL Companies
BL COMPANIES, INC.
355 RESEARCH PARKWAY
MERIDEN, CT 06450

PROJECT TITLE:
I-84 RESURFACING, BRIDGE REHABILITATION, AND SAFETY IMPROVEMENTS

TOWN: **NEWTOWN**

DRAWING TITLE:
ELEVATION AND SECTION CULVERT SITE NO. 1

PROJECT NO. **96-200**
DRAWING NO. **MDS-04**
SHEET NO. **03.10.A1**

NOTE:
EXISTING CONCRETE CHANNEL REMOVAL IS TO BE PAID FOR UNDER ITEM 0974001 - REMOVAL OF EXISTING MASONRY.

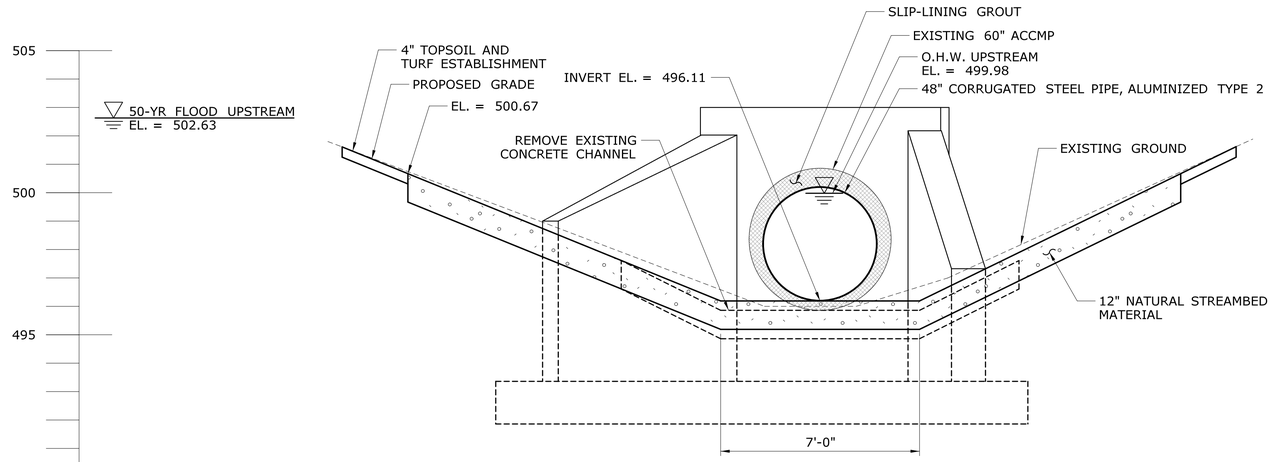

INLET ELEVATION
SCALE: 3/8" = 1'-0"
STA. 182+60 EB 106' RT.

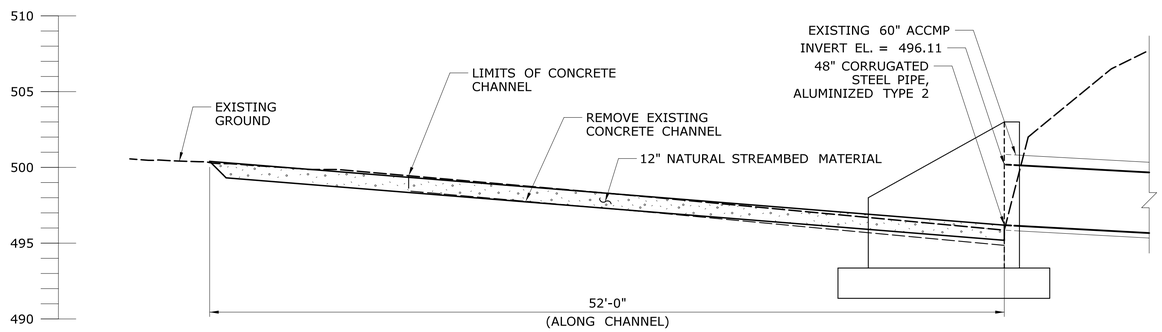

INLET SECTION
SCALE: 1" = 5'-0"

HYDRAULIC DATA	
DRAINAGE AREA	0.21 SQ. MILE
FREQUENCY	50 YEAR
DESIGN DISCHARGE	127 CFS
AVERAGE DAILY FLOW ELEVATION UPSTREAM	499.81 FT.
AVERAGE DAILY FLOW ELEVATION DOWNSTREAM	472.04 FT.
UPSTREAM DESIGN WATER SURFACE ELEVATION	502.63 FT.
DOWNSTREAM DESIGN WATER SURFACE ELEVATION	473.60 FT.
MAXIMUM SCOUR ELEVATION FREQUENCY DISCHARGE	N/A N/A N/A
WORST CASE SCOUR SUBSTRUCTURE UNIT	N/A

ADDENDUM NO. 1

REV.	DATE	REVISION DESCRIPTION	SHEET NO.
1	09/13/18	NOTE ADDED	03.11.A1

THE INFORMATION, INCLUDING ESTIMATED QUANTITIES OF WORK, SHOWN ON THESE SHEETS IS BASED ON LIMITED INVESTIGATIONS BY THE STATE AND IS IN NO WAY WARRANTED TO INDICATE THE CONDITIONS OF ACTUAL QUANTITIES OF WORK WHICH WILL BE REQUIRED.

Plotted Date: 9/20/2018

DESIGNER/DRAFTER: JE
CHECKED BY: MF
SCALE AS NOTED

STATE OF CONNECTICUT
DEPARTMENT OF TRANSPORTATION

Filename: ..\HW_MSH_0096_0200_MDS-5_A1.dgn

SIGNATURE/BLOCK:
BL Companies
BL COMPANIES, INC.
355 RESEARCH PARKWAY
MERIDEN, CT 06450

PROJECT TITLE:
I-84 RESURFACING, BRIDGE REHABILITATION, AND SAFETY IMPROVEMENTS

TOWN: **NEWTOWN**

DRAWING TITLE:
ELEVATION AND SECTION CULVERT SITE NO. 2

PROJECT NO. **96-200**
DRAWING NO. **MDS-05**
SHEET NO. **03.11.A1**

NOTE:
EXISTING CONCRETE CHANNEL REMOVAL IS TO BE PAID FOR UNDER ITEM 0974001 - REMOVAL OF EXISTING MASONRY.

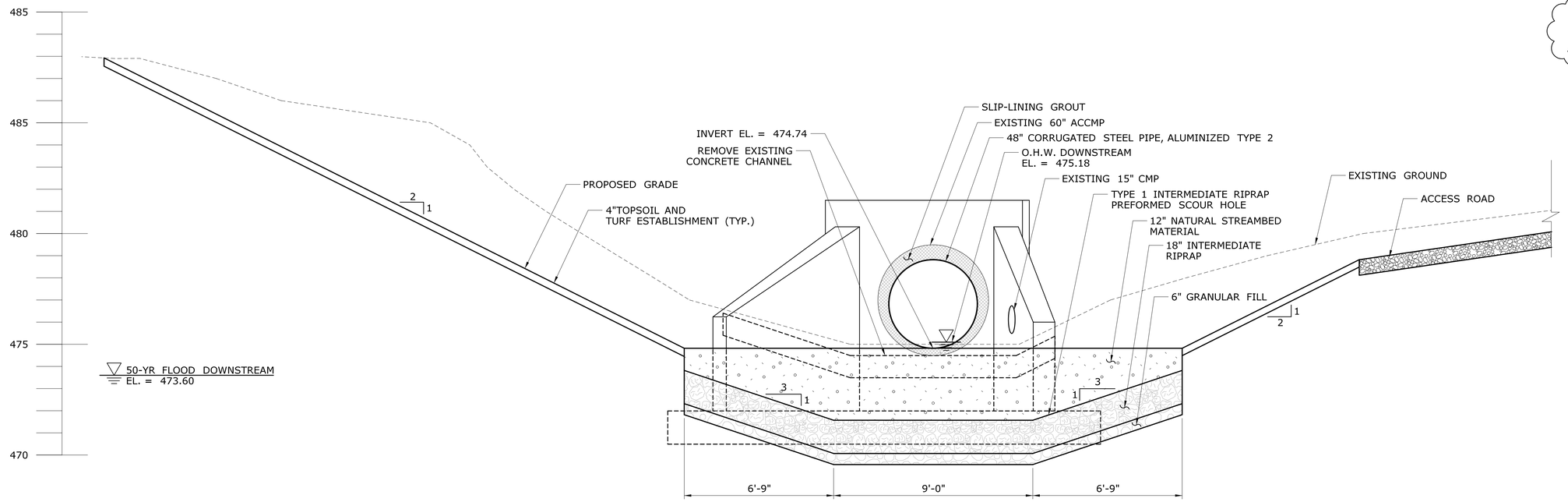

OUTLET ELEVATION

SCALE: 3/8" = 1'-0"
STA. 182+00 WB 132' LT.

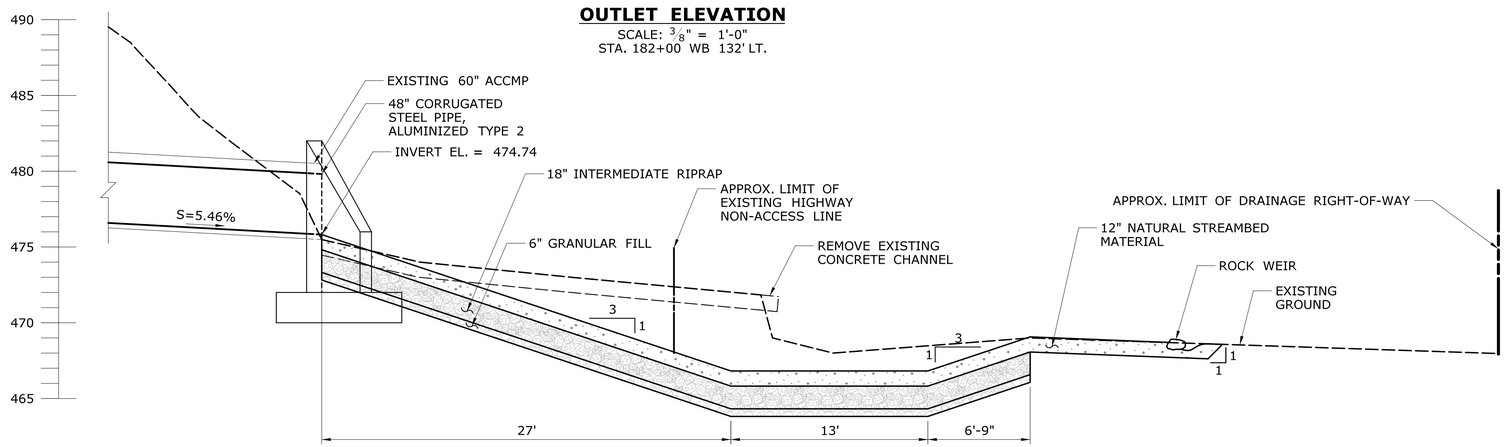

OUTLET SECTION

SCALE: 1" = 5'-0"

ADDENDUM NO. 1

REV.	DATE	REVISION DESCRIPTION	SHEET NO.
1	09/13/18	NOTE ADDED	03.12.A1

THE INFORMATION, INCLUDING ESTIMATED QUANTITIES OF WORK, SHOWN ON THESE SHEETS IS BASED ON LIMITED INVESTIGATIONS BY THE STATE AND IS IN NO WAY WARRANTED TO INDICATE THE CONDITIONS OF ACTUAL QUANTITIES OF WORK WHICH WILL BE REQUIRED.

Plotted Date: 9/20/2018

DESIGNER/DRAFTER: **JE**
CHECKED BY: **MF**
SCALE AS NOTED

STATE OF CONNECTICUT
DEPARTMENT OF TRANSPORTATION

Filename: ..\HW_MSH_0096_0200_MDS-6_A1.dgn

SIGNATURE/BLOCK:
BL Companies
BL COMPANIES, INC.
355 RESEARCH PARKWAY
MERIDEN, CT 06450

PROJECT TITLE:
I-84 RESURFACING, BRIDGE REHABILITATION, AND SAFETY IMPROVEMENTS

TOWN: **NEWTOWN**

DRAWING TITLE: **ELEVATION AND SECTION CULVERT SITE NO. 2**

PROJECT NO. **96-200**
DRAWING NO. **MDS-06**
SHEET NO. **03.12.A1**

GENERAL NOTES

1. ALL BIDDERS SHOULD INSPECT THE PROJECT SITES PRIOR TO SUBMITTING BIDS TO VERIFY THE FIELD CONDITIONS WHICH MAY BE ENCOUNTERED AND THE NATURE OF THE WORK TO BE DONE UNDER THIS CONTRACT. NO COMPENSATION WILL BE ALLOWED TO THE BIDDER FOR FAILURE TO INCLUDE ALL LABOR, MATERIALS AND EQUIPMENT COSTS NECESSARY TO COMPLETE THE WORK.

2. THE CONTRACTOR SHALL OBTAIN ALL PERMITS, APPROVALS AND LICENSES NECESSARY OR REQUIRED FOR THE PERFORMANCE OF THE WORK. THE COST OF OBTAINING THESE PERMITS, APPROVALS AND LICENSES SHALL BE PAID FOR BY THE CONTRACTOR.

3. THE CONTRACTOR SHALL PERFORM ALL WORK WITH CARE SO THAT ANY MATERIALS WHICH ARE TO REMAIN IN PLACE OR WHICH ARE TO REMAIN IN THE PROPERTY OF THE STATE WILL NOT BE DAMAGED. IF THE CONTRACTOR DAMAGES ANY MATERIALS WHICH ARE TO REMAIN THE PROPERTY OF THE STATE, THE DAMAGED MATERIALS SHALL BE REPAIRED OR REPLACED IN A MANNER SATISFACTORY TO THE ENGINEER AT THE EXPENSE OF THE CONTRACTOR.

4. THE CONTRACTOR SHALL INSTALL SEDIMENTATION CONTROL SYSTEM AROUND CATCH BASINS IN THE MEDIAN TO AVOID FILLING CATCH BASINS WITH DEBRIS RESULTING FROM THE CONTRACT OPERATIONS. IN THE EVENT THE CONTRACTOR'S OPERATION DAMAGES OR BLOCKS THE DRAINAGE SYSTEM, THE CONTRACTOR SHALL IMMEDIATELY REPAIR OR RESTORE THE DRAINAGE SYSTEM AS DIRECTED BY THE ENGINEER AT NO COST TO THE STATE.

5. ALL WORK TO BE PERFORMED UNDER THIS CONTRACT SHALL BE WITHIN THE PUBLIC RIGHT OF WAY EXCEPT AS NOTED, INCLUDING BUT NOT LIMITED TO VEHICLE ACCESS, STORAGE OF EQUIPMENT, MATERIALS, DEBRIS AND WASTE, AND THE INSTALLATION OF ANY PROTECTIVE BARRIERS.

6. ALL DISTURBED AREAS SHALL BE TREATED WITH 4" TOP SOIL AND TURF ESTABLISHMENT UNLESS OTHERWISE NOTED OR DIRECTED BY THE ENGINEER.

7. THE COST OF REMOVAL OF BITUMINOUS CONCRETE PAVEMENT UNDER EXISTING RAILING SHALL BE PAID FOR UNDER THE CONTRACT UNIT PRICE FOR ITEM 0202000A - EARTH EXCAVATION. SEE SPECIAL PROVISIONS.

8. THE COST OF REMOVAL OF BITUMINOUS PAVED DITCHES AND LEAK- OFFS SHALL BE PAID FOR UNDER THE CONTRACT UNIT PRICE FOR ITEM 0202000A - EARTH EXCAVATION. SEE SPECIAL PROVISIONS.

9. THE COST OF REMOVAL OF EXISTING CURBING SHALL BE PAID FOR UNDER THE CONTRACT UNIT PRICE FOR ITEM 0202000A - EARTH EXCAVATION. SEE SPECIAL PROVISIONS.

10. THE DIMENSIONS SHOWN FOR INSIDE AND OUTSIDE SHOULDER WIDTHS ARE APPROXIMATE AND SHOWN FOR INFORMATIONAL PURPOSES ONLY.

11. MATERIAL FOR TACK COAT SHALL BE APPLIED PER SECTION 4.06 OF THE SPECIAL PROVISIONS.

12. BASED ON RECORD DRAWINGS CONCRETE PAVEMENT IS NOT PRESENT BELOW RAMPS J AND K.

13. REMOVAL OF PAVED DITCH/LEAK-OFF SHALL BE RESTORED WITH 4" TOPSOIL AND TURF ESTABLISHMENT, TO BE PAID FOR UNDER ITEMS 0944000 - FURNISHING AND PLACING TOPSOIL AND 0950005 - TURF ESTABLISHMENT

14. ALL TYPE-I GUIDERAIL END ANCHORAGES SHALL BE INSTALLED A MINIMUM OF 30 FT FROM ANY TRAVEL LANE OR AS DIRECTED BY THE ENGINEER.

15. ALL DELINEATORS WITHIN THE PROJECT LIMITS SHALL BE REPLACED IN ACCORDANCE WITH STANDARD SHEET TR-1205_01 "DELINEATION, DELINEATORS AND OBJECT MARKER DETAILS".

16. SEDIMENTATION CONTROL SYSTEM AT CATCH BASINS SHALL BE PROVIDED AT ALL PROPOSED CATCH BASIN TOP LOCATIONS WITHIN PROJECT LIMITS.

17. RUMBLE STRIP REMOVAL WITHIN THE PROJECT LIMITS WILL NOT BE MEASURED SEPERATELY FOR PAYMENT AS RUMBLE STRIPS WILL BE REMOVED BY MILLING OPERATIONS. RUMBLE STRIP REMOVAL OUTSIDE THE PROJECT LIMITS, WHERE NECESSARY FOR TEMPORARY LANE SHIFTS, WILL BE PAID FOR UNDER ITEM 0406289A - REMOVAL OF RUMBLE STRIPS. 1

UTILITIES

1. SHOULD UTILITIES BE ENCOUNTERED DURING CONSTRUCTION WHICH INTERFERE WITH THE WORK AND FOR WHICH PROVISIONS ARE NOT MADE ON THE PLANS, THE CONTRACTOR SHALL IMMEDIATELY STOP WORKING IN THE AFFECTED AREA AND NOTIFY THE ENGINEER OF THE EXISTENCE OF THESE UTILITIES AND OF THE EXTENT OF CONFLICT WITH THE WORK.

2. THE CONTRACTOR SHALL CONDUCT OPERATIONS IN A MANNER THAT AVOIDS DAMAGE TO UTILITIES. THE CONTRACTOR SHALL PERFORM SUBSURFACE EXPLORATION AS NECESSARY TO DEFFINITIVELY LOCATE AND TO DETERMINE THE SIZE OF UNDERGROUND UTILITIES THAT MAY BE IN CONFLICT WITH CONSTRUCTION OPERATIONS.

3. PRIOR TO THE COMMENCEMENT OF CONSTRUCTION, THE CONTRACTOR SHALL MEET WITH ALL KNOWN PUBLIC AND PRIVATE UTILITY COMPANIES OCCUPYING THE WORK SITE. THE CONTRACTOR SHALL, AT THIS MEETING, INFORM THE UTILITY COMPANIES OF THE SCHEDULE OF OPERATIONS AND COORDINATE THE WORK WITH THESE COMPANIES.

LOCATION OF UNDERGROUND CABLES AND LIGHTING

1. THE CONTRACTOR IS ADVISED THAT LIGHTING FACILITIES EXIST WITHIN THE PROJECT LIMITS. THE CONTRACTOR IS RESPONSIBLE FOR THE COST TO REPAIR ALL DAMAGE TO THESE FACILITIES RESULTING FROM CONSTRUCTION OPERATIONS AS APPROVED BY THE ENGINEER.

SIGNING

1. EXACT SIGNING LOCATIONS SHALL BE DETERMINED BY THE ENGINEER.

2. WHEN A SIGN IS TO BE REPLACED, THE EXISTING SIGN SHOULD NOT BE REMOVED UNTIL THE REPLACEMENT SIGN IS INSTALLED.

3. INSTALL SIGNS AND METAL SIGN POSTS IN ACCORDANCE WITH TRAFFIC STANDARD SHEETS TR-1208_01 "SIGN PLACEMENT AND RETROREFLECTIVE STRIP DETAILS" AND TR-1208_02 "METAL SIGN POSTS AND SIGN MOUNTING DETAILS".

4. ALL EXISTING SIGNS WITHIN THE PROJECT LIMITS ARE TO REMAIN UNLESS OTHERWISE NOTED ON THE PLANS OR DIRECTED BY THE ENGINEER.

PAVEMENT MARKINGS

1. ALL FINAL PAVEMENT MARKINGS ARE TO BE EPOXY RESIN.

2. ALL PAVEMENT MARKINGS TO BE INSTALLED IN ACCORDANCE WITH TRAFFIC STANDARD SHEETS TR-1210_04 "PAVEMENT MARKING LINES AND SYMBOLS", TR-1210_05 AND TR-1210_06 "PAVEMENT MARKINGS FOR DIVIDED HIGHWAYS", TR-1210_07 "PAVEMENT MARKINGS FOR EXIT RAMPS", AND TR-1210_08 "PAVEMENT MARKINGS FOR NON FREEWAYS".

3. PAVEMENT MARKING GROVE SHALL BE INSTALLED UNLESS OTHERWISE NOTED, THE GROOVE SHALL BE 1 INCH WIDER THAN THE ANTICIPATED PAVEMENT MARKING.

4. INSTALL ALL PAVEMENT MARKINGS WITHIN THE LIMITS OF CONSTRUCTION UNLESS OTHERWISE SHOWN OR AS DIRECTED BY THE ENGINEER. MATCH TO EXISTING PAVEMENT MARKINGS AT THE LIMIT OF CONSTRUCTION.

5. EXISTING PAVEMENT MARKINGS SHALL BE REMOVED BY THE CONTRACTOR WHERE IN CONFLICT WITH THE PROPOSED PAVEMENT MARKINGS.

ADDENDUM NO. 1

REV.	DATE	REVISION DESCRIPTION	SHEET NO.
1	09/13/18	RUMBLE STRIP NOTE ADDED	03.22.A1

THE INFORMATION, INCLUDING ESTIMATED QUANTITIES OF WORK, SHOWN ON THESE SHEETS IS BASED ON LIMITED INVESTIGATIONS BY THE STATE AND IS IN NO WAY WARRANTED TO INDICATE THE CONDITIONS OF ACTUAL QUANTITIES OF WORK WHICH WILL BE REQUIRED.

Plotted Date: 9/20/2018

DESIGNER/DRAFTER: SF/JE
CHECKED BY: MF

STATE OF CONNECTICUT
DEPARTMENT OF TRANSPORTATION

Filename: ...\HW_MSH_0096_0200_GNT-1_A1.dgn

SIGNATURE/BLOCK:

BL Companies
BL COMPANIES, INC.
355 RESEARCH PARKWAY
MERIDEN, CT 06450

PROJECT TITLE:
I-84 RESURFACING, BRIDGE REHABILITATION, AND SAFETY IMPROVEMENTS

TOWN: **NEWTOWN**

DRAWING TITLE: **GENERAL NOTES**

PROJECT NO. **96-200**
DRAWING NO. **GNT-1**
SHEET NO. **03.22.A1**

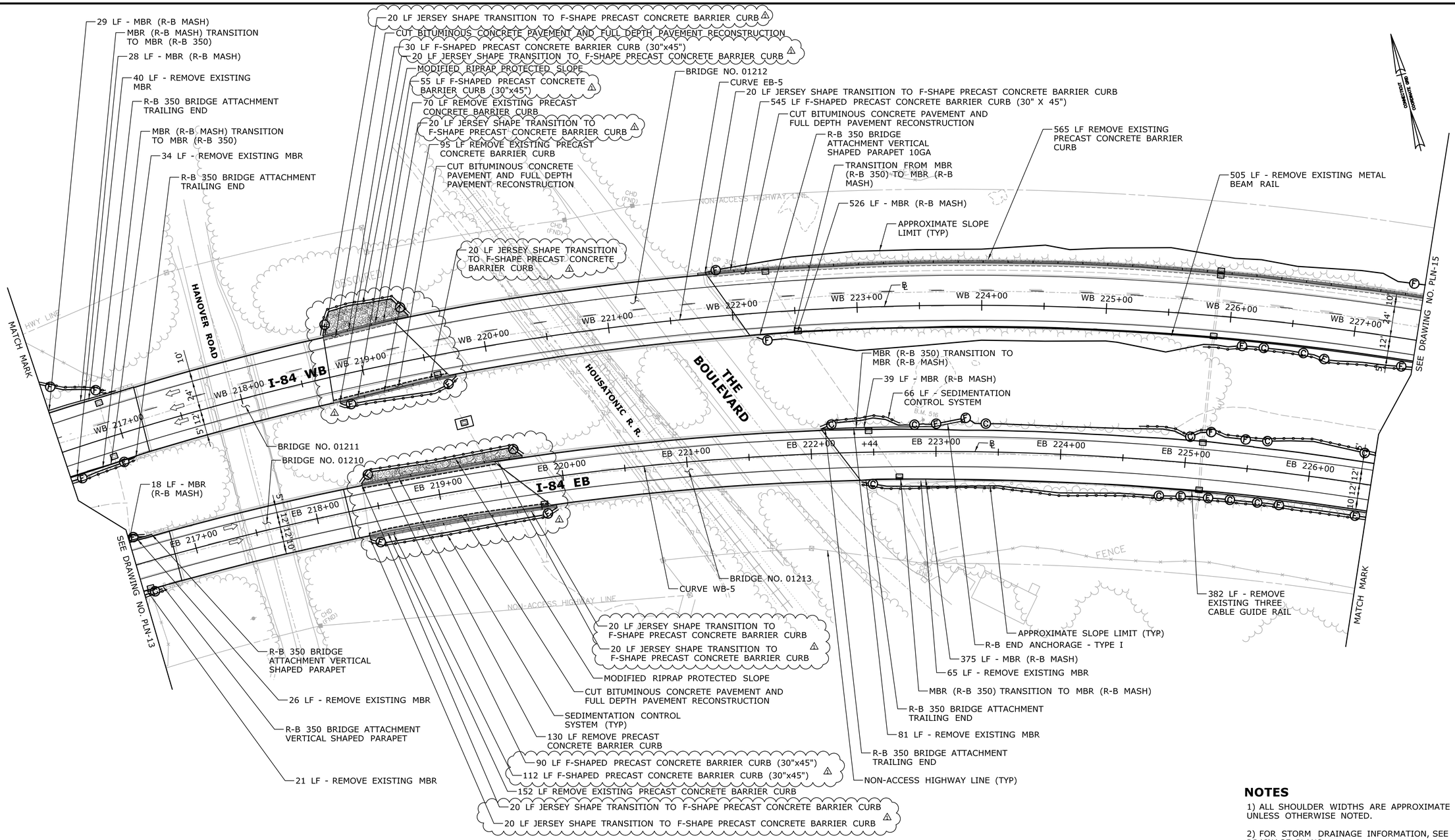

NOTES

1) ALL SHOULDER WIDTHS ARE APPROXIMATE UNLESS OTHERWISE NOTED.

2) FOR STORM DRAINAGE INFORMATION, SEE DRAINAGE PLANS.

LEGEND

- CUT SLOPE LIMIT LINE
- FILL SLOPE LIMIT LINE
- SEDIMENTATION CONTROL SYSTEM
- FULL DEPTH RECONSTRUCTION
- DIRECTION OF TRAVEL

CURVE DATA TABLE		
	I-84 EB	I-84 WB
CURVE	84 EB-5	84 WB-5
Δ	57° 23'38.37"	57° 25'52.70"
T	1254.13'	1260.03'
L	2294.93'	2305.44'
R	2291.00'	2300.00'

BITUMINOUS CONCRETE PARK CURBING TABLE				REMOVAL OF EXISTING CURBING
ALIGNMENT	FROM STA.	TO STA.	LENGTH (FT)	LENGTH (FT)
I-84 EB	222+40 RT	226+50 RT	410	410
I-84 EB	222+08 LT	225+55 LT	347	347
I-84 WB	216+50 RT	217+20 RT	70	70
I-84 WB	222+25 RT	227+50 RT	525	525
I-84 WB	216+50 LT	217+20 LT	20	70

APPROX. METAL BEAM RAIL LONG POST LOCATIONS			
ALIGNMENT	FROM STA.	TO STA.	LENGTH (FT)
I-84 EB	216+50 LT	216+70 LT	20
I-84 EB	216+50 RT	216+70 RT	20
I-84 WB	216+50 LT	216+70 LT	20

ADDENDUM NO. 1

REV.	DATE	REVISION DESCRIPTION	SHEET NO.
1	09/14/18	BARRIER TRANSITION ADDED	03.36.A1

THE INFORMATION, INCLUDING ESTIMATED QUANTITIES OF WORK, SHOWN ON THESE SHEETS IS BASED ON LIMITED INVESTIGATIONS BY THE STATE AND IS IN NO WAY WARRANTED TO INDICATE THE CONDITIONS OF ACTUAL QUANTITIES OF WORK WHICH WILL BE REQUIRED.

Plotted Date: 9/20/2018

DESIGNER/DRAFTER: SF/JE
CHECKED BY: MF
SCALE IN FEET 0 40 80
SCALE 1"=40'

STATE OF CONNECTICUT
DEPARTMENT OF TRANSPORTATION

Filename: ...\HW_MSH_0096_0200_PLN-14_A1.dgn

SIGNATURE/BLOCK:
BL Companies
BL COMPANIES, INC.
355 RESEARCH PARKWAY
MERIDEN, CT 06450

PROJECT TITLE:
I-84 RESURFACING, BRIDGE REHABILITATION, AND SAFETY IMPROVEMENTS

TOWN: **NEWTOWN**

DRAWING TITLE: **ROADWAY PLAN**

PROJECT NO. **96-200**
DRAWING NO. **PLN-14**
SHEET NO. **03.36.A1**