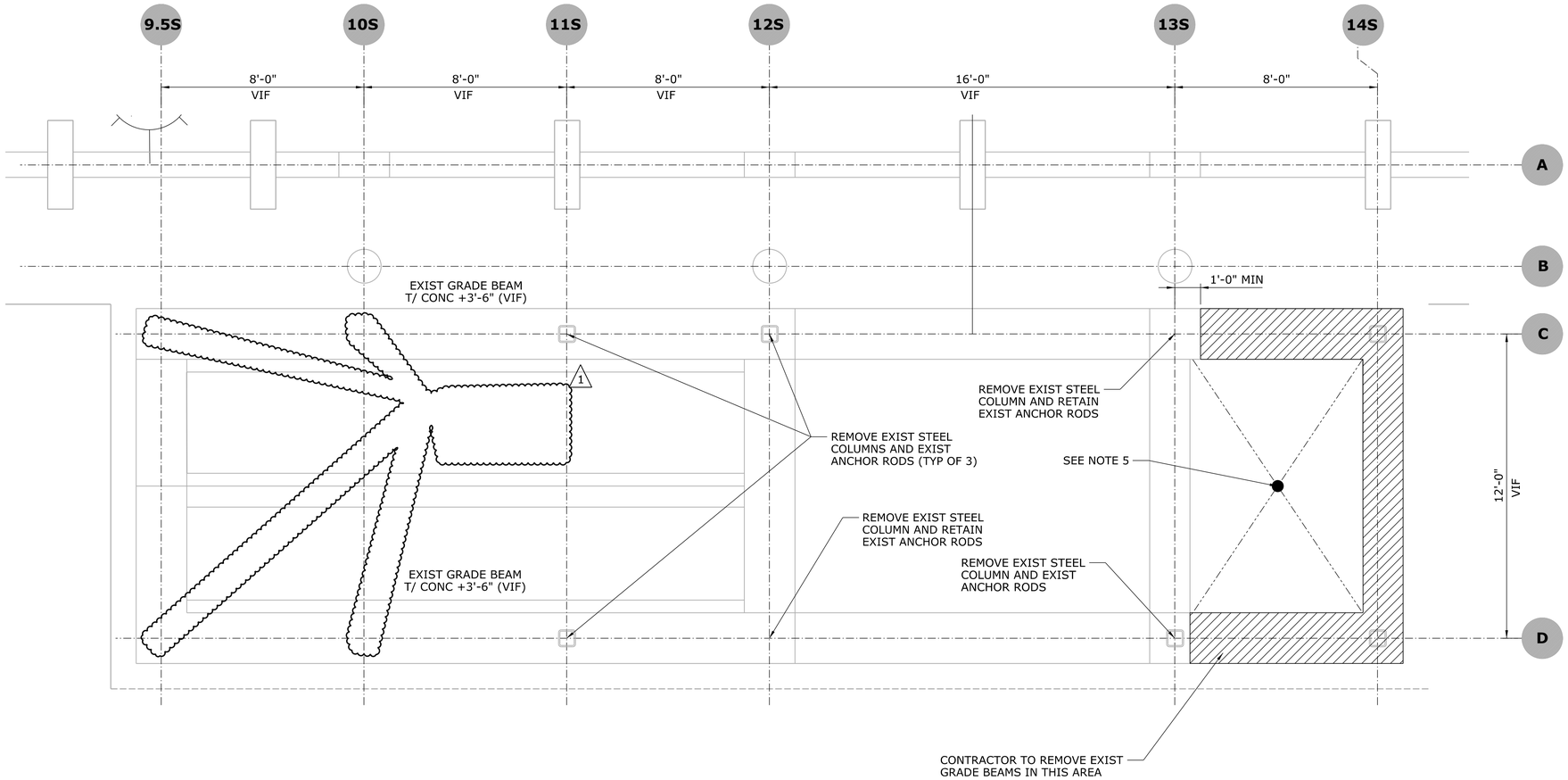

SOUTH TOWER DEMOLITION PLAN NOTES:

1. REFER TO GENERAL NOTES, KEYS & ABBREVIATIONS AND SPECIFICATIONS FOR ADDITIIONAL INFO.
2. REFER TO OVERALL FOUNDATION PLAN SHEET S-100 FOR NOTES, UON.
3. SHADED COLUMN BUBBLES INDICATE EXIST COLUMN LINES.
4. TOP OF RAIL ELEVATION USED FOR SOUTH TOWER = +26.13'. THIS IS THE DATUM ELEVATION = 0'-0". ALL ELEVATIONS ARE REFERENCED FROM THIS ELEVATION.
5. CONTRACTOR TO REMOVE EXISTING ELEVATOR PIT COVER INCLUDING SUPPORT ANGLE AND CUT EXISTING ANCHOR RODS FLUSH TO INSIDE FACE OF PIT WALL. FORM NEW PIT FLOOR AND SUMP PIT TO MATCH NEW CONSTRUTION. HOLD PIT FLOOR CLEARANCE TO FINISHED FLOOR AS INDICATED ON DWG S-205.

N

SOUTH TOWER DEMOLITION PLAN

SCALE: $\frac{3}{8}$"=1'-0"

DESIGNED BY:

Michael Baker INTERNATIONAL
500 ENTERPRISE DRIVE
SUITE 2B
ROCKY HILL, CT. 06067
Phone: (860) 563-3044
MBAKERINTL.COM

STATE OF CONNECTICUT
SCOTT M. DELESDERNIER
No. 19079
LICENSED
PROFESSIONAL ENGINEER

Scott Delesdernier
2018.08.30
08:55:02-04'00'

ADDENDUM NO. 1

REV.	DATE	REVISION DESCRIPTION	SHEET NO.
1	8/24/2018	REMOVED COLUMNS & CALLOUT	06.02.A1

THE INFORMATION, INCLUDING ESTIMATED QUANTITIES OF WORK, SHOWN ON THESE SHEETS IS BASED ON LIMITED INVESTIGATIONS BY THE STATE AND IS IN NO WAY WARRANTED TO INDICATE THE CONDITIONS OF ACTUAL QUANTITIES OF WORK WHICH WILL BE REQUIRED.

Plotted Date: 8/24/2017

DESIGNER/DRAFTER: KR-M
CHECKED BY: MDD
SCALE AS NOTED

STATE OF CONNECTICUT
DEPARTMENT OF TRANSPORTATION

Filename: FD_MSH_STR_0027_0059_S-102.dgn

SIGNATURE/BLOCK:

Michael Baker INTERNATIONAL
500 ENTERPRISE DRIVE
SUITE 2B
ROCKY HILL, CT. 06067
Phone: (860) 563-3044
MBAKERINTL.COM

PROJECT TITLE:
SHORE LINE EAST RAILROAD STATIONS

TOWN: **CLINTON**

DRAWING TITLE: **SOUTH TOWER DEMOLITION PLAN**

PROJECT NO. 310-0059
DRAWING NO. SD-101
SHEET NO. 06.02.A1

DESIGN CRITERIA

DC-1 BUILDING CODES AND SPECIFICATIONS:

A. CONNECTICUT STATE BUILDING CODE, 2016
B. INTERNATIONAL CODE COUNCIL (ICC), 2012 INTERNATIONAL BUILDING CODE
C. AMERICAN SOCIETY OF CIVIL ENGINEERS (ASCE), MINIMUM DESIGN LOADS FOR BUILDINGS AND OTHER STRUCTURES, ASCE 7-10
D. STATE OF CONNECTICUT DEPT. OF TRANSPORTATION, STANDARD SPECIFICATIONS FOR ROADS, BRIDGES AND INCIDENTAL CONSTRUCTION, FORM 816, 2004
E. AMTRAK STANDARD TRACK PLAN FOR MINIMUM ROADWAY CLEARANCE, AM 70050-G
F. AMERICAN INSTITUTE OF STEEL CONSTRUCTION(AISC), STRUCTURAL SPECIFICATIONS FOR STEEL BUILDING (AISC 360-10)
G. AMERCIAN CONCRETE INSTITUTE (ACI), BUILDING CODE REQUIREMENTS FOR STRUCTURAL CONCRETE, ACI 318-11
H. AMERCIAN INSTITUTE OF TIMBER CONSTRUCTION, AITC, "TIMBER CONSTRUCTION MANUAL" (LATEST EDITION), INCLUDING "CODE OF STANDARD PRACTICE, AITC 106"
I. AMERICAN WOOD COUNCIL, AWC, "NATIONAL DESIGN SPECIFICATIONS FOR WOOD CONSTRUCTION" (LATEST EDITION).

DC-2 DESIGN LOADS CRITERIA:

A. LIVE LOADS
1. ROOF — 20 PSF MINIMUM
2. LANDINGS & PLATFORM — 100 PSF

B. SNOW LOADS
1. GROUND SNOW LOAD (Pg) — 30 PSF
2. ROOF SNOW LOAD(Pf) — 30 PSF (CONNECTICUT MIN.)
3. SNOW IMPORTANCE FACTOR (Is) — 1.0
4. SNOW EXPOSURE FACTOR (Ce) — 0.9
5. THERMAL FACTOR (Ct) — 1.2

C. CONSTRUCTION LOADS (NOT TO EXCEED DESIGN LIVE LOADS)

D. WIND DESIGN CRITERIA
1. BASIC WIND SPEED FOR 3 SEC GUSTS(VULT) — 135 MPH
2. WIND IMPORTANCE FACTOR (Iw) — 1.0
3. EXPOSURE CATEGORY — C
4. DESIGN WIND FORCE FOR OPEN STRUCTURE (IE., CANOPY) APPLIED NORMAL TO PLANE OF ROOFLINE (F): 2.4 KIPS
5. COMPONENTS AND CLADDING, EFFECTIVE WIND AREA PRESSURE:

ZONE	10 SQ.FT.	100 SQ.FT.	500 SQ.FT.
ROOF - ALL POSITIVE	16.7 PSF	11.8 PSF	-
ROOF - NEGATIVE ZONE 1	26.5 PSF	24.1 PSF	-
ROOF - NEGATIVE ZONE 2	46.2 PSF	33.9 PSF	-
ROOF - NEGATIVE ZONE 3	68.3 PSF	53.6 PSF	-

* WIDTH OF WIND PRESSURE ZONES PARALLEL TO ROOF EDGE (a)=3.0FT
**INTERPOLATION BETWEEN EFFECTIVE WIND AREAS IS ACCEPTABLE

E. SEISMIC DESIGN CRITERIA
1. SEISMIC IMPORTANCE FACTOR (Ie) — 1.0
2. SITE CLASS — D
3. MAPPED SPECTRAL RESPONSE ACCELATION, SHORT PERIOD (Ss) — 0.169
4. MAPPED SPECTRAL RESPONSE ACCELATION AT 1 SECOND (S1) — 0.059
5. SPECTRAL RESPONSE COEFFICIENT AT SHORT PERIOD (SDS) — 0.186
6. SPECTRAL RESPONSE COEFFICIENT AT 1 SECOND (SD1) — 0.094
7. SEISMIC DESIGN CATEGORY — B
8. BASIC SEISMIC FORCE RESISTING SYSTEM - STEEL SYSTEM NOT SPECIFICALLY DETAILED FOR SEISMIC RESISTANCE
9. DESIGN BASE SHEAR — 16 KIPS
10. SEISMIC RESPONSE COEFFICIENT (Cs) — 0.062
11. RESPONSE MODIFICATION FACTOR (R) — 3
12. ANAYLSIS PROCEDURE USED IS EQUIVALENT LATERAL FORCE PROCEDURE

F. FLOOD LOAD - NOT APPLICABLE

DC-3 FOUNDATION DESIGN CRITERIA:

A. FOUNDATION DESIGN IS BASED UPON THE FOLLOWING SOIL PARAMETERS:
1. NET ALLOWABLE SOIL BEARING PRESSURE:
A. SPREAD OR CONTINUOUS FOOTINGS — 4000 PSF

B. LATERAL EARTH PRESSURE PARAMETERS:
1. SOIL DENSITY — 125 PCF
2. COEFFICIENT OF ACTIVE PRESSURE (Ka) — 0.33
3. COEFFICIENT OF AT-REST PRESSURE (Ko) — 0.50
4. COEFFICIENT OF PASSIVE EARTH PRESSURE (Kp) — 3.00
5. ANGLE OF INTERNAL FRICTION (phi) — 30 DEGREES
6. COEFFICIENT OF FRICTION — 0.5
7. MODULUS OF SUB-GRADE REACTION (ks) — 144 PCI

C.FROST DEPTH — 42" (CONNECTICUT MIN.)

DC-4 MATERIALS:

THE FOLLOWING ASTM DESIGN STANDARDS AND STRESSES SHALL BE THE APPROPRIATE MATERIALS USED FOR THIS PROJECT:

A. CEMENT: ASTM C150 TYPE I OR III
ASTM C150 TYPE II (CONCRETE IN CONTACT WITH EARTH)

B. CONCRETE - MINIMUM COMPRESSIVE STRENGTH (Fc') AT 28 DAYS FOR NORMAL WEIGHT CONCRETE, UON:
1. FOOTINGS, WALLS, PIERS & SLABS — 4000 PSI

C. NON-SHRINK LEVELING GROUT ASTM C1107, Fc'= 5000 PSI AT 28 DAYS

D. REINFORCEMENT:
1. DEFORMED BARS — ASTM A615, GRADE 60
2. WELDED WIRE FABRIC — ASTM A185
3. EPOXY COATED BARS — ASTM A775

E. STEEL:
1. STRUCTURAL STEEL WIDE FLANGE & T-SECTIONS — ASTM A992
2. STRUCTURAL ANGLES, CHANNELS AND PLATES — ASTM A36
3. HOLLOW STRUCTURAL SECTIONS — ASTM A500, GRADE B
4. HIGH STRENGTH BOLTS — ASTM A325-N OR -TC
5. ANCHOR RODS — ASTM F1554, GRADE 36
6. HEADED SHEAR STUD — ASTM A108 TYPE B
7. WELDING ELECTRODE — AWS A5.1 OR A5.5 E70XX
8. STEEL DECK AND METAL STUDS — ASTM A653

F. TIMBER: ALL SAWN LUMBER SHALL HAVE 19% MAX MOISTURE CONTENT AND SHALL BE SURFACE DRY HEM FIR IN THE FOLLOWING GRADES:
1. JOISTS AND RAFTERS — NO. 2 OR BETTER
2. MISC. FRAMING (BLOCKING, SILL PLATES, ETC.) STUD OR BETTER
3. PLYWOOD PANELS - PROVIDE APA PERFORMANCE RATED PANELS COMPLYING WITH THE INDICATED REQUIREMENTS FOR THICKNESS, SPAN RATING AND EDGE DETAIL.

GENERAL

G-1 METHODS, PROCEDURES AND SEQUENCES OF CONSTRUCTION ARE THE RESPONSIBILITY OF THE CONTRACTOR. THE CONTRACTOR IS RESPONSIBLE FOR IDENTIFYING AND IMPLEMENTING THE NECESSARY PRECAUTIONS TO MAINTAIN AND ENSURE THE INTEGRITY OF THE STRUCTURE AT ALL STAGES OF CONSTRUCTION.

G-2 TEMPORARY BRACING, SHEETING, SHORING, ETC, REQUIRED TO ENSURE THE STRUCTURAL INTEGRITY/ STABILITY OF THE EXISTING BUILDINGS, SIDEWALKS, UTILITIES, ETC, DURING CONSTRUCTION IS THE RESPONSIBILITY OF THE CONTRACTOR AND SHALL BE DESIGNED BY A REGISTERED PROFESSIONAL ENGINEER EMPLOYED BY THE CONTRACTOR.

G-3 IMPLEMENTATION OF JOB SITE SAFETY IS THE SOLE RESPONSIBILITY OF THE CONTRACTOR.

G-4 SLEEVES OR BLOCK-OUTS REQUIRED FOR PASSAGE OF DUCTWORK, PIPING, DRAINS, CONDUIT, ETC, IN ADDITION TO ANCHORS AND HANGERS REQUIRED FOR EQUIPMENT AND PIPING AND UNDER-SLAB UTILITIES ARE NOT SPECIFICALLY, NOR GENERALLY, INDICATED ON THE STRUCTURAL DRAWINGS. THE CONTRACTOR IS RESPONSIBLE FOR DETERMINING SUCH REQUIREMENTS PRIOR TO FABRICATION OR ERECTION OF THE STRUCTURE. PENETRATIONS ARE SUBJECT TO APPROVAL BY THE STRUCTURAL ENGINEER OF RECORD.

G-5 DIMENSIONS AND INSTALLATION DETAILS OF PURCHASED EQUIPMENT MUST BE VERIFIED AND COORDINATED WITH THE SUPPORTING STRUCTURE. THE CONTRACTOR IS RESPONSIBLE FOR DETERMINING SUCH REQUIREMENTS FROM SUBCONTRACTORS AND EQUIPMENT SUPPLIERS ALONG WITH COORDINATING THE LOCATIONS AND DETAILS FOR THESE ITEMS PRIOR TO FABRICATION OR ERECTION OF THE SUPPORTING STRUCTURE. ANY CONFLICTS BETWEEN THESE ITEMS AND THE BUILDING STRUCTURE IS TO BE BROUGHT TO THE ATTENTION OF THE STUCTURAL ENGINEER OF RECORD FOR RESOLUTION.

G-6 THE STRUCTURAL DRAWINGS GOVERN THE WORK FOR STRUCTURAL FEATURES, UNLESS OTHERWISE NOTED. DIMENSIONS SHOWN ON PLANS AND DETAILS ARE TO GOVERN THE STRUCTURAL WORK. THE CONTRACTOR IS TO REFER TO THE ARCHITECTURAL DRAWINGS FOR DIMENSIONS AND DETAILS NOT PROVIDED.

G-7 IN CASE OF CONFLICT BETWEEN THE GENERAL NOTES, SPECIFICATIONS, AND DRAWINGS, THE MOST RIGID REQUIREMENTS AS DETERMINED BY THE STRUCTURAL ENGINEER OF RECORD WILL GOVERN.

G-8 WORK NOT INDICATED ON A PART OF THE DRAWINGS, BUT REASONABLY IMPLIED TO BE SIMILAR TO THAT SHOWN AT CORRESPONDING LOCATIONS, IS TO BE REPEATED.

G-9 EXISTING BUILDING INFORMATION SHOWN IS BASED UPON EXISTING BUILDING DOCUMENTS AND/OR FROM FIELD OBSERVATION. THE INFORMATION CONTAINED HEREIN MAY REQUIRE ADJUSTMENTS AND/OR MODIFICATIONS TO CONFORM TO EXISTING CONDITIONS. THE CONTRACTOR SHALL FIELD VERIFY ALL EXISTING BUILDING INFORMATION SHOWN (DIMENSIONS, ELEVATIONS, ETC) AND NOTIFY THE STRUCTURAL ENGINEER OF RECORD OF ANY DISCREPANCIES PRIOR TO FABRICATION OF ANY STRUCTURAL COMPONENT.

G-10 DETAILS DESIGNATED AS "TYPICAL DETAILS," APPLY GENERALLY TO THE DRAWINGS IN AREAS WHERE CONDITIONS ARE SIMILAR TO THOSE DESCRIBED IN THE DETAILS.

G-11 SHOP DRAWINGS:

A. SHOP DRAWINGS FOR ALL MATERIALS ARE TO BE SUBMITTED TO THE ENGINEER FOR REVIEW PRIOR TO THE START OF FABRICATION OR COMMENCEMENT OF WORK PER THE PROJECT SPECIFICATIONS.

B. SHOP DRAWINGS MUST BE CHECKED AND STAMPED BY THE CONTRACTOR PRIOR TO SUBMISSION. THE CONTRACTOR'S STAMP OF APPROVAL WILL CONSTITUTE CERTIFICATION THAT THE CONTRACTOR HAS VERIFIED ALL FIELD MEASUREMENTS, CONSTRUCTION CRITERIA, MATERIALS AND SIMILAR DATA AND HAS CHECKED EACH DRAWING FOR COMPLETENESS,COORDINATION, AND COMPLIANCE WITH THE CONTRACT DOCUMENTS.

C. REPRODUCTION OF ANY PORTION OF THE STRUCTURAL CONTRACT DRAWINGS FOR SUBMITTAL AS SHOP DRAWINGS IS PROHIBITED.

D. CHANGES TO SHOP DRAWINGS THAT ARE RE-SUBMITTED MUST BE CLOUDED OR SOMEHOW INDICATE THAT A CHANGE HAS BEEN MADE TO PREVIOUSLY ISSUED AND REVIEWED DRAWING.

E. THE CONTRACTOR IS TO PROVIDE THE ENGINEER WITH WRITTEN NOTICE OF DEVIATIONS OF ANY TYPE FROM THE REQUIREMENTS OF THE CONSTRUCTION DOCUMENTS. THE NOTICE MUST BE RECEIVED PRIOR TO SHOP DRAWING SUBMITTAL. THE CONTRACTOR REMAINS LIABLE FOR ANY DEVIATION UNLESS REVIEWED BY THE ENGINEER AND ACKNOWLEDGED IN WRITING, PRIOR TO THE RECEIPT OF THE SHOP DRAWINGS.

FOUNDATIONS

F-1 FOUNDATIONS HAVE BEEN DESIGNED AND ARE TO BE CONSTRUCTED IN ACCORDANCE WITH CRITERIA ESTABLISHED BY GEODESIGN, INC. IN THEIR GEOTECH REPORT PREPARED FOR THIS PROJECT DATED FEBRUARY 10, 2011.THIS REPORT IN CONSIDERED PART OF THESE CONSTRUCTION DOCUMENTS.

F-2 FOUNDATIONS ARE TO BE PLACED ON COMPACTED FILL CONFORMING TO THE GEOTECHNICAL REPORT. THE CONTRACTOR SHALL BE RESPONSIBLE FOR COMPLETE EXCAVATION, REMOVAL AND REPLACEMENT OF THE UNSUITABLE ORGANICS FROM BELOW, AND WITHIN THE INFLUENCE OF, THE FOOTINGS. MINIMUM HORIZONTAL EXCAVATION LIMITS EXTEND FROM ONE FOOT BEYOND THE FOOTING AND THEN AT A 1V:1H DOWNWARD SLOPE UNTIL THE SUITABLE NATURAL SAND LAYER IS ENCOUTERED AS DETERMINED BY THE CONTRACTOR'S GEOTECHNICAL ENGINEER AND BY THE DEPARTMENT. WHERE THESE HORIZONTAL LIMITS INTERSECT THE SHEET PILING LEFT IN PLACE (RAILROAD), NO FURTHER EXCAVATION IS REQUIRED IN THAT DIRECTION. TO MINIMIZE THE HORIZONTAL EXTEND OF EXCAVATION IN OTHER DIRECTIONS, THE FOOTINGS MAY BE LOWERED TO BEAR ON THE UNDERLYING NATURAL DEPOSIT.

AFTER EXCAVATION OF THE ORGANICS, THE CONTRACTOR SHALL PROOF-ROLL THE SUBGRADE WITH MULTIPLE OVERLAPPING PASSES OF A SMOOTH DRUM ROLLER OR BY STATIC PROOF-ROLLING. IF STATIC PROOF-ROLLING IS PERFORMED, DENSE-GRADE AGGREGATE [E.G. PERVIOUS STRUCTURAL BACKFILL (PSB)] SHALL BE PLACED AND COMPACTED WITH STATIC ROLLING OVER THE PREPARED SUBGRADE. EXCAVATED UNSUITABLE SOILS SHALL BE REPLACED WITH GRANULAR FILL (GF), COMPACTED GRANULAR FILL (CGF), OR CRUSHED STONE TO THE SAME MINIMUM HORIZONTAL LIMITS EXPRESSED ABOVE, COMPACTED TO A MINIMUM OF 95-PERCENT OF THE CHOSEN MATERIALS MAXIMUM DENSITY.

COMPACATED GRANULAR FILL SHALL BE USED IF THE EXCAVATED DEPTH BELOW BFE IS GREATER THAN 2 FEET, GRANULAR FILL SHALL BE USED IF THE DEPTH IS LESS THAN 2 FEET, AND PERVIOUS STRUCTURE BACKFILL SHALL BE USED IF STATIC PROOF-ROLLING IS EMPLOYED. CGF, GF, AND PSB SHALL BE PLACED IN ACCORDANCE WITH THE DEPARTMENT'S STANDARD SPECIFICATIONS, FORM 816, SECTIONS 2.14, 2.13, AND 2.16 RESPECTIVELY. PAYMENT FOR THE REMOVAL OF UNSUITABLE SOILS AND THE PLACING AND COMPACTION OF APPROPRIATE MATERIALS AS DESCRIBED ABOVE FOR THE PLATFORM, TOWER AND STAIR CONSTRUCTION SHALL BE INCLUDED IN THE LUMP SUM "RAIL FACILITY UPGRADE".

1

F-3 NOT USED.

F-4 ELEVATIONS SHOWN ON THE DRAWINGS AT WHICH FOUNDATIONS BEAR ARE APPROXIMATE AND MAY VARY TO SUIT SUBSURFACE SOIL CONDITIONS. ANY BOTTOM OF FOOTING ELEVATIONS AT FOOTING STEP LOCATIONS, SHOWN ON THE DRAWINGS, ARE TO BE FIELD VERIFIED AND ADJUSTED AS REQUIRED SO THAT FOUNDATIONS BEAR ON MATERIAL OF AT LEAST THE CAPACITY NOTED ABOVE.

FOUNDATIONS (CONTINUE)

F-5 PRIOR TO PLACING CONCRETE, ANY WATER PRESENT IS TO BE PUMPED OUT FROM THE BOTTOM OF EXCAVATIONS TO A LEVEL APPROVED BY THE GEOTECHNICAL ENGINEER.

F-6 NO BACKFILLING AGAINST WALLS IS TO BE DONE UNTIL THE SLABS AT THE TOP AND BOTTOM HAVE BEEN PLACED OR ADEQUATE SHORING HAS BEEN PROVIDED. WALLS AND GRADE BEAMS HAVING BACKFILL AGAINST BOTH SIDES ARE TO HAVE BACKFILL PLACED ON BOTH SIDES SIMULTANEOUSLY.

REINFORCED CONCRETE

C-1 MIXING, TRANSPORTING, PLACING AND TESTING OF CONCRETE IN ACCORDANCE WITH ACI 301.

C-2 PRIOR TO CONCRETE PLACEMENT, THE CONTRACTOR MUST SUBMIT CONCRETE MIX DESIGNS FOR EACH TYPE OF CONCRETE TO BE USED, PREPARED IN ACCORDANCE WITH THE PROJECT SPECIFICATIONS TO STRUCTURAL ENGINEER OF RECORD FOR REVIEW.

C-3 THE SLUMP AT POINT OF PLACEMENT IS NOT TO EXCEED 4"(+/-) 1" AND THE WATER/CEMENT RATIO IS NOT TO EXCEED 0.45. IF ADDITIONAL SLUMP 8" IS DESIRED FOR PUMPING, A SUPER-PLASTICIZER ADMIXTURE MAY BE ADDED.
A. AIR ENTRAINMENT: 5% TO 7% IN CONCRETE EXPOSED TO FREEZE/THAW.

C-4 REINFORCEMENT IS TO BE DETAILED, FABRICATED, AND PLACED IN ACCORDANCE WITH THE ACI "DETAILING MANUAL NO. SP-66" (LATEST EDITION).

C-5 PROVIDE ADEQUATE CONCRETE COVER IN ACCORDANCE WITH THE REQUIREMENTS AS SET FORTH BY ACI 318.

C-6 REINFORCEMENT IS TO BE SECURELY HELD IN PLACE WHILE PLACING CONCRETE. IF REQUIRED, ADDITIONAL BARS, STIRRUPS, OR CHAIRS WILL BE PROVIDED BY THE CONTRACTOR TO FURNISH SUPPORT FOR ALL BARS WHERE NECESSARY DURING CONSTRUCTION.

C-7 CONTINUOUS REINFORCING BARS TO BE TURNED AND LAPPED AT CORNERS AND INTERSECTIONS OF WALLS AND FOOTINGS. LAP SPLICES TO BE CLASS B TENSION SPLICES PER ACI 318. HOOKED BARS TO HAVE STANDARD ACI HOOKS UNO.

C-8 CONTINUOUS TOP BARS TO BE SPLICED AT MID-SPAN. CONTINUOUS BOTTOM BARS TO BE SPLICED AT CENTERLINE OF SUPPORTS (OR AS SHOWN ON DETAILS).

C-9 WELDED WIRE REINFORCEMENT IS TO BE SUPPLIED IN FLAT SHEETS ONLY. LAP WELDED WIRE REINFORCEMENT TWO FULL MESH LENGTHS (OR 6" MIN) AT SPLICES AND WIRE TOGETHER. WELDED WIRE REINFORCEMENT TO BE PLACED 1/4 TH THE SLAB THICKNESS FROM THE TOP OF SLABS, UON.

C-10 SLEEVES, INSERTS, MECHANICAL OPENINGS, CONDUITS, PIPES, RECESSES, DEPRESSIONS, CURBS AND OTHER EMBEDDED ITEMS TO BE PROVIDED FOR AS SHOWN ON THE ARCHITECTURAL, MECHANICAL AND ELECTRICAL DRAWINGS AND AS REQUIRED BY EQUIPMENT MANUFACTURERS. INSTALLATION OF THESE ITEMS TO BE COORDINATED AND PROVIDED FOR PRIOR TO PLACING CONCRETE.

C-11 PROVIDE BLOCK-OUTS AS REQUIRED FOR PRE-CAST CONCRETE PANEL ANCHORAGE. FILL WITH CONCRETE ONCE PANEL IS IN PLACE.

PRE-CAST CONCRETE

PC-1 PRE-CAST CONCRETE UNITS MUST BE DESIGNED AND CONSTRUCTED IN ACCORDANCE WITH THE PRE-CAST CONCRETE INSTITUTE (PCI) DESIGN HANDBOOK AND ACI 318 (LATEST EDITIONS).

PC-2 PRE-CAST TO PRE-CAST AND PRE-CAST TO FOUNDATION CONNECTIONS, INCLUDING ANCHOR RODS, ARE TO BE DESIGNED AND DETAILED BY THE PRE-CAST MANUFACTURER. ALL LOOSE STEEL PLATES, CLIP-ANGLES, SEAT BRACKETS AND ANGLES, ANCHORS, DOWELS, CLAMPS, HANGERS, AND OTHER MISCELLANEOUS STEEL SHAPES NECESSARY FOR INSTALLING AND SECURING PRE-CAST UNITS OR PANELS TO THE BUILDING STRUCTURAL SYSTEM MUST BE PROVIDED BY THE PRE-CAST MANUFACTURER.

PC-3 PRIOR TO FABRICATION, THE PRE-CAST MANUFACTURER IS TO SUBMIT TO THE STRUCTURAL ENGINEER OF RECORD FOR REVIEW THE FOLLOWING, PREPARED BY OR UNDER THE SUPERVISION OF A PROFESSIONAL ENGINEER REGISTERED IN THE STATE OF WHICH THE PROJECT IS CONSTRUCTED AND BEARING THE SEAL OF THE PROFESSIONAL ENGINEER:
A. DESIGN CALCULATIONS OF PRE-CAST UNITS, INTEGRATED SUPPORT MEMBERS AND CONNECTIONS.
B. SHOP DRAWINGS SHOWING ERECTION PLANS, DIMENSIONS, REINFORCING REQUIREMENTS, CONSTRUCTION DETAILS, DESIGN CRITERIA, LOAD CAPACITIES, OPENING SIZES AND LOCATIONS AND FOUNDATION LOADS.

PC-4 PRE-CAST CONCRETE STAIRS ARE TO BE SOLID UNITS DESIGNED BY THE PRE-CAST MANUFACTURER IN ACCORDANCE WITH LOADINGS PROVIDED. REFERENCE THE ARCHITECTURAL DRAWINGS FOR DIMENSIONS, NOSING AND RAILING REQUIREMENTS, ETC.

PC-5 STRUCTURAL STEEL ANGLES, PLATES AND BOLTS TO HOT DIPPED GALVANIZED AFTER FABRICATION. ALL PERMANENTLY EXPOSED CONNECTION PLATES TO BE 304L OR 316L STAINLESS STEEL.

PC-6 ALL OPENINGS (SHOP AND FIELD CUT) MUST BE SHOWN ON FINAL APPROVED SHOP DRAWINGS. FIELD CUT OPENINGS ARE NOT PERMITTED UNLESS SPECIFICALLY SHOWN ON THE SHOP DRAWINGS AND ACCOUNTED FOR IN THE DESIGN BY THE PRE-CAST MANUFACTURER.

ADDENDUM NO. 1

REV.	DATE	REVISION DESCRIPTION	SHEET NO.
1	8/24/2018	REMOVE NOTE F-3	06.03.A1

THE INFORMATION, INCLUDING ESTIMATED QUANTITIES OF WORK, SHOWN ON THESE SHEETS IS BASED ON LIMITED INVESTIGATIONS BY THE STATE AND IS IN NO WAY WARRANTED TO INDICATE THE CONDITIONS OF ACTUAL QUANTITIES OF WORK WHICH WILL BE REQUIRED.

Plotted Date: 8/25/2017

DESIGNER/DRAFTER: KR-M
CHECKED BY: MDD
SCALE AS NOTED

STATE OF CONNECTICUT
DEPARTMENT OF TRANSPORTATION

Filename: FD_MSH_STR_0027_0059_S-001_A1.dgn

SIGNATURE/BLOCK:

Michael Baker INTERNATIONAL
500 ENTERPRISE DRIVE
SUITE 2B
ROCKY HILL, CT. 06067
Phone: (860) 563-3044
MBAKERINTL.COM

PROJECT TITLE: SHORE LINE EAST RAILROAD STATIONS

TOWN: CLINTON

DRAWING TITLE: GENERAL NOTES

PROJECT NO. 310-0059
DRAWING NO. S-001
SHEET NO. 06.03.A1

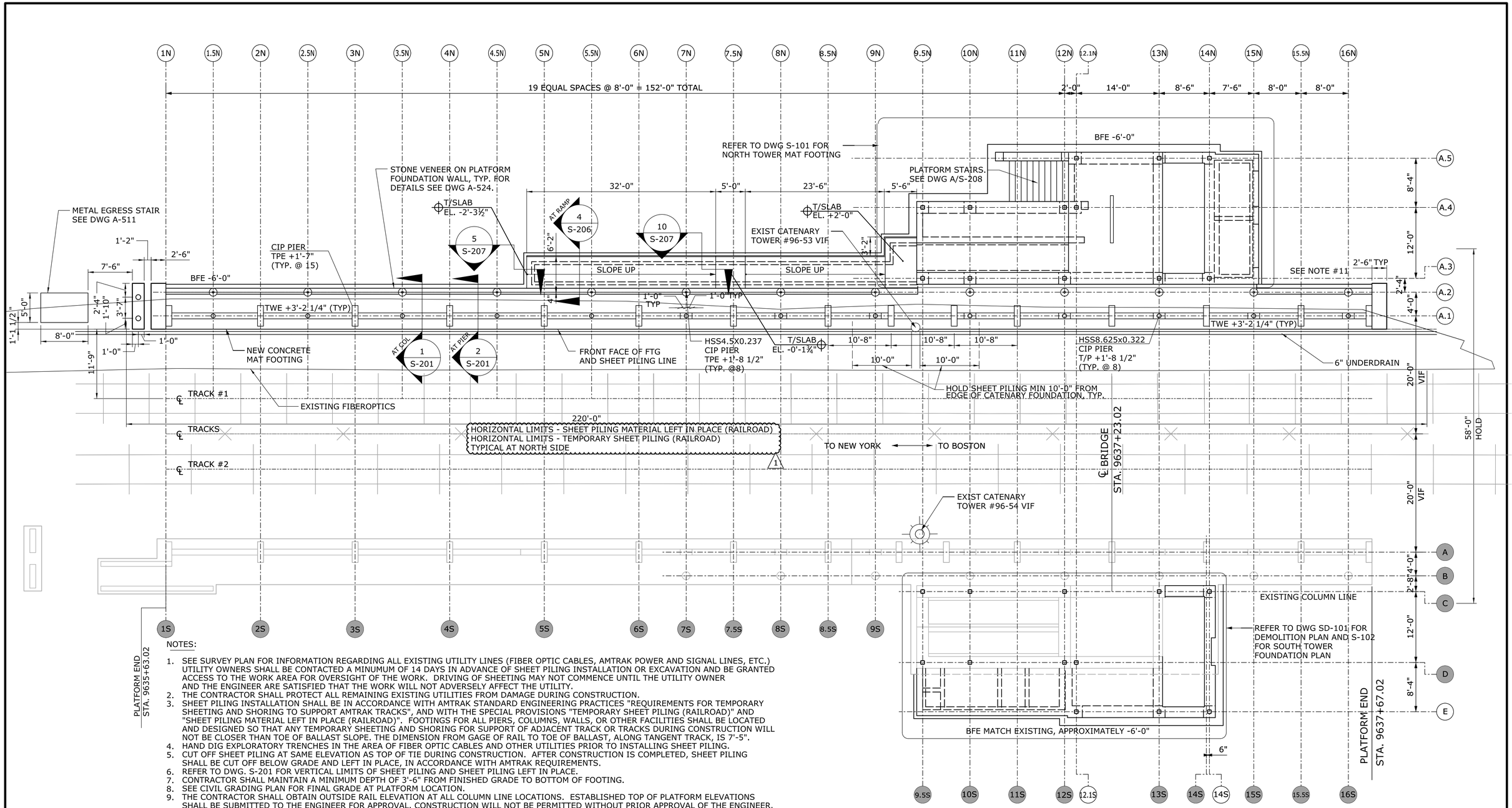

OVERALL FOUNDATION PLAN

SCALE: 1/8"=1'-0"

NOTES:

1. SEE SURVEY PLAN FOR INFORMATION REGARDING ALL EXISTING UTILITY LINES (FIBER OPTIC CABLES, AMTRAK POWER AND SIGNAL LINES, ETC.) UTILITY OWNERS SHALL BE CONTACTED A MINUMUM OF 14 DAYS IN ADVANCE OF SHEET PILING INSTALLATION OR EXCAVATION AND BE GRANTED ACCESS TO THE WORK AREA FOR OVERSIGHT OF THE WORK. DRIVING OF SHEETING MAY NOT COMMENCE UNTIL THE UTILITY OWNER AND THE ENGINEER ARE SATISFIED THAT THE WORK WILL NOT ADVERSELY AFFECT THE UTILITY.
2. THE CONTRACTOR SHALL PROTECT ALL REMAINING EXISTING UTILITIES FROM DAMAGE DURING CONSTRUCTION.
3. SHEET PILING INSTALLATION SHALL BE IN ACCORDANCE WITH AMTRAK STANDARD ENGINEERING PRACTICES "REQUIREMENTS FOR TEMPORARY SHEETING AND SHORING TO SUPPORT AMTRAK TRACKS", AND WITH THE SPECIAL PROVISIONS "TEMPORARY SHEET PILING (RAILROAD)" AND "SHEET PILING MATERIAL LEFT IN PLACE (RAILROAD)". FOOTINGS FOR ALL PIERS, COLUMNS, WALLS, OR OTHER FACILITIES SHALL BE LOCATED AND DESIGNED SO THAT ANY TEMPORARY SHEETING AND SHORING FOR SUPPORT OF ADJACENT TRACK OR TRACKS DURING CONSTRUCTION WILL NOT BE CLOSER THAN TOE OF BALLAST SLOPE. THE DIMENSION FROM GAGE OF RAIL TO TOE OF BALLAST, ALONG TANGENT TRACK, IS 7'-5".
4. HAND DIG EXPLORATORY TRENCHES IN THE AREA OF FIBER OPTIC CABLES AND OTHER UTILITIES PRIOR TO INSTALLING SHEET PILING.
5. CUT OFF SHEET PILING AT SAME ELEVATION AS TOP OF TIE DURING CONSTRUCTION. AFTER CONSTRUCTION IS COMPLETED, SHEET PILING SHALL BE CUT OFF BELOW GRADE AND LEFT IN PLACE, IN ACCORDANCE WITH AMTRAK REQUIREMENTS.
6. REFER TO DWG. S-201 FOR VERTICAL LIMITS OF SHEET PILING AND SHEET PILING LEFT IN PLACE.
7. CONTRACTOR SHALL MAINTAIN A MINIMUM DEPTH OF 3'-6" FROM FINISHED GRADE TO BOTTOM OF FOOTING.
8. SEE CIVIL GRADING PLAN FOR FINAL GRADE AT PLATFORM LOCATION.
9. THE CONTRACTOR SHALL OBTAIN OUTSIDE RAIL ELEVATION AT ALL COLUMN LINE LOCATIONS. ESTABLISHED TOP OF PLATFORM ELEVATIONS SHALL BE SUBMITTED TO THE ENGINEER FOR APPROVAL. CONSTRUCTION WILL NOT BE PERMITTED WITHOUT PRIOR APPROVAL OF THE ENGINEER.
10. REFER TO ARCHITECTURAL DRAWINGS FOR APPROXIMATE TOP OF RAIL ELEVATIONS ALONG PLATFORM.
11. NEW COLUMN LINE A.3 SHOULD BE PARALLEL AND ALIGNED WITH EXISTING COLUMN LINE "C" TO ENSURE THE BRIDGE BEARING LOCATIONS ARE TRUE.
12. TOP OF RAIL ELEVATION USED FOR NORTH TOWER IS 26.17'. THIS IS DATUM ELEVATION 0'-0". ALL ELEVATIONS ARE REFERENCED FROM THIS ELEVATION.
13. CONTRACTOR SHALL PROVIDE SUPPORT OF EXCAVATION THAT IS CONTINUIOUS AND PREVENTS EXCAVATION FROM UNDERMINING THE CATENARY FOUNDATION.

ADDENDUM NO. 1

REV.	DATE	REVISION DESCRIPTION	SHEET NO.
1	8/24/2018	REVISED CALLOUT	06.05.A1

THE INFORMATION, INCLUDING ESTIMATED QUANTITIES OF WORK, SHOWN ON THESE SHEETS IS BASED ON LIMITED INVESTIGATIONS BY THE STATE AND IS IN NO WAY WARRANTED TO INDICATE THE CONDITIONS OF ACTUAL QUANTITIES OF WORK WHICH WILL BE REQUIRED.

Plotted Date: 8/24/2017

DESIGNER/DRAFTER: KR-M
CHECKED BY: MDD
SCALE AS NOTED

STATE OF CONNECTICUT
DEPARTMENT OF TRANSPORTATION

Filename: FD_MSH_STR_0027_0059_S-100.dgn

SIGNATURE/BLOCK:

Michael Baker INTERNATIONAL
500 ENTERPRISE DRIVE
SUITE 2B
ROCKY HILL, CT. 06067
Phone: (860) 563-3044
MBAKERINTL.COM

PROJECT TITLE: SHORE LINE EAST RAILROAD STATIONS

TOWN: CLINTON

DRAWING TITLE: FOUNDATION

PROJECT NO. 310-0059
DRAWING NO. S-100
SHEET NO. 06.05.A1

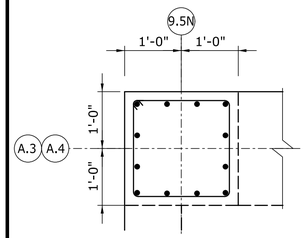

PLAN DETAIL - P1 (A / S-101)
SCALE: 3/4" = 1'-0"

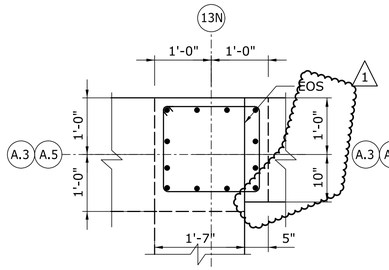

PLAN DETAIL - P1 (B / S-101)
SCALE: 3/4" = 1'-0"

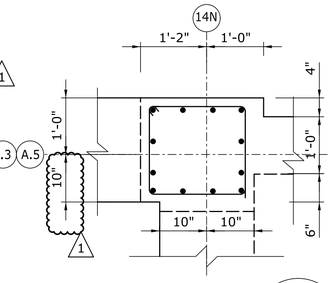

PLAN DETAIL - P1 (C / S-101)
SCALE: 3/4" = 1'-0"

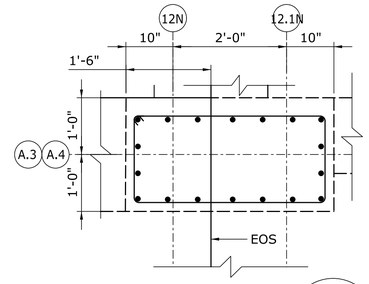

PLAN DETAIL - P3 (D / S-101)
SCALE: 3/4" = 1'-0"

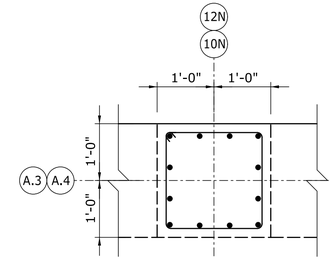

PLAN DETAIL - P1 (E / S-101)
SCALE: 3/4" = 1'-0"

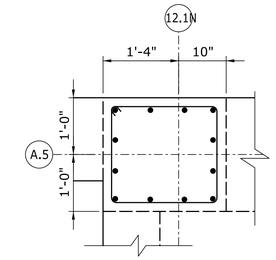

PLAN DETAIL - P2 (F / S-101)
SCALE: 3/4" = 1'-0"

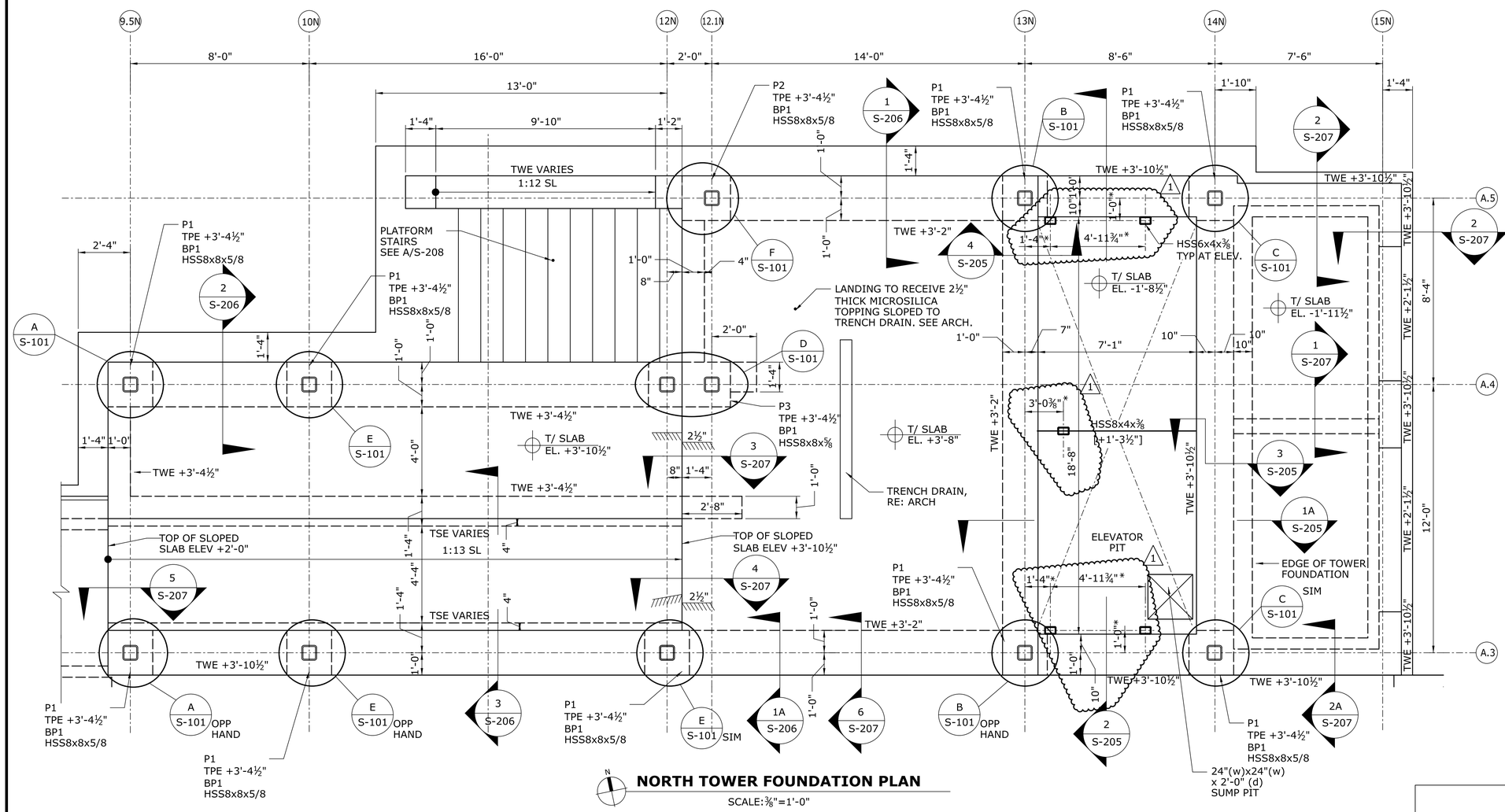

NORTH TOWER FOUNDATION PLAN
SCALE: ⅜"=1'-0"

CONCRETE PIER SCHEDULE

PIER MARK	PIER SIZE		LONGITUDINAL REINF		CLOSED TIE REINF	
	LENGTH	WIDTH	QUANTITY	BAR SIZE	BAR SIZE	SPACING
P1	24"	24"	12	#7	#3	12" OC
P2	24"	26"	12	#7	#3	12" OC
P3	24"	44"	18	#7	#3	12" OC

NOTES:

1. REFER TO TYPICAL PIER DETAIL 5/S-204 FOR MORE INFO.

NORTH TOWER FOUNDATION PLAN NOTES:

1. REFER TO GENERAL NOTES, KEYS & ABBREVIATIONS AND SPECIFICATIONS FOR ADDITIONAL INFO.
2. REFER TO OVERALL FOUNDATION PLAN SHEET S-100 FOR NOTES, UNO.
3. FOR MAT FOOTING PLAN DIMENSIONS REFER TO OVERALL FOUNDATION PLAN, DRAWING S-100.
4. "BP-1" INDICATES BASE PLATE. ALL ANCHOR RODS, NUTS AND WASHERS TO BE HOT DIPPED GALVANIZED. REFER TO DETAIL 3/S-501 FOR MORE INFO.
5. ALL STEEL COLUMNS ARE HSS8x8x⅝.
6. ALL EXPOSED CONCRETE TO BE RUBBED FINISHED, UNO.
7. TOP OF RAIL ELEVATION USED FOR NORTH TOWER IS 26.17'. THIS IS THE DATUM ELEVATION 0'-0". ALL ELEVATIONS ARE REFERENCED FROM THIS ELEVATION
8. * INDICATES DIMENSION IS TO BE COORDINATED WITH ELEVATOR MANUFACTURER

ADDENDUM NO. 1

REV.	DATE	REVISION DESCRIPTION	SHEET NO.
1	8/24/2018	REVISED TOWER SUPPORT STEEL	06.06.A1

THE INFORMATION, INCLUDING ESTIMATED QUANTITIES OF WORK, SHOWN ON THESE SHEETS IS BASED ON LIMITED INVESTIGATIONS BY THE STATE AND IS IN NO WAY WARRANTED TO INDICATE THE CONDITIONS OF ACTUAL QUANTITIES OF WORK WHICH WILL BE REQUIRED.

Plotted Date: 8/25/2017

DESIGNER/DRAFTER: KR-M
CHECKED BY: MDD
SCALE AS NOTED

STATE OF CONNECTICUT
DEPARTMENT OF TRANSPORTATION

Filename: FD_MSH_STR_0027_0059_S-101_A1.dgn

SIGNATURE/BLOCK:

STATE OF CONNECTICUT
NORTH RELEASE
No. 19079
LICENSED
PROFESSIONAL ENGINEER

Michael Baker
INTERNATIONAL
500 ENTERPRISE DRIVE
SUITE 2B
ROCKY HILL, CT. 06067
Phone: (860) 563-3044
MBAKERINTL.COM

PROJECT TITLE:
SHORE LINE EAST RAILROAD STATIONS

TOWN: **CLINTON**

DRAWING TITLE: **NORTH TOWER FOUNDATION PLAN**

PROJECT NO. 310-0059
DRAWING NO. S-101
SHEET NO. 06.06.A1

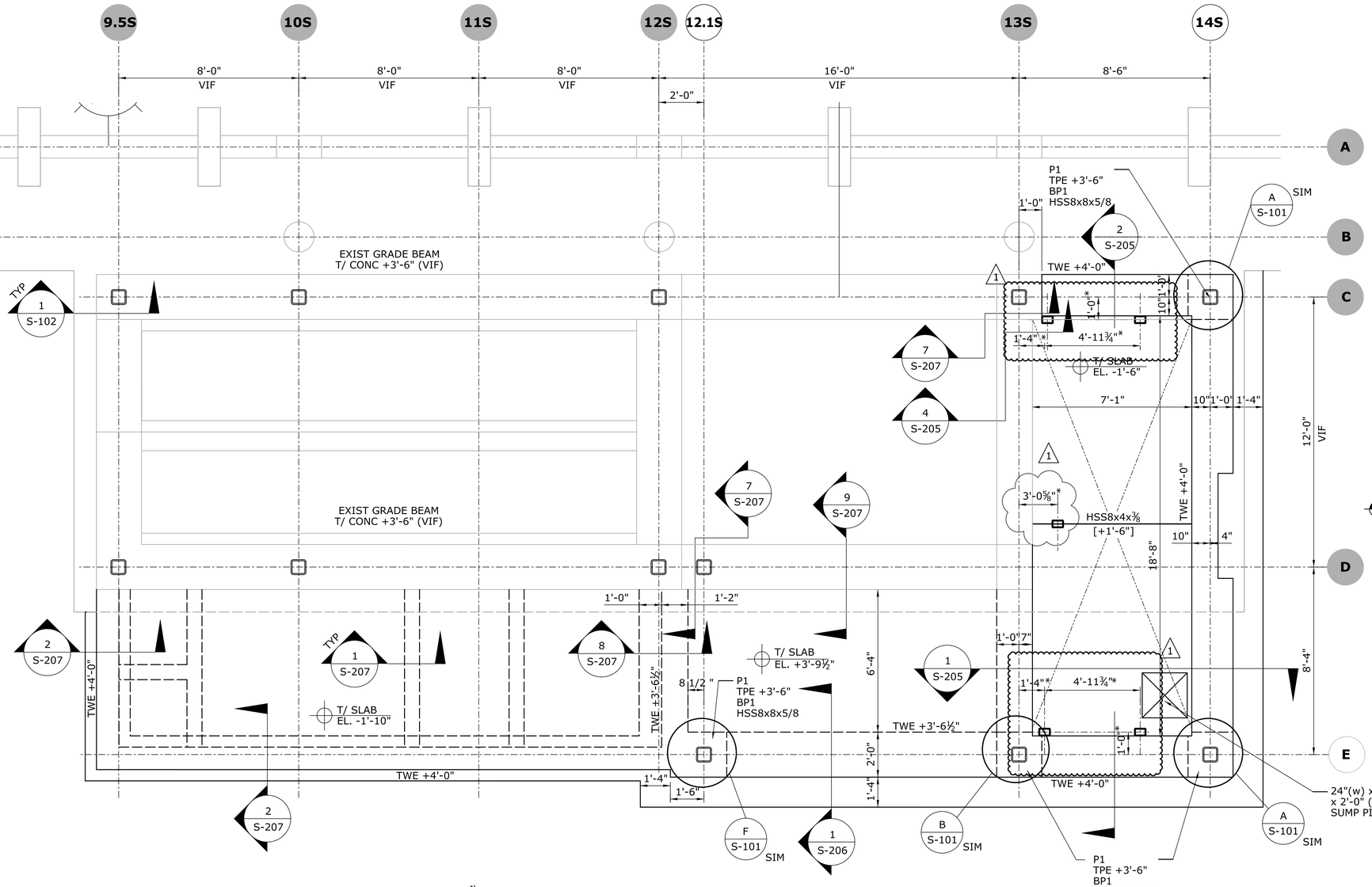

SOUTH TOWER FOUNDATION PLAN

SCALE: ⅜"=1'-0"

SOUTH TOWER FOUNDATION PLAN NOTES:

1. REFER TO GENERAL NOTES, KEYS & ABBREVIATIONS AND SPECIFICATIONS FOR ADDITIIONAL INFO.
2. REFER TO OVERALL FOUNDATION PLAN SHEET S-100 FOR NOTES, UON.
3. "BP-1" INDICATES BASE PLATE. ALL ANCHOR RODS, NUTS AND WASHERS TO BE HOT DIPPED GALVANIZED. REFER TO DETAIL 3/S-501 FOR MORE INFO.
4. ALL STEEL COLUMNS ARE HSS8x8x⅝.
5. SHADED COLUMN BUBBLES INDICATE EXIST COLUMN LINES.
6. TOP OF RAIL ELEVATION USED FOR SOUTH TOWER = +26.13'. THIS IS THE DATUM ELEVATION = 0'-0". ALL ELEVATIONS ARE REFERENCED FROM THIS ELEVATION.
7. * INDICATES DIMENSION IS TO BE COORDINATED WITH ELEVATOR MANUFACTURER.

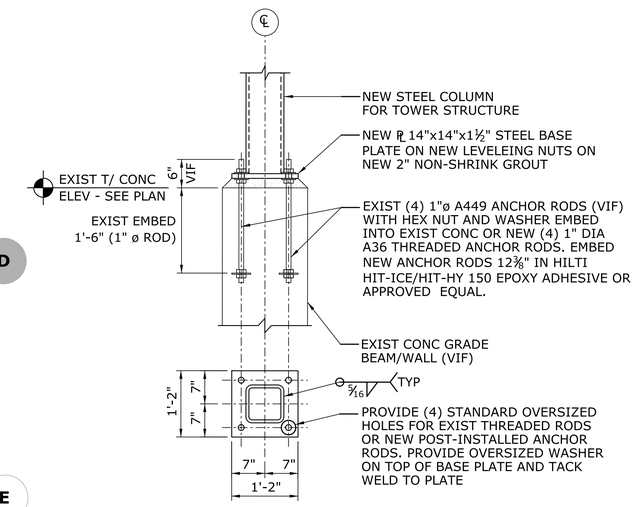

PLAN VIEW

NOTES:
1. ALL NEW STEEL NUTS, WASHERS, AND ANCHOR RODS TO BE GALV.
2. EXIST ANCHOR RODS ARE ON GRID LINES 12S, 13S, AND 14S. INSTALL NEW ANCHOR RODS AT GRID LINES 9.5S AND 10S.

TYP NEW STEEL COL CONN TO EXIST FND

SCALE: ⅜"=1'-0"

1 / S-102

ADDENDUM NO. 1

REV.	DATE	REVISION DESCRIPTION	SHEET NO.
1	8/24/2018	REVISED TOWER SUPPORT STEEL	06.07.A1

THE INFORMATION, INCLUDING ESTIMATED QUANTITIES OF WORK, SHOWN ON THESE SHEETS IS BASED ON LIMITED INVESTIGATIONS BY THE STATE AND IS IN NO WAY WARRANTED TO INDICATE THE CONDITIONS OF ACTUAL QUANTITIES OF WORK WHICH WILL BE REQUIRED.

Plotted Date: 8/24/2017

DESIGNER/DRAFTER: KR-M
CHECKED BY: MDD
SCALE AS NOTED

STATE OF CONNECTICUT
DEPARTMENT OF TRANSPORTATION

Filename: FD_MSH_STR_0027_0059_S-102.dgn

SIGNATURE/BLOCK:

Michael Baker INTERNATIONAL
500 ENTERPRISE DRIVE
SUITE 2B
ROCKY HILL, CT. 06067
Phone: (860) 563-3044
MBAKERINTL.COM

PROJECT TITLE: SHORE LINE EAST RAILROAD STATIONS

TOWN: CLINTON

DRAWING TITLE: SOUTH TOWER FOUNDATION PLAN

PROJECT NO. 310-0059
DRAWING NO. S-102
SHEET NO. 06.07.A1

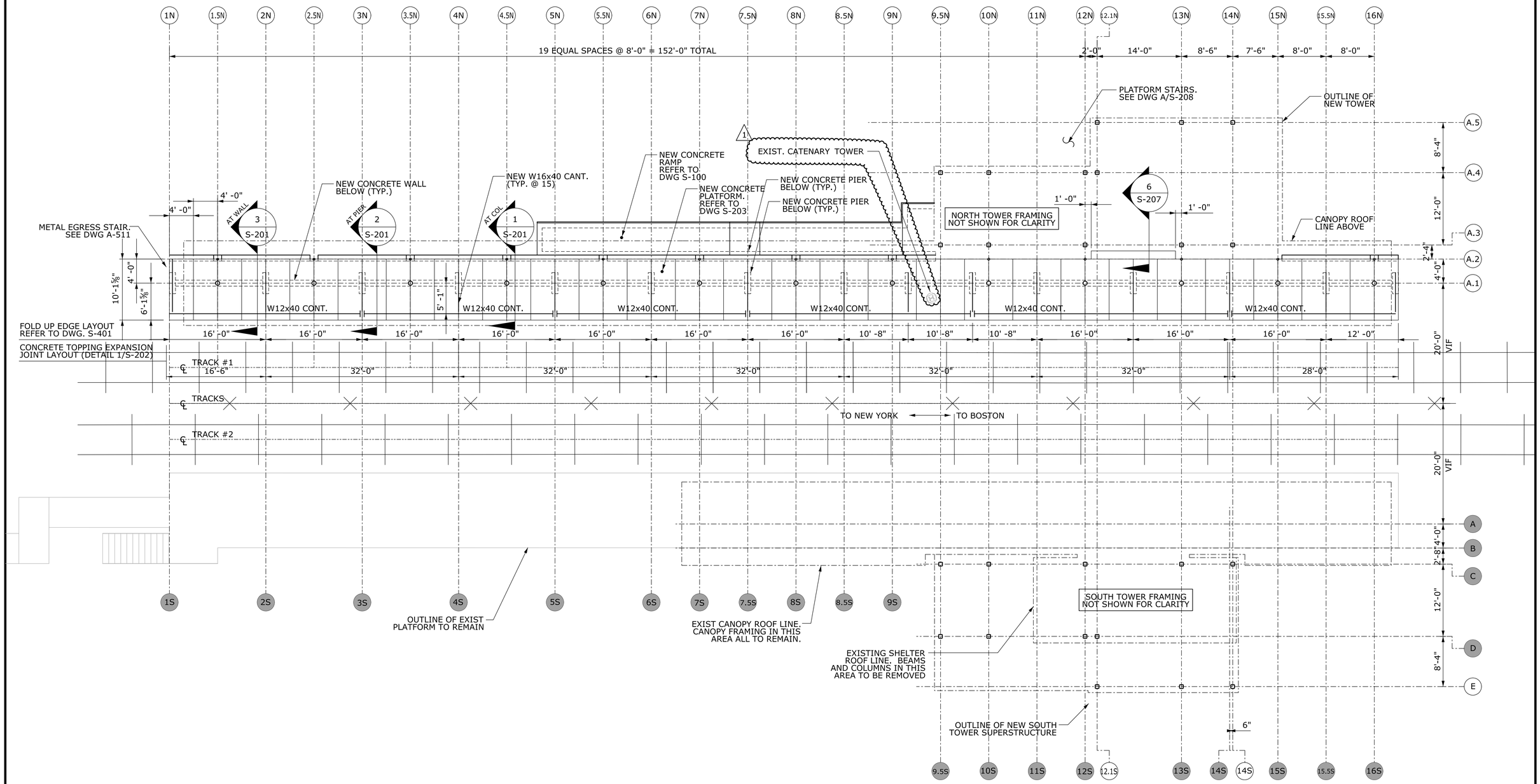

ADDENDUM NO. 1

REV.	DATE	REVISION DESCRIPTION	SHEET NO.
1	8/24/2018	SHOW EXIST. CATERNARY TOWER	06.08.A1

THE INFORMATION, INCLUDING ESTIMATED QUANTITIES OF WORK, SHOWN ON THESE SHEETS IS BASED ON LIMITED INVESTIGATIONS BY THE STATE AND IS IN NO WAY WARRANTED TO INDICATE THE CONDITIONS OF ACTUAL QUANTITIES OF WORK WHICH WILL BE REQUIRED.

Plotted Date: 8/24/2017

DESIGNER/DRAFTER: -

CHECKED BY: -

SCALE AS NOTED

STATE OF CONNECTICUT
DEPARTMENT OF TRANSPORTATION

Filename: FD_MSH_STR_0027_0059_S-103.dgn

SIGNATURE/ BLOCK:

STATE OF CONNECTICUT · KEITH W. DELESKI · No. 19079 · LICENSED PROFESSIONAL ENGINEER

Michael Baker INTERNATIONAL
500 ENTERPRISE DRIVE
SUITE 2B
ROCKY HILL, CT. 06067
Phone: (860) 563-3044
MBAKERINTL.COM

PROJECT TITLE:
SHORE LINE EAST RAILROAD STATIONS

TOWN: **CLINTON**

DRAWING TITLE: **PLATFORM FRAMING PLAN**

PROJECT NO. **310-0059**

DRAWING NO. **S-103**

SHEET NO. **06.08.A1**

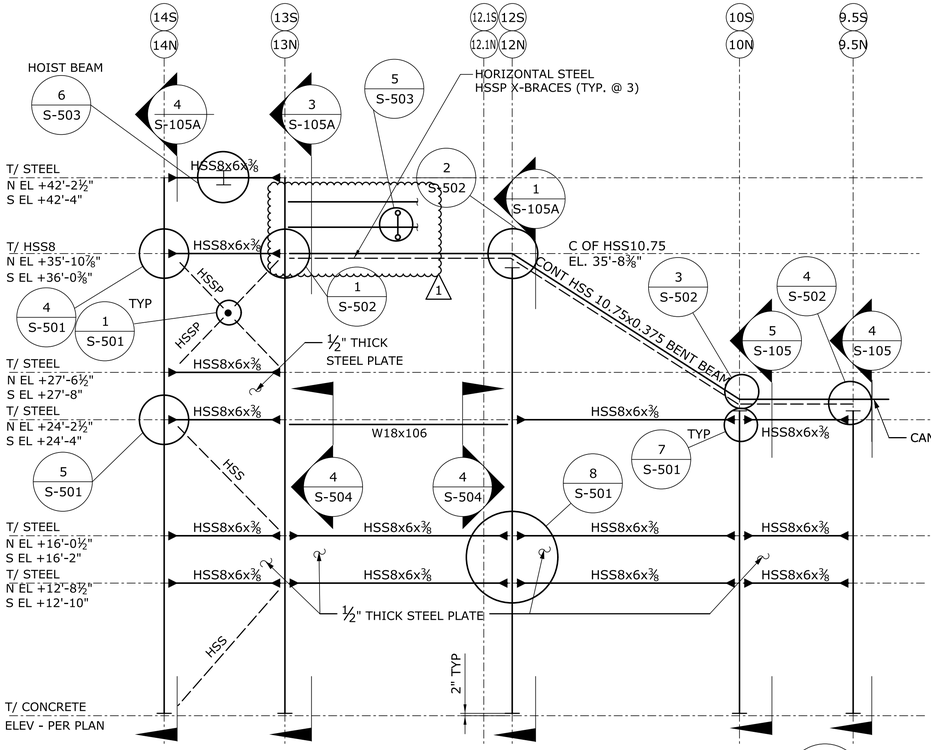

TOWER FRAME ELEVATION ALONG LINES "A.3" & "C" — 1 / S-105

SCALE: 3/16" = 1'-0"

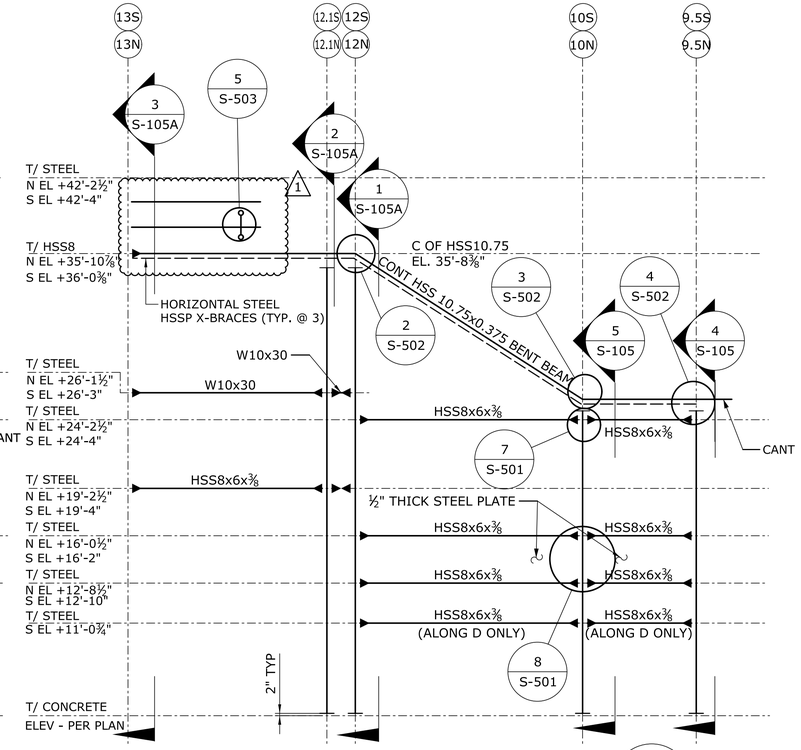

TOWER FRAME ELEVATION ALONG LINES "A.4" & "D" — 2 / S-105

SCALE: 3/16" = 1'-0"

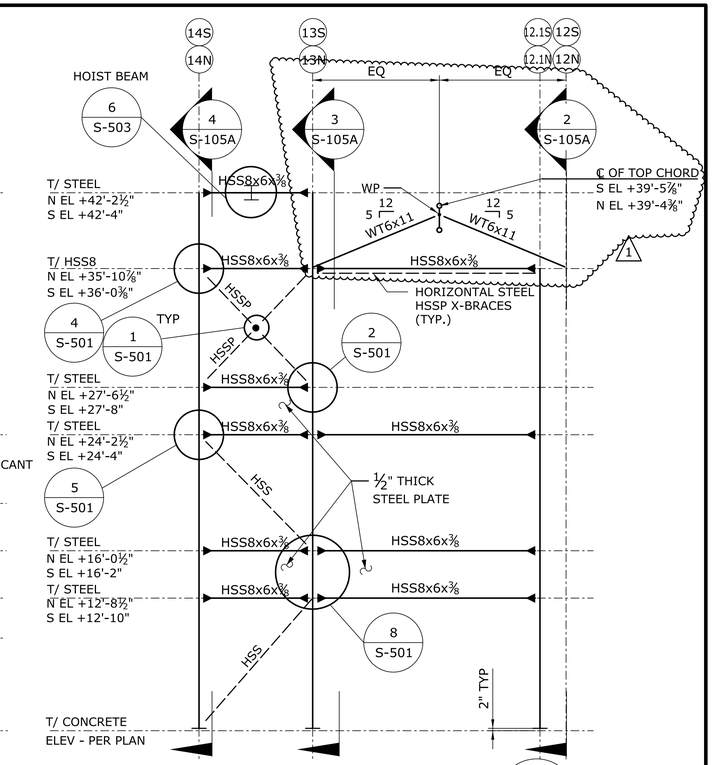

TOWER FRAME ELEVATION ALONG LINES "A.5" & "E" — 3 / S-105

SCALE: 3/16" = 1'-0"

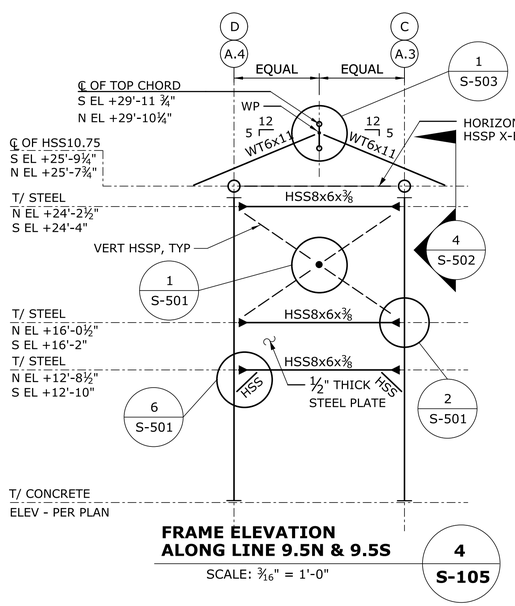

FRAME ELEVATION ALONG LINE 9.5N & 9.5S — 4 / S-105

SCALE: 3/16" = 1'-0"

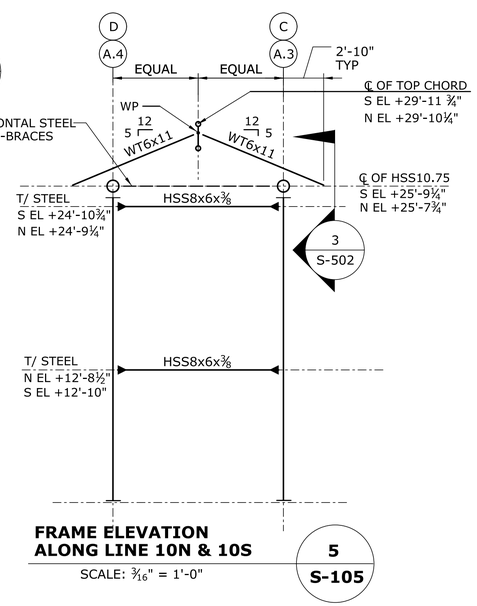

FRAME ELEVATION ALONG LINE 10N & 10S — 5 / S-105

SCALE: 3/16" = 1'-0"

LATERAL FRAME NOTES:

1. ALL ELEVATIONS ARE REFERENCED FROM DATUM ELEVATION NOTED ON S-101 AND S-102.
2. "N" INDICATES NORTH TOWER, "S" INDICATES SOUTH TOWER.
3. REFER TO TOWER FOUNDATION PLAN, DWG S-101 AND S-102 FOR TOP OF CONCRETE PIER ELEVATIONS WHICH VARY. TOP OF PIER ELEVATION CORRESPONDS TO THE TOP OF CONCRETE ELEVATION ON THIS DWG.
4. ALL CONNECTIONS, SPLICES AND ERECTION PIECES SHALL BE DESIGNED BY THE FABRICATOR'S ENGINEER REGISTERED IN THE PROJECT'S JURISDICTION. CALCULATIONS AND SHOP DRAWINGS SHALL BE SUBMITTED BEARING THE ENGINEER'S SEAL AND SIGNATURE.
5. DESIGN ALL MOMENT CONNECTIONS FOR THE WORST CASE MAXIMUM CAPACITY OF THE BEAM OR COLUMN SECTION PER AISC MANUAL OF STEEL CONSTRUCTION.
6. SUBMIT ALL CONNECTION DESIGN CALCULATIONS FOR REVIEW AND APPROVAL PRIOR TO OR ALONG WITH STEEL SHOP DRAWINGS.
7. SEE GENERAL NOTES AND SPECIFICATIONS FOR MORE INFORMATION.
8. ALL COLUMNS ARE HSS 8x8x5/8, UNO.
9. ALL HSS 8x6x⅜ BEAMS ARE LONG SIDE VERT., UNO.
10. DIAGONAL BRACING NOTED AS HSS IS HSS 4x4x3/8, UNO. AXIAL LOAD +/- 40 KIPS (LRFD).
11. DIAGONAL AND HORIZONTAL BRACING NOTED AS HSSP IS HSS 3.5x0.216. AXIAL LOAD +/- 15 KIPS (LRFD).
12. REFER TO S-106 FOR FRAMING PLANS.

ADDENDUM NO. 1

REV.	DATE	REVISION DESCRIPTION	SHEET NO.
1	8/24/2018	REVISED FRAMING	06.10.A1

THE INFORMATION, INCLUDING ESTIMATED QUANTITIES OF WORK, SHOWN ON THESE SHEETS IS BASED ON LIMITED INVESTIGATIONS BY THE STATE AND IS IN NO WAY WARRANTED TO INDICATE THE CONDITIONS OF ACTUAL QUANTITIES OF WORK WHICH WILL BE REQUIRED.

Plotted Date: 8/24/2017

DESIGNER/DRAFTER: KR-M
CHECKED BY: MDD
SCALE AS NOTED

STATE OF CONNECTICUT
DEPARTMENT OF TRANSPORTATION

Filename: FD_MSH_STR_0027_0059_S-105.dgn

SIGNATURE/BLOCK:
STATE OF CONNECTICUT — NORTH DELEGATION — LICENSED PROFESSIONAL ENGINEER — No. 19078

Michael Baker INTERNATIONAL
500 ENTERPRISE DRIVE
SUITE 2B
ROCKY HILL, CT. 06067
Phone: (860) 563-3044
MBAKERINTL.COM

PROJECT TITLE: SHORE LINE EAST RAILROAD STATIONS

TOWN: CLINTON

DRAWING TITLE: NORTH & SOUTH TOWER FRAME ELEVATIONS

PROJECT NO. 310-0059
DRAWING NO. S-105
SHEET NO. 06.10.A1

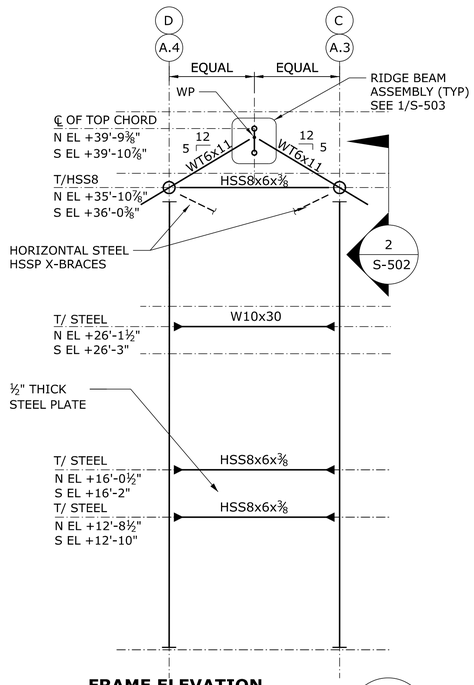

FRAME ELEVATION ALONG LINES 12N & 12S — **1 / S-105**

SCALE: 3/16" = 1'-0"

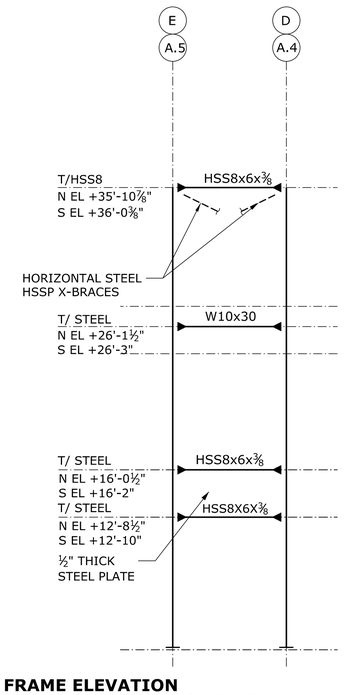

FRAME ELEVATION ALONG LINE 12.1N & 12.1S — **2 / S-105**

SCALE: 3/16" = 1'-0"

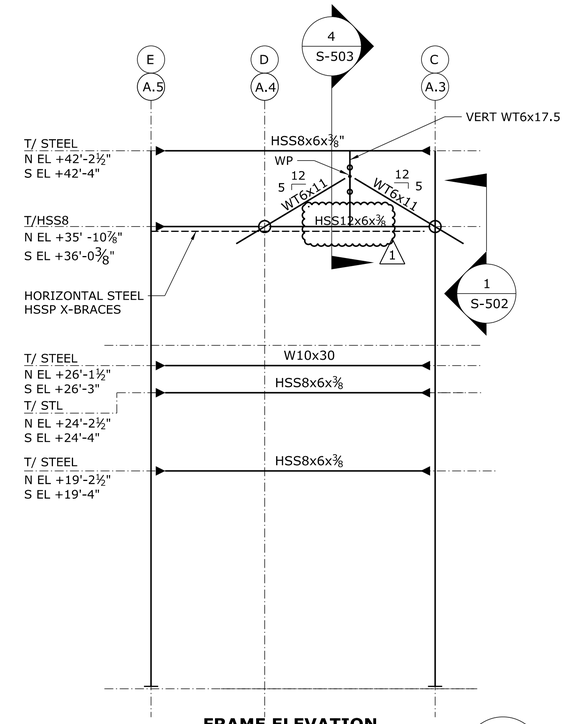

FRAME ELEVATION ALONG LINE 13N & 13S — **3 / S-105**

SCALE: 3/16" = 1'-0"

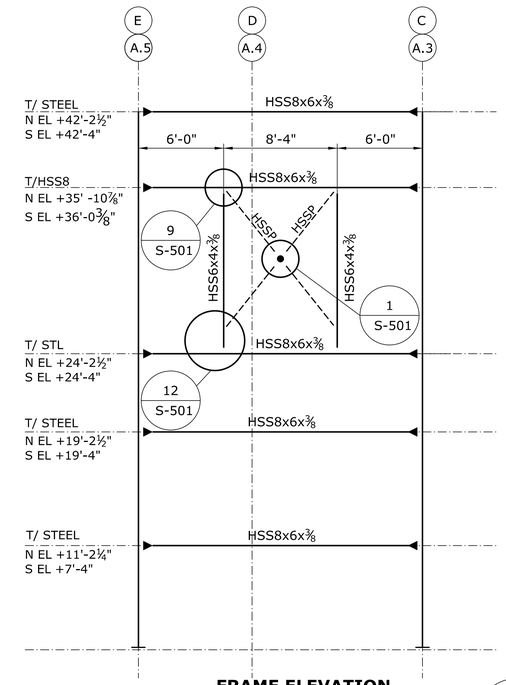

FRAME ELEVATION ALONG LINE 14N & 14S — **4 / S-105**

SCALE: 3/16" = 1'-0"

LATERAL FRAME NOTES:

1. ALL ELEVATIONS ARE REFERENCED FROM DATUM ELEVATION NOTED ON S-101 AND S-102.
2. "N" INDICATES NORTH TOWER, "S" INDICATES SOUTH TOWER.
3. REFER TO TOWER FOUNDATION PLAN, DWG S-101 AND S-102 FOR TOP OF CONCRETE PIER ELEVATIONS WHICH VARY. TOP OF PIER ELEVATION CORRESPONDS TO THE TOP OF CONCRETE ELEVATION ON THIS DWG.
4. ALL CONNECTIONS, SPLICES AND ERECTION PIECES SHALL BE DESIGNED BY THE FABRICATOR'S ENGINEER REGISTERED IN THE PROJECT'S JURISDICTION. CALCULATIONS AND SHOP DRAWINGS SHALL BE SUBMITTED BEARING THE ENGINEER'S SEAL AND SIGNATURE.
5. DESIGN ALL MOMENT CONNECTIONS FOR THE WORST CASE MAXIMUM CAPACITY OF THE BEAM OR COLUMN SECTION PER AISC MANUAL OF STEEL CONSTRUCTION.
6. SUBMIT ALL CONNECTION DESIGN CALCULATIONS FOR REVIEW AND APPROVAL PRIOR TO OR ALONG WITH STEEL SHOP DRAWINGS.
7. SEE GENERAL NOTES AND SPECIFICATIONS FOR MORE INFORMATION.
8. ALL COLUMNS ARE HSS 8x8x⅝, UNO.
9. ALL HSS 8x6x⅜ BEAMS ARE LONG SIDE VERT., UNO.
10. DIAGONAL BRACING NOTED AS HSS IS HSS 4x4x3/8, UNO. AXIAL LOAD +/- 40 KIPS (LRFD).
11. DIAGONAL AND HORIZONTAL BRACING NOTED AS HSSP IS HSS 3.5x0.216. AXIAL LOAD +/- 15 KIPS (LRFD).
12. REFER TO S-106 FOR FRAMING PLANS.

ADDENDUM NO. 1

REV.	DATE	REVISION DESCRIPTION	SHEET NO.
1	8/24/2018	REVISED FRAMING	06.11.A1

THE INFORMATION, INCLUDING ESTIMATED QUANTITIES OF WORK, SHOWN ON THESE SHEETS IS BASED ON LIMITED INVESTIGATIONS BY THE STATE AND IS IN NO WAY WARRANTED TO INDICATE THE CONDITIONS OF ACTUAL QUANTITIES OF WORK WHICH WILL BE REQUIRED.

Plotted Date: 8/24/2017

DESIGNER/DRAFTER: KR-M

CHECKED BY: MDD

SCALE AS NOTED

STATE OF CONNECTICUT
DEPARTMENT OF TRANSPORTATION

Filename: FD_MSH_STR_0027_0059_S-105.dgn

SIGNATURE/ BLOCK:

STATE OF CONNECTICUT — NORTH & DELEGATION — No. 19079 — LICENSED — PROFESSIONAL ENGINEER

Michael Baker INTERNATIONAL
500 ENTERPRISE DRIVE
SUITE 2B
ROCKY HILL, CT. 06067
Phone: (860) 563-3044
MBAKERINTL.COM

PROJECT TITLE: **SHORE LINE EAST RAILROAD STATIONS**

TOWN: **CLINTON**

DRAWING TITLE: **NORTH & SOUTH TOWER FRAME ELEVATIONS**

PROJECT NO. **310-0059**

DRAWING NO. **S-105A**

SHEET NO. **06.11.A1**

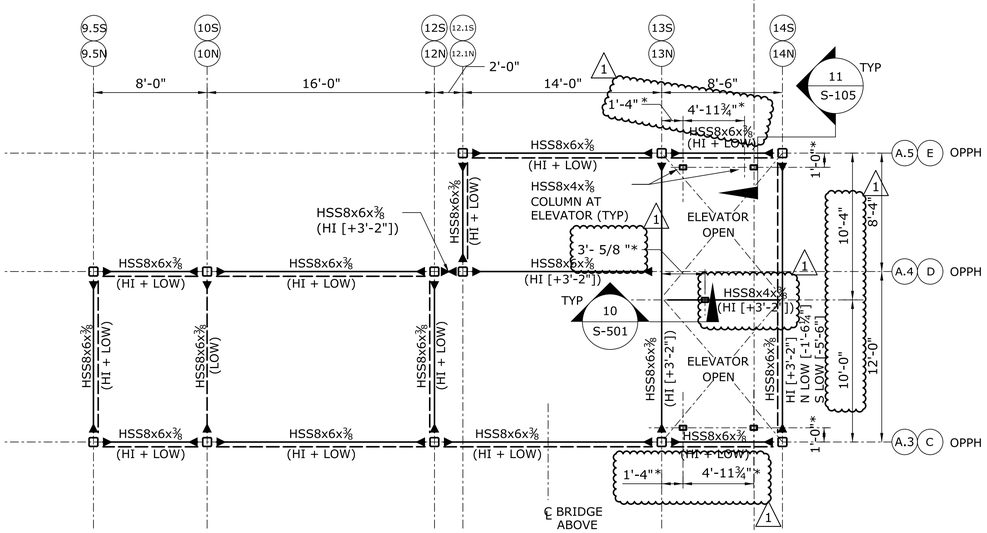

NORTH TOWER FRAMING PLAN AT T/STEEL EL +16'-0½" (HI) & +12'-8½" (LOW)
AND SOUTH TOWER FRAMING PLAN AT T/STEEL EL +16'-2" (HI) & +12'-10" (LOW)

SCALE: 3/16" = 1'-0"

1 / S-106

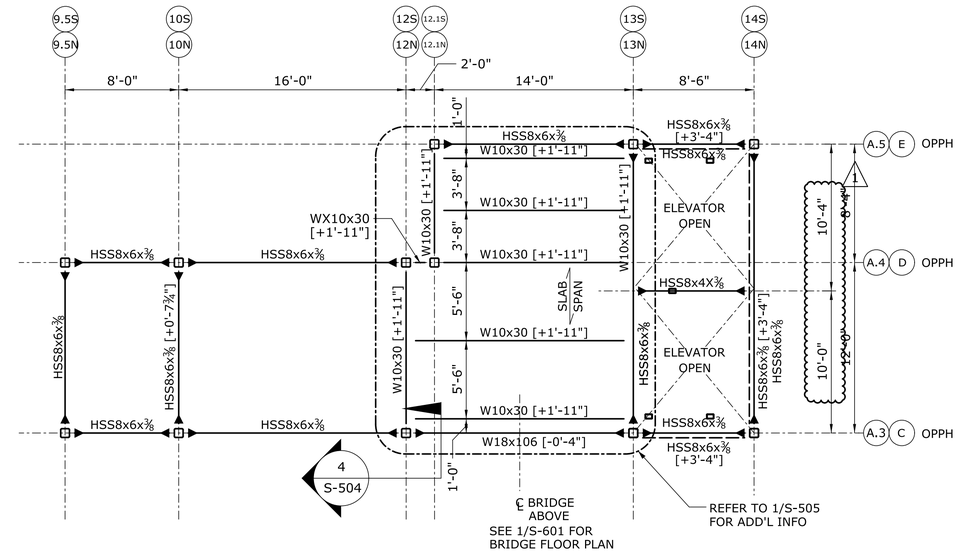

FRAMING PLAN NOTES:

1. ALL ELEVATIONS ARE REFERENCED FROM DATUM NOTED ON S-101 AND S-102.
2. ALL COLUMNS ARE HSS8x8x⅜, UNO.
3. SEE S-105 AND S-105A FOR ELEVATIONS
4. R INDICATES 1x6 T&G PLYWOOD SPAN DIRECTION SUPPORTED BY 3x8 WOOD RAFTERS @32" OC. PROVIDE WOOD RAFTERS @ 16" OC MAX @ HIP ROOF IN DETAIL 4/S-106.
5. * INDICATES DIMENSION IS TO BE COORDINATED WITH ELEVATOR MANUFACTURER

NORTH TOWER FRAMING PLAN AT T/STEEL EL +24'-2½"
AND SOUTH TOWER FRAMING PLAN AT T/STEEL EL +24'-4"

SCALE: 3/16" = 1'-0"

2 / S-106

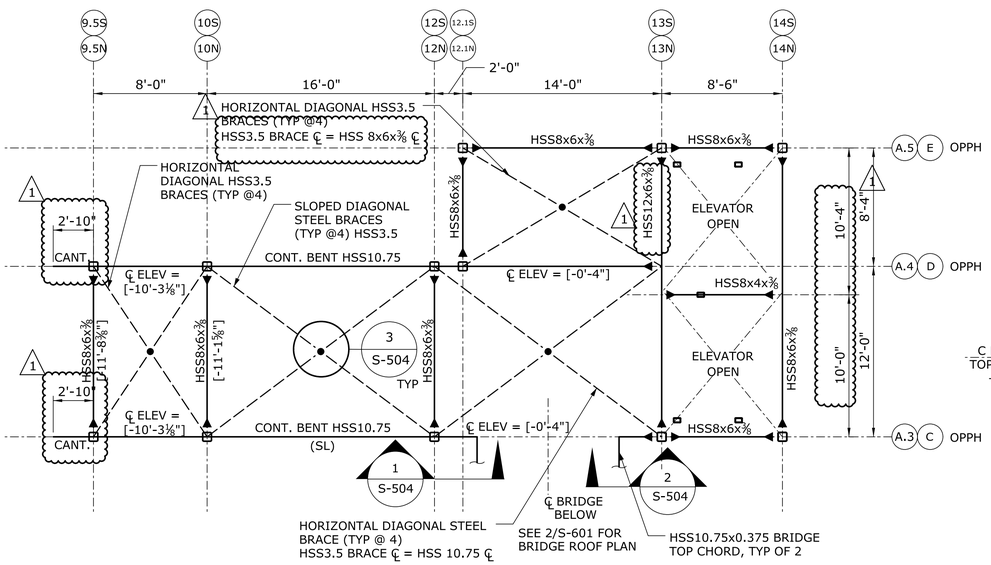

NORTH TOWER FRAMING PLAN AT T/STEEL EL +35'-10⅞"
AND SOUTH TOWER FRAMING PLAN AT T/STEEL EL +36'-0⅜"

SCALE: 3/16" = 1'-0"

3 / S-106

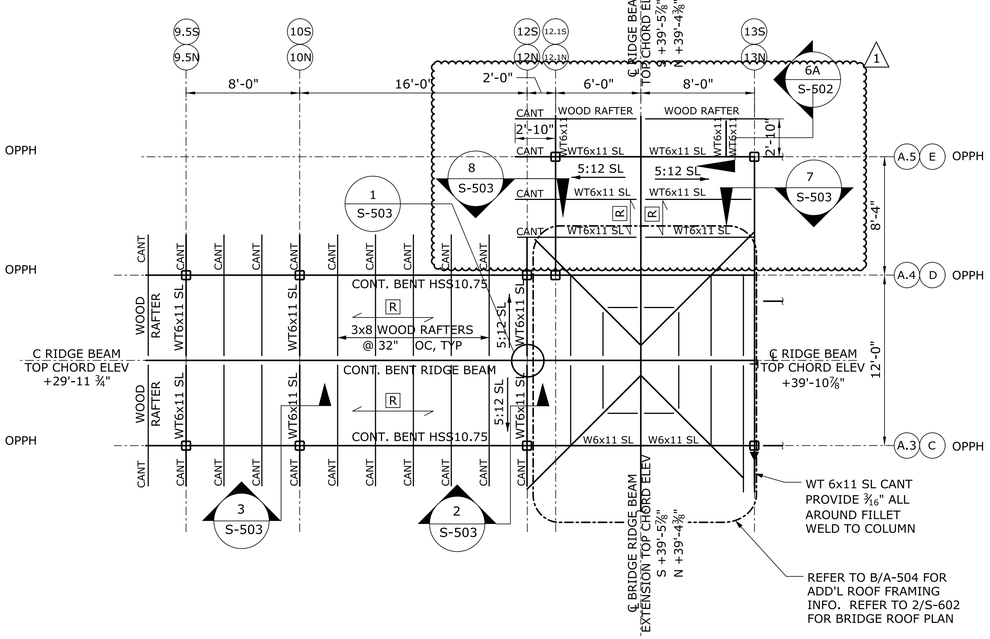

NORTH AND SOUTH TOWER ROOF FRAMING PLAN

SCALE: 3/16" = 1'-0"

4 / S-106

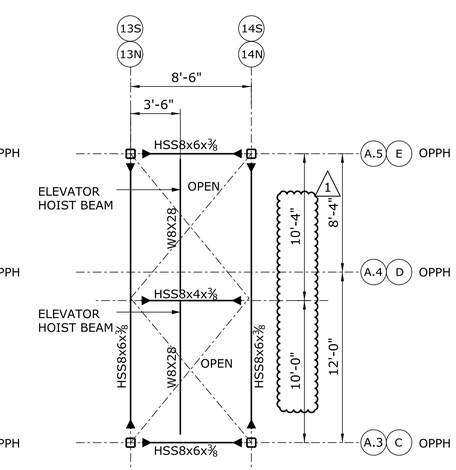

NOTES:

1. T/STEEL ELEV N = +42'-2½"
   T/STEEL ELEV S = +42'-4"
2. CONTRACTOR TO COORDINATE WITH ELEVATOR MANUFACTURER LOCATION OF ELEVATOR GUIDES AND HOIST BEAM.
3. SEE ARCHITECTURAL FOR ELEVATOR ROOF CONSTRUCTION.

NORTH & SOUTH TOWER PARTIAL FRAMING PLANS AT ELEVATOR SHAFT

SCALE: 3/16"=1'-0"

5 / S-106

ADDENDUM NO. 1

REV.	DATE	REVISION DESCRIPTION	SHEET NO.
1	8/24/2018	REVISED FRAMING	06.12.A1

THE INFORMATION, INCLUDING ESTIMATED QUANTITIES OF WORK, SHOWN ON THESE SHEETS IS BASED ON LIMITED INVESTIGATIONS BY THE STATE AND IS IN NO WAY WARRANTED TO INDICATE THE CONDITIONS OF ACTUAL QUANTITIES OF WORK WHICH WILL BE REQUIRED.

Plotted Date: 8/24/2017

DESIGNER/DRAFTER: -
CHECKED BY: -
SCALE AS NOTED

STATE OF CONNECTICUT
DEPARTMENT OF TRANSPORTATION

Filename: FD_MSH_STR_0027_0059_S-106.dgn

SIGNATURE/BLOCK:
STATE OF CONNECTICUT — NORTH DELEGATION — No. 19078 — LICENSED PROFESSIONAL ENGINEER

Michael Baker INTERNATIONAL
500 ENTERPRISE DRIVE SUITE 2B ROCKY HILL, CT. 06067
Phone: (860) 563-3044
MBAKERINTL.COM

PROJECT TITLE: SHORE LINE EAST RAILROAD STATIONS

TOWN: CLINTON

DRAWING TITLE: TOWER FRAMING PLANS

PROJECT NO. 310-0059
DRAWING NO. S-106
SHEET NO. 06.12.A1

NOTES:

1. SEE SURVEY PLAN FOR INFORMATION REGARDING ALL EXISTING UTILITY LINES (FIBER OPTIC CABLES, AMTRAK POWER AND SIGNAL LINES, ETC.) UTILITY OWNERS SHALL BE CONTACTED A MINUMUM OF 14 DAYS IN ADVANCE OF SHEET PILING INSTALLATION OR EXCAVATION AND BE GRANTED ACCESS TO THE WORK AREA FOR OVERSIGHT OF THE WORK. DRIVING OF SHEETING MAY NOT COMMENCE UNTIL THE UTILITY OWNER AND THE ENGINEER ARE SATISFIED THAT THE WORK WILL NOT ADVERSELY AFFECT THE UTILITY.
2. THE CONTRACTOR SHALL PROTECT ALL REMAINING EXISTING UTILITIES FROM DAMAGE DURING CONSTRUCTION.
3. SHEET PILING INSTALLATION SHALL BE IN ACCORDANCE WITH AMTRAK STANDARD ENGINEERING PRACTICES "REQUIREMENTS FOR TEMPORARY SHEETING AND SHORING TO SUPPORT AMTRAK TRACKS", AND WITH THE SPECIAL PROVISIONS "TEMPORARY SHEET PILING (RAILROAD)" AND "SHEET PILING MATERIAL LEFT IN PLACE (RAILROAD)".
4. HAND DIG EXPLORATORY TRENCHES IN THE AREA OF FIBER OPTIC CABLES AND OTHER UTILITIES PRIOR TO INSTALLING SHEET PILING AND UNDERDRAIN.
5. CUT OFF SHEET PILING AT SAME ELEVATION AS TOP OF TIE DURING CONSTRUCTION. AFTER CONSTRUCTION IS COMPLETED, SHEET PILING SHALL BE CUT OFF BELOW GRADE AND LEFT IN PLACE, IN ACCORDANCE WITH AMTRAK REQUIREMENTS.
6. CONTRACTOR SHALL MAINTAIN A MINIMUM DEPTH OF 3'-6" FROM FINISHED GRADE TO BOTTOM OF FOOTING.
7. SEE CIVIL GRADING PLAN FOR FINAL GRADE AT PLATFORM LOCATION.
8. THE CONTRACTOR SHALL OBTAIN OUTSIDE RAIL ELEVATION AT ALL COLUMN LINE LOCATIONS. ESTABLISHED TOP OF PLATFORM ELEVATIONS SHALL BE SUBMITTED TO THE ENGINEER FOR APPROVAL. CONSTRUCTION WILL NOT BE PERMITTED WITHOUT PRIOR APPROVAL OF THE ENGINEER.
9. REFER TO ARCHITECTURAL DRAWINGS FOR APPROXIMATE TOP OF RAIL ELEVATIONS ALONG PLATFORM.
10. THE 2" CONCRETE OVERLAY SHALL BE REINFORCED WITH 6x6 - W2.9 X W2.9 WWF WITH A CLEAR COVER OF 1½"

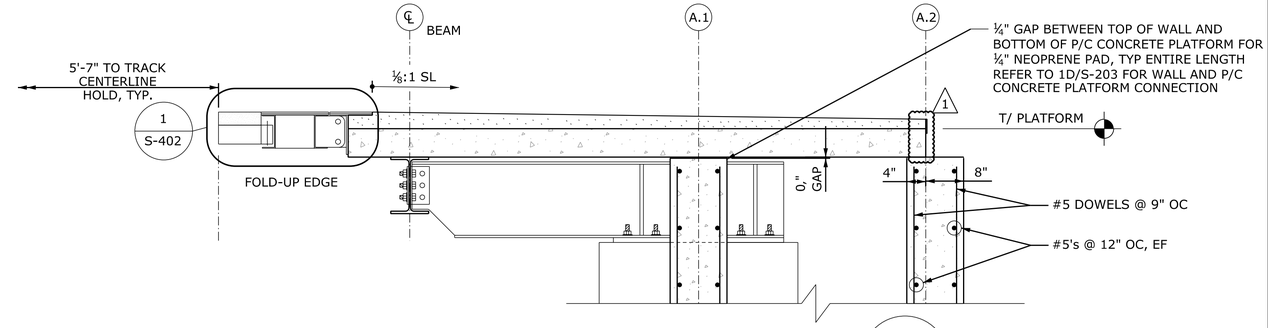

SECTION AT WALL 3 / S-103

SCALE: ¾"=1'-0"

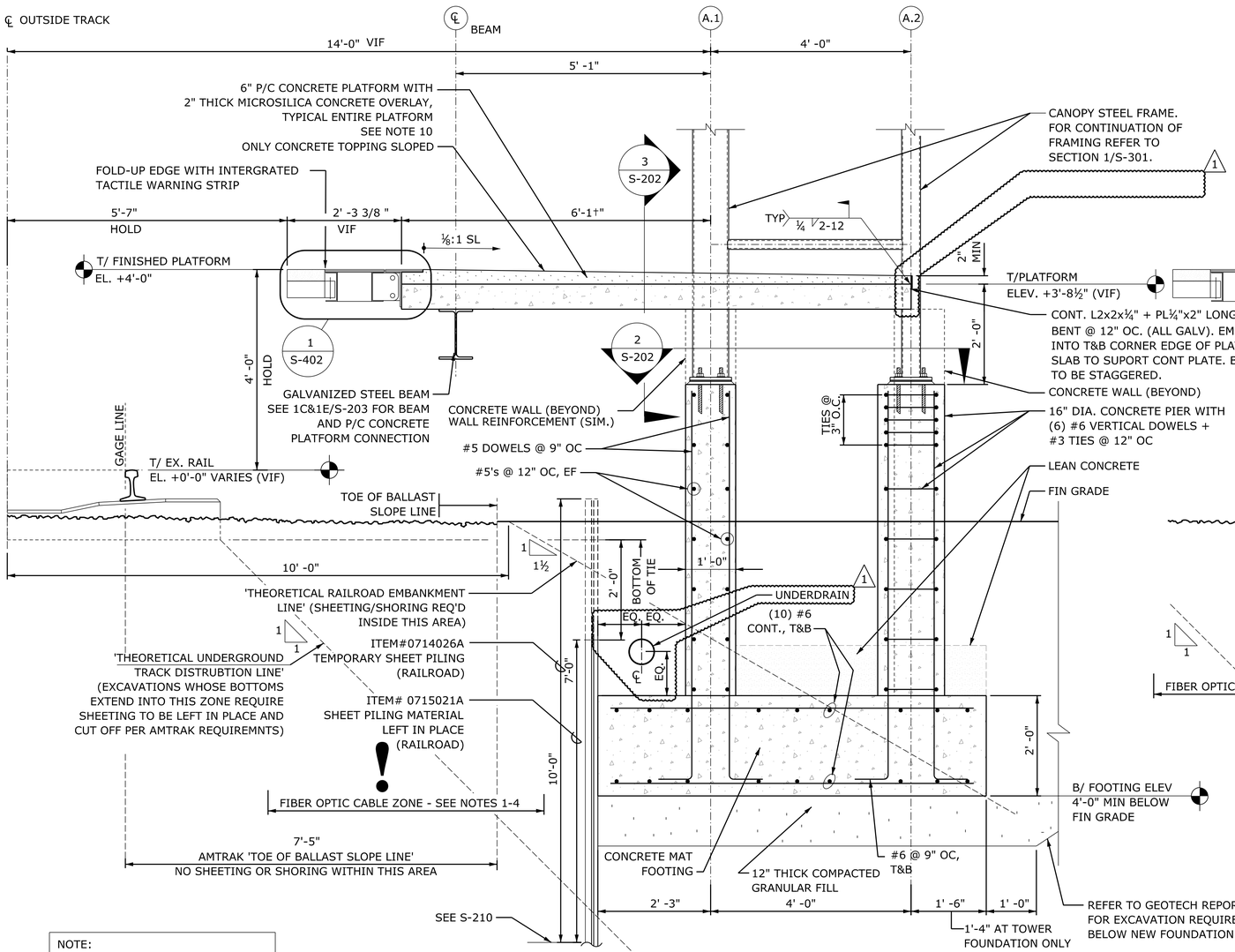

SECTION AT COLUMN 1 / S-103 | 1 / S-100

SCALE: N.T.S.

NOTE:
CONCRETE PLATFORM & TOPPING REINFORCEMENT NOT SHOWN FOR CLARITY.

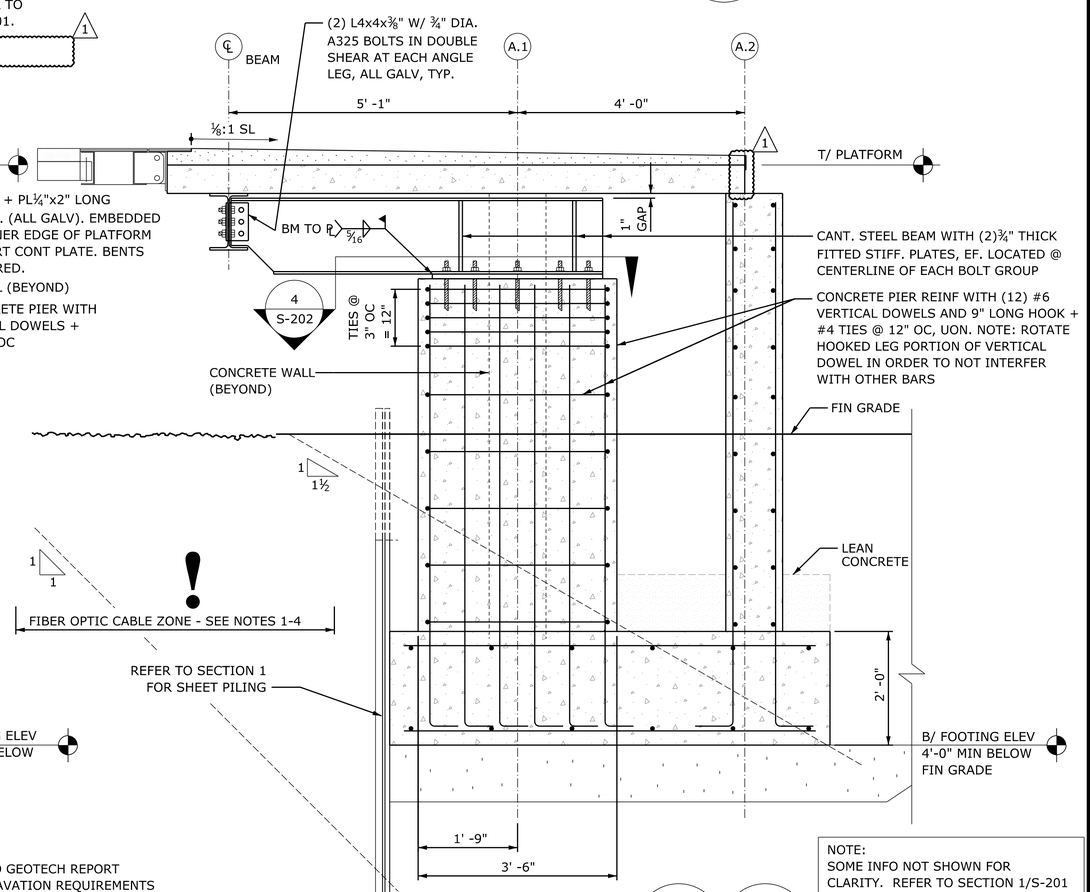

SECTION AT BEAM 2 / S-103 | 2 / S-100

SCALE: N.T.S.

NOTE:
SOME INFO NOT SHOWN FOR CLARITY. REFER TO SECTION 1/S-201 FOR FURTHER FOUNDATION INFO. REFER TO DETAIL 1/S-301 FOR FOR CANOPY STEEL FRAMING

ADDENDUM NO. 1

REV.	DATE	REVISION DESCRIPTION	SHEET NO.
1	8/24/2018	REVISED DETAIL	06.13.A1

THE INFORMATION, INCLUDING ESTIMATED QUANTITIES OF WORK, SHOWN ON THESE SHEETS IS BASED ON LIMITED INVESTIGATIONS BY THE STATE AND IS IN NO WAY WARRANTED TO INDICATE THE CONDITIONS OF ACTUAL QUANTITIES OF WORK WHICH WILL BE REQUIRED.

Plotted Date: 8/24/2017

DESIGNER/DRAFTER: KR-M
CHECKED BY: MDD
SCALE AS NOTED

STATE OF CONNECTICUT
DEPARTMENT OF TRANSPORTATION

Filename: FD_MSH_STR_0027_0059_S-201.dgn

SIGNATURE/BLOCK: STATE OF CONNECTICUT, NORTH & DELEVAN, No. 19079, LICENSED PROFESSIONAL ENGINEER

Michael Baker INTERNATIONAL
500 ENTERPRISE DRIVE
SUITE 2B
ROCKY HILL, CT. 06067
Phone: (860) 563-3044
MBAKERINTL.COM

PROJECT TITLE: SHORE LINE EAST RAILROAD STATIONS

TOWN: CLINTON

DRAWING TITLE: NEW PLATFORM SECTIONS & DETAILS

PROJECT NO. 310-0059
DRAWING NO. S-201
SHEET NO. 06.13.A1

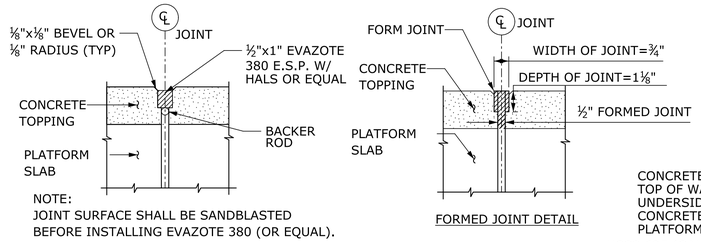

TYP CONCRETE TOPPING EXPANSION JOINT DETAILS

SCALE: NTS

1 / S-202

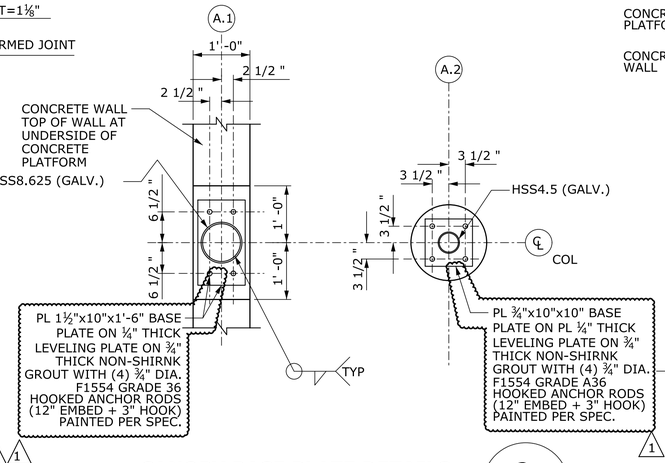

CANOPY BASE PLATE DETAILS

SCALE: NTS

2 / S-202

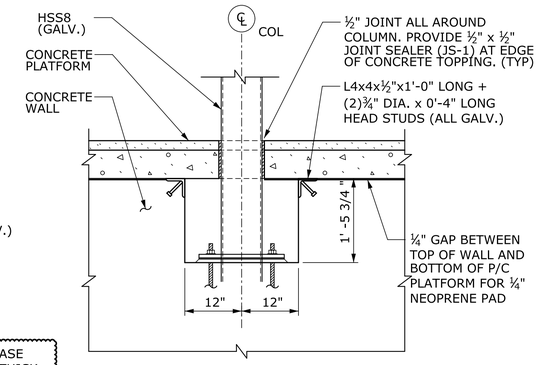

CANOPY BASE PLATE/ TOP OF WALL DETAIL

SCALE: NTS

3 / S-202

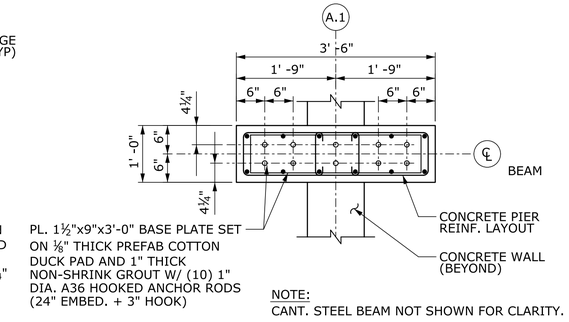

CONCRETE PIER LAYOUT PLAN DETAIL

SCALE: NTS

4 / S-202

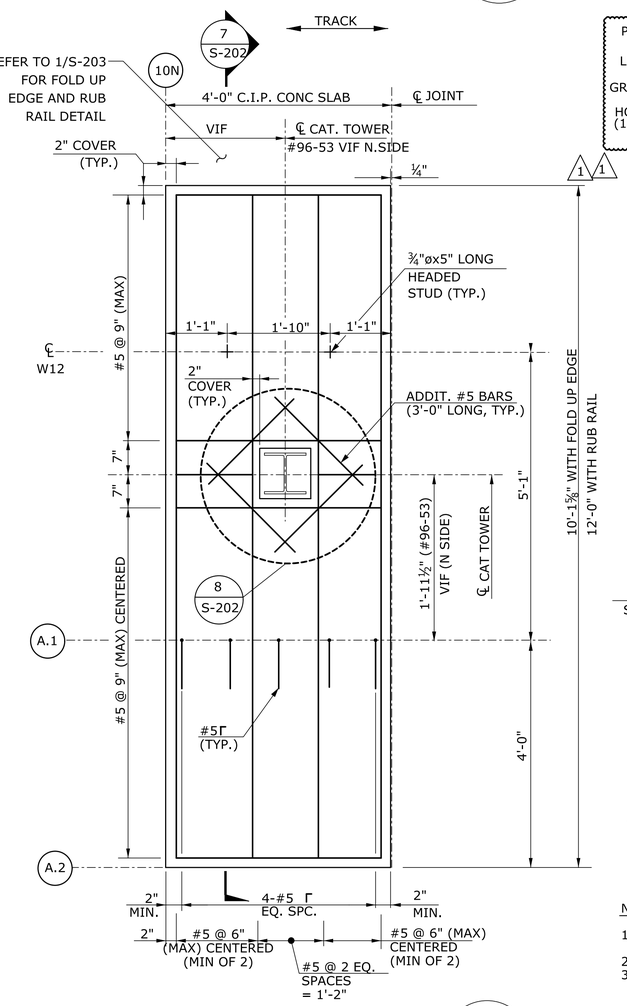

CIP CONCRETE SLAB REINF PLAN

SCALE: NTS

6 / S-104

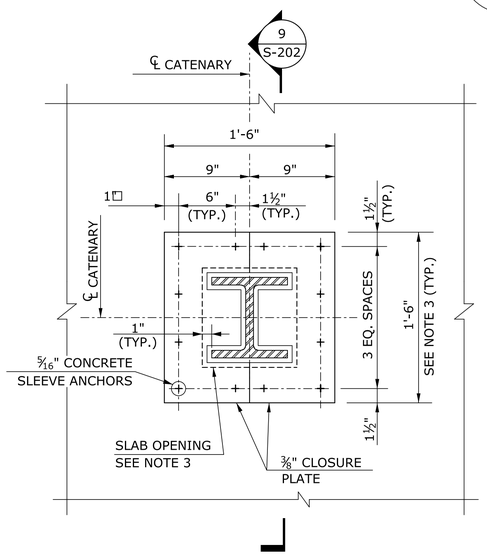

CLOSURE PLATE FOR CATENARY TOWERS

SCALE: NTS

8 / S-202

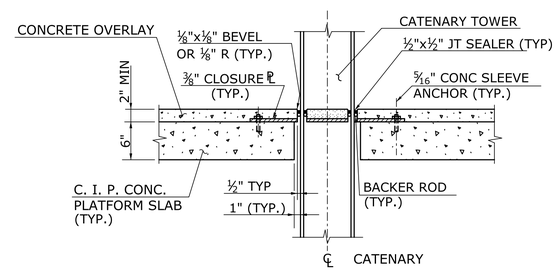

CLOSURE PLATE SECTION

SCALE: NTS

9 / S-202

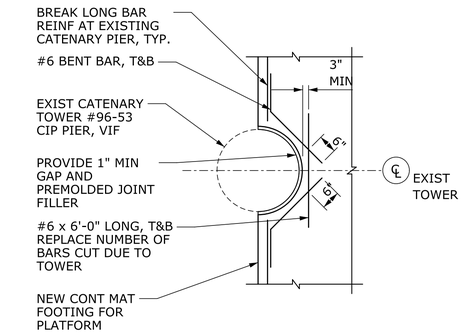

PLAN DETAIL AT EXIST CANTENARY TOWER THRU MAT FOUNDATION

SCALE: ½"=1'-0"

5 / S-202

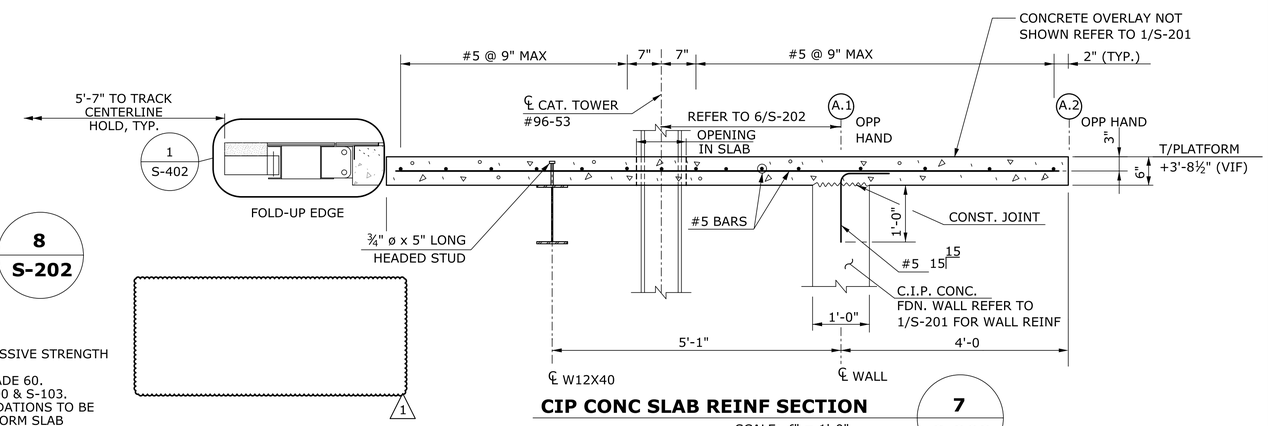

CIP CONC SLAB REINF SECTION

SCALE: 1" = 1'-0"

7 / S-202

NOTES:

1. CONCRETE FOR CAST-IN-PLACE SLAB SHALL HAVE MINIMUM COMPRESSIVE STRENGTH f'c = 4000 psi AT 28 DAYS.
2. ALL REINFORCING BARS SHALL BE EPOXY COATED, ASTM A6105, GRADE 60.
3. FOR APPROXIMATE LOCATION OF CATENARY TOWERS, SEE DWG S-100 & S-103. LOCATION AND DIMENSIONS OF EXISTING CATENARY TOWER FOUNDATIONS TO BE VERIFIED BY CONTRACTOR FIELD MEASURES. DIMENSIONS OF PLATFORM SLAB OPENINGS SHALL BE DETERMINED BY CONTRACTOR FIELD MEASUREMENTS AND APPROVED BY THE ENGINEER. CONSTRUCTION WILL NOT BE PERMITTED WITHOUT PRIOR APPROVAL OF THE ENGINEER.

ADDENDUM NO. 1

REV.	DATE	REVISION DESCRIPTION	SHEET NO.
1	8/24/2018	REVISED CALL OUT & DELETE DETAIL	06.14.A1

THE INFORMATION, INCLUDING ESTIMATED QUANTITIES OF WORK, SHOWN ON THESE SHEETS IS BASED ON LIMITED INVESTIGATIONS BY THE STATE AND IS IN NO WAY WARRANTED TO INDICATE THE CONDITIONS OF ACTUAL QUANTITIES OF WORK WHICH WILL BE REQUIRED.

Plotted Date: 8/24/2017

DESIGNER/DRAFTER: KR-M
CHECKED BY: MDD
SCALE AS NOTED

STATE OF CONNECTICUT
DEPARTMENT OF TRANSPORTATION

Filename: FD_MSH_STR_0027_0059_S-202.dgn

SIGNATURE/ BLOCK:
STATE OF CONNECTICUT NORTH DELEGATION 16,19079 LICENSED PROFESSIONAL ENGINEER

Michael Baker INTERNATIONAL
500 ENTERPRISE DRIVE SUITE 2B ROCKY HILL, CT. 06067 Phone: (860) 563-3044 MBAKERINTL.COM

PROJECT TITLE: SHORE LINE EAST RAILROAD STATIONS

TOWN: CLINTON

DRAWING TITLE: PLATFORM SECTIONS & DETAILS

PROJECT NO. 310-0059
DRAWING NO. S-202
SHEET NO. 06.14.A1

NOTES:

1. CONCRETE FOR PRESTRESSED PRECAST SLAB SHALL HAVE MINIMUM COMPRESSIVE STRENGTH REQUIREMENT AS FOLLOWS.

   AT 28 DAYS fc' = 6500 psi
   AT TRANSFER fci' = 4000 psi

2. PRESTRESSING STRANDS SHALL CONFORM TO THE REQUIREMENTS OF ASTM A416, LOW RELAXATION GRADE 270. JACKING TENSION PER STRAND SHALL BE 17.21 KIPS. TOTAL WORKING PRESTRESS FORCE PER STRAND AFTER ALL LOSSES SHALL NOT BE LESS THAN 15.75 KIPS.

3. PRESTRESSING STRANDS SHALL BE PLACED AT THE CENTER OF SLAB.

4. DRILLING HOLES IN THE PRESTRESSED SLAB, EXCEPT FOR INSTALLATION OF PLATFORM RAILING OR USE OF POWER ACTUATED TOOLS WILL NOT BE PERMITTED.

5. LOCATION AND DETAILS OF LIFTING DEVICES SHALL BE SHOWN ON THE SHOP DRAWINGS FOR APPROVAL. LIFTING HOOKS IN THE SLAB MAY BE PERMITTED IF PROPERLY BLOCKED-OUT AND FINISHED-OFF.

6. CONCRETE FOR PRESTRESSED SLABS SHALL CONTAIN CALCIUM NITRITE @ 4 GAL. PER CUBIC YARD OF A 30 PERCENT SOLID SOLUTION AND MICROSILLICA @ 7.5 PERCENT BY WEIGHT OF CEMENT. SEE SPECIFICATIONS FOR ADDITIONAL INFORMATION.

7. IN HANDLING, THE SLAB SECTIONS MUST BE MAINTAINED IN A HORIZONTAL POSITION AT ALL TIMES.

8. FOR FINISHES, SEE SPECIFICATIONS.

9. EVA FOAM TO BE INSTALLED WITH THE 11 #4 DIMENSION COMPRESSED HORIZONTALLY IN THE 3 #4 JOINT OPENING. THE 1" DIMENSION OF THE FOAM IS TO BE VERTICAL.

10. CONTRACTOR TO COORINDATE W/ARCH DWGS LOCATION OF ANY MISC ITEMS (IE. LIGHT POLES, BENCH SEATING, SIGN SUPPORTS) AND ANCHORAGE LOCATIONS ON SHOP DWGS.

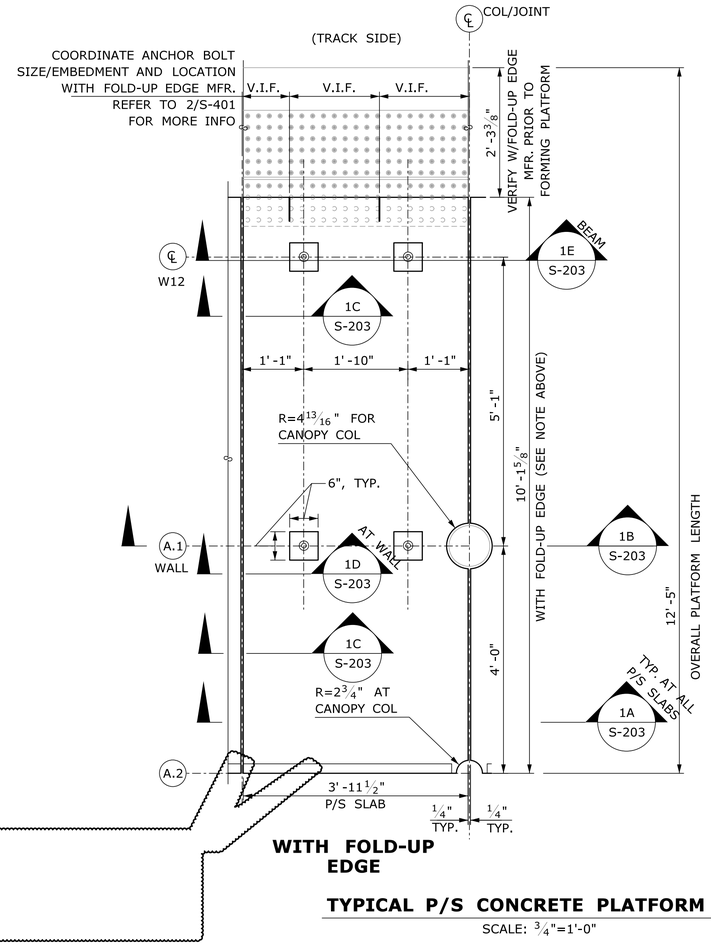

WITH FOLD-UP EDGE

TYPICAL P/S CONCRETE PLATFORM PLANKS

SCALE: 3/4"=1'-0"

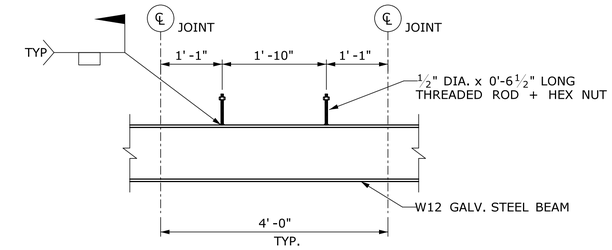

TYPICAL DETAIL STEEL BEAM CONNECTORS — 1E / S-203

SCALE: 3/4"=1'-0"

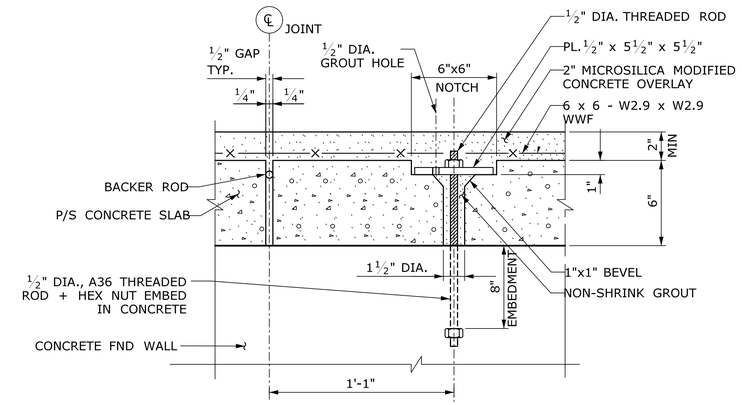

TYPICAL DETAIL - P/S SLAB TO WALL CONNECTION — 1D / S-203

SCALE: 3/4"=1'-0"

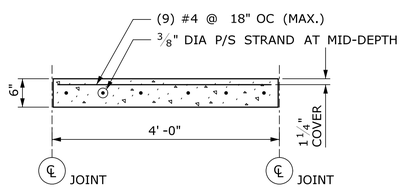

NOTE:
CONTRACTOR TO COORDINATE TRANSVERSE REBAR PLACEMENT WITH FOLD-UP EDGE AND HAND RAIL ANCHOR BOLT LOCATIONS. REBAR SHOULD BE PLACED WITHIN 2 1/2" OF THE END OF THE PRECAST PRESTRESSED PANELS.

TYPICAL SECTION - STRAND LAYOUT THRU COLUMN — 1A / S-203

SCALE: 3/4"=1'-0"

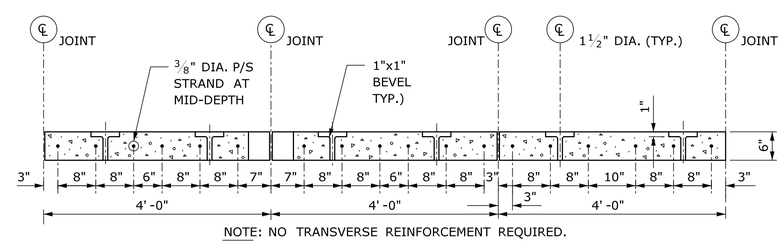

NOTE: NO TRANSVERSE REINFORCEMENT REQUIRED.

TYPICAL SECTION - STRAND LAYOUT THRU COLUMN — 1B / S-203

SCALE: 3/4"=1'-0"

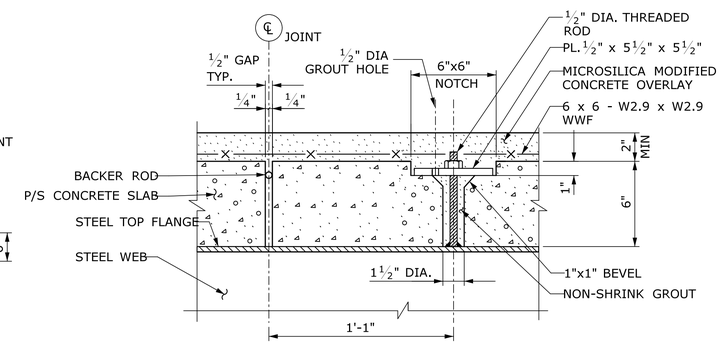

TYPICAL DETAIL - P/S SLAB TO BEAM CONNECTION — 1C / S-203

SCALE: 3/4"=1'-0"

PLAN DETAILS AND SECTIONS FOR PRESTRESSED CONCRETE PLATFORM OPTION — 1 / S-203

SCALE: 3/4"=1'-0"

ADDENDUM NO. 1

REV.	DATE	REVISION DESCRIPTION	SHEET NO.
1	8/24/2018	REMOVED CALLOUT	06.15.A1

THE INFORMATION, INCLUDING ESTIMATED QUANTITIES OF WORK, SHOWN ON THESE SHEETS IS BASED ON LIMITED INVESTIGATIONS BY THE STATE AND IS IN NO WAY WARRANTED TO INDICATE THE CONDITIONS OF ACTUAL QUANTITIES OF WORK WHICH WILL BE REQUIRED.

Plotted Date: 8/24/2017

DESIGNER/DRAFTER: KR-M
CHECKED BY: MDD
SCALE AS NOTED

STATE OF CONNECTICUT
DEPARTMENT OF TRANSPORTATION

Filename: FD_MSH_STR_0027_0059_S-203.dgn

SIGNATURE/BLOCK:
STATE OF CONNECTICUT — NO. 19078 — LICENSED PROFESSIONAL ENGINEER
Michael Baker INTERNATIONAL
500 ENTERPRISE DRIVE
SUITE 2B
ROCKY HILL, CT. 06067
Phone: (860) 563-3044
MBAKERINTL.COM

PROJECT TITLE:
SHORE LINE EAST RAILROAD STATIONS

TOWN: **CLINTON**

DRAWING TITLE: **P/C CONCRETE PLATFORM SECTIONS & DETAILS**

PROJECT NO. 310-0059
DRAWING NO. S-203
SHEET NO. 06.15.A1

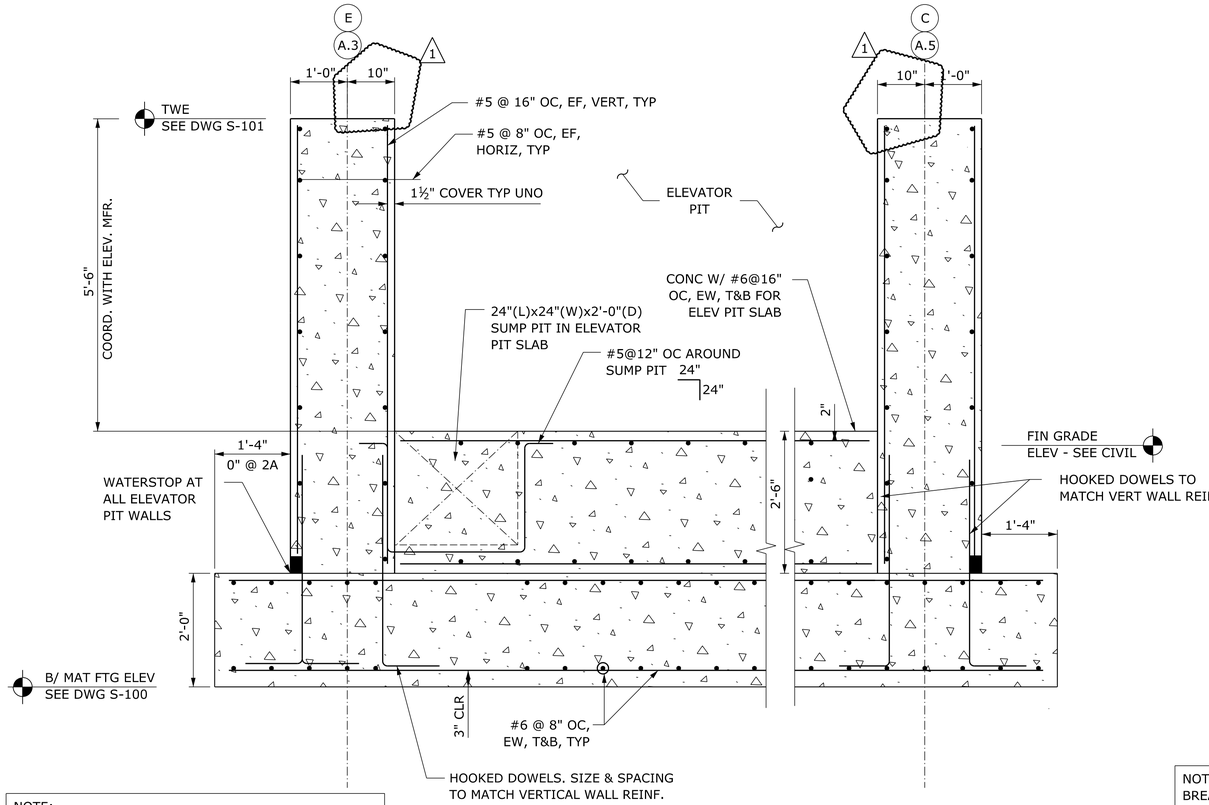

NOTE:
BREAK ELEV PIT SLAB REINFORCEMENT AT SUMP PIT

SECTION THRU ELEVATOR 2A/S-101 2/S-102

SCALE: ¾"=1'-0"

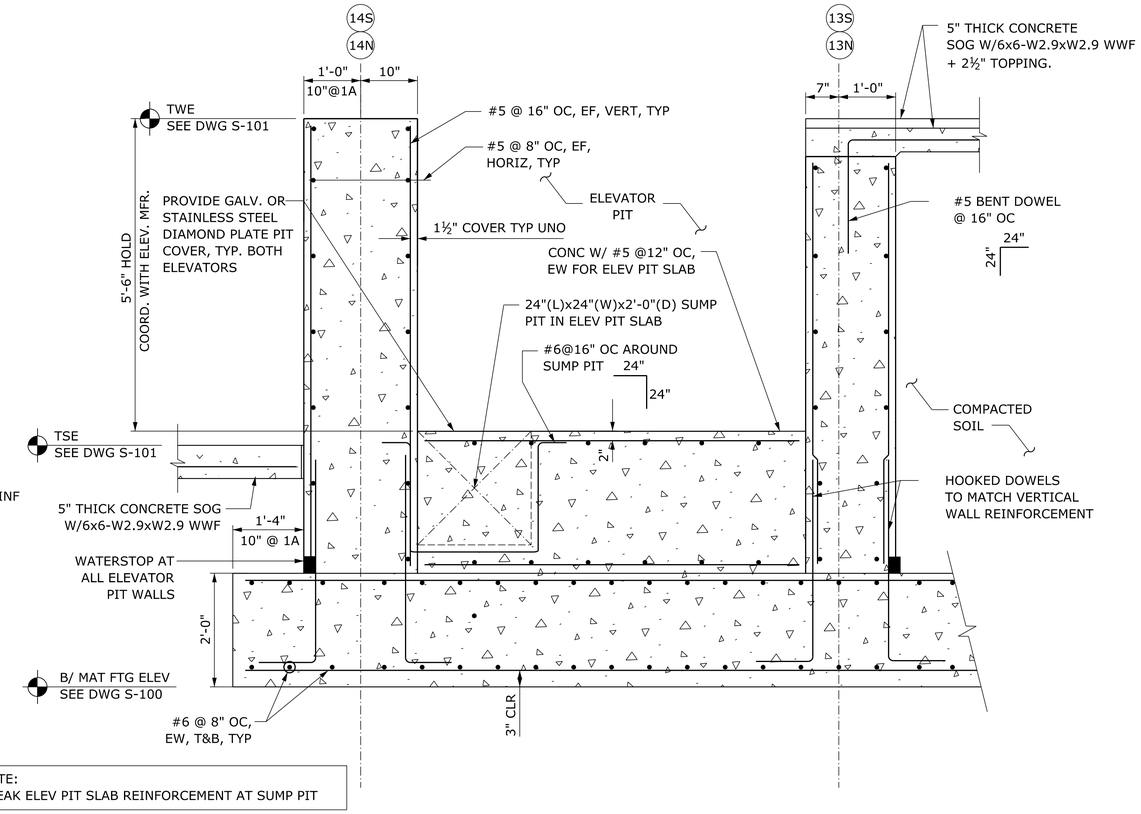

NOTE:
BREAK ELEV PIT SLAB REINFORCEMENT AT SUMP PIT

SECTION THRU ELEVATOR 1A/S-101 1/S-102

SCALE: ¾"=1'-0"

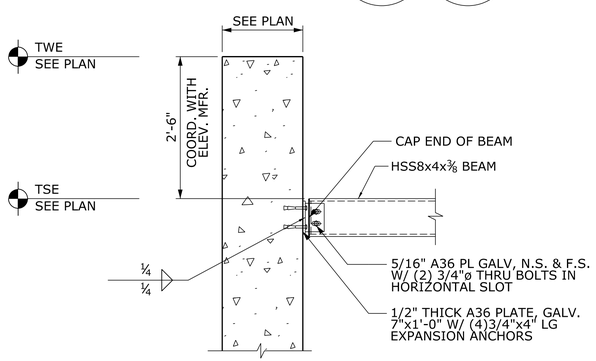

SECTION AT ELEVATOR RAIL SUPPORT BEAM 3/S-101 3/S-102

SCALE: ¾"=1'-0"

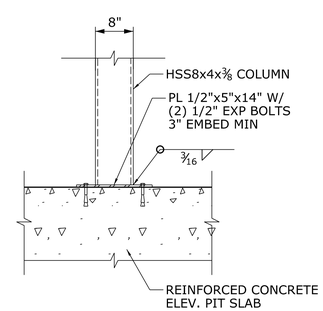

SECTION AT ELEVATOR RAIL SUPPORT BASE 4/S-101 4/S-102

SCALE: ¾"=1'-0"

ADDENDUM NO. 1

REV.	DATE	REVISION DESCRIPTION	SHEET NO.
1	8/24/2018	REVISED FOUNDATION DETAILS	06.17.A1

THE INFORMATION, INCLUDING ESTIMATED QUANTITIES OF WORK, SHOWN ON THESE SHEETS IS BASED ON LIMITED INVESTIGATIONS BY THE STATE AND IS IN NO WAY WARRANTED TO INDICATE THE CONDITIONS OF ACTUAL QUANTITIES OF WORK WHICH WILL BE REQUIRED.

Plotted Date: 8/24/2017

DESIGNER/DRAFTER: KR-M
CHECKED BY: MDD
SCALE AS NOTED

STATE OF CONNECTICUT
DEPARTMENT OF TRANSPORTATION

Filename: FD_MSH_STR_0027_0059_S-205.dgn

SIGNATURE/BLOCK:
STATE OF CONNECTICUT NORTH DELEGATION LICENSED PROFESSIONAL ENGINEER No. 19078
Michael Baker INTERNATIONAL
500 ENTERPRISE DRIVE SUITE 2B ROCKY HILL, CT. 06067 Phone: (860) 563-3044 MBAKERINTL.COM

PROJECT TITLE:
SHORE LINE EAST RAILROAD STATIONS

TOWN: **CLINTON**

DRAWING TITLE:
NORTH TOWER FOUNDATION SECTIONS

PROJECT NO. 310-0059
DRAWING NO. S-205
SHEET NO. 06.17.A1

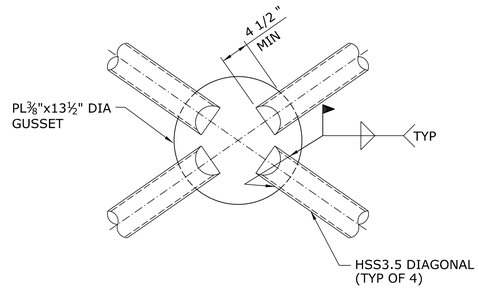

TYP VERT. DIAGONAL DTL. AT CENTER SUPPORT 1 S-105 | 1 S-105A

SCALE: 1½"=1'-0"

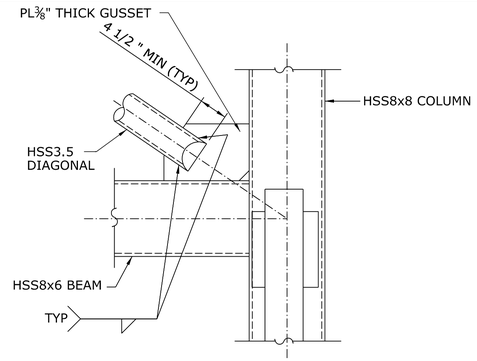

SECTION - DIAGONAL TO COLUMN/BEAM INTERSECTION 2 S-105

SCALE: 1½"=1'-0"

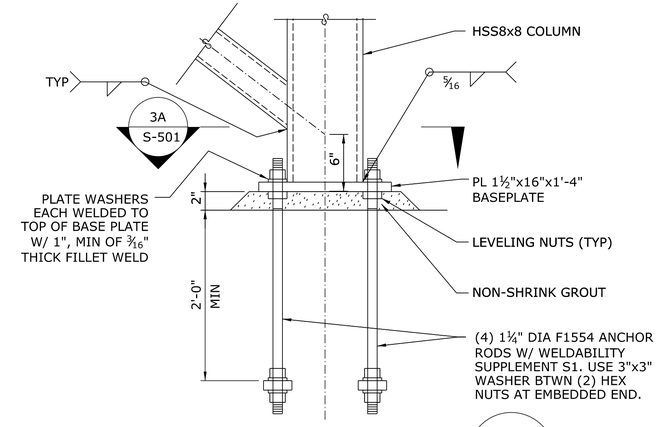

BASE PLATE SECTION 3 S-501

SCALE: NTS

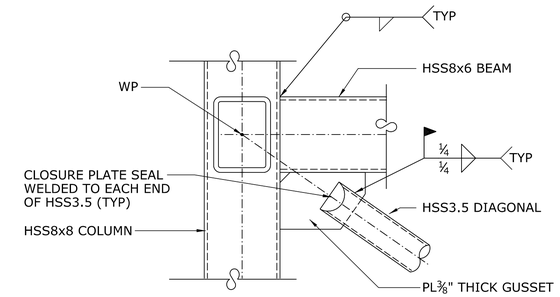

TYP STAIR END ELEVATION 4 S-105

SCALE: 1½"=1'-0"

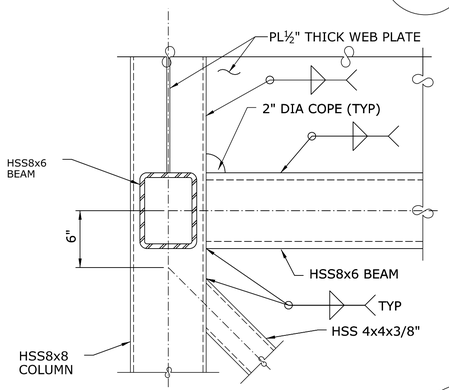

TYP ELEVATOR TOWER CONNECTION 5 S-105

SCALE: 1½"=1'-0"

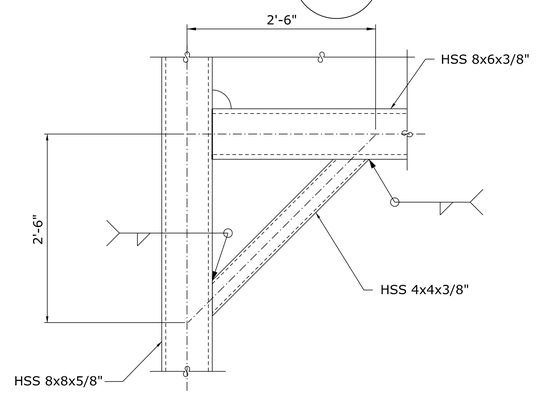

TYPICAL CONNECTION DETAIL 6 S-105

SCALE: 1"=1'-0"

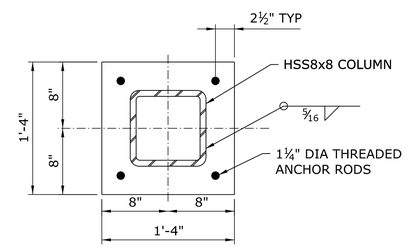

NOTE:

ALL ANCHOR RODS, NUTS, WASHERS AND BASEPLATE TO BE GALV.

BASE PLATE DETAIL 3A S-501

SCALE: NTS

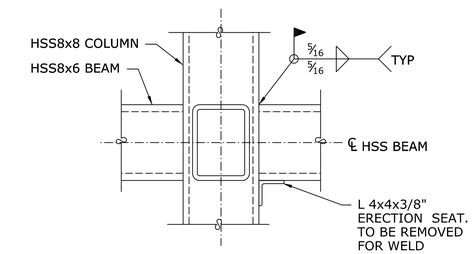

TYP FIELD CONNECTION DETAIL 7 S-105

SCALE: 1½"=1'-0"

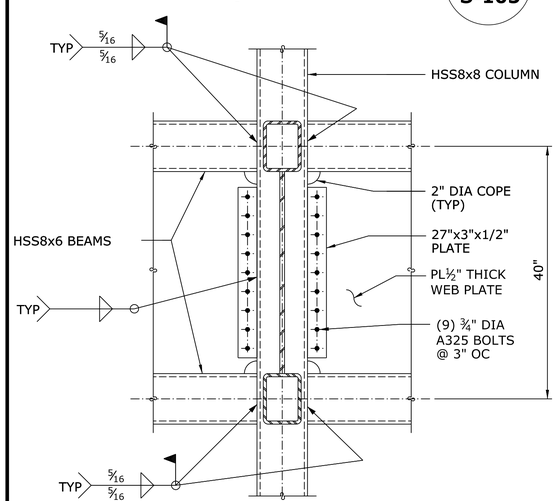

TYP FIELD CONNECTION DETAIL 8 S-105

SCALE: 1"=1'-0"

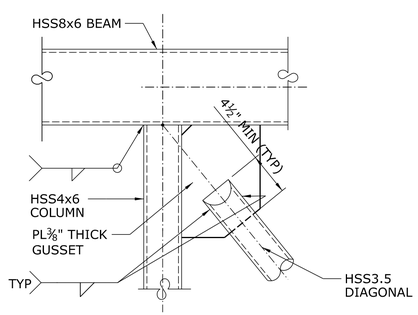

DIAGONAL TO COLUMN/BEAM INTERSECTION 9 S-105A

SCALE: 1½"=1'-0"

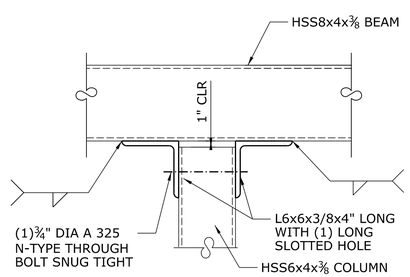

ELEVATOR COLUMN CONNECTION 10 S-106

SCALE: 1½"=1'-0"

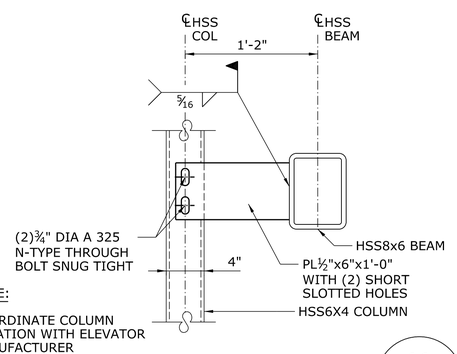

NOTE:

COORDINATE COLUMN LOCATION WITH ELEVATOR MANUFACTURER

ELEVATOR COLUMN CONNECTION 11 S-106

SCALE: 1½"=1'-0"

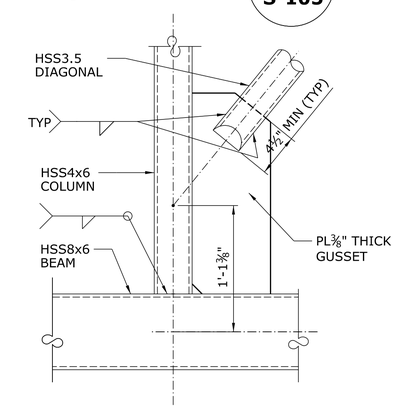

DIAGONAL TO COLUMN/BEAM INTERSECTION 12 S-105A

SCALE: 1½"=1'-0"

NOTES:

1. REFER TO GENERAL NOTES, KEYS, AND ABBREVIATIONS AND SPECIFICATIONS FOR MORE INFORMATION.
2. ALL HSS3.5 OR HSS4.5 TO HAVE ⅛" CLOSURE PLATE SEAL WELDED TO PIPE END.
3. ALL WELDS SHALL BE ¼" THICK FILLET WELDS, UNO.
4. NOT USED
5. ALL STEEL CONNECTION FASTENERS TO BE GALVANIZED. REFER TO SPECIFICATIONS FOR MORE INFORMATION.

ADDENDUM NO. 1

REV.	DATE	REVISION DESCRIPTION	SHEET NO.
1	8/24/2018	DELETE NOTE 4	06.29.A1

THE INFORMATION, INCLUDING ESTIMATED QUANTITIES OF WORK, SHOWN ON THESE SHEETS IS BASED ON LIMITED INVESTIGATIONS BY THE STATE AND IS IN NO WAY WARRANTED TO INDICATE THE CONDITIONS OF ACTUAL QUANTITIES OF WORK WHICH WILL BE REQUIRED.

Plotted Date: 8/24/2017

DESIGNER/DRAFTER: MDD/KR-M

CHECKED BY: MDD

SCALE AS NOTED

STATE OF CONNECTICUT
DEPARTMENT OF TRANSPORTATION

Filename: FD_MSH_STR_0027_0059_S-501.dgn

SIGNATURE/BLOCK:

Michael Baker INTERNATIONAL
500 ENTERPRISE DRIVE
SUITE 2B
ROCKY HILL, CT. 06067
Phone: (860) 563-3044
MBAKERINTL.COM

PROJECT TITLE: SHORE LINE EAST RAILROAD STATIONS

TOWN: CLINTON

DRAWING TITLE: TOWER SUPERSTRUCTURE SECTIONS & DETAILS - 1

PROJECT NO. 310-0059

DRAWING NO. S-501

SHEET NO. 06.29.A1

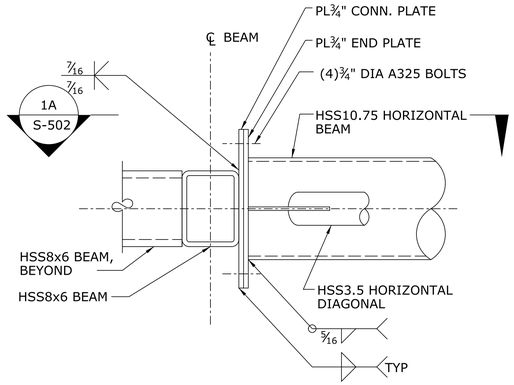

TYP CONNECTION DETAIL 1 / S-105 | 1 / S-105A
SCALE: 1½" =1'-0"

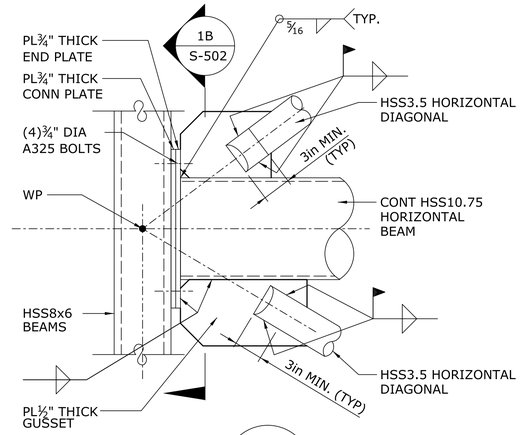

PLAN DETAIL 1A / S-502
SCALE 1½" =1'-0"

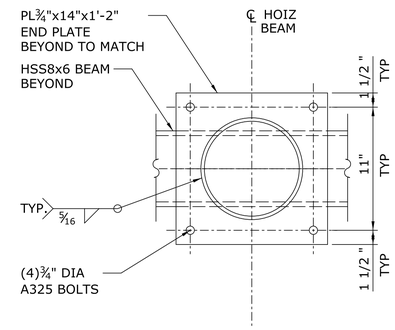

DETAIL 1B / S-502
SCALE 1½" =1'-0"

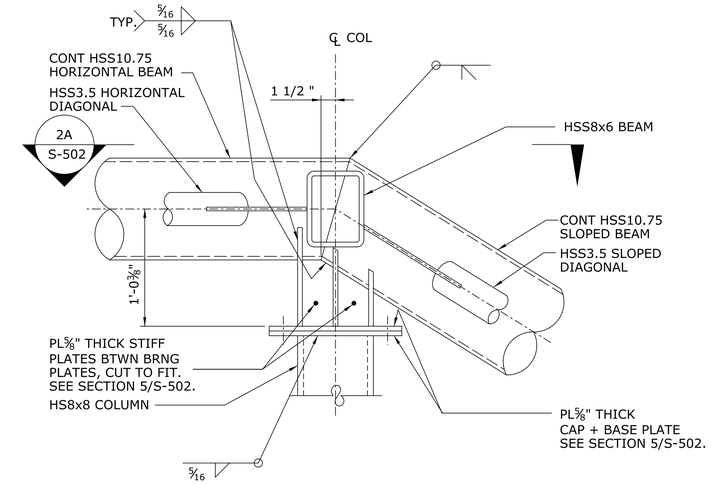

TYP CONNECTION DETAIL 2 / S-105 | 2 / S-105A
SCALE 1½" =1'-0"

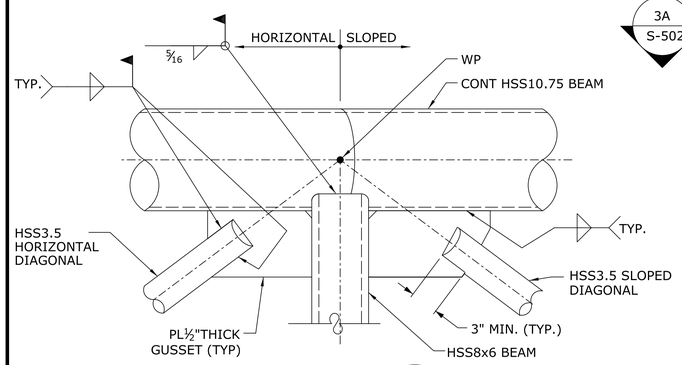

PLAN DETAIL 2A / S-502
SCALE 1½" =1'-0"

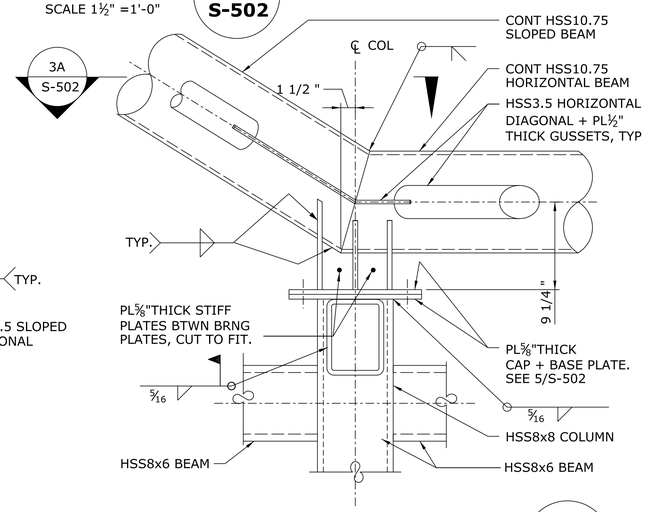

TYP CONNECTION DETAIL 3 / S-105
SCALE 1½" =1'-0"

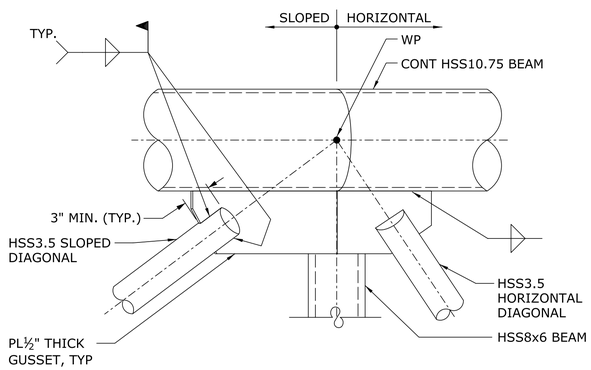

PLAN DETAIL 3A / S-502
SCALE 1½" =1'-0"

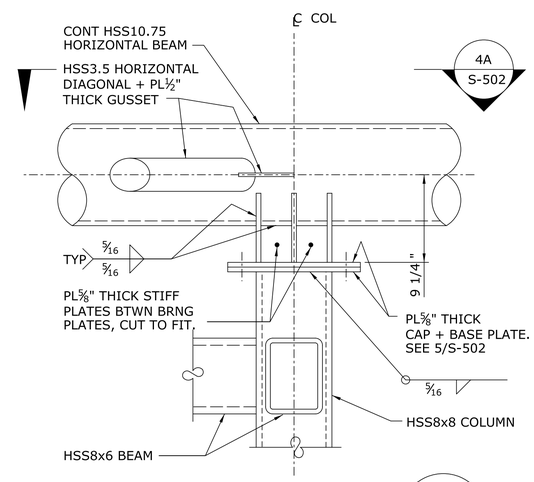

TYP CONNECTION DETAIL 4 / S-105
SCALE 1½" =1'-0"

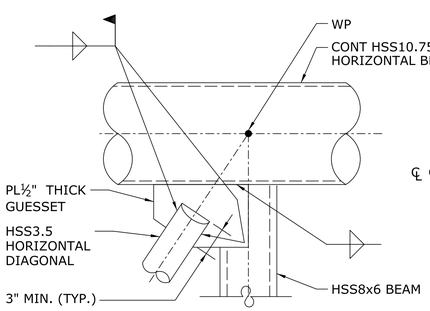

PLAN DETAIL 4A / S-502
SCALE 1½" =1'-0"

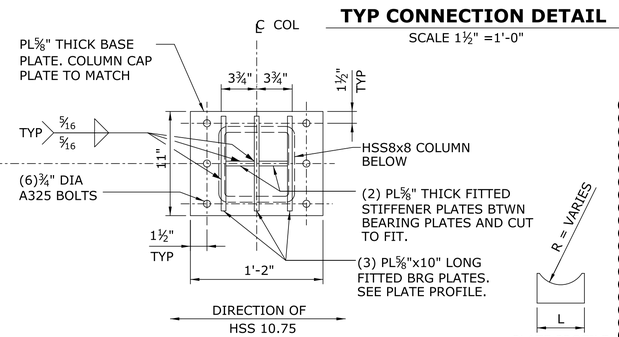

TOP VIEW OF BEARING 5 / S-502
SCALE 1½" =1'-0"

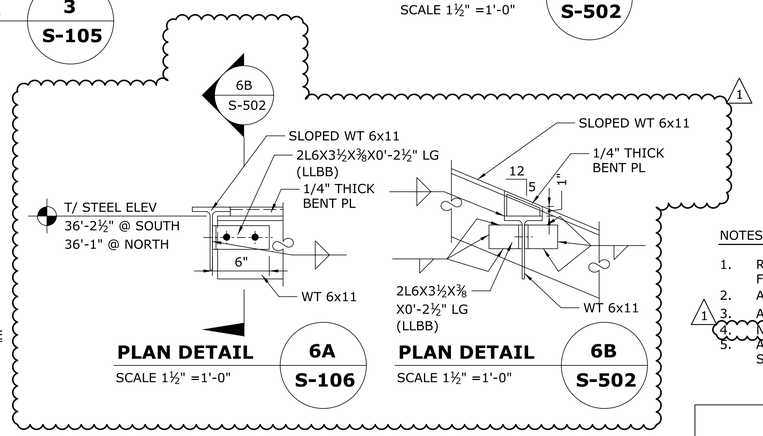

PLAN DETAIL 6A / S-106
SCALE 1½" =1'-0"

PLAN DETAIL 6B / S-502
SCALE 1½" =1'-0"

NOTES:

1. REFER TO GENERAL NOTES, KEYS, AND ABBREVIATIONS AND SPECIFICATIONS FOR MORE INFO.
2. ALL HSS 3.5 OR HSS 4.5 TO HAVE ⅛" CLOSURE PLATE SEAL WELDED TO PIPE END.
3. ALL WELDS SHALL BE ¼" THICK FILLET WELDS, UON.
4. NOT USED
5. ALL STEEL CONNECTION FASTENERS TO BE GALVANIZED. REFER TO SPECIFICATIONS FOR MORE INFOMRATION.

ADDENDUM NO. 1

REV.	DATE	REVISION DESCRIPTION	SHEET NO.
1	8/24/2018	DELETE DETAIL 6 & NOTE 4, ADD DETAIL 6 A & B	06.30.A1

THE INFORMATION, INCLUDING ESTIMATED QUANTITIES OF WORK, SHOWN ON THESE SHEETS IS BASED ON LIMITED INVESTIGATIONS BY THE STATE AND IS IN NO WAY WARRANTED TO INDICATE THE CONDITIONS OF ACTUAL QUANTITIES OF WORK WHICH WILL BE REQUIRED.

Plotted Date: 8/24/2017

DESIGNER/DRAFTER: KR-M
CHECKED BY: MDD
SCALE AS NOTED

STATE OF CONNECTICUT
DEPARTMENT OF TRANSPORTATION

Filename: FD_MSH_STR_0027_0059_S-502.dgn

SIGNATURE/BLOCK:
STATE OF CONNECTICUT · NORTH DELEGATE · No. 19070 · LICENSED · PROFESSIONAL ENGINEER
Michael Baker INTERNATIONAL
500 ENTERPRISE DRIVE SUITE 2B ROCKY HILL, CT. 06067
Phone: (860) 563-3044
MBAKERINTL.COM

PROJECT TITLE:
SHORE LINE EAST RAILROAD STATIONS

TOWN: **CLINTON**

DRAWING TITLE: **TOWER SUPERSTRUCTURE SECTIONS & DETAILS - 2**

PROJECT NO. 310-0059
DRAWING NO. S-502
SHEET NO. 06.30.A1

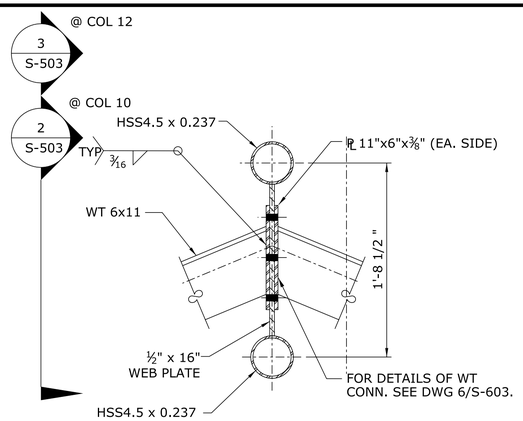

WT/RIDGE BEAM CONN. DETAIL 1 / S-105 | 1 / S-106

SCALE: 1½" =1'-0"

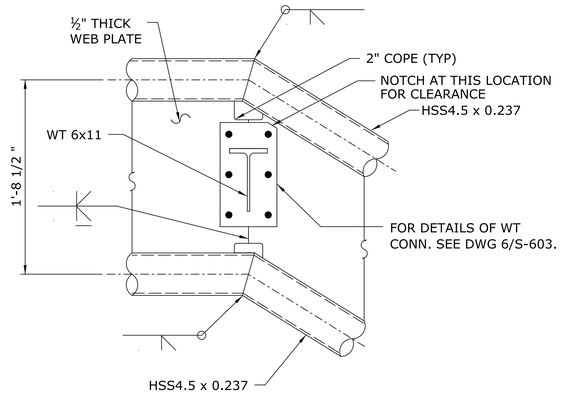

TYPICAL CONNECTION DETAIL 2 / S-106

SCALE: 1½" =1'-0"

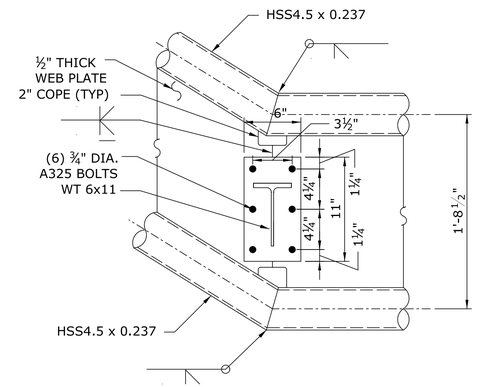

TYPICAL CONNECTION DETAIL 3 / S-106

SCALE: 1½" =1'-0"

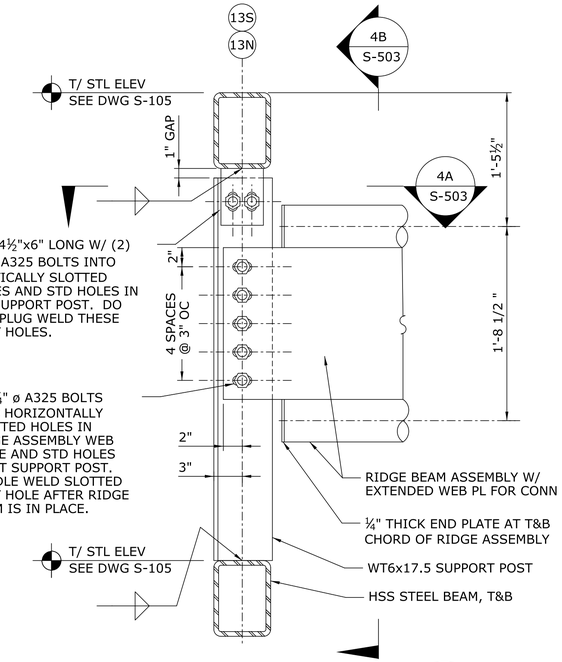

SECTION AT TOWER RIDGE ASSEMBLY SUPPORT 4 / S-106

SCALE: 1½" =1'-0"

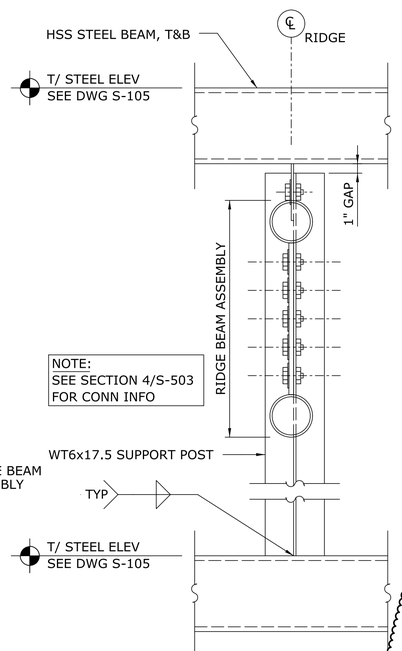

SECTION AT TOWER RIDGE ASSEMBLY SUPPORT 4B / S-503

SCALE: 1½" =1'-0"

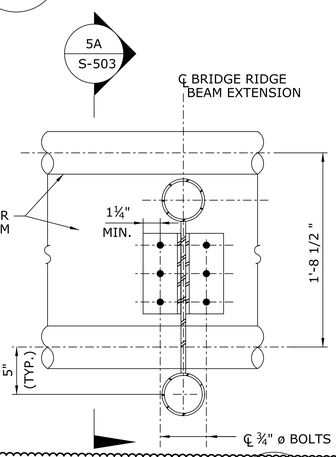

DETAIL 5 / S-105

SCALE: 1½"=1'-0"

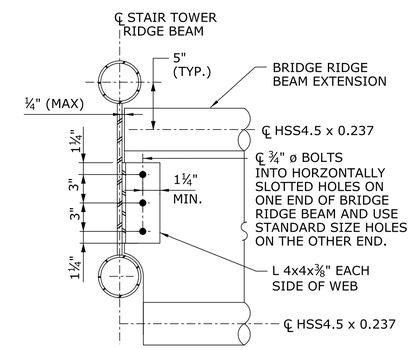

DETAIL 5A / S-503

SCALE: 1½"=1'-0"

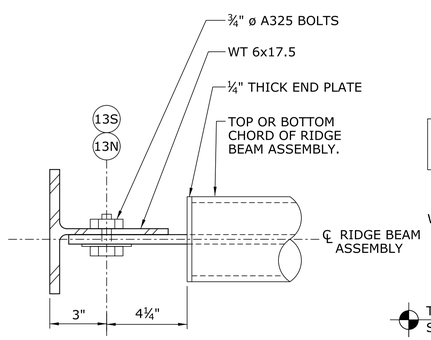

PLAN DETAIL 4A / S-503

SCALE: 1½" =1'-0"

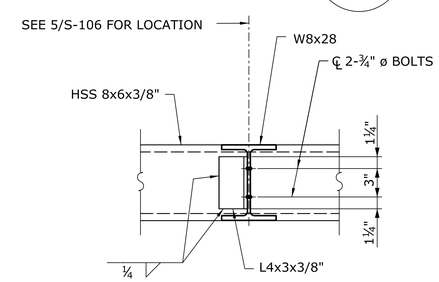

HOIST BEAM CONNECTION DETAIL 6 / S-105

SCALE: 1½" =1'-0"

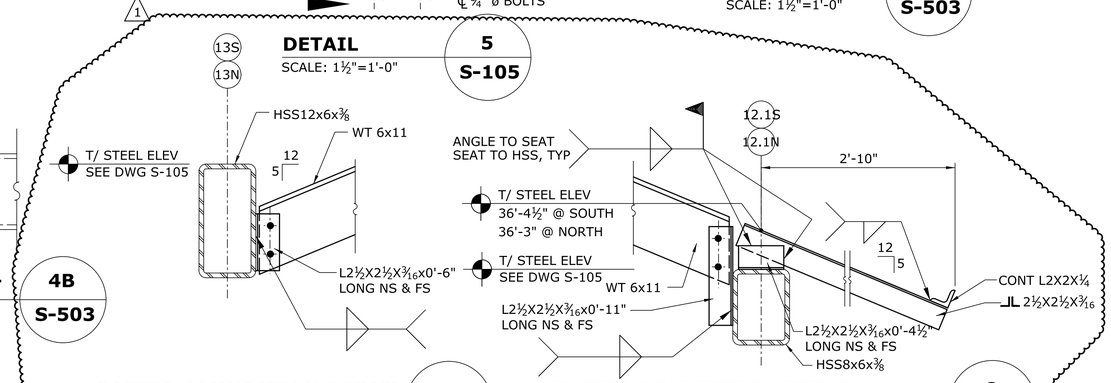

RAFTER CONNECTION DETAIL 7 / S-106

SCALE: 1½" =1'-0"

RAFTER CONNECTION DETAIL 8 / S-106

SCALE: 1½" =1'-0"

NOTES:

1. REFER TO GENERAL NOTES ,KEYS, ABBREVIATIONS, AND SPECIFICATIONS FOR MORE INFO.
2. ALL HSS3.5 OR HSS4.5 TO HAVE 1/8" CLOSURE PLATE SEAL WELDED TO PIPE END.
3. ALL WELDS SHALL BE 1/4" THICK FILLET WELDS UNLESS NOTED OTHERWISE.

1

ADDENDUM NO. 1

REV.	DATE	REVISION DESCRIPTION	SHEET NO.
1	8/24/2018	REVISED FRAMING DETAILS	06.31.A1

THE INFORMATION, INCLUDING ESTIMATED QUANTITIES OF WORK, SHOWN ON THESE SHEETS IS BASED ON LIMITED INVESTIGATIONS BY THE STATE AND IS IN NO WAY WARRANTED TO INDICATE THE CONDITIONS OF ACTUAL QUANTITIES OF WORK WHICH WILL BE REQUIRED.

Plotted Date: 8/24/2017

DESIGNER/DRAFTER: MDD/KR-M
CHECKED BY: MDD
SCALE AS NOTED

STATE OF CONNECTICUT
DEPARTMENT OF TRANSPORTATION

Filename: FD_MSH_STR_0027_0059_S-503.dgn

SIGNATURE/BLOCK:

Michael Baker INTERNATIONAL
500 ENTERPRISE DRIVE
SUITE 2B
ROCKY HILL, CT. 06067
Phone: (860) 563-3044
MBAKERINTL.COM

PROJECT TITLE: SHORE LINE EAST RAILROAD STATIONS

TOWN: CLINTON

DRAWING TITLE: TOWER SUPERSTRUCTURE SECTIONS & DETAILS - 3

PROJECT NO. 310-0059
DRAWING NO. S-503
SHEET NO. 06.31.A1

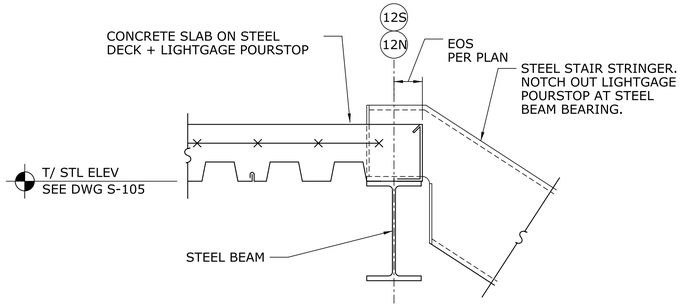

SECTION AT LANDING EDGE OF SLAB — 7 / S-505

SCALE: 1½"=1'-0"

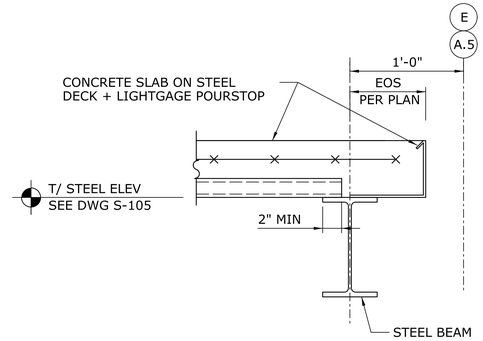

SECTION DETAIL DECK SUPPORT — 4 / S-505

SCALE: 1½"=1'-0"

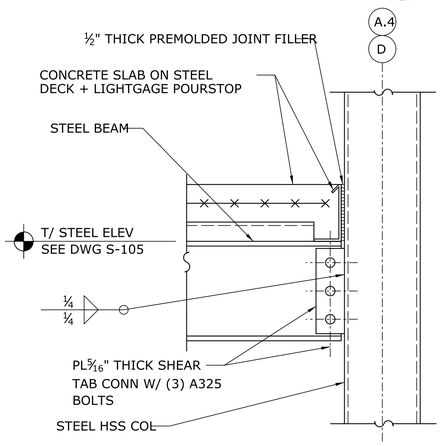

SECTION - COLUMN / BEAM CONNECTION AT LANDING — 6 / S-505

SCALE: 1½"=1'-0"

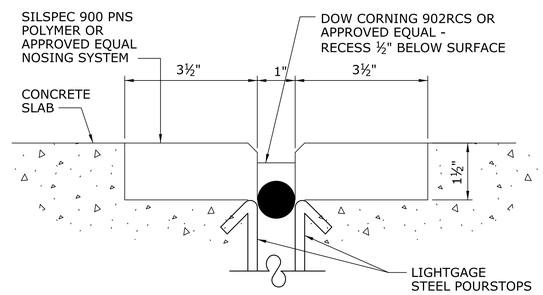

SECTION DETAIL - SLAB JOINT — 3A / S-505

SCALE: 1½"=1'-0"

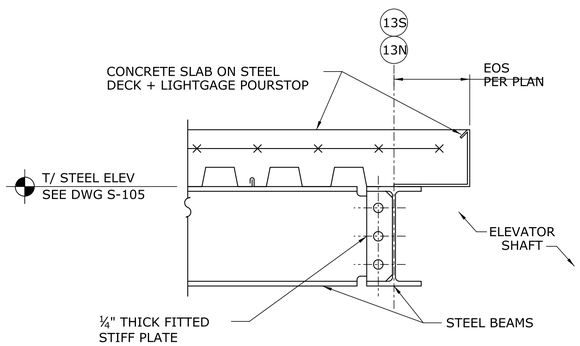

SECTION AT LANDING EDGE OF SLAB — 5 / S-505

SCALE: 1½"=1'-0"

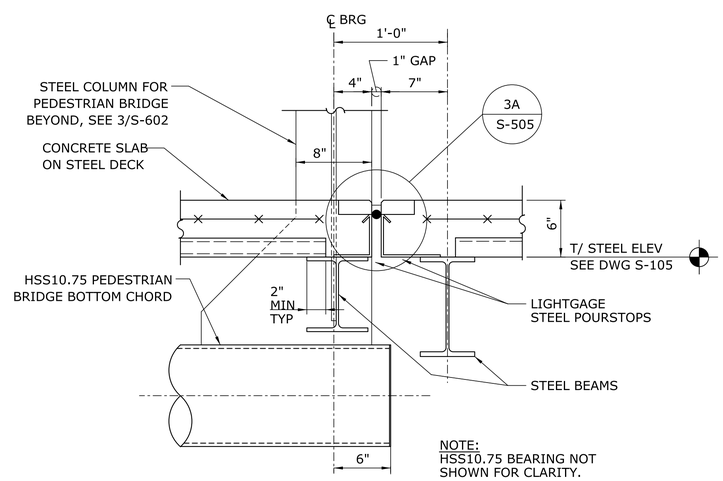

NOTE:
HSS10.75 BEARING NOT SHOWN FOR CLARITY.

PLATFORM AT BRIDGE SECTION — 3 / S-505

SCALE: 1½"=1'-0"

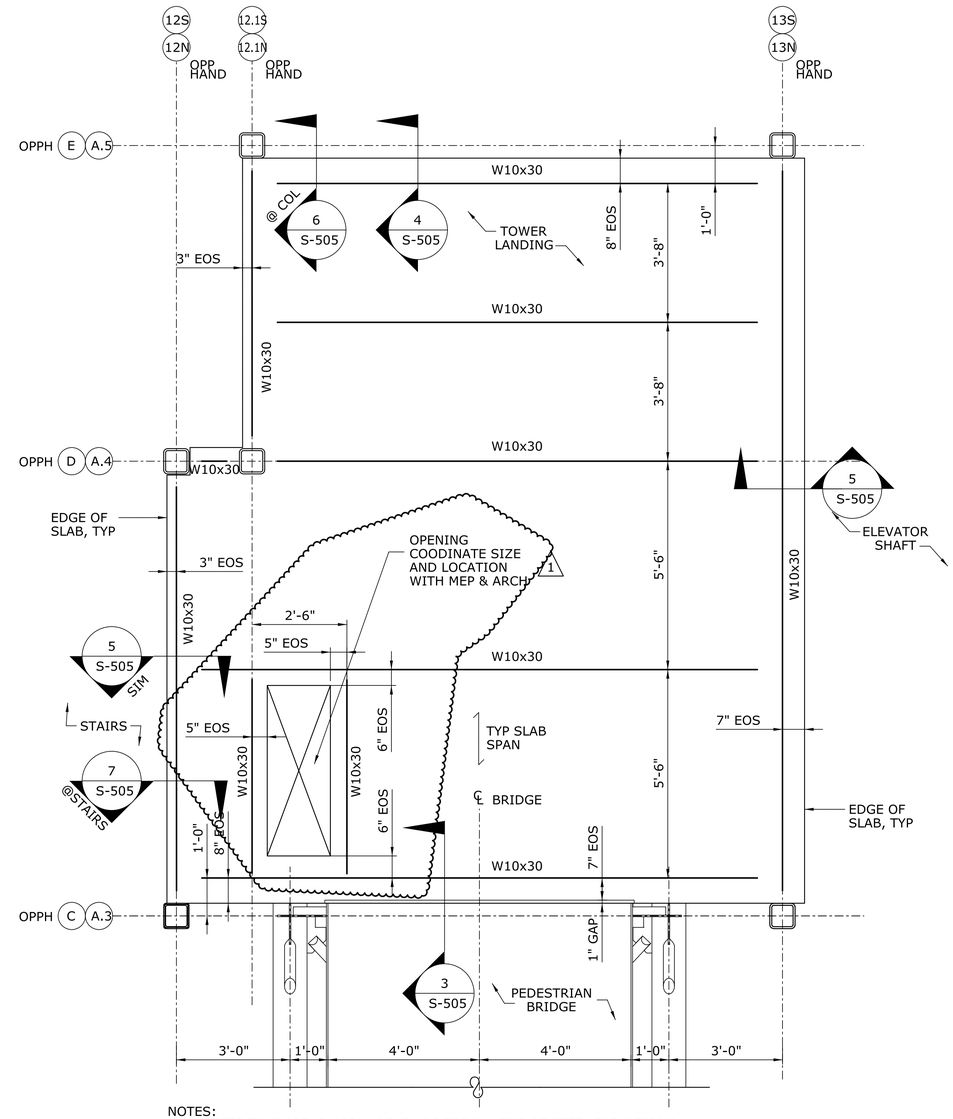

NOTES:
1. REFER TO S-105, S-105A AND S-106 FOR ALL TOP OF STEEL ELEVATIONS.
2. CONCRETE FLOOR SLAB: 2" - 20 GAGE GALV COMPOSIT METAL DECK WITH 4" NORMAL WT CONCRETE REINOFORCED W/ 6x6 - W2.1xW2.1 WWF (6" TOTAL SLAB THICKNESS)

DETAILED PLAN VIEW AT TOWER LANDING AND PEDESTRIAN BRIDGE — 1 / S-505

SCALE: 1/2"=1'-0"

ADDENDUM NO. 1

REV.	DATE	REVISION DESCRIPTION	SHEET NO.
1	8/24/2018	REVISED FRAMING FOR MEP ACCESS	06.33.A1

THE INFORMATION, INCLUDING ESTIMATED QUANTITIES OF WORK, SHOWN ON THESE SHEETS IS BASED ON LIMITED INVESTIGATIONS BY THE STATE AND IS IN NO WAY WARRANTED TO INDICATE THE CONDITIONS OF ACTUAL QUANTITIES OF WORK WHICH WILL BE REQUIRED.

Plotted Date: 8/24/2017

DESIGNER/DRAFTER: MDD/KR-M
CHECKED BY: MDD
SCALE AS NOTED

STATE OF CONNECTICUT
DEPARTMENT OF TRANSPORTATION

Filename: FD_MSH_STR_0027_0059_S-505.dgn

SIGNATURE/BLOCK:
STATE OF CONNECTICUT — NORTH DELEGATION — No. 19078 — LICENSED PROFESSIONAL ENGINEER
Michael Baker INTERNATIONAL
500 ENTERPRISE DRIVE
SUITE 2B
ROCKY HILL, CT. 06067
Phone: (860) 563-3044
MBAKERINTL.COM

PROJECT TITLE:
SHORE LINE EAST RAILROAD STATIONS

TOWN: **CLINTON**

DRAWING TITLE: **TOWER SUPERSTRUCTURE SECTIONS & DETAILS - 5**

PROJECT NO. 310-0059
DRAWING NO. S-505
SHEET NO. 06.33.A1